SECTION EC
ENGINE CONTROL SYSTEM

CONTENTS

VK56DE

BASIC INSPECTION 8

DIAGNOSIS AND REPAIR WORKFLOW 8
Trouble Diagnosis Introduction 8

INSPECTION AND ADJUSTMENT 13
Basic Inspection 13
Idle Speed and Ignition Timing Check 17
Procedure After Replacing ECM 17
VIN Registration 17
Accelerator Pedal Released Position Learning 18
Throttle Valve Closed Position Learning 18
Idle Air Volume Learning 18

FUNCTION DIAGNOSIS 21

ENGINE CONTROL SYSTEM 21
System Diagram 21
Engine Control Component Parts Location 22

MULTIPORT FUEL INJECTION SYSTEM 28
System Description 28

ELECTRIC IGNITION SYSTEM 31
System Description 31

AIR CONDITIONING CUT CONTROL 32
Input/Output Signal Chart 32
System Description 32

AUTOMATIC SPEED CONTROL DEVICE (ASCD) 33
System Description 33
Component Description 34

CAN COMMUNICATION 35
System Description 35

COOLING FAN CONTROL 36
Description 36

EVAPORATIVE EMISSION SYSTEM 37
Description 37

INTAKE VALVE TIMING CONTROL 40
Description 40

ON BOARD DIAGNOSTIC (OBD) SYSTEM 41
Introduction 41
Two Trip Detection Logic 41
Emission-related Diagnostic Information 42
Malfunction Indicator Lamp (MIL) 55
OBD System Operation Chart 58
CONSULT-III Function (ENGINE) 63
Generic Scan Tool (GST) Function 72

COMPONENT DIAGNOSIS 75

TROUBLE DIAGNOSIS - SPECIFICATION VALUE 75
Description 75
Testing Condition 75
Inspection Procedure 75
Diagnosis Procedure 76

POWER SUPPLY AND GROUND CIRCUIT 83
Diagnosis Procedure 83
Ground Inspection 86

U1000, U1001 CAN COMM CIRCUIT 87
Description 87
On Board Diagnosis Logic 87
DTC Confirmation Procedure 87
Diagnosis Procedure 87

U1010 CONTROL UNIT (CAN) 88
Description 88
On Board Diagnosis Logic 88
DTC Confirmation Procedure 88
Diagnosis Procedure 88

P0011, P0021 IVT CONTROL 90
On Board Diagnosis Logic 90

DTC Confirmation Procedure 90
Diagnosis Procedure 91
Component Inspection 95

P0031, P0032, P0051, P0052 A/F SENSOR 1 HEATER 97
Description 97
On Board Diagnosis Logic 97
DTC Confirmation Procedure 97
Diagnosis Procedure 97
Component Inspection 99

P0037, P0038, P0057, P0058 HO2S2 HEATER 100
Description 100
On Board Diagnosis Logic 100
DTC Confirmation Procedure 100
Diagnosis Procedure 101
Component Inspection 102

P0075, P0081 IVT CONTROL SOLENOID VALVE 103
Component Description 103
On Board Diagnosis Logic 103
DTC Confirmation Procedure 103
Diagnosis Procedure 103
Component Inspection 104

P0101 MAF SENSOR 106
Component Description 106
On Board Diagnosis Logic 106
DTC Confirmation Procedure 106
Overall Function Check 108
Diagnosis Procedure 109
Component Inspection 111

P0102, P0103 MAF SENSOR 113
Component Description 113
On Board Diagnosis Logic 113
DTC Confirmation Procedure 113
Diagnosis Procedure 114
Component Inspection 115

P0112, P0113 IAT SENSOR 118
Component Description 118
On Board Diagnosis Logic 118
DTC Confirmation Procedure 118
Diagnosis Procedure 118
Component Inspection 120

P0116 ECT SENSOR 121
Component Description 121
On Board Diagnosis Logic 121
DTC Confirmation Procedure 121
Diagnosis Procedure 122
Component Inspection 122

P0117, P0118 ECT SENSOR 124
Component Description 124
On Board Diagnosis Logic 124
DTC Confirmation Procedure 125
Diagnosis Procedure 125
Component Inspection 126

P0122, P0123 TP SENSOR 128
Component Description 128
On Board Diagnosis Logic 128
DTC Confirmation Procedure 128
Diagnosis Procedure 128
Component Inspection 131

P0125 ECT SENSOR 132
Component Description 132
On Board Diagnosis Logic 132
DTC Confirmation Procedure 132
Diagnosis Procedure 133
Component Inspection 133

P0127 IAT SENSOR 135
Component Description 135
On Board Diagnosis Logic 135
DTC Confirmation Procedure 135
Diagnosis Procedure 136
Component Inspection 136

P0128 THERMOSTAT FUNCTION 138
On Board Diagnosis Logic 138
DTC Confirmation Procedure 138
Diagnosis Procedure 140
Component Inspection 140

P0130, P0150 A/F SENSOR 1 141
Component Description 141
On Board Diagnosis Logic 141
DTC Confirmation Procedure 141
Overall Function Check 142
Diagnosis Procedure 142

P0131, P0151 A/F SENSOR 1 145
Component Description 145
On Board Diagnosis Logic 145
DTC Confirmation Procedure 145
Diagnosis Procedure 146

P0132, P0152 A/F SENSOR 1 149
Component Description 149
On Board Diagnosis Logic 149
DTC Confirmation Procedure 149
Diagnosis Procedure 150

P0133, P0153 A/F SENSOR 1 153
Component Description 153
On Board Diagnosis Logic 153
DTC Confirmation Procedure 153
Diagnosis Procedure 154

P0137, P0157 HO2S2 159
Component Description 159
On Board Diagnosis Logic 159
DTC Confirmation Procedure 159
Overall Function Check 160

Diagnosis Procedure 160
Component Inspection 162

P0138, P0158 HO2S2 164
Component Description 164
On Board Diagnosis Logic 164
DTC Confirmation Procedure 164
Overall Function Check 165
Diagnosis Procedure 166
Component Inspection 169

P0139, P0159 HO2S2 171
Component Description 171
On Board Diagnosis Logic 171
DTC Confirmation Procedure 171
Overall Function Check 172
Diagnosis Procedure 172
Component Inspection 174

P0171, P0174 FUEL INJECTION SYSTEM FUNCTION 176
On Board Diagnosis Logic 176
DTC Confirmation Procedure 176
Diagnosis Procedure 179

P0172, P0175 FUEL INJECTION SYSTEM FUNCTION 182
On Board Diagnosis Logic 182
DTC Confirmation Procedure 182
Diagnosis Procedure 185

P0181 FTT SENSOR 188
Component Description 188
On Board Diagnosis Logic 188
DTC Confirmation Procedure 188
Diagnosis Procedure 189
Component Inspection 190

P0182, P0183 FTT SENSOR 191
Component Description 191
On Board Diagnosis Logic 191
DTC Confirmation Procedure 191
Diagnosis Procedure 191
Component Inspection 193

P0222, P0223 APP SENSOR 194
Component Description 194
On Board Diagnosis Logic 194
DTC Confirmation Procedure 194
Diagnosis Procedure 194
Component Inspection 197

P0300, P0301, P0302, P0303, P0304, P0305, P0306, P0307, P0308 MISFIRE 198
On Board Diagnosis Logic 198
DTC Confirmation Procedure 198
Diagnosis Procedure 199

P0327, P0328, P0332, P0333 KS 204
Component Description 204
On Board Diagnosis Logic 204
DTC Confirmation Procedure 204
Diagnosis Procedure 204
Component Inspection 206

P0335 CKP SENSOR (POS) 207
Component Description 207
On Board Diagnosis Logic 207
DTC Confirmation Procedure 207
Diagnosis Procedure 208
Component Inspection 209

P0340 CMP SENSOR (PHASE) 211
Component Description 211
On Board Diagnosis Logic 211
DTC Confirmation Procedure 211
Diagnosis Procedure 212
Component Inspection 213

P0420, P0430 THREE WAY CATALYST FUNCTION 215
On Board Diagnosis Logic 215
DTC Confirmation Procedure 215
Overall Function Check 216
Diagnosis Procedure 216

P0441 EVAP CONTROL SYSTEM 219
System Description 219
On Board Diagnosis Logic 219
DTC Confirmation Procedure 219
Overall Function Check 220
Diagnosis Procedure 220

P0442 EVAP CONTROL SYSTEM 224
On Board Diagnosis Logic 224
DTC Confirmation Procedure 224
Diagnosis Procedure 225
Component Inspection 230

P0443 EVAP CANISTER PURGE VOLUME CONTROL SOLENOID VALVE 231
Description 231
On Board Diagnosis Logic 231
DTC Confirmation Procedure 231
Diagnosis Procedure 232
Component Inspection 234

P0444, P0445 EVAP CANISTER PURGE VOLUME CONTROL SOLENOID VALVE 236
Description 236
On Board Diagnosis Logic 236
DTC Confirmation Procedure 237
Diagnosis Procedure 237
Component Inspection 238

P0447 EVAP CANISTER VENT CONTROL VALVE 239
Component Description 239
On Board Diagnosis Logic 239
DTC Confirmation Procedure 239
Diagnosis Procedure 239

Component Inspection 241

P0448 EVAP CANISTER VENT CONTROL VALVE 243
Component Description 243
On Board Diagnosis Logic 243
DTC Confirmation Procedure 243
Diagnosis Procedure 244
Component Inspection 245

P0451 EVAP CONTROL SYSTEM PRESSURE SENSOR 247
Component Description 247
On Board Diagnosis Logic 247
DTC Confirmation Procedure 247
Diagnosis Procedure 247
Component Inspection 248

P0452 EVAP CONTROL SYSTEM PRESSURE SENSOR 250
Component Description 250
On Board Diagnosis Logic 250
DTC Confirmation Procedure 250
Diagnosis Procedure 251
Component Inspection 253

P0453 EVAP CONTROL SYSTEM PRESSURE SENSOR 254
Component Description 254
On Board Diagnosis Logic 254
DTC Confirmation Procedure 254
Diagnosis Procedure 255
Component Inspection 258

P0455 EVAP CONTROL SYSTEM 259
On Board Diagnosis Logic 259
DTC Confirmation Procedure 259
Diagnosis Procedure 260
Component Inspection 264

P0456 EVAP CONTROL SYSTEM 266
On Board Diagnosis Logic 266
DTC Confirmation Procedure 267
Overall Function Check 267
Diagnosis Procedure 268
Component Inspection 272

P0460 FUEL LEVEL SENSOR 274
Component Description 274
On Board Diagnosis Logic 274
DTC Confirmation Procedure 274
Diagnosis Procedure 274

P0461 FUEL LEVEL SENSOR 276
Component Description 276
On Board Diagnosis Logic 276
Overall Function Check 276
Diagnosis Procedure 277

P0462, P0463 FUEL LEVEL SENSOR 278
Component Description 278
On Board Diagnosis Logic 278
DTC Confirmation Procedure 278
Diagnosis Procedure 278

P0500 VSS 280
Description 280
On Board Diagnosis Logic 280
DTC Confirmation Procedure 280
Overall Function Check 281
Diagnosis Procedure 281

P0506 ISC SYSTEM 282
Description 282
On Board Diagnosis Logic 282
DTC Confirmation Procedure 282
Diagnosis Procedure 282

P0507 ISC SYSTEM 284
Description 284
On Board Diagnosis Logic 284
DTC Confirmation Procedure 284
Diagnosis Procedure 284

P0550 PSP SENSOR 286
Component Description 286
On Board Diagnosis Logic 286
DTC Confirmation Procedure 286
Diagnosis Procedure 286
Component Inspection 288

P0603 ECM POWER SUPPLY 289
Description 289
DTC Logic 289
Diagnosis Procedure 289

P0605 ECM 291
Component Description 291
On Board Diagnosis Logic 291
DTC Confirmation Procedure 291
Diagnosis Procedure 292

P0643 SENSOR POWER SUPPLY 293
On Board Diagnosis Logic 293
DTC Confirmation Procedure 293
Diagnosis Procedure 293

P0850 PNP SWITCH 296
Component Description 296
On Board Diagnosis Logic 296
DTC Confirmation Procedure 296
Overall Function Check 296
Diagnosis Procedure 297

P1140, P1145 IVT CONTROL POSITION SENSOR 299
Component Description 299
On Board Diagnosis Logic 299
DTC Confirmation Procedure 299
Diagnosis Procedure 299
Component Inspection 302

P1148, P1168 CLOSED LOOP CONTROL 303
On Board Diagnosis Logic 303

P1211 TCS CONTROL UNIT 304
Description 304
On Board Diagnosis Logic 304
DTC Confirmation Procedure 304
Diagnosis Procedure 304

P1212 TCS COMMUNICATION LINE 305
Description 305
On Board Diagnosis Logic 305
DTC Confirmation Procedure 305
Diagnosis Procedure 305

P1217 ENGINE OVER TEMPERATURE 306
On Board Diagnosis Logic 306
Overall Function Check 306
Diagnosis Procedure 307
Main 13 Causes of Overheating 308

P1225 TP SENSOR 310
Component Description 310
On Board Diagnosis Logic 310
DTC Confirmation Procedure 310
Diagnosis Procedure 310

P1226 TP SENSOR 312
Component Description 312
On Board Diagnosis Logic 312
DTC Confirmation Procedure 312
Diagnosis Procedure 312

P1421 COLD START CONTROL 314
Description 314
On Board Diagnosis Logic 314
DTC Confirmation Procedure 314
Diagnosis Procedure 314

P1550 BATTERY CURRENT SENSOR 316
Component Description 316
On Board Diagnosis Logic 316
DTC Confirmation Procedure 316
Diagnosis Procedure 316
Component Inspection 318

P1551, P1552 BATTERY CURRENT SENSOR 320
Component Description 320
On Board Diagnosis Logic 320
DTC Confirmation Procedure 320
Diagnosis Procedure 320
Component Inspection 322

P1553 BATTERY CURRENT SENSOR 324
Component Description 324
On Board Diagnosis Logic 324
DTC Confirmation Procedure 324
Diagnosis Procedure 324
Component Inspection 326

P1554 BATTERY CURRENT SENSOR 328
Component Description 328
On Board Diagnosis Logic 328
Overall Function Check 328
Diagnosis Procedure 329
Component Inspection 330

P1564 ICC STEERING SWITCH 332
Component Description 332
On Board Diagnosis Logic 332
DTC Confirmation Procedure 332
Diagnosis Procedure 332
Component Inspection 335

P1564 ASCD STEERING SWITCH 336
Component Description 336
On Board Diagnosis Logic 336
DTC Confirmation Procedure 336
Diagnosis Procedure 336
Component Inspection 338

P1568 ICC FUNCTION 340
On Board Diagnosis Logic 340
DTC Confirmation Procedure 340
Diagnosis Procedure 340

P1572 ICC BRAKE SWITCH 341
Component Description 341
On Board Diagnosis Logic 341
DTC Confirmation Procedure 341
Diagnosis Procedure 342
Component Inspection 346

P1572 ASCD BRAKE SWITCH 347
Component Description 347
On Board Diagnosis Logic 347
DTC Confirmation Procedure 347
Diagnosis Procedure 348
Component Inspection 351

P1574 ICC VEHICLE SPEED SENSOR 352
Component Description 352
On Board Diagnosis Logic 352
DTC Confirmation Procedure 352
Diagnosis Procedure 352

P1574 ASCD VEHICLE SPEED SENSOR 354
Component Description 354
On Board Diagnosis Logic 354
DTC Confirmation Procedure 354
Diagnosis Procedure 354

P1805 BRAKE SWITCH 356
Description 356
On Board Diagnosis Logic 356
DTC Confirmation Procedure 356
Diagnosis Procedure 356
Component Inspection 358

P2100, P2103 THROTTLE CONTROL MOTOR RELAY 359

Component Description 359
On Board Diagnosis Logic 359
DTC Confirmation Procedure 359
Diagnosis Procedure 360

P2101 ELECTRIC THROTTLE CONTROL FUNCTION 362
Description 362
On Board Diagnosis Logic 362
DTC Confirmation Procedure 362
Diagnosis Procedure 362
Component Inspection 365

P2118 THROTTLE CONTROL MOTOR 366
Component Description 366
On Board Diagnosis Logic 366
DTC Confirmation Procedure 366
Diagnosis Procedure 366
Component Inspection 367

P2119 ELECTRIC THROTTLE CONTROL ACTUATOR 368
Component Description 368
On Board Diagnosis Logic 368
DTC Confirmation Procedure 368
Diagnosis Procedure 369

P2122, P2123 APP SENSOR 370
Component Description 370
On Board Diagnosis Logic 370
DTC Confirmation Procedure 370
Diagnosis Procedure 371
Component Inspection 372

P2127, P2128 APP SENSOR 373
Component Description 373
On Board Diagnosis Logic 373
DTC Confirmation Procedure 373
Diagnosis Procedure 373
Component Inspection 376

P2135 TP SENSOR 377
Component Description 377
On Board Diagnosis Logic 377
DTC Confirmation Procedure 377
Diagnosis Procedure 377
Component Inspection 380

P2138 APP SENSOR 381
Component Description 381
On Board Diagnosis Logic 381
DTC Confirmation Procedure 381
Diagnosis Procedure 382
Component Inspection 384

P2A00, P2A03 A/F SENSOR 1 385
Component Description 385
On Board Diagnosis Logic 385
DTC Confirmation Procedure 385
Diagnosis Procedure 386

ASCD BRAKE SWITCH 390
Component Description 390
Diagnosis Procedure 390
Component Inspection 393

ASCD INDICATOR 394
Component Description 394
Diagnosis Procedure 394

COOLING FAN 395
Diagnosis Procedure 395
Component Inspection 395

ELECTRICAL LOAD SIGNAL 397
Description 397
Diagnosis Procedure 397

FUEL INJECTOR 399
Component Description 399
Diagnosis Procedure 399
Component Inspection 401

FUEL PUMP 402
Description 402
Diagnosis Procedure 402
Component Inspection 405

ICC BRAKE SWITCH 406
Component Description 406
Diagnosis Procedure 406
Component Inspection 409

IGNITION SIGNAL 411
Component Description 411
Diagnosis Procedure 411
Component Inspection 414

ON BOARD REFUELING VAPOR RECOVERY (ORVR) 416
System Description 416
Diagnosis Procedure 416
Component Inspection 418

POSITIVE CRANKCASE VENTILATION 421
Description 421
Component Inspection 421

REFRIGERANT PRESSURE SENSOR 423
Component Description 423
Diagnosis Procedure 423

ECU DIAGNOSIS 426

ECM 426
CONSULT-III Reference Value in Data Monitor Mode 426
ECM Harness Connector Terminal Layout 429
ECM Terminal and Reference Value 429
Wiring Diagram - ENGINE CONTROL SYSTEM -. 439
Fail-Safe Chart 459
DTC Inspection Priority Chart 461

DTC Index 462
Emission-related Diagnostic Information 466

SYMPTOM DIAGNOSIS 481

ENGINE CONTROL SYSTEM SYMPTOMS ... 481
Symptom Matrix Chart 481

NORMAL OPERATING CONDITION 485
Fuel Cut Control (at No Load and High Engine Speed) 485

PRECAUTION 486

PRECAUTIONS 486
Precaution for Supplemental Restraint System (SRS) "AIR BAG" and "SEAT BELT PRE-TENSIONER" 486
Precaution Necessary for Steering Wheel Rotation After Battery Disconnect 486
On Board Diagnosis (OBD) System of Engine and A/T 487
Precaution 487

PREPARATION 491

PREPARATION 491
Special Service Tool 491
Commercial Service Tool 492

ON-VEHICLE MAINTENANCE 494

FUEL PRESSURE 494
Fuel Pressure Check 494

EVAP LEAK CHECK 496
How to Detect Fuel Vapor Leakage 496

ON-VEHICLE REPAIR 498

EVAP CANISTER 498
Component Inspection 498
Removal and Installation 498

INTAKE VALVE TIMING CONTROL 500
Intake Valve Timing Control Solenoid Valve (LH) .. 500
Intake Valve Timing Control Solenoid Valve (RH) .. 500
Intake Valve Timing Control Position Sensor (LH) . 501
Intake Valve Timing Control Position Sensor (RH) . 501
Camshaft Position Sensor (PHASE) 501

SERVICE DATA AND SPECIFICATIONS (SDS) 503

SERVICE DATA AND SPECIFICATIONS (SDS) 503
Fuel Pressure 503
Idle Speed and Ignition Timing 503
Calculated Load Value 503
Mass Air Flow Sensor 503
Intake Air Temperature Sensor 503
Engine Coolant Temperature Sensor 503
A/F Sensor 1 Heater 503
Heated Oxygen sensor 2 Heater 504
Crankshaft Position Sensor (POS) 504
Camshaft Position Sensor (PHASE) 504
Throttle Control Motor 504
Fuel Injector 504
Fuel Pump 504

BASIC INSPECTION

DIAGNOSIS AND REPAIR WORKFLOW

Trouble Diagnosis Introduction

INFOID:0000000001351337

INTRODUCTION

The engine has an ECM to control major systems such as fuel control, ignition control, idle air control system, etc. The ECM accepts input signals from sensors and instantly drives actuators. It is essential that both input and output signals are proper and stable. At the same time, it is important that there are no malfunctions such as vacuum leaks, fouled spark plugs, or other malfunctions with the engine.

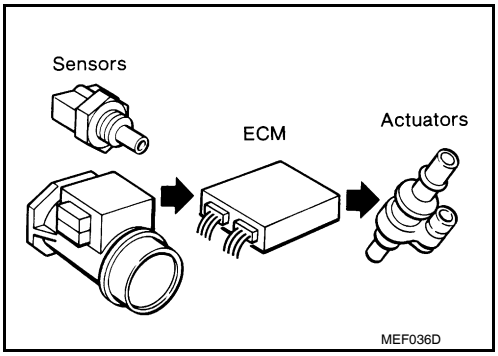

It is much more difficult to diagnose an incident that occurs intermittently rather than continuously. Most intermittent incidents are caused by poor electric connections or improper wiring. In this case, careful checking of suspected circuits may help prevent the replacement of good parts.

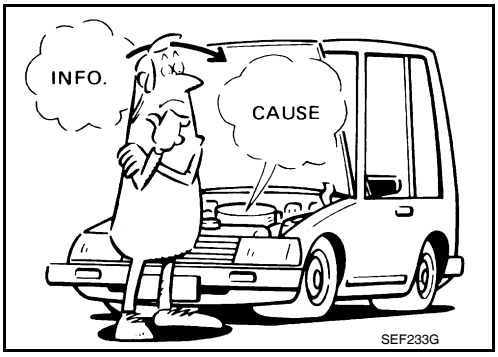

A visual check only may not find the cause of the incidents. A road test with CONSULT-III (or GST) or a circuit tester connected should be performed. Follow the Work Flow on "WORK FLOW" .
Before undertaking actual checks, take a few minutes to talk with a customer who approaches with a driveability complaint. The customer can supply good information about such incidents, especially intermittent ones. Find out what symptoms are present and under what conditions they occur. A Diagnostic Worksheet like the example on "Worksheet Sample" should be used.
Start your diagnosis by looking for conventional malfunctions first. This will help troubleshoot driveability malfunctions on an electronically controlled engine vehicle.

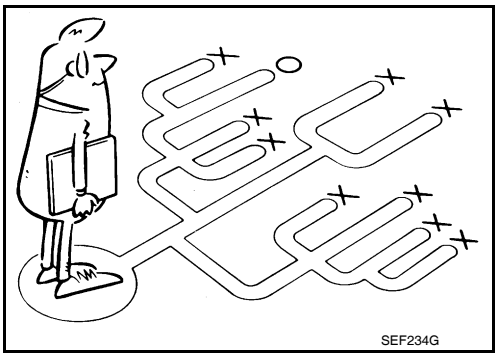

WORK FLOW

Overall Sequence

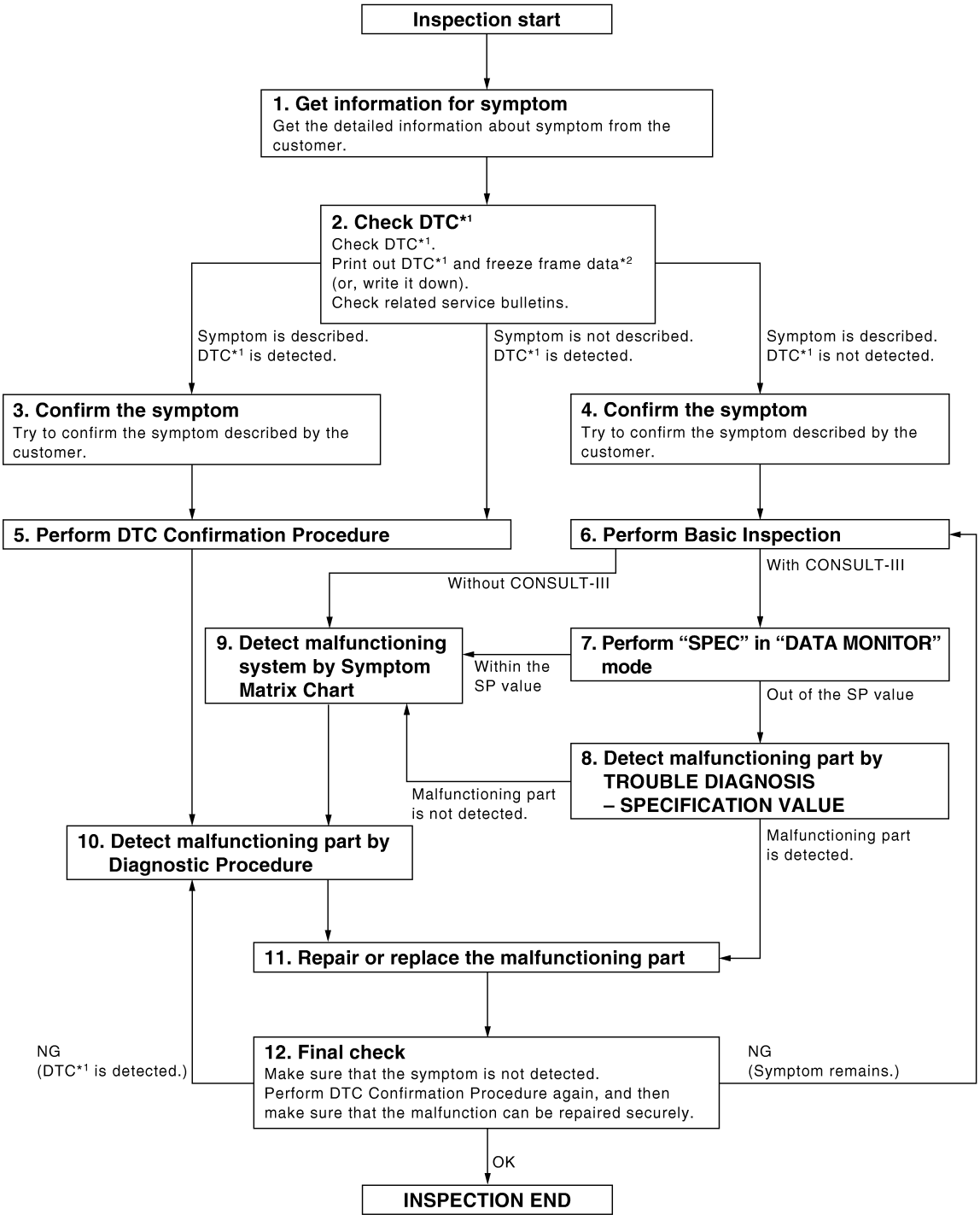

Detailed Flow

1. GET INFORMATION FOR SYMPTOM

Get the detailed information from the customer about the symptom (the condition and the environment when the incident/malfunction occurred) using the "Worksheet Sample" .

>> GO TO 2.

2. CHECK DTC*1

1. Check DTC*1 .
2. Perform the following procedure if DTC*1 is displayed.
- Record DTC*1 and freeze frame data*2 . (Print them out with CONSULT-III or GST.)
- Erase DTC*1 . (Refer to EC-462, "DTC Index" .)
- Study the relationship between the cause detected by DTC*1 and the symptom described by the customer. (Symptom Matrix Chart is useful. Refer to EC-481, "Symptom Matrix Chart" .)
3. Check related service bulletins for information.

Is any symptom described and any DTC detected?

Symptom is described, DTC*1 is displayed>>GO TO 3.
Symptom is described, DTC*1 is not displayed>>GO TO 4.
Symptom is not described, DTC*1 is displayed>>GO TO 5.

3. CONFIRM THE SYMPTOM

Try to confirm the symptom described by the customer (except MIL ON).
DIAGNOSIS WORK SHEET is useful to verify the incident.
Connect CONSULT-III to the vehicle and check real time diagnosis results.
Verify relation between the symptom and the condition when the symptom is detected.

>> GO TO 5.

4. CONFIRM THE SYMPTOM

Try to confirm the symptom described by the customer.
DIAGNOSIS WORK SHEET is useful to verify the incident.
Connect CONSULT-III to the vehicle and check real time diagnosis results.
Verify relation between the symptom and the condition when the symptom is detected.

>> GO TO 6.

5. PERFORM DTC CONFIRMATION PROCEDURE

Perform DTC Confirmation Procedure for the displayed DTC* , and then make sure that DTC*1 is detected again.

If two or more DTCs*1 are detected, refer to EC-461, "DTC Inspection Priority Chart" and determine trouble diagnosis order.

NOTE:

- Freeze frame data*2 is useful if the DTC*1 is not detected.
- Perform Overall Function Check if DTC Confirmation Procedure is not included on Service Manual. This simplified check procedure is an effective alternative though DTC*1 cannot be detected during this check.
  If the result of Overall Function Check is NG, it is the same as the detection of DTC*1 by DTC Confirmation Procedure.

Is DTC*1 detected?

Yes >> GO TO 10.
No >> Check according to GI-38, "Intermittent Incident" .

6. PERFORM BASIC INSPECTION

Perform EC-13, "Basic Inspection" .

With CONSULT-III>>GO TO 7.
Without CONSULT-III>>GO TO 9.

7. PERFORM SPEC IN DATA MONITOR MODE

With CONSULT-III
Make sure that “MAS A/F SE-B1”, “B/FUEL SCHDL”, and “A/F ALPHA-B1”, “A/F ALPHA-B2” are within the SP value using CONSULT-III “SPEC” in “DATA MONITOR” mode. Refer to EC-75.

Are they within the SP value?

Yes >> GO TO 9.
No >> GO TO 8.

8. DETECT MALFUNCTIONING PART BY TROUBLE DIAGNOSIS - SPECIFICATION VALUE

Detect malfunctioning part according to EC-76, "Diagnosis Procedure".

Is malfunctioning part detected?

Yes >> GO TO 11.
No >> GO TO 9.

9. DETECT MALFUNCTIONING SYSTEM BY SYMPTOM MATRIX CHART

Detect malfunctioning system according to EC-481, "Symptom Matrix Chart" based on the confirmed symptom in step 4, and determine the trouble diagnosis order based on possible causes and symptom.

>> GO TO 10.

10. DETECT MALFUNCTIONING PART BY DIAGNOSTIC PROCEDURE

Inspect according to Diagnostic Procedure of the system.

NOTE:

The Diagnostic Procedure in EC section described based on open circuit inspection. A short circuit inspection is also required for the circuit check in the Diagnostic Procedure. For details, refer to Circuit Inspection in GI-34, "Work Flow".

Is malfunctioning part detected?

Yes >> GO TO 11.
No >> Monitor input data from related sensors or check voltage of related ECM terminals using CONSULT-III. Refer to EC-429, "ECM Terminal and Reference Value", EC-426, "CONSULT-III Reference Value in Data Monitor Mode".

11. REPAIR OR REPLACE THE MALFUNCTIONING PART

1. Repair or replace the malfunctioning part.
2. Reconnect parts or connectors disconnected during Diagnostic Procedure again after repair and replacement.
3. Check DTC. If DTC is displayed, erase it, refer to EC-462, "DTC Index".

>> GO TO 12.

12. FINAL CHECK

When DTC was detected in step 2, perform DTC Confirmation Procedure or Overall Function Check again, and then make sure that the malfunction have been repaired securely.

When symptom was described from the customer, refer to confirmed symptom in step 3 or 4, and make sure that the symptom is not detected.

OK or NG

NG (DTC*1 is detected)>>GO TO 10.
NG (Symptom remains)>>GO TO 6.
OK >> 1. Before returning the vehicle to the customer, make sure to erase unnecessary DTC*1 in ECM and TCM (Transmission Control Module). (Refer to EC-462, "DTC Index" and TM-30, "OBD-II Diagnostic Trouble Code (DTC)".)
2. If the completion of SRT is needed, drive vehicle under the specific driving pattern. Refer to EC-462, "DTC Index".
3. **INSPECTION END**

*1: Include 1st trip DTC.
*2: Include 1st trip freeze frame data.

DIAGNOSTIC WORKSHEET

Description

There are many operating conditions that lead to the malfunction of engine components. A good grasp of such conditions can make troubleshooting faster and more accurate.
In general, each customer feels differently about a incident. It is important to fully understand the symptoms or conditions for a customer complaint.
Utilize a diagnostic worksheet like the one on the next page in order to organize all the information for troubleshooting.
Some conditions may cause the MIL to come on steady or blink and DTC to be detected. Examples:

- Vehicle ran out of fuel, which caused the engine to misfire.
- Fuel filler cap was left off or incorrectly screwed on, allowing fuel to evaporate into the atmosphere.

KEY POINTS

WHAT ..... Vehicle & engine model
WHEN ..... Date, Frequencies
WHERE..... Road conditions
HOW ..... Operating conditions, Weather conditions, Symptoms

SEF907L

Worksheet Sample

Customer name MR/MS		Model & Year	VIN
Engine #		Trans.	Mileage
Incident Date		Manuf. Date	In Service Date
Fuel and fuel filler cap		☐ Vehicle ran out of fuel causing misfire ☐ Fuel filler cap was left off or incorrectly screwed on.	
Symptoms	☐ Startability	☐ Impossible to start ☐ No combustion ☐ Partial combustion ☐ Partial combustion affected by throttle position ☐ Partial combustion NOT affected by throttle position ☐ Possible but hard to start ☐ Others [ ]	
	☐ Idling	☐ No fast idle ☐ Unstable ☐ High idle ☐ Low idle ☐ Others [ ]	
	☐ Driveability	☐ Stumble ☐ Surge ☐ Knock ☐ Lack of power ☐ Intake backfire ☐ Exhaust backfire ☐ Others [ ]	
	☐ Engine stall	☐ At the time of start ☐ While idling ☐ While accelerating ☐ While decelerating ☐ Just after stopping ☐ While loading	
Incident occurrence		☐ Just after delivery ☐ Recently ☐ In the morning ☐ At night ☐ In the daytime	
Frequency		☐ All the time ☐ Under certain conditions ☐ Sometimes	
Weather conditions		☐ Not affected	
	Weather	☐ Fine ☐ Raining ☐ Snowing ☐ Others [ ]	
	Temperature	☐ Hot ☐ Warm ☐ Cool ☐ Cold ☐ Humid °F	
Engine conditions		☐ Cold ☐ During warm-up ☐ After warm-up Engine speed 0 2,000 4,000 6,000 8,000 rpm	
Road conditions		☐ In town ☐ In suburbs ☐ Highway ☐ Off road (up/down)	
Driving conditions		☐ Not affected ☐ At starting ☐ While idling ☐ At racing ☐ While accelerating ☐ While cruising ☐ While decelerating ☐ While turning (RH/LH) Vehicle speed 0 10 20 30 40 50 60 MPH	
Malfunction indicator lamp		☐ Turned on ☐ Not turned on	

MTBL0017

INSPECTION AND ADJUSTMENT

Basic Inspection

INFOID:0000000001351329

1. INSPECTION START

1. Check service records for any recent repairs that may indicate a related malfunction, or a current need for scheduled maintenance.
2. Open engine hood and check the following:
- Harness connectors for improper connections
- Wiring harness for improper connections, pinches and cut
- Vacuum hoses for splits, kinks and improper connections
- Hoses and ducts for leaks
- Air cleaner clogging
- Gasket
3. Confirm that electrical or mechanical loads are not applied.
- Headlamp switch is OFF.
- Air conditioner switch is OFF.
- Rear window defogger switch is OFF.
- Steering wheel is in the straight-ahead position, etc.
4. Start engine and warm it up until engine coolant temperature indicator points the middle of gauge.
   Ensure engine stays below 1,000 rpm.

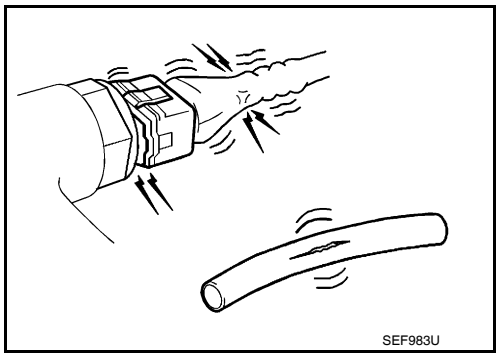

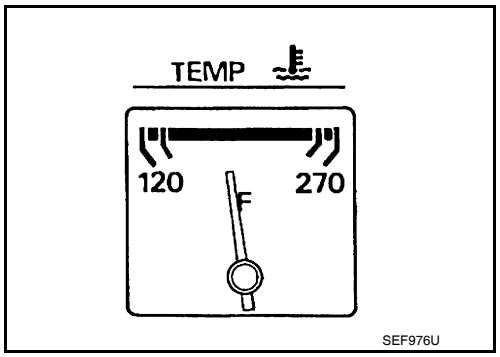

5. Run engine at about 2,000 rpm for about 2 minutes under no load.
6. Make sure that no DTC is displayed with CONSULT-III or GST.

OK or NG

OK >> GO TO 3.
NG >> GO TO 2.

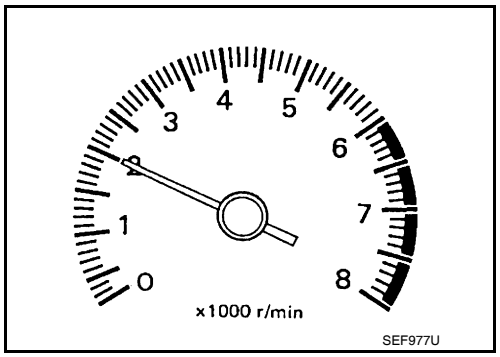

2. REPAIR OR REPLACE

Repair or replace components as necessary according to corresponding Diagnostic Procedure.

>> GO TO 3.

3. CHECK TARGET IDLE SPEED

With CONSULT-III

1. Run engine at about 2,000 rpm for about 2 minutes under no load.

2. Rev engine (2,000 to 3,000 rpm) two or three times under no load, then run engine at idle speed for about 1 minute.

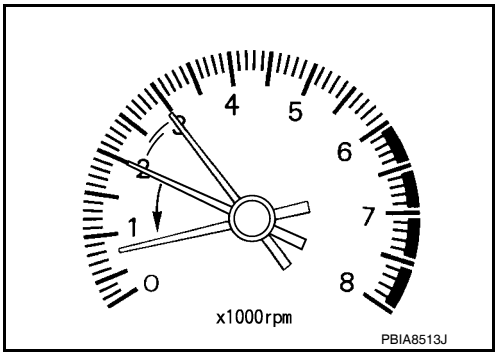

3. Read idle speed in “DATA MONITOR” mode with CONSULT-III. Refer to EC-17, "Idle Speed and Ignition Timing Check" .

650 ± 50 rpm (in P or N position)

Without CONSULT-III

1. Run engine at about 2,000 rpm for about 2 minutes under no load.
2. Rev engine (2,000 to 3,000 rpm) two or three times under no load, then run engine at idle speed for about 1 minute.
3. Check idle speed.
   Refer to EC-17, "Idle Speed and Ignition Timing Check" .

650 ± 50 rpm (in P or N position)

OK or NG

OK >> GO TO 10.
NG >> GO TO 4.

4. PERFORM ACCELERATOR PEDAL RELEASED POSITION LEARNING

1. Stop engine.
2. Perform EC-18, "Accelerator Pedal Released Position Learning" .

>> GO TO 5.

5. PERFORM THROTTLE VALVE CLOSED POSITION LEARNING

Perform EC-18, "Throttle Valve Closed Position Learning" .

>> GO TO 6.

6. PERFORM IDLE AIR VOLUME LEARNING

Refer to EC-18, "Idle Air Volume Learning" .

Is Idle Air Volume Learning carried out successfully?

Yes or No

Yes >> GO TO 7.
No >> 1. Follow the instruction of Idle Air Volume Learning.
2. GO TO 4.

7. CHECK TARGET IDLE SPEED AGAIN

With CONSULT-III

1. Start engine and warm it up to normal operating temperature.
2. Read idle speed in “DATA MONITOR” mode with CONSULT-III.
   Refer to EC-17, "Idle Speed and Ignition Timing Check" .

650 ± 50 rpm (in P or N position)

Without CONSULT-III

1. Start engine and warm it up to normal operating temperature.
2. Check idle speed.
   Refer to EC-17, "Idle Speed and Ignition Timing Check" .

650 ± 50 rpm (in P or N position)

OK or NG

OK >> GO TO 10.
NG >> GO TO 8.

8. DETECT MALFUNCTIONING PART

Check the following.
- Check camshaft position sensor (PHASE) and circuit. Refer to EC-211 .
- Check crankshaft position sensor (POS) and circuit. Refer to EC-207 .

OK or NG

OK >> GO TO 9.
NG >> 1. Repair or replace.
2. GO TO 4.

9. CHECK ECM FUNCTION

1. Substitute another known-good ECM to check ECM function. (ECM may be the cause of an incident, but this is a rare case.)
2. Perform initialization of IVIS (NATS) system and registration of all IVIS (NATS) ignition key IDs. Refer to SEC-13, "System Diagram".

>> GO TO 4.

10. CHECK IGNITION TIMING

1. Run engine at idle.
2. Check ignition timing with a timing light.
   Refer to EC-17, "Idle Speed and Ignition Timing Check" .

15 ± 5° BTDC (in P or N position)

OK or NG

OK >> GO TO 19.
NG >> GO TO 11.

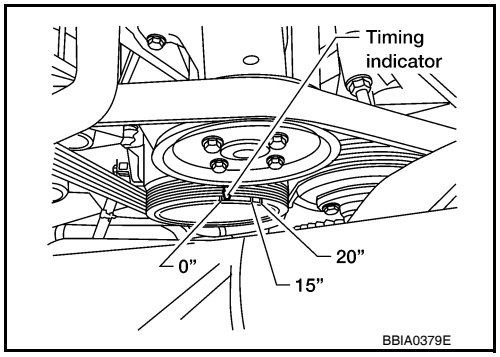

11. PERFORM ACCELERATOR PEDAL RELEASED POSITION LEARNING

1. Stop engine.
2. Perform EC-18, "Accelerator Pedal Released Position Learning" .

>> GO TO 12.

12. PERFORM THROTTLE VALVE CLOSED POSITION LEARNING

Perform EC-18, "Throttle Valve Closed Position Learning" .

>> GO TO 13.

13. PERFORM IDLE AIR VOLUME LEARNING

Refer to EC-18, "Idle Air Volume Learning" .
Is Idle Air Volume Learning carried out successfully?

Yes or No

Yes >> GO TO 14.
No >> 1. Follow the instruction of Idle Air Volume Learning.

2. GO TO 4.

14. CHECK TARGET IDLE SPEED AGAIN

With CONSULT-III

1. Start engine and warm it up to normal operating temperature.
2. Read idle speed in “DATA MONITOR” mode with CONSULT-III.
   Refer to EC-17, "Idle Speed and Ignition Timing Check" .

650 ± 50 rpm (in P or N position)

Without CONSULT-III

1. Start engine and warm it up to normal operating temperature.
2. Check idle speed.
   Refer to EC-17, "Idle Speed and Ignition Timing Check" .

650 ± 50 rpm (in P or N position)

OK or NG

OK >> GO TO 15.
NG >> GO TO 17.

15. CHECK IGNITION TIMING AGAIN

1. Run engine at idle.
2. Check ignition timing with a timing light.
   Refer to EC-17, "Idle Speed and Ignition Timing Check" .

15 ± 5° BTDC (in P or N position)

OK or NG

OK >> GO TO 19.
NG >> GO TO 16.

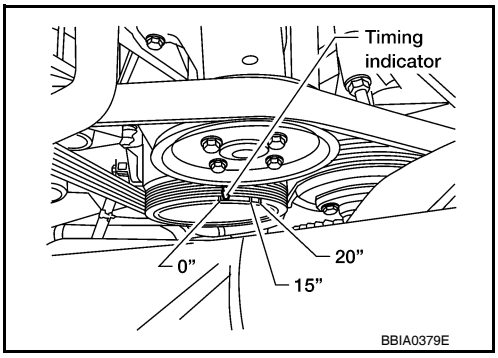

16. CHECK TIMING CHAIN INSTALLATION

Check timing chain installation. Refer to EM-45, "Removal and Installation".

OK or NG

OK >> GO TO 17.
NG >> 1. Repair the timing chain installation.
2. GO TO 4.

17. DETECT MALFUNCTIONING PART

Check the following.

- Check camshaft position sensor (PHASE) and circuit. Refer to EC-211 .
- Check crankshaft position sensor (POS) and circuit. Refer to EC-207 .

OK or NG

OK >> GO TO 18.
NG >> 1. Repair or replace.
2. GO TO 4.

18. CHECK ECM FUNCTION

1. Substitute another known-good ECM to check ECM function. (ECM may be the cause of an incident, but this is a rare case.)
2. Perform initialization of IVIS (NATS) system and registration of all IVIS (NATS) ignition key IDs. Refer to SEC-13, "System Diagram".

>> GO TO 4.

19. INSPECTION END

Did you replace ECM, referring this Basic Inspection procedure?

Yes or No

Yes >> 1. Perform EC-17, "VIN Registration" .
2. **INSPECTION END**

No >> **INSPECTION END**

Idle Speed and Ignition Timing Check

INFOID:0000000001351330

IDLE SPEED

With CONSULT-III

Check idle speed in “DATA MONITOR” mode with CONSULT-III.

With GST

Check idle speed with GST.

IGNITION TIMING

1. Attach timing light to loop wire as shown.

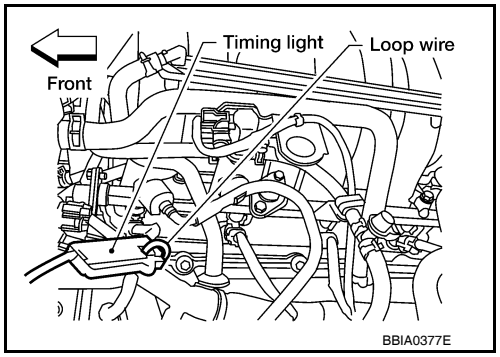

2. Check ignition timing.

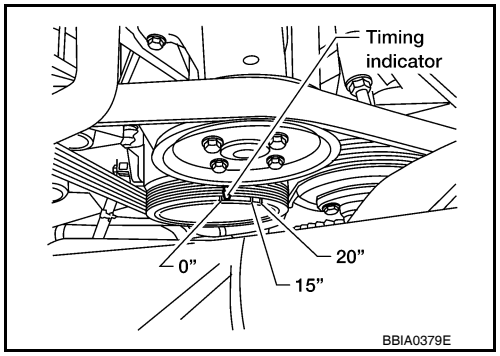

Procedure After Replacing ECM

INFOID:0000000001351331

When replacing ECM, the following procedure must be performed.

1. Perform initialization of IVIS (NATS) system and registration of all IVIS (NATS) ignition key IDs. Refer to SEC-13, "System Diagram".
2. Perform EC-17, "VIN Registration".
3. Perform EC-18, "Accelerator Pedal Released Position Learning".
4. Perform EC-18, "Throttle Valve Closed Position Learning".
5. Perform EC-18, "Idle Air Volume Learning".

VIN Registration

INFOID:0000000001351332

DESCRIPTION

VIN Registration is an operation to registering VIN in ECM. It must be performed each time ECM is replaced.

NOTE:

Accurate VIN which is registered in ECM may be required for Inspection & Maintenance (I/M).

OPERATION PROCEDURE

With CONSULT-III

1. Check the VIN of the vehicle and note it. Refer to GI-20, "Model Variation".
2. Turn ignition switch ON and engine stopped.
3. Select “VIN REGISTRATION” in “WORK SUPPORT” mode.
4. Follow the instruction of CONSULT-III display.

Accelerator Pedal Released Position Learning

INFOID:0000000001351333

DESCRIPTION

Accelerator Pedal Released Position Learning is an operation to learn the fully released position of the accelerator pedal by monitoring the accelerator pedal position sensor output signal. It must be performed each time harness connector of accelerator pedal position sensor or ECM is disconnected.

OPERATION PROCEDURE

1. Make sure that accelerator pedal is fully released.
2. Turn ignition switch ON and wait at least 2 seconds.
3. Turn ignition switch OFF and wait at least 10 seconds.
4. Turn ignition switch ON and wait at least 2 seconds.
5. Turn ignition switch OFF and wait at least 10 seconds.

Throttle Valve Closed Position Learning

INFOID:0000000001351334

DESCRIPTION

Throttle Valve Closed Position Learning is an operation to learn the fully closed position of the throttle valve by monitoring the throttle position sensor output signal. It must be performed each time harness connector of electric throttle control actuator or ECM is disconnected.

OPERATION PROCEDURE

1. Make sure that accelerator pedal is fully released.
2. Turn ignition switch ON.
3. Turn ignition switch OFF wait at least 10 seconds.
   Make sure that throttle valve moves during above 10 seconds by confirming the operating sound.

Idle Air Volume Learning

INFOID:0000000001351335

DESCRIPTION

Idle Air Volume Learning is an operation to learn the idle air volume that keeps each engine within the specific range. It must be performed under any of the following conditions:

- Each time electric throttle control actuator or ECM is replaced.
- Idle speed or ignition timing is out of specification.

PREPARATION

Before performing Idle Air Volume Learning, make sure that all of the following conditions are satisfied.
Learning will be cancelled if any of the following conditions are missed for even a moment.

- Battery voltage: More than 12.9V (At idle)
- Engine coolant temperature: 70 - 100°C (158 - 212°F)
- Selector lever: P or N
- Electric load switch: OFF
  (Air conditioner, headlamp, rear window defogger)
  On vehicles equipped with daytime light systems, if the parking brake is applied before the engine is start the headlamp will not be illuminated.
- Steering wheel: Neutral (Straight-ahead position)
- Vehicle speed: Stopped
- Transmission: Warmed-up

- With CONSULT-III: Drive vehicle until “ATF TEMP SE 1” in “DATA MONITOR” mode of “A/T” system indicates less than 0.9V.
- Without CONSULT-III: Drive vehicle for 10 minutes.

OPERATION PROCEDURE

With CONSULT-III

1. Perform EC-18, "Accelerator Pedal Released Position Learning" .
2. Perform EC-18, "Throttle Valve Closed Position Learning" .
3. Start engine and warm it up to normal operating temperature.
4. Check that all items listed under the topic PREPARATION (previously mentioned) are in good order.
5. Select “IDLE AIR VOL LEARN” in “WORK SUPPORT” mode.
6. Touch “START” and wait 20 seconds.
7. Make sure that “CMPLT” is displayed on CONSULT-III screen. If “CMPLT” is not displayed, Idle Air Volume Learning will not be carried out successfully. In this case, find the cause of the incident by referring to the DIAGNOSTIC PROCEDURE below.
8. Rev up the engine two or three times and make sure that idle speed and ignition timing are within the specifications.

ITEM	SPECIFICATION
Idle speed	650 ± 50 rpm (in P or N position)
Ignition timing	15 ± 5° BTDC (in P or N position)

Without CONSULT-III

NOTE:
- **It is better to count the time accurately with a clock.**
- **It is impossible to switch the diagnostic mode when an accelerator pedal position sensor circuit has a malfunction.**

1. Perform EC-18, "Accelerator Pedal Released Position Learning" .
2. Perform EC-18, "Throttle Valve Closed Position Learning" .
3. Start engine and warm it up to normal operating temperature.
4. Check that all items listed under the topic PREPARATION (previously mentioned) are in good order.
5. Turn ignition switch OFF and wait at least 10 seconds.
6. Confirm that accelerator pedal is fully released, turn ignition switch ON and wait 3 seconds.
7. Repeat the following procedure quickly five times within 5 seconds.

a. Fully depress the accelerator pedal.
b. Fully release the accelerator pedal.

8. Wait 7 seconds, fully depress the accelerator pedal and keep it for approx. 20 seconds until the MIL stops blinking and turned ON.
9. Fully release the accelerator pedal within 3 seconds after the MIL turned ON.
10. Start engine and let it idle.
11. Wait 20 seconds.

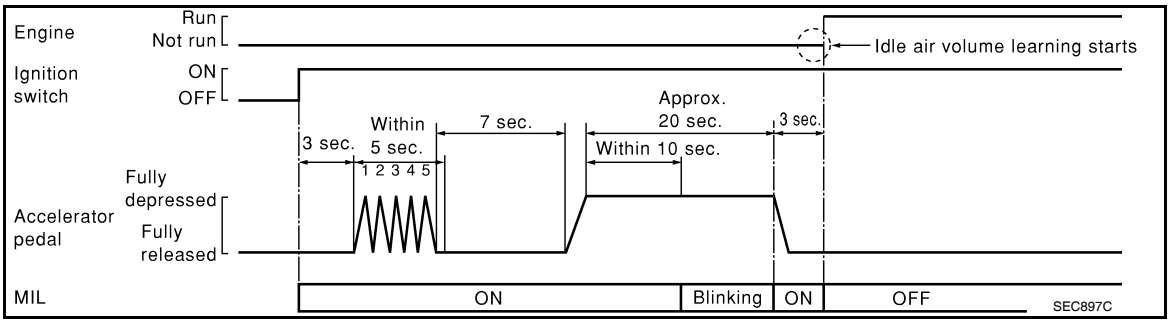

12. Rev up the engine two or three times and make sure that idle speed and ignition timing are within the specifications.

ITEM	SPECIFICATION
Idle speed	650 ± 50 rpm (in P or N position)
Ignition timing	15 ± 5° BTDC (in P or N position)

13. If idle speed and ignition timing are not within the specification, Idle Air Volume Learning will not be carried out successfully. In this case, find the cause of the incident by referring to the DIAGNOSTIC PROCEDURE below.

DIAGNOSTIC PROCEDURE

If idle air volume learning cannot be performed successfully, proceed as follows:

1. **Check that throttle valve is fully closed.**
2. **Check PCV valve operation.**
3. **Check that downstream of throttle valve is free from air leakage.**
4. **When the above three items check out OK, engine component parts and their installation condition are questionable. Check and eliminate the cause of the incident.**
   It is useful to perform EC-75 .
5. **If any of the following conditions occur after the engine has started, eliminate the cause of the incident and perform Idle Air Volume Learning all over again:**
   - **Engine stalls.**
   - **Erroneous idle.**

FUNCTION DIAGNOSIS

ENGINE CONTROL SYSTEM

System Diagram

INFOID:0000000001351344

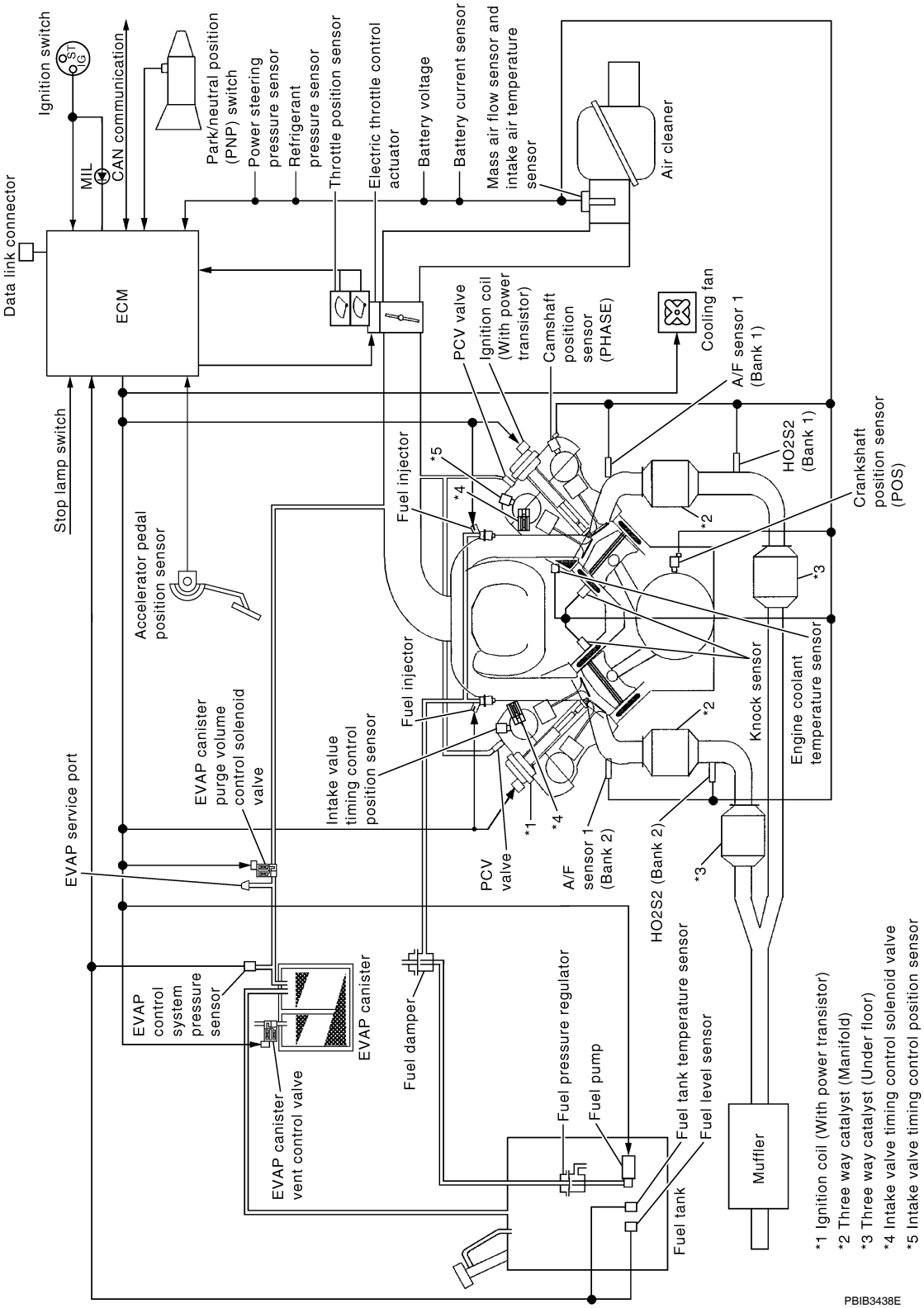

Engine Control Component Parts Location

INFOID:0000000001351343

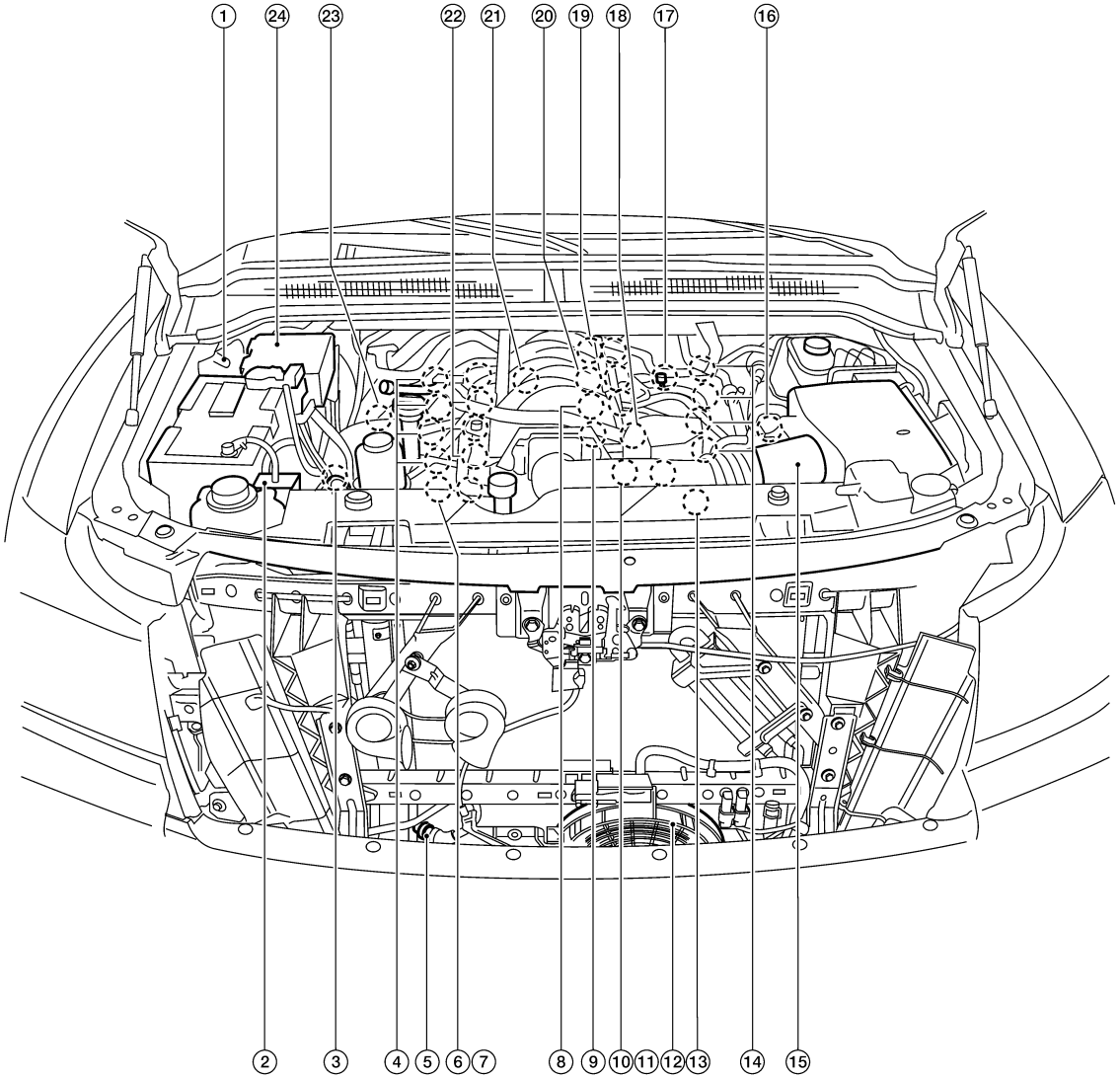

BBIA0743E

1.	ECM	2.	Battery current sensor	3.	Power steering pressure sensor
4.	Ignition coil (with power transistor) and spark plug (bank 2)	5.	Refrigerant pressure sensor	6.	Intake valve timing control position sensor (bank 2)
7.	Intake valve timing control solenoid valve (bank 2)	8.	Engine coolant temperature sensor	9.	Electric throttle control actuator
10.	Intake valve timing control position sensor (bank 1)	11.	Intake valve timing control solenoid valve (bank 1)	12.	Cooling fan motor
13.	Camshaft position sensor (PHASE)	14.	Ignition coil (with power transistor) and spark plug (bank 1)	15.	Mass air flow sensor (with intake air temperature sensor)
16.	A/F sensor 1 (bank 1)	17.	EVAP service port	18.	Fuel injector (bank 1)
19.	Knock sensor (bank 1)	20.	EVAP canister purge volume control solenoid valve	21.	Knock sensor (bank 2)
22.	Fuel injector (bank 2)	23.	A/F sensor 1 (bank 2)	24.	IPDM E/R

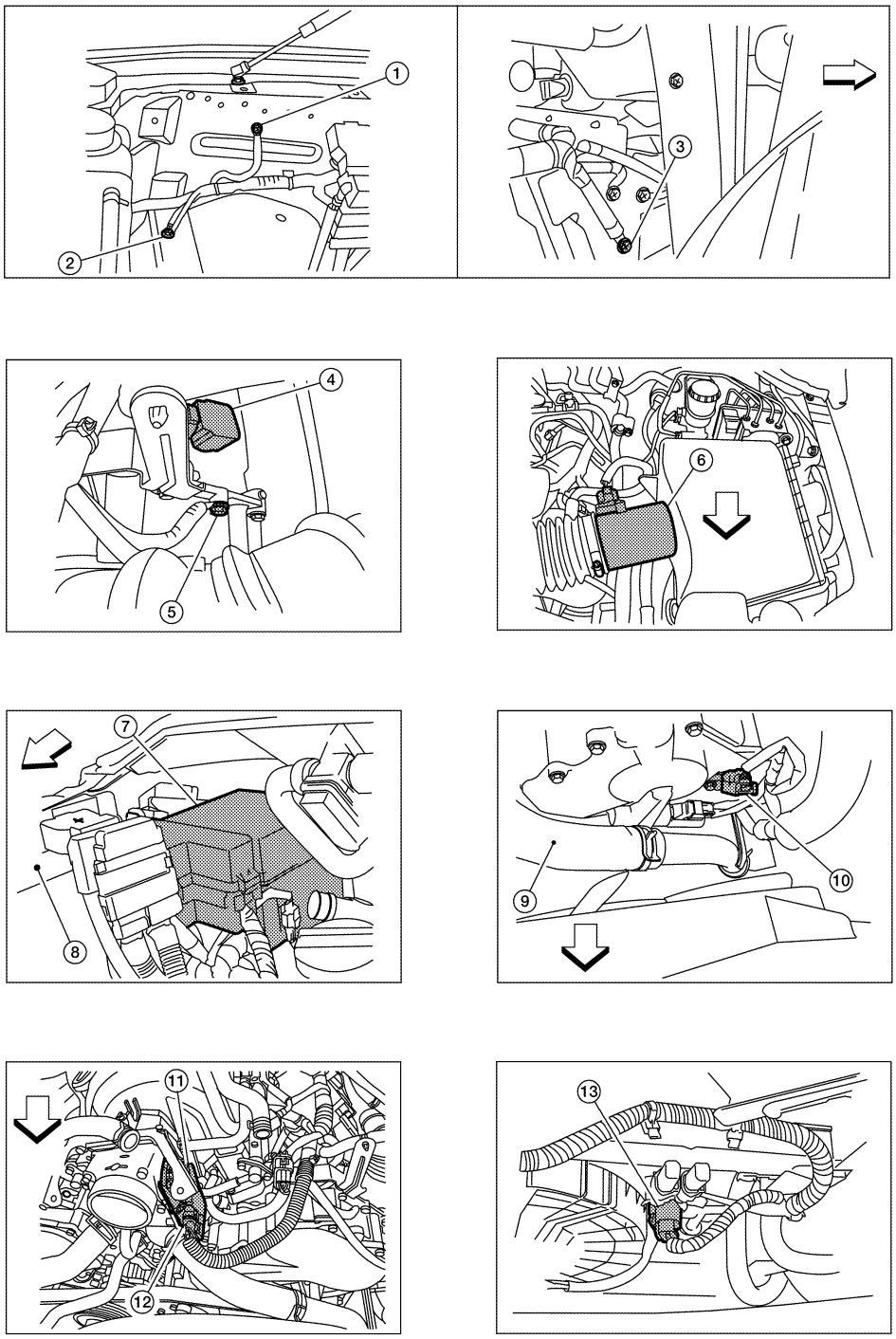

BBIA0778E

1. Body ground (view with battery removed)	2. Body ground (view with battery removed)	3. Body ground
4. No. 1 ignition coil	5. Engine ground	6. Mass air flow sensor (with intake air temperature sensor)
7. IPDM E/R	8. Battery	9. Radiator hose

10. Camshaft position sensor (PHASE)
11. Electric throttle control actuator (view with intake air duct removed)
12. Cooling fan motor harness connector

⇦ : Vehicle front

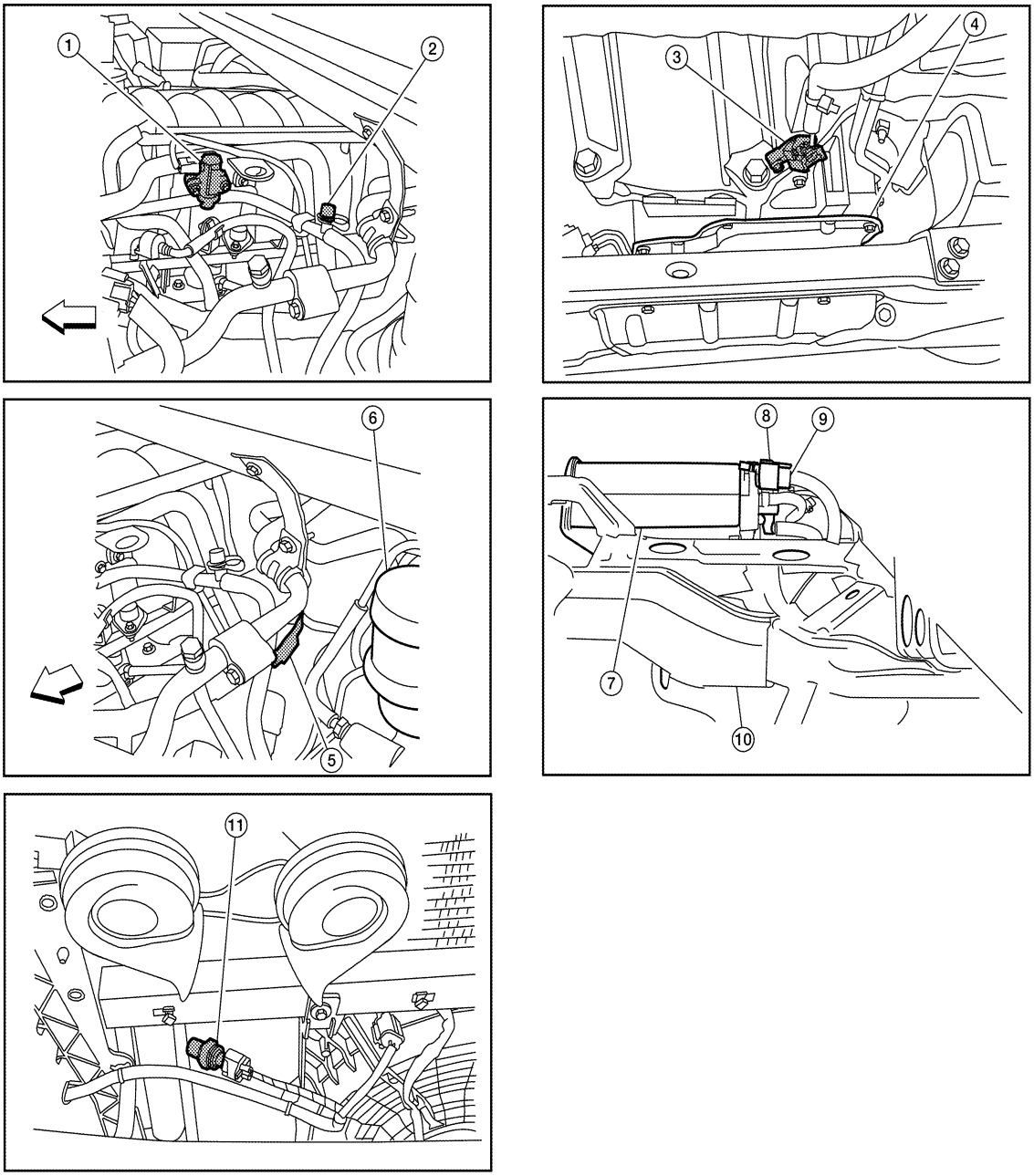

BBIA0739E

1. EVAP canister purge volume control solenoid valve (view with engine cover removed)
2. EVAP service port (view with engine cover removed)
3. Crankshaft position sensor (POS) (view from under the vehicle)
4. Engine oil pan (view from under the vehicle)
5. Condenser-1
6. Brake fluid reservoir
7. EVAP canister (view with fuel tank removed)
8. EVAP control system pressure sensor (view with fuel tank removed)
9. EVAP canister vent control valve (view with fuel tank removed)
10. Rear suspension member (view with fuel tank removed)
11. Refrigerant pressure sensor (view with front grille removed)
12. Intake valve timing control position sensor (bank 2) (view with engine cover and intake air duct removed)
13. Intake valve timing control position sensor (bank 1) (view with engine cover and intake air duct removed)
14. Intake valve timing control solenoid valve (bank 2) (view with engine cover and intake air duct removed)
15. Drive belt (view with engine cover and intake air duct removed)
16. Radiator hose (view with engine cover and intake air duct removed)
17. Intake valve timing control solenoid valve (bank 1) (view with engine cover and intake air duct removed)

⇦ : Vehicle front

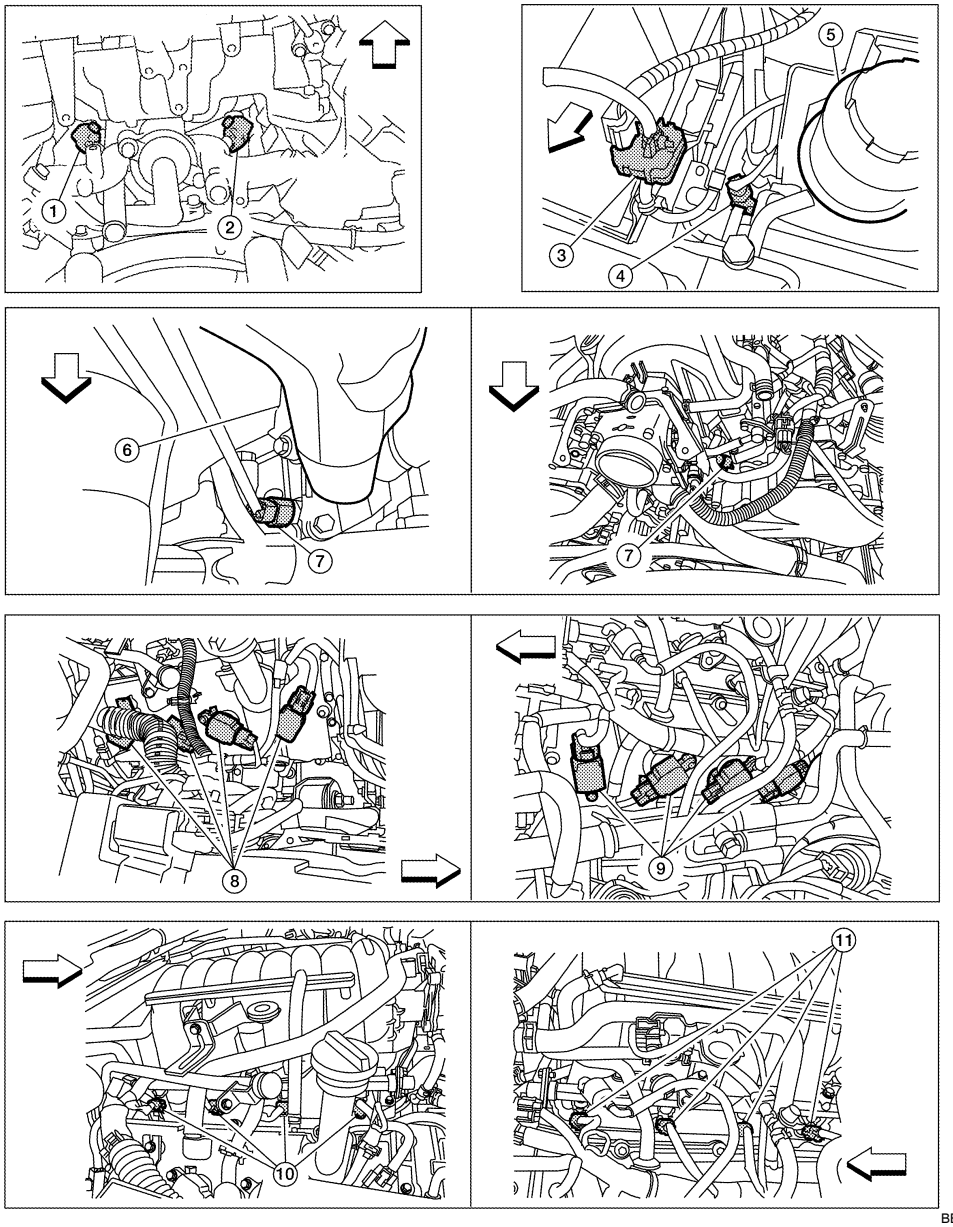

BBIA0774E

1. Knock sensor (bank 1) (view with engine removed)
2. Knock sensor (bank 2) (view with engine removed)
3. Battery current sensor
4. Power steering pressure sensor
5. Power steering fluid reservoir
6. Intake manifold
7. Engine coolant temperature sensor
8. Ignition coils (with power transistor)
9. Ignition coil (with power transistor)
10. Injector harness connectors (bank 2)
11. Injector harness connectors (bank 1)

⇦ : Vehicle front

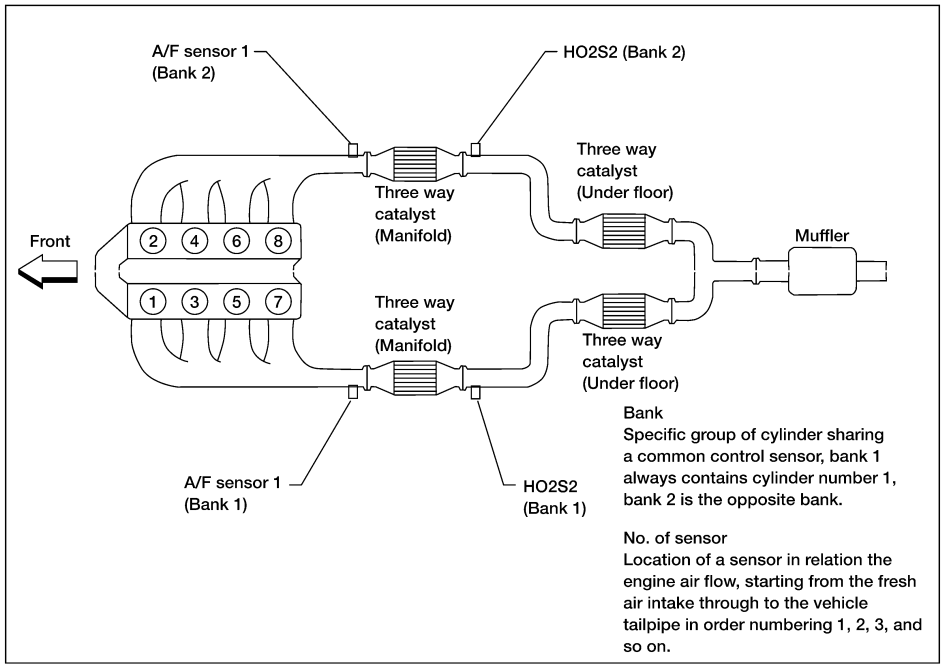

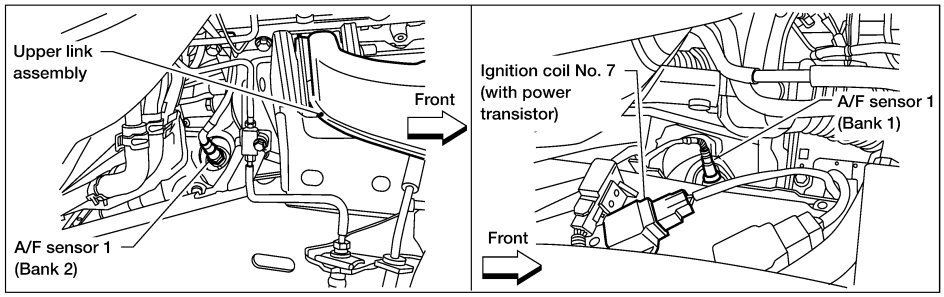

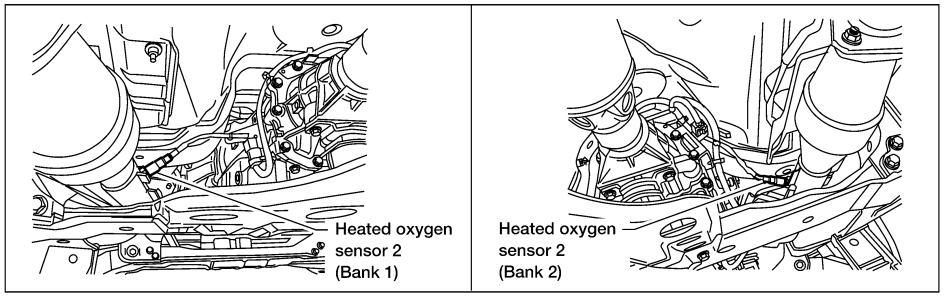

BBIA0384E

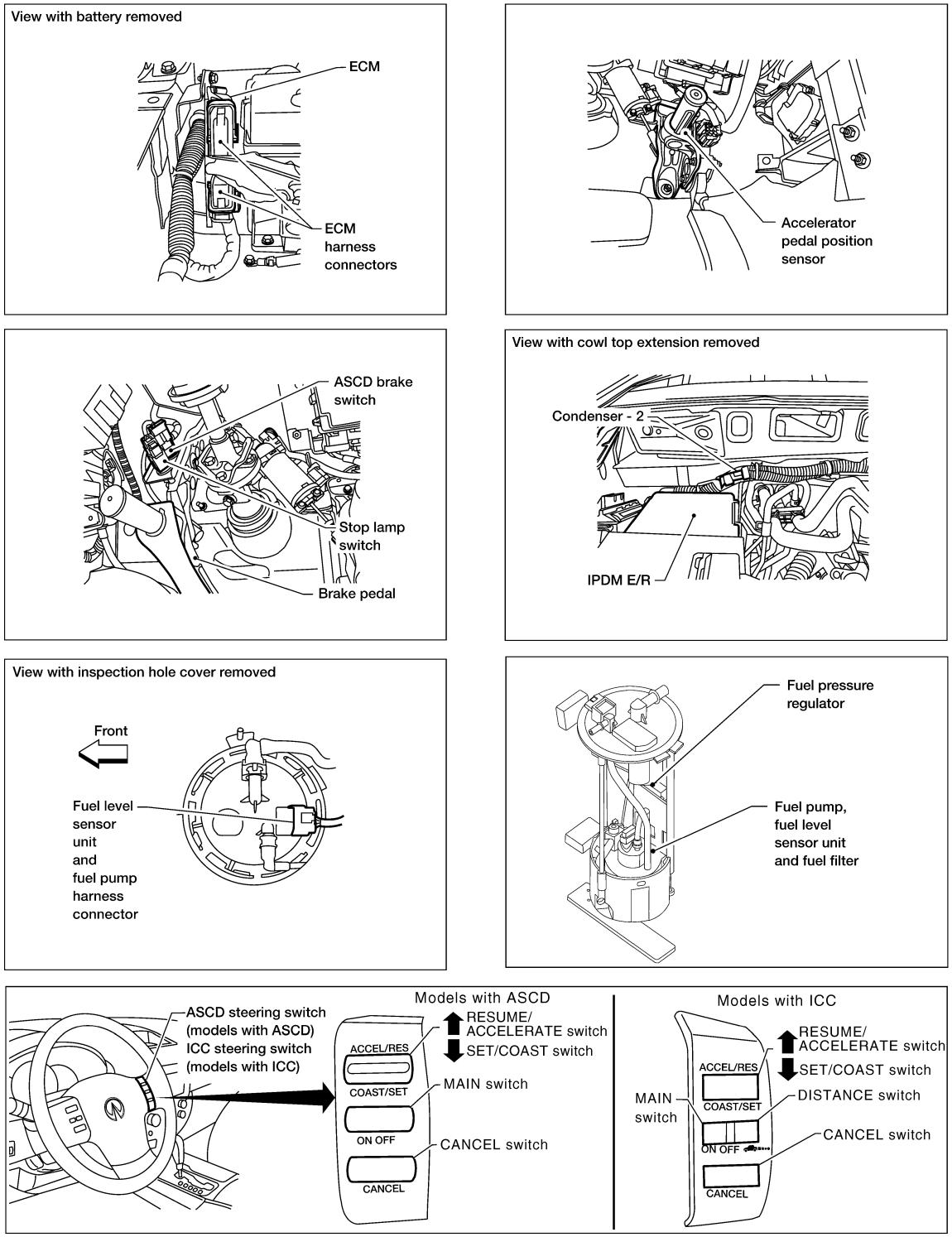
View with battery removed
ECM
ECM harness connectors
Accelerator pedal position sensor
ASCD brake switch
Stop lamp switch
Brake pedal
View with cowl top extension removed
Condenser - 2
IPDM E/R
View with inspection hole cover removed
Front
Fuel level sensor unit and fuel pump harness connector
Fuel pressure regulator
Fuel pump, fuel level sensor unit and fuel filter
ASCD steering switch (models with ASCD) ICC steering switch (models with ICC)
Models with ASCD
RESUME/ ACCELERATE switch
SET/COAST switch
MAIN switch
CANCEL switch
ACCEL/RES
COAST/SET
ON OFF
CANCEL
Models with ICC
RESUME/ ACCELERATE switch
SET/COAST switch
DISTANCE switch
MAIN switch
CANCEL switch
ACCEL/RES
COAST/SET
ON OFF
CANCEL
PBIB2639E

MULTIPORT FUEL INJECTION SYSTEM

System Description

INFOID:0000000001351227

INPUT/OUTPUT SIGNAL CHART

Sensor	Input signal to ECM	ECM function	Actuator
Crankshaft position sensor (POS)	Engine speed*3 Piston position	Fuel injection & mixture ratio control	Fuel injector
Camshaft position sensor (PHASE)			
Mass air flow sensor	Amount of intake air		
Engine coolant temperature sensor	Engine coolant temperature		
Air fuel ratio (A/F) sensor 1	Density of oxygen in exhaust gas		
Throttle position sensor	Throttle position		
Accelerator pedal position sensor	Accelerator pedal position		
TCM	Gear position		
Knock sensor	Engine knocking condition		
Battery	Battery voltage*3		
Power steering pressure sensor	Power steering operation		
Heated oxygen sensor 2*1	Density of oxygen in exhaust gas		
ABS actuator and electric unit (control unit)	VDC/TCS operation command*2		
Air conditioner switch	Air conditioner operation*2		
Wheel sensor	Vehicle speed*2		

*1: This sensor is not used to control the engine system. This is used only for the on board diagnosis.

*2: This signal is sent to the ECM through CAN communication line.

*3: ECM determines the start signal status by the signals of engine speed and battery voltage.

SYSTEM DESCRIPTION

The amount of fuel injected from the fuel injector is determined by the ECM. The ECM controls the length of time the valve remains open (injection pulse duration). The amount of fuel injected is a program value in the ECM memory. The program value is preset by engine operating conditions. These conditions are determined by input signals (for engine speed and intake air) from both the crankshaft position sensor and the mass air flow sensor.

VARIOUS FUEL INJECTION INCREASE/DECREASE COMPENSATION

In addition, the amount of fuel injected is compensated to improve engine performance under various operating conditions as listed below.

<Fuel increase>
- During warm-up
- When starting the engine
- During acceleration
- Hot-engine operation
- When selector lever is changed from N to D
- High-load, high-speed operation

<Fuel decrease>
- During deceleration
- During high engine speed operation

MIXTURE RATIO FEEDBACK CONTROL (CLOSED LOOP CONTROL)

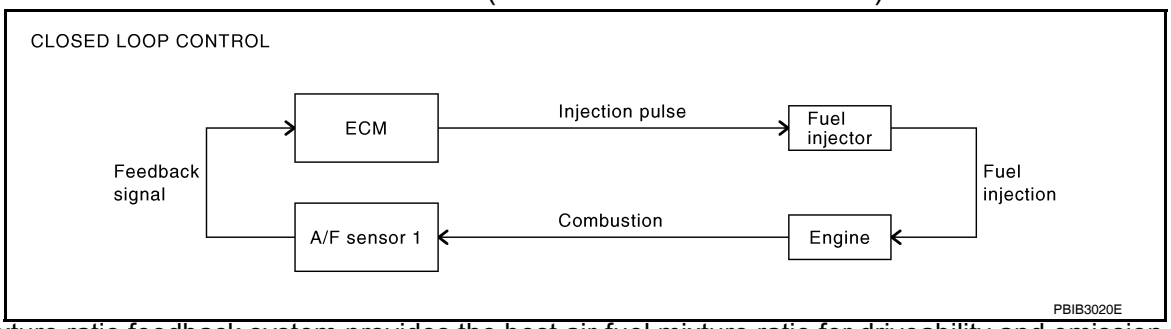

The mixture ratio feedback system provides the best air-fuel mixture ratio for driveability and emission control. The three way catalyst (manifold) can then better reduce CO, HC and NOx emissions. This system uses air fuel ratio (A/F) sensor 1 in the exhaust manifold to monitor whether the engine operation is rich or lean. The ECM adjusts the injection pulse width according to the sensor voltage signal. For more information about air fuel ratio (A/F) sensor 1, refer to EC-141. This maintains the mixture ratio within the range of stoichiometric (ideal air-fuel mixture).
This stage is referred to as the closed loop control condition.
Heated oxygen sensor 2 is located downstream of the three way catalyst (manifold). Even if the switching characteristics of air fuel ratio (A/F) sensor 1 shift, the air-fuel ratio is controlled to stoichiometric by the signal from heated oxygen sensor 2.

Open Loop Control

The open loop system condition refers to when the ECM detects any of the following conditions. Feedback control stops in order to maintain stabilized fuel combustion.
- Deceleration and acceleration
- High-load, high-speed operation
- Malfunction of A/F sensor 1 or its circuit
- Insufficient activation of A/F sensor 1 at low engine coolant temperature
- High engine coolant temperature
- During warm-up
- After shifting from N to D
- When starting the engine

MIXTURE RATIO SELF-LEARNING CONTROL

The mixture ratio feedback control system monitors the mixture ratio signal transmitted from A/F sensor 1. This feedback signal is then sent to the ECM. The ECM controls the basic mixture ratio as close to the theoretical mixture ratio as possible. However, the basic mixture ratio is not necessarily controlled as originally designed. Both manufacturing differences (i.e., mass air flow sensor hot wire) and characteristic changes during operation (i.e., injector clogging) directly affect mixture ratio.
Accordingly, the difference between the basic and theoretical mixture ratios is monitored in this system. This is then computed in terms of “injection pulse duration” to automatically compensate for the difference between the two ratios.
“Fuel trim” refers to the feedback compensation value compared against the basic injection duration. Fuel trim includes short term fuel trim and long term fuel trim.
“Short term fuel trim” is the short-term fuel compensation used to maintain the mixture ratio at its theoretical value. The signal from A/F sensor 1 indicates whether the mixture ratio is RICH or LEAN compared to the theoretical value. The signal then triggers a reduction in fuel volume if the mixture ratio is rich, and an increase in fuel volume if it is lean.
“Long term fuel trim” is overall fuel compensation carried out long-term to compensate for continual deviation of the short term fuel trim from the central value. Such deviation will occur due to individual engine differences, wear over time and changes in the usage environment.

FUEL INJECTION TIMING

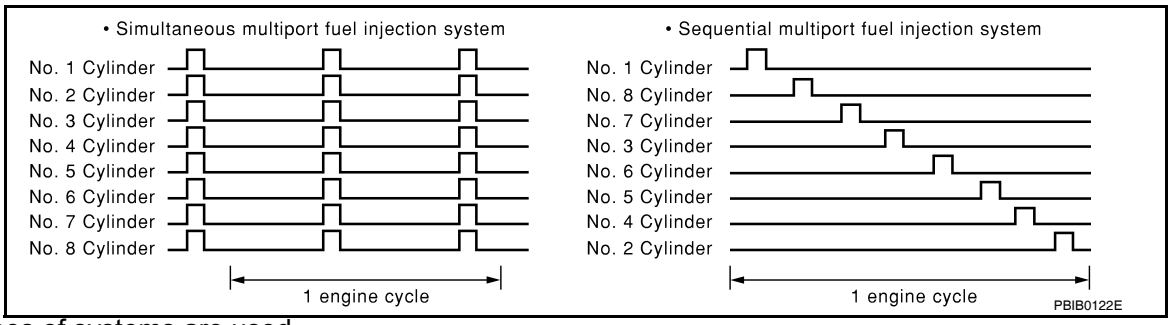

Two types of systems are used.

Sequential Multiport Fuel Injection System

Fuel is injected into each cylinder during each engine cycle according to the firing order. This system is used when the engine is running.

Simultaneous Multiport Fuel Injection System

Fuel is injected simultaneously into all eight cylinders twice each engine cycle. In other words, pulse signals of the same width are simultaneously transmitted from the ECM.
The eight fuel injectors will then receive the signals two times for each engine cycle.
This system is used when the engine is being started and/or if the fail-safe system (CPU) is operating.

FUEL SHUT-OFF

Fuel to each cylinder is cut off during deceleration, operation of the engine at excessively high speeds or operation of the vehicle at excessively high speed.

ELECTRIC IGNITION SYSTEM

System Description

INFOID:0000000001351228

INPUT/OUTPUT SIGNAL CHART

Sensor	Input signal to ECM	ECM function	Actuator
Crankshaft position sensor (POS)	Engine speed*2 Piston position	Ignition timing control	Power transistor
Camshaft position sensor (PHASE)			
Mass air flow sensor	Amount of intake air		
Engine coolant temperature sensor	Engine coolant temperature		
Throttle position sensor	Throttle position		
Accelerator pedal position sensor	Accelerator pedal position		
Knock sensor	Engine knocking		
TCM	Gear position		
Battery	Battery voltage*2		
Wheel sensor	Vehicle speed*1		

*1: This signal is sent to the ECM through CAN communication line.

*2: ECM determines the start signal status by the signals of engine speed and battery voltage.

SYSTEM DESCRIPTION

Firing order: 1 - 8 - 7 - 3 - 6 - 5 - 4 -2

The ignition timing is controlled by the ECM to maintain the best air-fuel ratio for every running condition of the engine. The ignition timing data is stored in the ECM.

The ECM receives information such as the injection pulse width and camshaft position sensor signal. Computing this information, ignition signals are transmitted to the power transistor.

During the following conditions, the ignition timing is revised by the ECM according to the other data stored in the ECM.

- At starting
- During warm-up
- At idle
- At low battery voltage
- During acceleration

The knock sensor retard system is designed only for emergencies. The basic ignition timing is programmed within the anti-knocking zone, if recommended fuel is used under dry conditions. The retard system does not operate under normal driving conditions. If engine knocking occurs, the knock sensor monitors the condition. The signal is transmitted to the ECM. The ECM retards the ignition timing to eliminate the knocking condition.

AIR CONDITIONING CUT CONTROL

Input/Output Signal Chart

INFOID:0000000001351236

Sensor	Input Signal to ECM	ECM function	Actuator
Air conditioner switch	Air conditioner ON signal*1	Air conditioner cut control	Air conditioner relay
Accelerator pedal position sensor	Accelerator pedal position		
Crankshaft position sensor (POS) Camshaft position sensor (PHASE)	Engine speed*2		
Engine coolant temperature sensor	Engine coolant temperature		
Battery	Battery voltage*2		
Refrigerant pressure sensor	Refrigerant pressure		
Power steering pressure sensor	Power steering operation		
Wheel sensor	Vehicle speed*1		

*1: This signal is sent to the ECM through CAN communication line.

*2: ECM determines the start signal status by the signals of engine speed and battery voltage.

System Description

INFOID:0000000001351237

This system improves engine operation when the air conditioner is used.
Under the following conditions, the air conditioner is turned OFF.

- When the accelerator pedal is fully depressed.
- When cranking the engine.
- At high engine speeds.
- When the engine coolant temperature becomes excessively high.
- When operating power steering during low engine speed or low vehicle speed.
- When engine speed is excessively low.
- When refrigerant pressure is excessively low or high.

AUTOMATIC SPEED CONTROL DEVICE (ASCD)

System Description

INFOID:0000000001351238

INPUT/OUTPUT SIGNAL CHART

Sensor	Input signal to ECM	ECM function	Actuator
ASCD brake switch	Brake pedal operation	ASCD vehicle speed control	Electric throttle control actuator
Stop lamp switch	Brake pedal operation		
ASCD steering switch	ASCD steering switch operation		
Wheel sensor	Vehicle speed*		
TCM	Powertrain revolution*		
	Gear position		

*: This signal is sent to the ECM through CAN communication line

BASIC ASCD SYSTEM

Refer to Owner's Manual for ASCD operating instructions.
Automatic Speed Control Device (ASCD) allows a driver to keep vehicle at predetermined constant speed without depressing accelerator pedal. Driver can set vehicle speed in advance between approximately 40 km/h (25 MPH) and 144 km/h (89 MPH).
ECM controls throttle angle of electric throttle control actuator to regulate engine speed.
Operation status of ASCD is indicated by CRUISE indicator and SET indicator in combination meter. If any malfunction occurs in ASCD system, it automatically deactivates control.
NOTE:
Always drive vehicle in safe manner according to traffic conditions and obey all traffic laws.

SET OPERATION

Press MAIN switch. (The CRUISE indicator in combination meter illuminates.)
When vehicle speed reaches a desired speed between approximately 40 km/h (25 MPH) and 144 km/h (89 MPH), press SET/COAST switch. (Then SET indicator in combination meter illuminates.)

ACCELERATE OPERATION

If the RESUME/ACCELERATE switch is pressed during cruise control driving, increase the vehicle speed until the switch is released or vehicle speed reaches maximum speed controlled by the system.
And then ASCD will keep the new set speed.

CANCEL OPERATION

When any of following conditions exist, cruise operation will be canceled.
- CANCEL switch is pressed
- More than 2 switches at ASCD steering switch are pressed at the same time (Set speed will be cleared)
- Brake pedal is depressed
- Selector lever is changed to N, P, R position
- Vehicle speed decreased to 13 km/h (8 MPH) lower than the set speed
- VDC system is operated

When the ECM detects any of the following conditions, the ECM will cancel the cruise operation and inform the driver by blinking indicator lamp.
- Engine coolant temperature is slightly higher than the normal operating temperature, CRUISE lamp may blink slowly.
  When the engine coolant temperature decreases to the normal operating temperature, CRUISE lamp will stop blinking and the cruise operation will be able to work by pressing SET/COAST switch or RESUME/ACCELERATE switch.
- Malfunction for some self-diagnoses regarding ASCD control: SET lamp will blink quickly.

If MAIN switch is turned to OFF during ASCD is activated, all of ASCD operations will be canceled and vehicle speed memory will be erased.

COAST OPERATION

When the SET/COAST switch is pressed during cruise control driving, decrease vehicle set speed until the switch is released. And then ASCD will keep the new set speed.

RESUME OPERATION

When the RESUME/ACCELERATE switch is pressed after cancel operation other than pressing MAIN switch is performed, vehicle speed will return to last set speed. To resume vehicle set speed, vehicle condition must meet following conditions.

- Brake pedal is released
- A/T selector lever is in other than P and N positions
- Vehicle speed is greater than 40 km/h (25 MPH) and less than 144 km/h (89 MPH)

Component Description

INFOID:0000000001351239

ASCD STEERING SWITCH

Refer to EC-336.

ASCD BRAKE SWITCH

Refer to EC-347, and EC-390.

STOP LAMP SWITCH

Refer to EC-347, EC-356 and EC-390.

ELECTRIC THROTTLE CONTROL ACTUATOR

Refer to EC-359, EC-362, EC-366 and EC-368.

ASCD INDICATOR

Refer to EC-394.

CAN COMMUNICATION

System Description

INFOID:0000000001351240

CAN (Controller Area Network) is a serial communication line for real time application. It is an on-vehicle multiplex communication line with high data communication speed and excellent error detection ability. Many electronic control units are equipped onto a vehicle, and each control unit shares information and links with other control units during operation (not independent). In CAN communication, control units are connected with 2 communication lines (CAN H line, CAN L line) allowing a high rate of information transmission with less wiring. Each control unit transmits/receives data but selectively reads required data only.
Refer to LAN-44, "CAN System Specification Chart", about CAN communication for detail.

COOLING FAN CONTROL

Description

INFOID:0000000001351873

SYSTEM DESCRIPTION

Cooling Fan Control

Sensor	Input signal to ECM	ECM function	Actuator
Crankshaft position sensor (POS) Camshaft position sensor (PHASE)	Engine speed*1	Cooling fan control	IPDM E/R (Cooling fan relay)
Battery	Battery voltage*1		
Wheel sensor	Vehicle speed*2		
Engine coolant temperature sensor	Engine coolant temperature		
Air conditioner switch	Air conditioner ON signal*2		
Refrigerant pressure sensor	Refrigerant pressure		

*1: The ECM determines the start signal status by the signals of engine speed and battery voltage.

*2: This signal is sent to ECM through CAN communication line.

The ECM controls the cooling fan corresponding to the vehicle speed, engine coolant temperature, refrigerant pressure, and air conditioner ON signal. The control system has 2-step control [HI/OFF].

Cooling Fan Operation

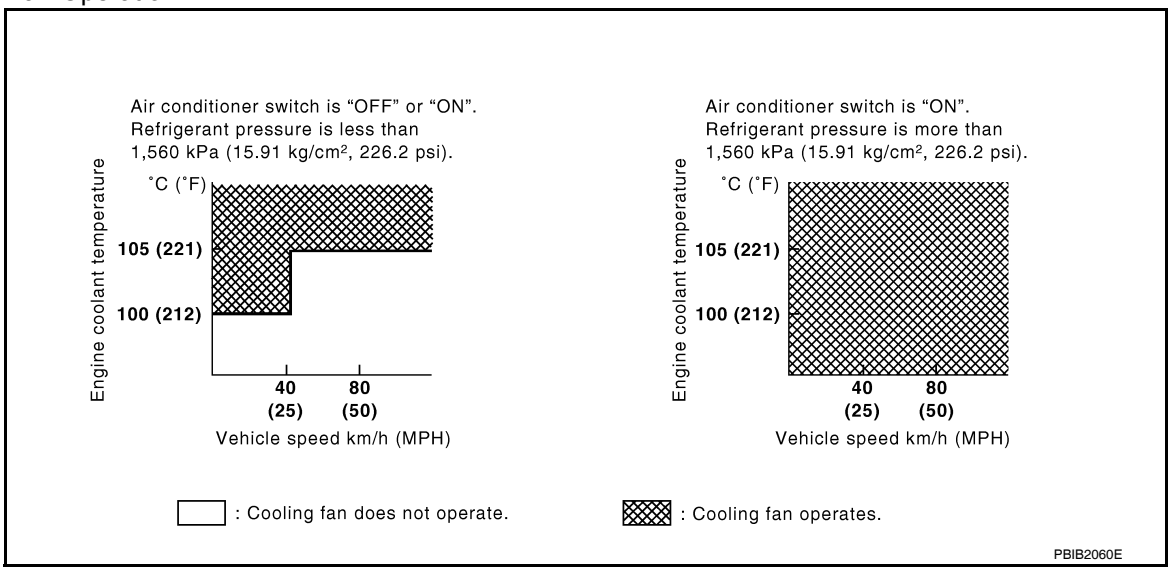

EVAPORATIVE EMISSION SYSTEM

Description

INFOID:0000000001351241

SYSTEM DESCRIPTION

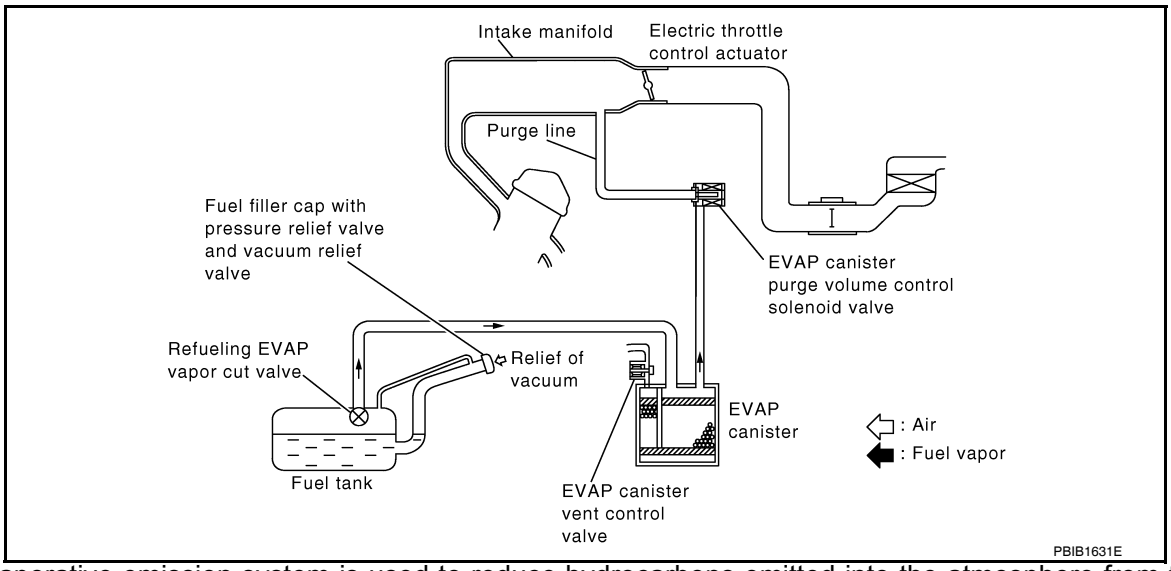

The evaporative emission system is used to reduce hydrocarbons emitted into the atmosphere from the fuel system. This reduction of hydrocarbons is accomplished by activated charcoals in the EVAP canister.
The fuel vapor in the sealed fuel tank is led into the EVAP canister which contains activated carbon and the vapor is stored there when the engine is not operating or when refueling to the fuel tank.
The vapor in the EVAP canister is purged by the air through the purge line to the intake manifold when the engine is operating. EVAP canister purge volume control solenoid valve is controlled by ECM. When the engine operates, the flow rate of vapor controlled by EVAP canister purge volume control solenoid valve is proportionally regulated as the air flow increases.
EVAP canister purge volume control solenoid valve also shuts off the vapor purge line during decelerating and idling.

EVAPORATIVE EMISSION LINE DRAWING

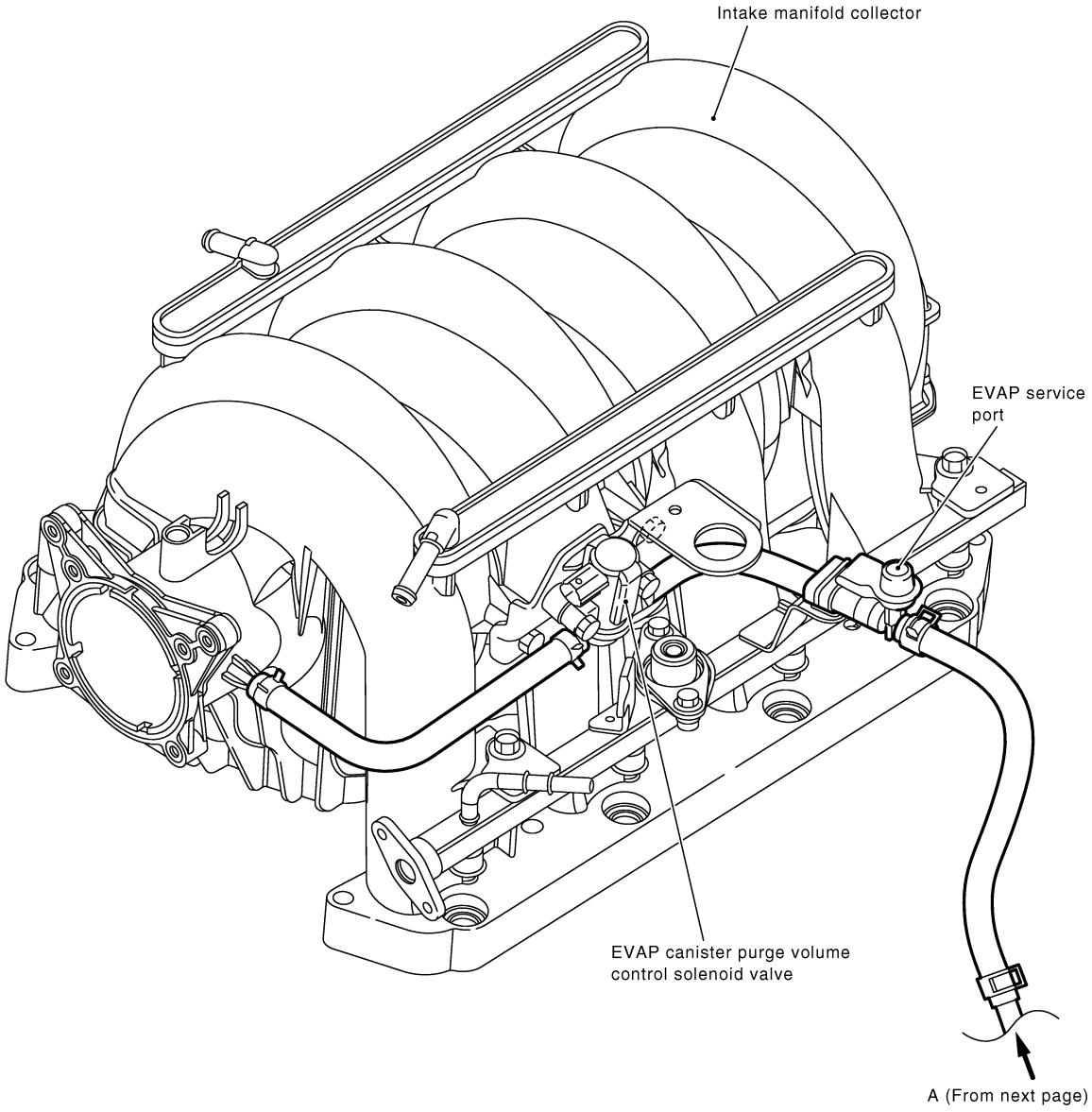

NOTE:
Do not use soapy water or any type of solvent while installing vacuum hoses or purge hoses.

PBIB2053E

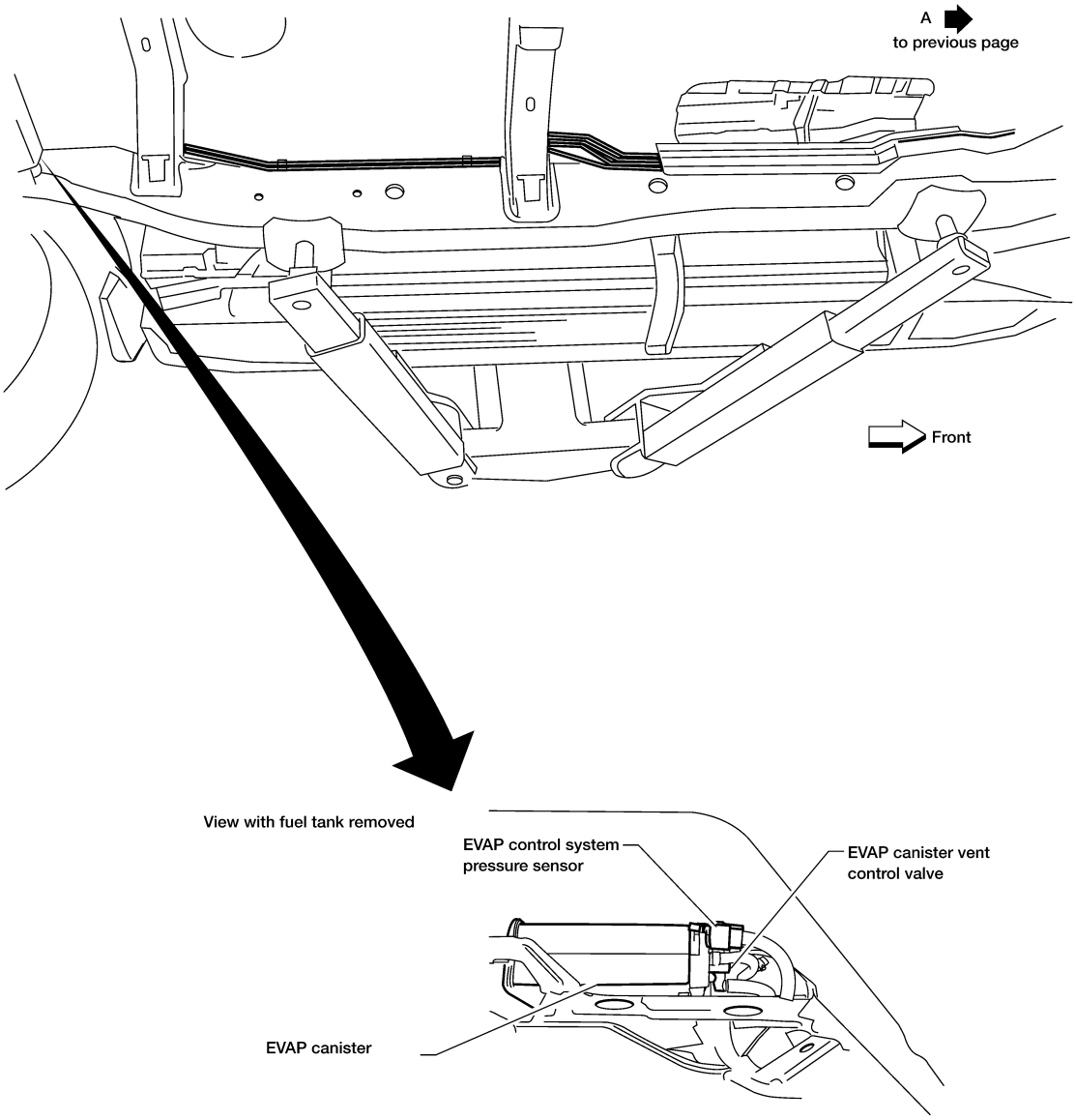
A
to previous page
Front
View with fuel tank removed
EVAP control system pressure sensor
EVAP canister vent control valve
EVAP canister
BBIA0444E

INTAKE VALVE TIMING CONTROL

Description

INFOID:0000000001351376

SYSTEM DESCRIPTION

Sensor	Input signal to ECM function	ECM	Actuator
Crankshaft position sensor (POS) Camshaft position sensor (PHASE)	Engine speed	Intake valve timing control	Intake valve timing control solenoid valve
Intake valve timing control position sensor	Intake valve timing signal		
Engine coolant temperature sensor	Engine coolant temperature		
Wheel sensor	Vehicle speed*		

*: This signal is sent to the ECM through CAN communication line

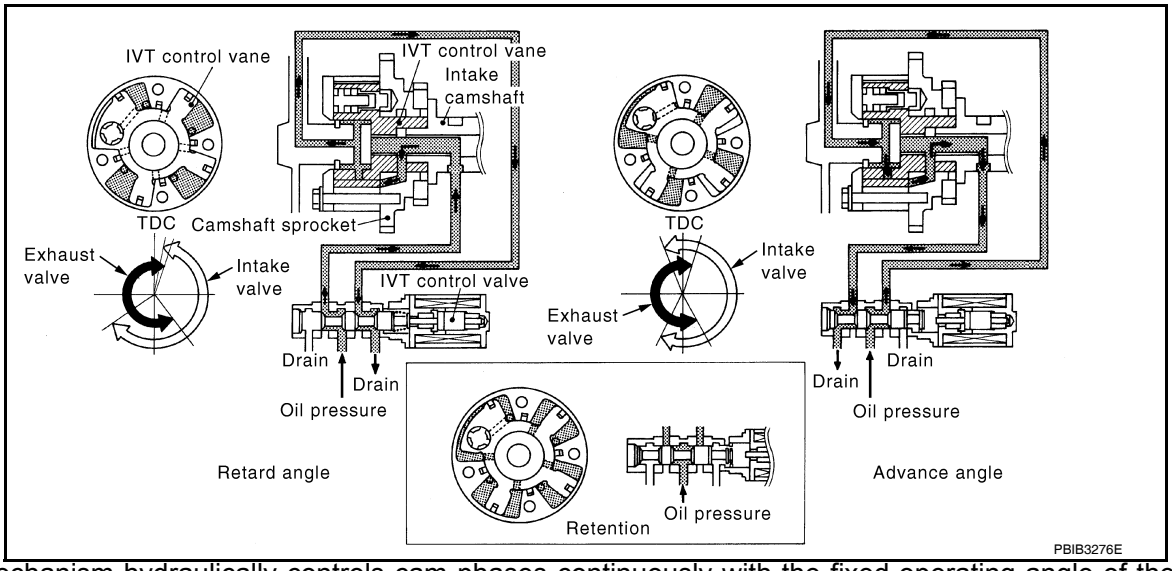

This mechanism hydraulically controls cam phases continuously with the fixed operating angle of the intake valve.

The ECM receives signals such as crankshaft position, camshaft position, engine speed, and engine coolant temperature. Then, the ECM sends ON/OFF pulse duty signals to the intake valve timing (IVT) control solenoid valve depending on driving status. This makes it possible to control the shut/open timing of the intake valve to increase engine torque in low/mid speed range and output in high-speed range.

ON BOARD DIAGNOSTIC (OBD) SYSTEM

Introduction

INFOID:0000000001351323

The ECM has an on board diagnostic system, which detects malfunctions related to engine sensors or actuators. The ECM also records various emission-related diagnostic information including:

Emission-related diagnostic information	Diagnostic service
Diagnostic Trouble Code (DTC)	Service $03 of SAE J1979
Freeze Frame data	Service $02 of SAE J1979
System Readiness Test (SRT) code	Service $01 of SAE J1979
1st Trip Diagnostic Trouble Code (1st Trip DTC)	Service $07 of SAE J1979
1st Trip Freeze Frame data	
Test values and Test limits	Service $06 of SAE J1979
Calibration ID	Service $09 of SAE J1979

The above information can be checked using procedures listed in the table below.

×: Applicable —: Not applicable

	DTC	1st trip DTC	Freeze Frame data	1st trip Freeze Frame data	SRT code	SRT status	Test value
CONSULT-III	×	×	×	×	×	×	—
GST	×	×	×	—	×	×	×
ECM	×	×*	—	—	—	×	—

*: When DTC and 1st trip DTC simultaneously appear on the display, they cannot be clearly distinguished from each other.

The malfunction indicator lamp (MIL) on the instrument panel lights up when the same malfunction is detected in two consecutive trips (Two trip detection logic), or when the ECM enters fail-safe mode. (Refer to EC-459, "Fail-Safe Chart".)

Two Trip Detection Logic

INFOID:0000000001351324

When a malfunction is detected for the first time, 1st trip DTC and 1st trip Freeze Frame data are stored in the ECM memory. The MIL will not light up at this stage. <1st trip>
If the same malfunction is detected again during the next drive, the DTC and Freeze Frame data are stored in the ECM memory, and the MIL lights up. The MIL lights up at the same time when the DTC is stored. <2nd trip> The “trip” in the “Two Trip Detection Logic” means a driving mode in which self-diagnosis is performed during vehicle operation. Specific on board diagnostic items will cause the ECM to light up or blink the MIL, and store DTC and Freeze Frame data, even in the 1st trip, as shown below.

×: Applicable —: Not applicable

Items	MIL				DTC		1st trip DTC	
	1st trip		2nd trip		1st trip displaying	2nd trip displaying	1st trip displaying	2nd trip displaying
	Blinking	Lighting up	Blinking	Lighting up				
Misfire (Possible three way catalyst damage) — DTC: P0300 - P0308 is being detected	×	—	—	—	—	—	×	—
Misfire (Possible three way catalyst damage) — DTC: P0300 - P0308 is being detected	—	—	×	—	—	×	—	—
One trip detection diagnoses (Refer to EC-462, "DTC Index".)	—	×	—	—	×	—	—	—
Except above	—	—	—	×	—	×	×	—

When there is an open circuit on MIL circuit, the ECM cannot warn the driver by lighting up MIL when there is malfunction on engine control system.

Therefore, when electrical controlled throttle and part of ECM related diagnoses are continuously detected as NG for 5 trips, ECM warns the driver that engine control system malfunctions and MIL circuit is open by means of operating fail-safe function.
The fail-safe function also operates when above diagnoses except MIL circuit are detected and demands the driver to repair the malfunction.

Engine operating condition in fail-safe mode	Engine speed will not rise more than 2,500 rpm due to the fuel cut

Emission-related Diagnostic Information

INFOID:0000000001351325

DTC AND 1ST TRIP DTC

The 1st trip DTC (whose number is the same as the DTC number) is displayed for the latest self-diagnostic result obtained. If the ECM memory was cleared previously, and the 1st trip DTC did not reoccur, the 1st trip DTC will not be displayed.
If a malfunction is detected during the 1st trip, the 1st trip DTC is stored in the ECM memory. The MIL will not light up (two trip detection logic). If the same malfunction is not detected in the 2nd trip (meeting the required driving pattern), the 1st trip DTC is cleared from the ECM memory. If the same malfunction is detected in the 2nd trip, both the 1st trip DTC and DTC are stored in the ECM memory and the MIL lights up. In other words, the DTC is stored in the ECM memory and the MIL lights up when the same malfunction occurs in two consecutive trips. If a 1st trip DTC is stored and a non-diagnostic operation is performed between the 1st and 2nd trips, only the 1st trip DTC will continue to be stored. For malfunctions that blink or light up the MIL during the 1st trip, the DTC and 1st trip DTC are stored in the ECM memory.
Procedures for clearing the DTC and the 1st trip DTC from the ECM memory are described in "HOW TO ERASE EMISSION-RELATED DIAGNOSTIC INFORMATION".
For malfunctions in which 1st trip DTCs are displayed, refer to "EMISSION-RELATED DIAGNOSTIC INFORMATION ITEMS". These items are required by legal regulations to continuously monitor the system/component. In addition, the items monitored non-continuously are also displayed on CONSULT-III.
1st trip DTC is specified in Service $07 of SAE J1979. 1st trip DTC detection occurs without lighting up the MIL and therefore does not warn the driver of a malfunction. However, 1st trip DTC detection will not prevent the vehicle from being tested, for example during Inspection/Maintenance (I/M) tests.
When a 1st trip DTC is detected, check, print out or write down and erase (1st trip) DTC and Freeze Frame data as specified in Work Flow procedure Step 2, refer to EC-8, "Trouble Diagnosis Introduction". Then perform DTC Confirmation Procedure or Overall Function Check to try to duplicate the malfunction. If the malfunction is duplicated, the item requires repair.

How to Read DTC and 1st Trip DTC
DTC and 1st trip DTC can be read by the following methods.

With CONSULT-III

With GST

CONSULT-III or GST (Generic Scan Tool) Examples: P0340, P0850, P1148, etc.
These DTCs are prescribed by SAE J2012.
(CONSULT-III also displays the malfunctioning component or system.)

No Tools

The number of blinks of the MIL in the Diagnostic Test Mode II (Self-Diagnostic Results) indicates the DTC.
Example: 0340, 0850, 1148, etc.
These DTCs are controlled by NISSAN.

- **1st trip DTC No. is the same as DTC No.**
- **Output of a DTC indicates a malfunction. However, GST or the Diagnostic Test Mode II do not indicate whether the malfunction is still occurring or has occurred in the past and has returned to normal. CONSULT-III can identify malfunction status as shown below. Therefore, using CONSULT-III (if available) is recommended.**

DTC or 1st trip DTC of a malfunction is displayed in SELF-DIAGNOSTIC RESULTS mode of CONSULT-III. Time data indicates how many times the vehicle was driven after the last detection of a DTC.
If the DTC is being detected currently, the time data will be [0].
If a 1st trip DTC is stored in the ECM, the time data will be [1t].

FREEZE FRAME DATA AND 1ST TRIP FREEZE FRAME DATA

The ECM records the driving conditions such as fuel system status, calculated load value, engine coolant temperature, short term fuel trim, long term fuel trim, engine speed, vehicle speed, absolute throttle position, base fuel schedule and intake air temperature at the moment a malfunction is detected.

Data which are stored in the ECM memory, along with the 1st trip DTC, are called 1st trip freeze frame data. The data, stored together with the DTC data, are called freeze frame data and displayed on CONSULT-III or GST. The 1st trip freeze frame data can only be displayed on the CONSULT-III screen, not on the GST. For details, see EC-63, "CONSULT-III Function (ENGINE)".

Only one set of freeze frame data (either 1st trip freeze frame data or freeze frame data) can be stored in the ECM. 1st trip freeze frame data is stored in the ECM memory along with the 1st trip DTC. There is no priority for 1st trip freeze frame data and it is updated each time a different 1st trip DTC is detected. However, once freeze frame data (2nd trip detection/MIL on) is stored in the ECM memory, 1st trip freeze frame data is no longer stored. Remember, only one set of freeze frame data can be stored in the ECM. The ECM has the following priorities to update the data.

Priority	Items	
1	Freeze frame data	Misfire — DTC: P0300 - P0308 Fuel Injection System Function — DTC: P0171, P0172, P0174, P0175
2		Except the above items (Includes A/T related items)
3	1st trip freeze frame data	

For example, the EGR malfunction (Priority: 2) was detected and the freeze frame data was stored in the 2nd trip. After that when the misfire (Priority: 1) is detected in another trip, the freeze frame data will be updated from the EGR malfunction to the misfire. The 1st trip freeze frame data is updated each time a different malfunction is detected. There is no priority for 1st trip freeze frame data. However, once freeze frame data is stored in the ECM memory, 1st trip freeze data is no longer stored (because only one freeze frame data or 1st trip freeze frame data can be stored in the ECM). If freeze frame data is stored in the ECM memory and freeze frame data with the same priority occurs later, the first (original) freeze frame data remains unchanged in the ECM memory.

Both 1st trip freeze frame data and freeze frame data (along with the DTCs) are cleared when the ECM memory is erased. Procedures for clearing the ECM memory are described in "HOW TO ERASE EMISSION-RELATED DIAGNOSTIC INFORMATION".

SYSTEM READINESS TEST (SRT) CODE

System Readiness Test (SRT) code is specified in Service $01 of SAE J1979.

As part of an enhanced emissions test for Inspection & Maintenance (I/M), certain states require the status of SRT be used to indicate whether the ECM has completed self-diagnosis of major emission systems and components. Completion must be verified in order for the emissions inspection to proceed.

If a vehicle is rejected for a State emissions inspection due to one or more SRT items indicating “INCMP”, use the information in this Service Manual to set the SRT to “CMPLT”.

In most cases the ECM will automatically complete its self-diagnosis cycle during normal usage, and the SRT status will indicate “CMPLT” for each application system. Once set as “CMPLT”, the SRT status remains “CMPLT” until the self-diagnosis memory is erased.

Occasionally, certain portions of the self-diagnostic test may not be completed as a result of the customer's normal driving pattern; the SRT will indicate “INCMP” for these items.

NOTE:

The SRT will also indicate “INCMP” if the self-diagnosis memory is erased for any reason or if the ECM memory power supply is interrupted for several hours.

If, during the state emissions inspection, the SRT indicates “CMPLT” for all test items, the inspector will continue with the emissions test. However, if the SRT indicates “INCMP” for one or more of the SRT items the vehicle is returned to the customer untested.

NOTE:

If MIL is ON during the state emissions inspection, the vehicle is also returned to the customer untested even though the SRT indicates “CMPLT” for all test items. Therefore, it is important to check SRT (“CMPLT”) and DTC (No DTCs) before the inspection.

SRT Item

The table below shows required self-diagnostic items to set the SRT to “CMPLT”.

SRT item (CONSULT-III indication)	Performance Priority*	Required self-diagnostic items to set the SRT to “CMPLT”	Corresponding DTC No.
CATALYST	2	Three way catalyst function	P0420, P0430

SRT item (CONSULT-III indication)	Performance Priority*	Required self-diagnostic items to set the SRT to “CMPLT”	Corresponding DTC No.
EVAP SYSTEM	2	EVAP control system purge flow monitoring	P0441
	1	EVAP control system	P0442
	2	EVAP control system	P0456
HO2S	2	Air fuel ratio (A/F) sensor 1	P0133, P0153
		Heated oxygen sensor 2	P0137, P0157
		Heated oxygen sensor 2	P0138, P0158
		Heated oxygen sensor 2	P0139, P0159

*: If completion of several SRTs is required, perform driving patterns (DTC confirmation procedure), one by one based on the priority for models with CONSULT-III.

SRT Set Timing

SRT is set as “CMPLT” after self-diagnosis has been performed one or more times. Completion of SRT is done regardless of whether the result is OK or NG. The set timing is different between OK and NG results and is shown in the table below.

Self-diagnosis result		Example				
		Diagnosis	Ignition cycle ← ON → OFF	← ON → OFF	← ON → OFF	← ON →
All OK	Case 1	P0400	OK (1)	— (1)	OK (2)	— (2)
		P0402	OK (1)	— (1)	— (1)	OK (2)
		P1402	OK (1)	OK (2)	— (2)	— (2)
		SRT of EGR	“CMPLT”	“CMPLT”	“CMPLT”	“CMPLT”
	Case 2	P0400	OK (1)	— (1)	— (1)	— (1)
		P0402	— (0)	— (0)	OK (1)	— (1)
		P1402	OK (1)	OK (2)	— (2)	— (2)
		SRT of EGR	“INCMP”	“INCMP”	“CMPLT”	“CMPLT”
NG exists	Case 3	P0400	OK	OK	—	—
		P0402	—	—	—	—
		P1402	NG	—	NG	NG (Consecutive NG)
		(1st trip) DTC	1st trip DTC	—	1st trip DTC	DTC (= MIL ON)
		SRT of EGR	“INCMP”	“INCMP”	“INCMP”	“CMPLT”

OK: Self-diagnosis is carried out and the result is OK.

NG: Self-diagnosis is carried out and the result is NG.

—: Self-diagnosis is not carried out.

When all SRT related self-diagnoses showed OK results in a single cycle (Ignition OFF-ON-OFF), the SRT will indicate “CMPLT”. → Case 1 above

When all SRT related self-diagnoses showed OK results through several different cycles, the SRT will indicate “CMPLT” at the time the respective self-diagnoses have at least one OK result. → Case 2 above

If one or more SRT related self-diagnoses showed NG results in 2 consecutive cycles, the SRT will also indicate “CMPLT”. → Case 3 above

The table above shows that the minimum number of cycles for setting SRT as “INCMP” is one (1) for each self-diagnosis (Case 1 & 2) or two (2) for one of self-diagnoses (Case 3). However, in preparation for the state emissions inspection, it is unnecessary for each self-diagnosis to be executed twice (Case 3) for the following reasons:

- The SRT will indicate “CMPLT” at the time the respective self-diagnoses have one (1) OK result.
- The emissions inspection requires “CMPLT” of the SRT only with OK self-diagnosis results.
- When, during SRT driving pattern, 1st trip DTC (NG) is detected prior to “CMPLT” of SRT, the self-diagnosis memory must be erased from ECM after repair.

- If the 1st trip DTC is erased, all the SRT will indicate “INCMP”.

NOTE:
SRT can be set as “CMPLT” together with the DTC(s). Therefore, DTC check must always be carried out prior to the state emission inspection even though the SRT indicates “CMPLT”.

SRT Service Procedure

If a vehicle has failed the state emissions inspection due to one or more SRT items indicating “INCMP”, review the flowchart diagnostic sequence on the next page.

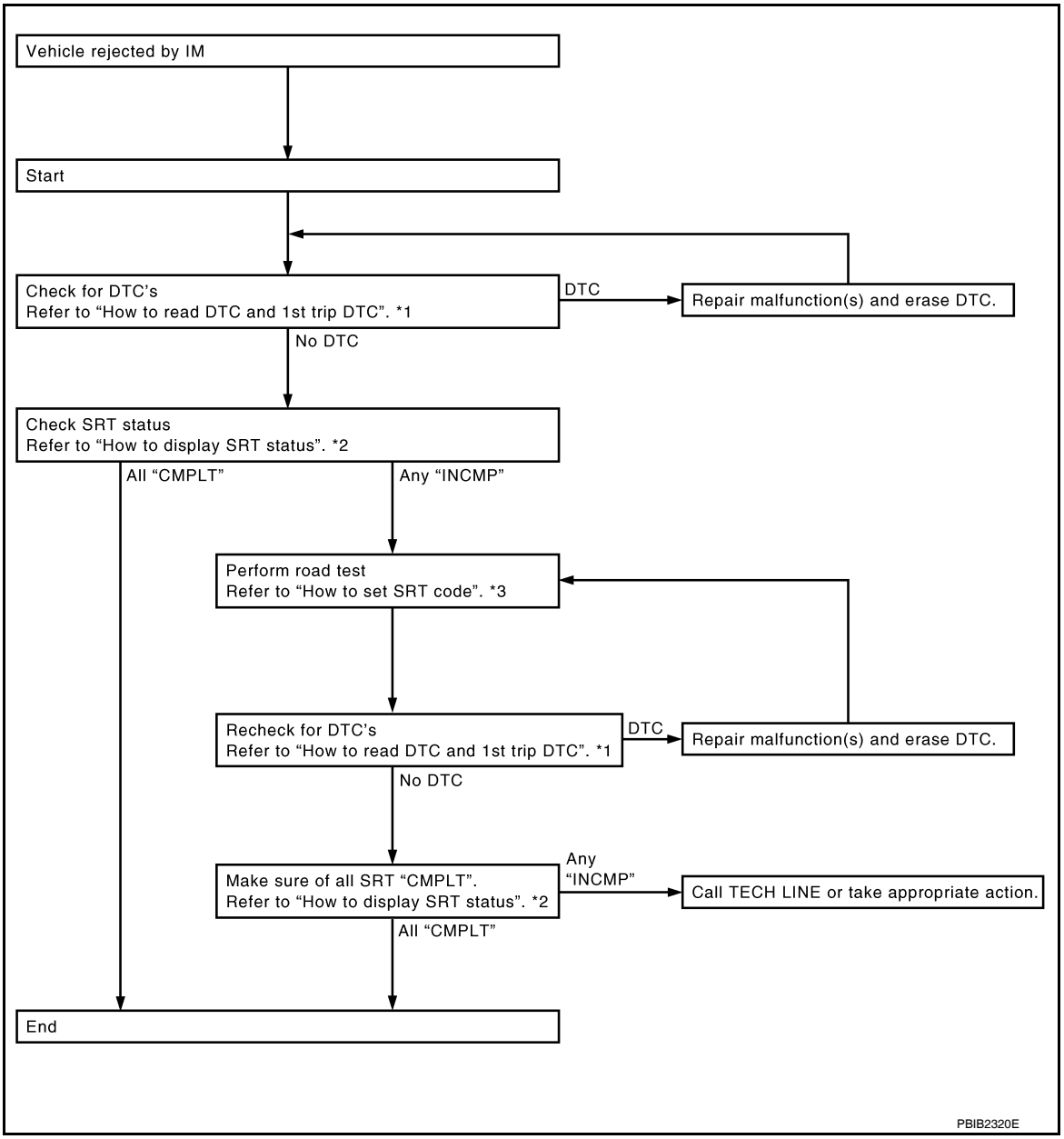

*1 "How to Read DTC and 1st Trip DTC" *2 "How to Display SRT Status" *3 "How to Set SRT Code"

How to Display SRT Status

WITH CONSULT-III

Selecting “SRT STATUS” in “DTC CONFIRMATION” mode with CONSULT-III.

For items whose SRT codes are set, a “CMPLT” is displayed on the CONSULT-III screen; for items whose SRT codes are not set, “INCMP” is displayed.

NOTE:
Though displayed on the CONSULT-III screen, “HO2S HTR” is not SRT item.

WITH GST

Selecting Service $01 with GST (Generic Scan Tool)

NO TOOLS

A SRT code itself can not be displayed while only SRT status can be.

1. Turn ignition switch ON and wait 20 seconds.
2. SRT status is indicated as shown below.
   - When all SRT codes are set, MIL lights up continuously.
   - When any SRT codes are not set, MIL will flash periodically for 10 seconds.

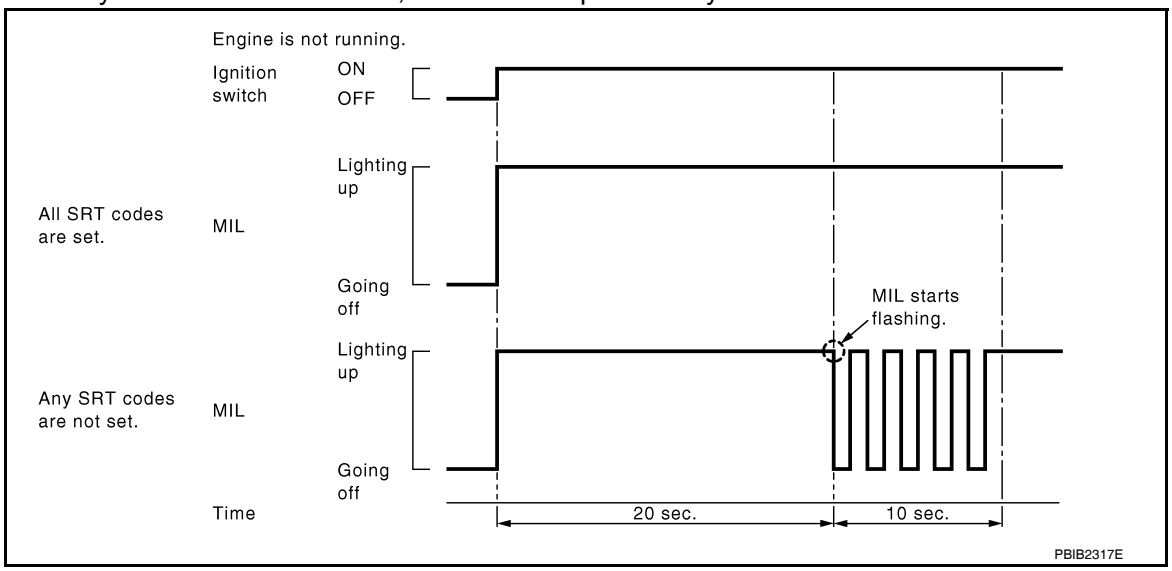

How to Set SRT Code

To set all SRT codes, self-diagnosis for the items indicated above must be performed one or more times. Each diagnosis may require a long period of actual driving under various conditions.

WITH CONSULT-III

Perform corresponding DTC Confirmation Procedure one by one based on Performance Priority in the table on "SRT Item".

WITHOUT CONSULT-III

The most efficient driving pattern in which SRT codes can be properly set is explained on the next page. The driving pattern should be performed one or more times to set all SRT codes.

Driving Pattern

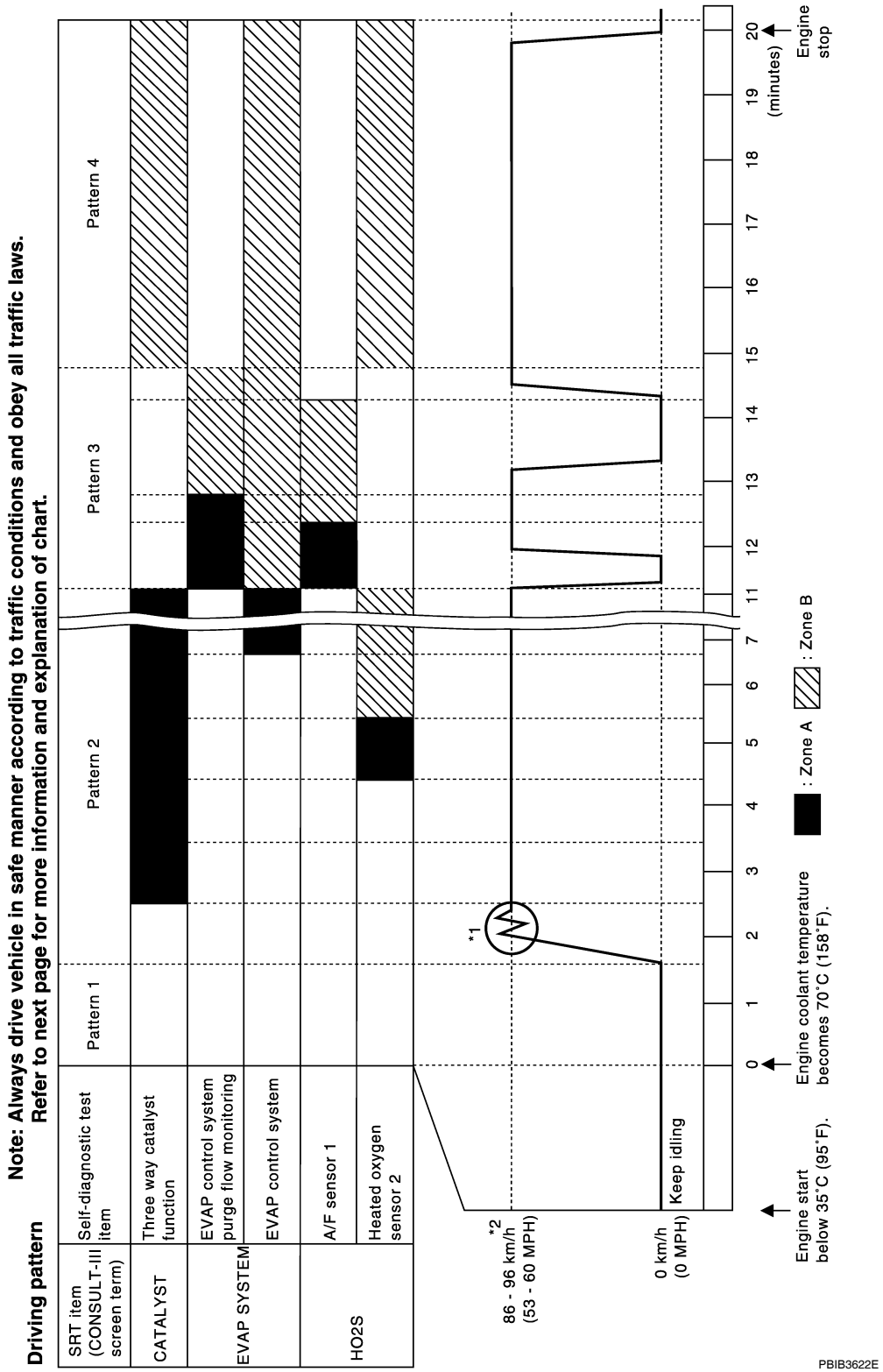

- The time required for each diagnosis varies with road surface conditions, weather, altitude, individual driving habits, etc.
  Zone A refers to the range where the time, required for the diagnosis under normal conditions*, is the shortest.
  Zone B refers to the range where the diagnosis can still be performed if the diagnosis is not completed within zone A.

*: Normal conditions refer to the following:

- Sea level
- Flat road
- Ambient air temperature: 20 - 30°C (68 - 86°F)
- Diagnosis is performed as quickly as possible under normal conditions.
  Under different conditions [For example: ambient air temperature other than 20 - 30°C (68 - 86°F)], diagnosis may also be performed.

Pattern 1:

- **The engine is started at the engine coolant temperature of −10 to 35°C (14 to 95°F) (where the voltage between the ECM terminal 73 and ground is 3.0 - 4.3V).**
- **The engine must be operated at idle speed until the engine coolant temperature is greater than 70°C (158°F) (where the voltage between the ECM terminal 73 and ground is lower than 1.4V).**
- **The engine is started at the fuel tank temperature of warmer than 0°C (32°F) (where the voltage between the ECM terminal 107 and ground is less than 4.1V).**

Pattern 2:

- When steady-state driving is performed again even after it is interrupted, each diagnosis can be conducted. In this case, the time required for diagnosis may be extended.

Pattern 3:

- Operate vehicle following the driving pattern shown in the figure.
- Release the accelerator pedal during decelerating vehicle speed from 90 km/h (56 MPH) to 0 km/h (0 MPH).

Pattern 4:

- The accelerator pedal must be held very steady during steady-state driving.
- If the accelerator pedal is moved, the test must be conducted all over again.

*1: Depress the accelerator pedal until vehicle speed is 90 km/h (56 MPH), then release the accelerator pedal and keep it released for more than 10 seconds. Depress the accelerator pedal until vehicle speed is 90 km/h (56 MPH) again.

*2: Checking the vehicle speed with GST is advised.

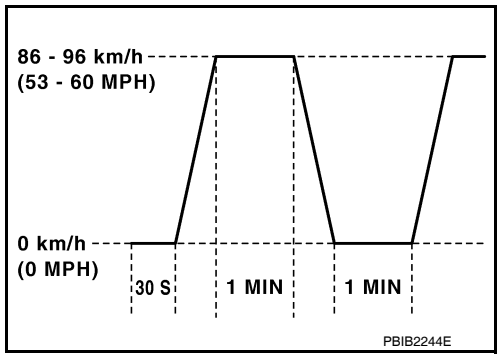

Suggested Transmission Gear Position

Set the selector lever in the D position with the overdrive switch turned ON.

TEST VALUE AND TEST LIMIT

The following is the information specified in Service $06 of SAE J1979.

The test value is a parameter used to determine whether a system/circuit diagnostic test is OK or NG while being monitored by the ECM during self-diagnosis. The test limit is a reference value which is specified as the maximum or minimum value and is compared with the test value being monitored.

These data (test value and test limit) are specified by On Boad Monitor ID(OBDMID), Test ID (TID), Unit and Scaling ID and can be displayed on the GST screen.

The items of the test value and test limit will be displayed with GST screen which items are provided by the ECM. (eg., if the bank 2 is not applied on this vehicle, only the items of the bank 1 is displayed)

Item	OBD-MID	Self-diagnostic test item	DTC	Test value and Test limit (GST display)		Description
				TID	Unit and Scaling ID	
HO2S	01H	Air fuel ratio (A/F) sensor 1 (Bank 1)	P0131	83H	0BH	Minimum sensor output voltage for test cycle
			P0131	84H	0BH	Maximum sensor output voltage for test cycle
			P0130	85H	0BH	Minimum sensor output voltage for test cycle
			P0130	86H	0BH	Maximum sensor output voltage for test cycle
			P0133	87H	04H	Response rate: Response ratio (Lean to Rich)
			P0133	88H	04H	Response rate: Response ratio (Rich to Lean)
			P2A00	89H	84H	The amount of shift in air fuel ratio
			P2A00	8AH	84H	The amount of shift in air fuel ratio
			P0130	8BH	0BH	Difference in sensor output voltage
			P0133	8CH	83H	Response gain at the limited frequency
	02H	Heated oxygen sensor 2 (Bank 1)	P0138	07H	0CH	Minimum sensor output voltage for test cycle
			P0137	08H	0CH	Maximum sensor output voltage for test cycle
			P0138	80H	0CH	Sensor output voltage
			P0139	81H	0CH	Difference in sensor output voltage
	03H	Heated oxygen sensor 3 (Bank 1)	P0143	07H	0CH	Minimum sensor output voltage for test cycle
			P0144	08H	0CH	Maximum sensor output voltage for test cycle
			P0146	80H	0CH	Sensor output voltage
			P0145	81H	0CH	Difference in sensor output voltage

Item	OBD-MID	Self-diagnostic test item	DTC	Test value and Test limit (GST display)		Description
				TID	Unit and Scaling ID	
HO2S	05H	Air fuel ratio (A/F) sensor 1 (Bank 2)	P0151	83H	0BH	Minimum sensor output voltage for test cycle
			P0151	84H	0BH	Maximum sensor output voltage for test cycle
			P0150	85H	0BH	Minimum sensor output voltage for test cycle
			P0150	86H	0BH	Maximum sensor output voltage for test cycle
			P0153	87H	04H	Response rate: Response ratio (Lean to Rich)
			P0153	88H	04H	Response rate: Response ratio (Rich to Lean)
			P2A03	89H	84H	The amount of shift in air fuel ratio
			P2A03	8AH	84H	The amount of shift in air fuel ratio
			P0150	8BH	0BH	Difference in sensor output voltage
			P0153	8CH	83H	Response gain at the limited frequency
	06H	Heated oxygen sensor 2 (Bank 2)	P0158	07H	0CH	Minimum sensor output voltage for test cycle
			P0157	08H	0CH	Maximum sensor output voltage for test cycle
			P0158	80H	0CH	Sensor output voltage
			P0159	81H	0CH	Difference in sensor output voltage
	07H	Heated oxygen sensor 3 (Bank2)	P0163	07H	0CH	Minimum sensor output voltage for test cycle
			P0164	08H	0CH	Maximum sensor output voltage for test cycle
			P0166	80H	0CH	Sensor output voltage
			P0165	81H	0CH	Difference in sensor output voltage
CATALYST	21H	Three way catalyst function (Bank1)	P0420	80H	01H	O2 storage index
			P0420	82H	01H	Switching time lag engine exhaust index value
			P2423	83H	0CH	Difference in 3rd O2 sensor output voltage
			P2423	84H	84H	O2 storage index in HC trap catalyst
	22H	Three way catalyst function (Bank2)	P0430	80H	01H	O2 storage index
			P0430	82H	01H	Switching time lag engine exhaust index value
			P2424	83H	0CH	Difference in 3rd O2 sensor output voltage
			P2424	84H	84H	O2 storage index in HC trap catalyst

Item	OBD-MID	Self-diagnostic test item	DTC	Test value and Test limit (GST display)		Description
				TID	Unit and Scaling ID	
EGR SYSTEM	31H	EGR function	P0400	80H	96H	Low Flow Faults: EGR temp change rate (short term)
			P0400	81H	96H	Low Flow Faults: EGR temp change rate (long term)
			P0400	82H	96H	Low Flow Faults: Difference between max EGR temp and EGR temp under idling condition
			P0400	83H	96H	Low Flow Faults: Max EGR temp
			P1402	84H	96H	High Flow Faults: EGR temp increase rate
EVAP SYSTEM	39H	EVAP control system leak (Cap Off)	P0455	80H	0CH	Difference in pressure sensor output voltage before and after pull down
	3BH	EVAP control system leak (Small leak)	P0442	80H	05H	Leak area index (for more than 0.04inch)
	3CH	EVAP control system (Very small leak)	P0456	80H	05H	Leak area index (for more than 0.02inch)
			P0456	81H	FDH	Maximum internal pressure of EVAP system during monitoring
	3DH	Purge flow system	P0441	83H	0CH	Difference in pressure sensor output voltage before and after vent control value close
O2 SENSOR HEATER	41H	A/F sensor 1 heater (Bank 1)	Low Input:P0031 High Input:P0032	81H	0BH	Converted value of Heater electric current to voltage
	42H	Heated oxygen sensor 2 (Bank 1)	Low Input:P0037 High Input:P0038	80H	0CH	Converted value of Heater electric current to voltage
	43H	Heated oxygen sensor 3 (Bank 1)	P0043	80H	0CH	Converted value of Heater electric current to voltage
	45H	A/F sensor 1 heater (Bank 2)	Low Input:P0051 High Input:P0052	81H	0BH	Converted value of Heater electric current to voltage
	46H	Heated oxygen sensor 2 (Bank 2)	Low Input:P0057 High Input:P0058	80H	0CH	Converted value of Heater electric current to voltage
	47H	Heated oxygen sensor 3 (Bank 2)	P0063	80H	0CH	Converted value of Heater electric current to voltage
SECONDARY AIR	71H	Secondary Air system	P0411	80H	01H	Secondary Air Injection System Incorrect Flow Detected
			Bank1: P0491 Bank2: P0492	81H	01H	Secondary Air Injection System Insufficient Flow
			P2445	82H	01H	Secondary Air Injection System Pump Stuck Off
			P2448	83H	01H	Secondary Air Injection System High Airflow
			Bank1: P2440 Bank2: P2442	84H	01H	Secondary Air Injection System Switching Valve Stuck Open
			P2440	85H	01H	Secondary Air Injection System Switching Valve Stuck Open
			P2444	86H	01H	Secondary Air Injection System Pump Stuck On

Item	OBD-MID	Self-diagnostic test item	DTC	Test value and Test limit (GST display)		Description
				TID	Unit and Scaling ID	
FUEL SYSTEM	81H	Fuel injection system function (Bank 1)	P0171 or P0172	80H	2FH	Long term fuel trim
			P0171 or P0172	81H	24H	The number of lambda control clamped
	82H	Fuel injection system function (Bank 2)	P0174 or P0175	80H	2FH	Long term fuel trim
			P0174 or P0175	81H	24H	The number of lambda control clamped

Item	OBD-MID	Self-diagnostic test item	DTC	Test value and Test limit (GST display)		Description
				TID	Unit and Scaling ID	
MISFIRE	A1H	Multiple Cylinder Misfire	P0301	80H	24H	Misfiring counter at 1000rev of the first cylinder
			P0302	81H	24H	Misfiring counter at 1000rev of the second cylinder
			P0303	82H	24H	Misfiring counter at 1000rev of the third cylinder
			P0304	83H	24H	Misfiring counter at 1000rev of the fourth cylinder
			P0305	84H	24H	Misfiring counter at 1000rev of the fifth cylinder
			P0306	85H	24H	Misfiring counter at 1000rev of the sixth cylinder
			P0307	86H	24H	Misfiring counter at 1000rev of the seventh cylinder
			P0308	87H	24H	Misfiring counter at 1000rev of the eighth cylinder
			P0300	88H	24H	Misfiring counter at 1000rev of the multiple cylinders
			P0301	89H	24H	Misfiring counter at 200rev of the first cylinder
			P0302	8AH	24H	Misfiring counter at 200rev of the second cylinder
			P0303	8BH	24H	Misfiring counter at 200rev of the third cylinder
			P0304	8CH	24H	Misfiring counter at 200rev of the fourth cylinder
			P0305	8DH	24H	Misfiring counter at 200rev of the fifth cylinder
			P0306	8EH	24H	Misfiring counter at 200rev of the fifth cylinder
			P0307	8FH	24H	Misfiring counter at 200rev of the fifth cylinder
			P0308	90H	24H	Misfiring counter at 200rev of the fifth cylinder
			P0300	91H	24H	Misfiring counter at 1000rev of the single cylinder
			P0300	92H	24H	Misfiring counter at 200rev of the single cylinder
			P0300	93H	24H	Misfiring counter at 200rev of the multiple cylinders
	A2H	No.1 Cylinder Misfire	P0301	0BH	24H	EWMA (Exponential Weighted Moving Average) misfire counts for last 10 driving cycles
			P0301	0CH	24H	Misfire counts for last/current driving cycles

Item	OBD-MID	Self-diagnostic test item	DTC	Test value and Test limit (GST display)		Description
				TID	Unit and Scaling ID	
MISFIRE	A3H	No.2 Cylinder Misfire	P0302	0BH	24H	EWMA (Exponential Weighted Moving Average) misfire counts for last 10 driving cycles
			P0302	0CH	24H	Misfire counts for last/current driving cycles
	A4H	No.3 Cylinder Misfire	P0303	0BH	24H	EWMA (Exponential Weighted Moving Average) misfire counts for last 10 driving cycles
			P0303	0CH	24H	Misfire counts for last/current driving cycles
	A5H	No.4 Cylinder Misfire	P0304	0BH	24H	EWMA (Exponential Weighted Moving Average) misfire counts for last 10 driving cycles
			P0304	0CH	24H	Misfire counts for last/current driving cycles
	A6H	No.5 Cylinder Misfire	P0305	0BH	24H	EWMA (Exponential Weighted Moving Average) misfire counts for last 10 driving cycles
			P0305	0CH	24H	Misfire counts for last/current driving cycles
	A7H	No.6 Cylinder Misfire	P0306	0BH	24H	EWMA (Exponential Weighted Moving Average) misfire counts for last 10 driving cycles
			P0306	0CH	24H	Misfire counts for last/current driving cycles
	A8H	No.7 Cylinder Misfire	P0307	0BH	24H	EWMA (Exponential Weighted Moving Average) misfire counts for last 10 driving cycles
			P0307	0CH	24H	Misfire counts for last/current driving cycles
	A9H	No.8 Cylinder Misfire	P0308	0BH	24H	EWMA (Exponential Weighted Moving Average) misfire counts for last 10 driving cycles
			P0308	0CH	24H	Misfire counts for last/current driving cycles

HOW TO ERASE EMISSION-RELATED DIAGNOSTIC INFORMATION

How to Erase DTC

WITH CONSULT-III

The emission related diagnostic information in the ECM can be erased by selecting “All Erase” in the “Description” of “FINAL CHECK” mode with CONSULT-III.

WITH GST

The emission related diagnostic information in the ECM can be erased by selecting Service $04 with GST.

NOTE:

If the DTC is not for A/T related items (see EC-462, "DTC Index"), skip step 2.

1. If the ignition switch stays ON after repair work, be sure to turn ignition switch OFF once. Wait at least 10 seconds and then turn it ON (engine stopped) again.
2. Perform TM-30, "OBD-II Diagnostic Trouble Code (DTC)". (The DTC in TCM will be erased)
3. Select Service $04 with GST (Generic Scan Tool).

No Tools

NOTE:

If the DTC is not for AT related items (see EC-462, "DTC Index"), skip step 2.

1. If the ignition switch stays ON after repair work, be sure to turn ignition switch OFF once. Wait at least 10 seconds and then turn it ON (engine stopped) again.
2. Perform TM-30, "OBD-II Diagnostic Trouble Code (DTC)". (The DTC in the TCM will be erased.)
3. Change the diagnostic test mode from Mode II to Mode I by depressing the accelerator pedal. Refer to EC-55, "Malfunction Indicator Lamp (MIL)".

- **If the battery is disconnected, the emission-related diagnostic information will be lost within 24 hours.**
- **The following data are cleared when the ECM memory is erased.**

- Diagnostic trouble codes
- 1st trip diagnostic trouble codes
- Freeze frame data
- 1st trip freeze frame data
- System readiness test (SRT) codes
- Test values

Actual work procedures are explained using a DTC as an example. Be careful so that not only the DTC, but all of the data listed above, are cleared from the ECM memory during work procedures.

Malfunction Indicator Lamp (MIL)

INFOID:0000000001351326

DESCRIPTION

The MIL is located on the instrument panel.

1. The MIL will light up when the ignition switch is turned ON without the engine running. This is a bulb check.
   If the MIL does not light up, refer to MWI-18 or see EC-41.
2. When the engine is started, the MIL should go off.
   If the MIL remains on, the on board diagnostic system has detected an engine system malfunction.

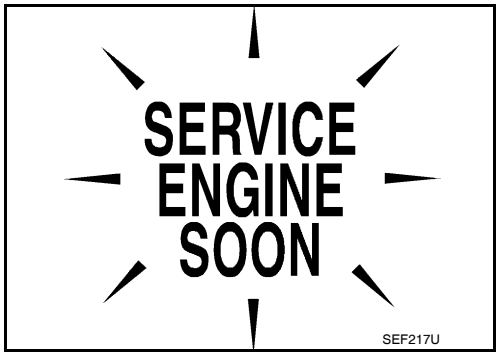

ON BOARD DIAGNOSTIC SYSTEM FUNCTION

The on board diagnostic system has the following three functions.

Diagnostic Test Mode	KEY and ENG. Status	Function	Explanation of Function
Mode I	Ignition switch in ON position Engine stopped	BULB CHECK	This function checks the MIL bulb for damage (blown, open circuit, etc.). If the MIL does not come on, check MIL circuit.
	Engine running	MALFUNCTION WARNING	This is a usual driving condition. When a malfunction is detected twice in two consecutive driving cycles (two trip detection logic), the MIL will light up to inform the driver that a malfunction has been detected. The following malfunctions will light up or blink the MIL in the 1st trip. • Misfire (Possible three way catalyst damage) • One trip detection diagnoses
Mode II	Ignition switch in ON position Engine stopped	SELF-DIAGNOSTIC RESULTS	This function allows DTCs and 1st trip DTCs to be read.

When there is an open circuit on MIL circuit, the ECM cannot warn the driver by lighting up MIL when there is malfunction on engine control system.
Therefore, when electrical controlled throttle and part of ECM related diagnoses are continuously detected as NG for 5 trips, ECM warns the driver that engine control system malfunctions and MIL circuit is open by means of operating fail-safe function.
The fail-safe function also operates when above diagnoses except MIL circuit are detected and demands the driver to repair the malfunction.

Engine operating condition in fail-safe mode	Engine speed will not rise more than 2,500 rpm due to the fuel cut

MIL Flashing Without DTC
When any SRT codes are not set, MIL may flash without DTC. For the details, refer to EC-462, "DTC Index".

HOW TO SWITCH DIAGNOSTIC TEST MODE

NOTE:
- **It is better to count the time accurately with a clock.**
- **It is impossible to switch the diagnostic mode when an accelerator pedal position sensor circuit has a malfunction.**
- **Always ECM returns to Diagnostic Test Mode I after ignition switch is turned OFF.**

How to Set Diagnostic Test Mode II (Self-diagnostic Results)

1. Confirm that accelerator pedal is fully released, turn ignition switch ON and wait 3 seconds.
2. Repeat the following procedure quickly five times within 5 seconds.

a. Fully depress the accelerator pedal.
b. Fully release the accelerator pedal.

3. Wait 7 seconds, fully depress the accelerator pedal and keep it for approx. 10 seconds until the MIL starts blinking.
   NOTE:
   Do not release the accelerator pedal for 10 seconds if MIL may start blinking on the halfway of this 10 seconds. This blinking is displaying SRT status and is continued for another 10 seconds. For the details, refer to EC-462, "DTC Index".

4. Fully release the accelerator pedal.
   ECM has entered to Diagnostic Test Mode II (Self-diagnostic results).
   NOTE:
   Wait until the same DTC (or 1st trip DTC) appears to confirm all DTCs certainly.

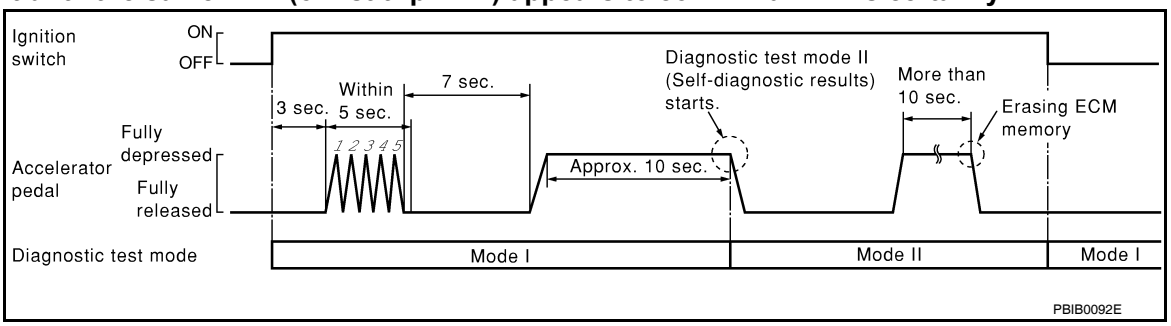

How to Erase Diagnostic Test Mode II (Self-diagnostic Results)

1. Set ECM in Diagnostic Test Mode II (Self-diagnostic results). Refer to "How to Set Diagnostic Test Mode II (Self-diagnostic Results)".
2. Fully depress the accelerator pedal and keep it for more than 10 seconds.
   The emission-related diagnostic information has been erased from the backup memory in the ECM.
3. Fully release the accelerator pedal, and confirm the DTC 0000 is displayed.

DIAGNOSTIC TEST MODE I — BULB CHECK

In this mode, the MIL on the instrument panel should stay ON. If it remains OFF, check the bulb. Refer to MWI-18 or see EC-41.

DIAGNOSTIC TEST MODE I — MALFUNCTION WARNING

MIL	Condition
ON	When the malfunction is detected.
OFF	No malfunction.

This DTC number is clarified in Diagnostic Test Mode II (SELF-DIAGNOSTIC RESULTS)

DIAGNOSTIC TEST MODE II — SELF-DIAGNOSTIC RESULTS

In this mode, the DTC and 1st trip DTC are indicated by the number of blinks of the MIL as shown below.
The DTC and 1st trip DTC are displayed at the same time. If the MIL does not illuminate in diagnostic test mode I (Malfunction warning), all displayed items are 1st trip DTCs. If only one code is displayed when the MIL illuminates in diagnostic test mode II (SELF-DIAGNOSTIC RESULTS), it is a DTC; if two or more codes are displayed, they may be either DTCs or 1st trip DTCs. DTC No. is same as that of 1st trip DTC. These uniden-

tified codes can be identified by using the CONSULT-III or GST. A DTC will be used as an example for how to read a code.

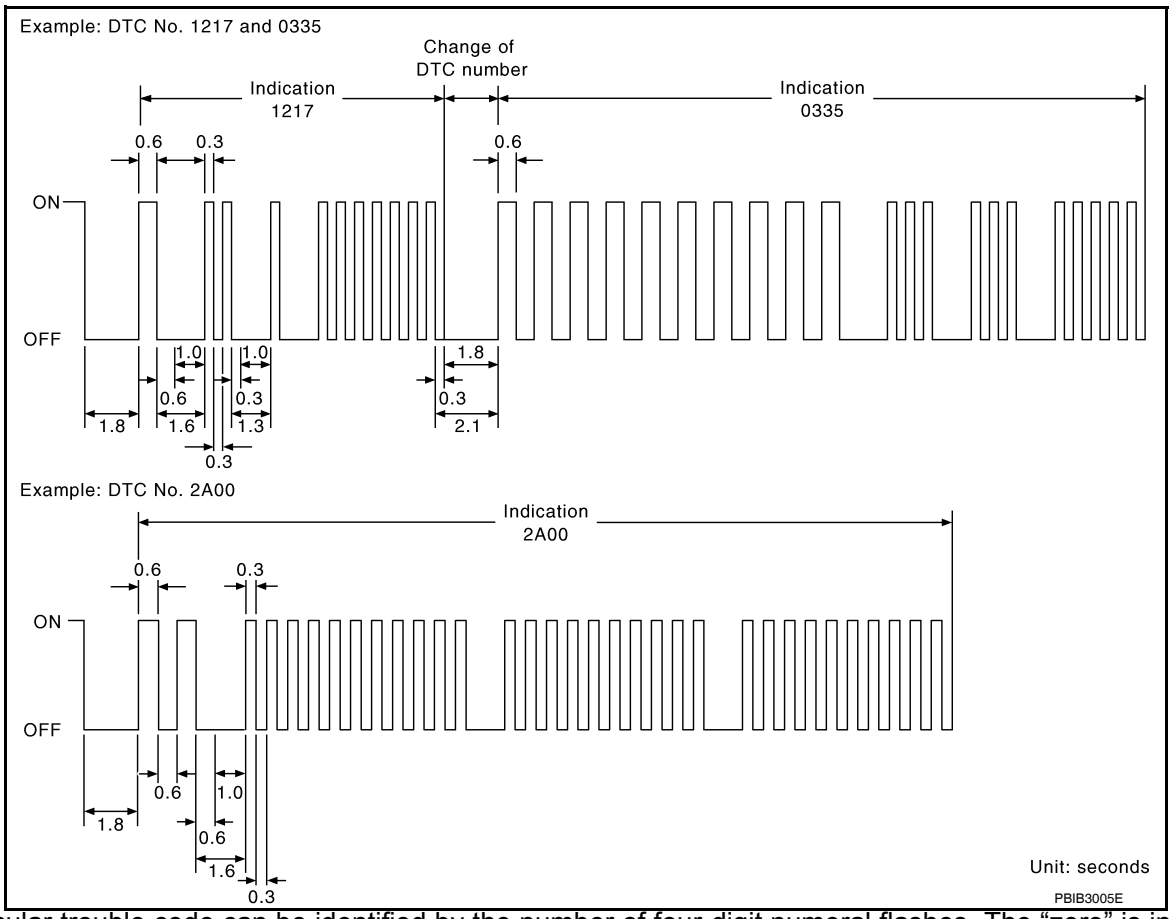

A particular trouble code can be identified by the number of four-digit numeral flashes. The “zero” is indicated by the number of ten flashes. The “A” is indicated by the number of eleven flash.The length of time the 1,000th-digit numeral flashes on and off is 1.2 seconds consisting of an ON (0.6-second) - OFF (0.6-second) cycle.

The 100th-digit numeral and lower digit numerals consist of a 0.3-second ON and 0.3-second OFF cycle.

A change from one digit numeral to another occurs at an interval of 1.0-second OFF. In other words, the later numeral appears on the display 1.3 seconds after the former numeral has disappeared.

A change from one trouble code to another occurs at an interval of 1.8-second OFF.

In this way, all the detected malfunctions are classified by their DTC numbers. The DTC 0000 refers to no malfunction. (See EC-462, "DTC Index")

How to Erase Diagnostic Test Mode II (Self-diagnostic Results)

The DTC can be erased from the back up memory in the ECM by depressing accelerator pedal. Refer to "How to Erase Diagnostic Test Mode II (Self-diagnostic Results)".

- **If the battery is disconnected, the DTC will be lost from the backup memory within 24 hours.**
- **Be careful not to erase the stored memory before starting trouble diagnoses.**

OBD System Operation Chart

INFOID:0000000001351327

RELATIONSHIP BETWEEN MIL, 1ST TRIP DTC, DTC, AND DETECTABLE ITEMS

- When a malfunction is detected for the first time, the 1st trip DTC and the 1st trip freeze frame data are stored in the ECM memory.
- When the same malfunction is detected in two consecutive trips, the DTC and the freeze frame data are stored in the ECM memory, and the MIL will come on. For details, refer to EC-41, "Two Trip Detection Logic".
- The MIL will go off after the vehicle is driven 3 times (driving pattern B) with no malfunction. The drive is counted only when the recorded driving pattern is met (as stored in the ECM). If another malfunction occurs while counting, the counter will reset.
- The DTC and the freeze frame data will be stored until the vehicle is driven 40 times (driving pattern A) without the same malfunction recurring (except for Misfire and Fuel Injection System). For Misfire and Fuel Injection System, the DTC and freeze frame data will be stored until the vehicle is driven 80 times (driving pattern

C) without the same malfunction recurring. The “TIME” in “SELF-DIAGNOSTIC RESULTS” mode of CONSULT-III will count the number of times the vehicle is driven.

- The 1st trip DTC is not displayed when the self-diagnosis results in OK for the 2nd trip.

SUMMARY CHART

Items	Fuel Injection System	Misfire	Other
MIL (goes off)	3 (pattern B)	3 (pattern B)	3 (pattern B)
DTC, Freeze Frame Data (no display)	80 (pattern C)	80 (pattern C)	40 (pattern A)
1st Trip DTC (clear)	1 (pattern C), *1	1 (pattern C), *1	1 (pattern B)
1st Trip Freeze Frame Data (clear)	*1, *2	*1, *2	1 (pattern B)

For details about patterns B and C under “Fuel Injection System” and “Misfire”, see "EXPLANATION FOR DRIVING PATTERNS FOR “MISFIRE <EXHAUST QUALITY DETERIORATION>”, “FUEL INJECTION SYSTEM”".

For details about patterns A and B under Other, see "EXPLANATION FOR DRIVING PATTERNS FOR “MISFIRE <EXHAUST QUALITY DETERIORATION>”, “FUEL INJECTION SYSTEM”".

*1: Clear timing is at the moment OK is detected.

*2: Clear timing is when the same malfunction is detected in the 2nd trip.

RELATIONSHIP BETWEEN MIL, DTC, 1ST TRIP DTC AND DRIVING PATTERNS FOR “MISFIRE ” <EXHAUST QUALITY DETERIORATION>, “FUEL INJECTION SYSTEM”

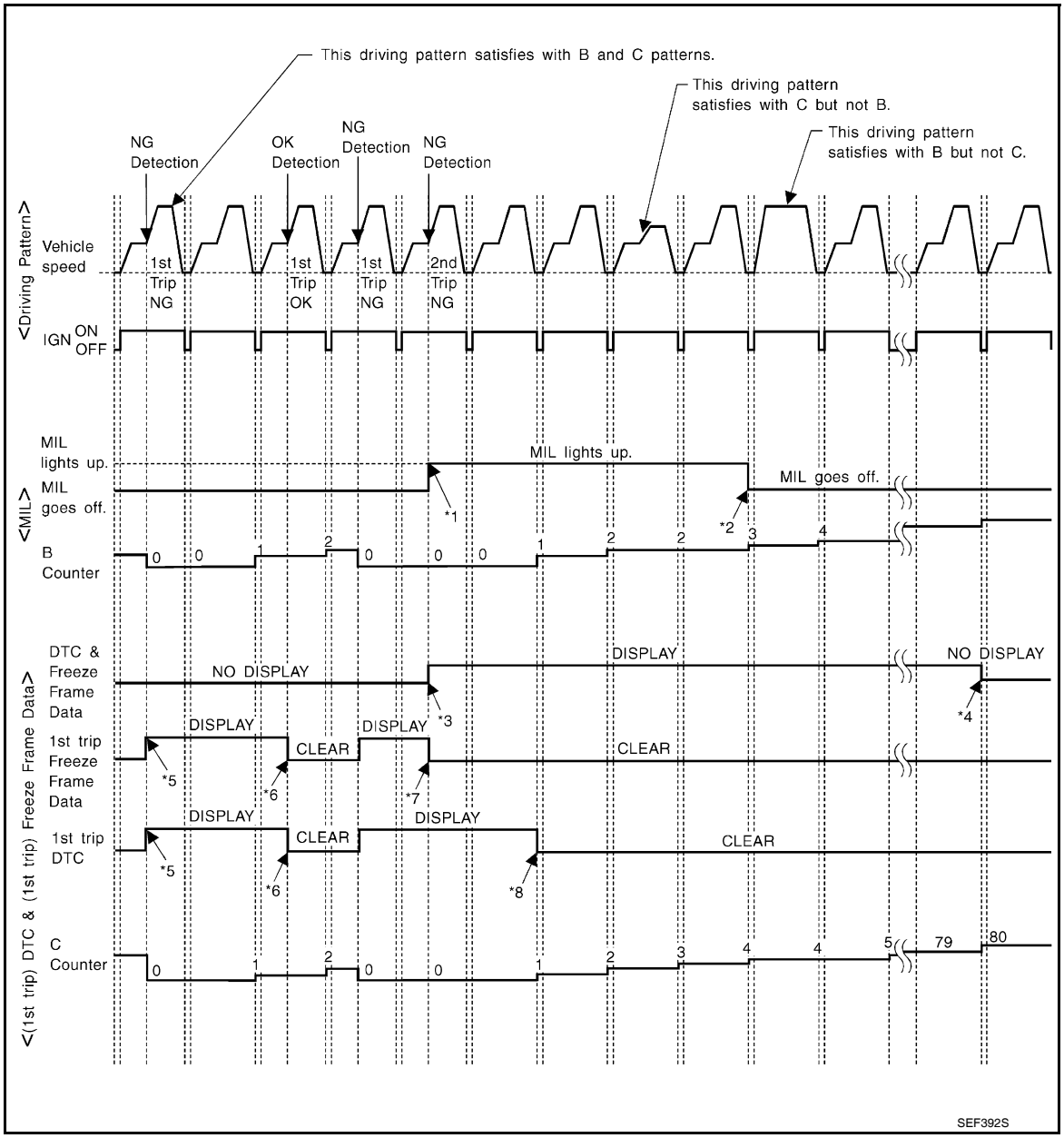

*1: When the same malfunction is detected in two consecutive trips, MIL will light up.

*2: MIL will go off after vehicle is driven 3 times (pattern B) without any malfunctions.

*3: When the same malfunction is detected in two consecutive trips, the DTC and the freeze frame data will be stored in ECM.

*4: The DTC and the freeze frame data will not be displayed any longer after vehicle is driven 80 times (pattern C) without the same malfunction. (The DTC and the freeze frame data still remain in ECM.)

*5: When a malfunction is detected for the first time, the 1st trip DTC and the 1st trip freeze frame data will be stored in ECM.

*6: The 1st trip DTC and the 1st trip freeze frame data will be cleared at the moment OK is detected.

*7: When the same malfunction is detected in the 2nd trip, the 1st trip freeze frame data will be cleared.

*8: 1st trip DTC will be cleared when vehicle is driven once (pattern C) without the same malfunction after DTC is stored in ECM.

EXPLANATION FOR DRIVING PATTERNS FOR “MISFIRE <EXHAUST QUALITY DETERIORATION>”, “FUEL INJECTION SYSTEM”

<Driving Pattern B>

Driving pattern B means the vehicle operation as follows:

All components and systems should be monitored at least once by the OBD system.
- The B counter will be cleared when the malfunction is detected once regardless of the driving pattern.
- The B counter will be counted up when driving pattern B is satisfied without any malfunction.
- The MIL will go off when the B counter reaches 3. (*2 in “OBD SYSTEM OPERATION CHART”)

<Driving Pattern C>
Driving pattern C means the vehicle operation as follows:
The following conditions should be satisfied at the same time:
Engine speed: (Engine speed in the freeze frame data) ±375 rpm
Calculated load value: (Calculated load value in the freeze frame data) x (1±0.1) [%]
Engine coolant temperature (T) condition:
- When the freeze frame data shows lower than 70°C (158°F), T should be lower than 70°C (158°F).
- When the freeze frame data shows higher than or equal to 70°C (158°F), T should be higher than or equal to 70°C (158°F).

Example:
If the stored freeze frame data is as follows:
Engine speed: 850 rpm, Calculated load value: 30%, Engine coolant temperature: 80°C (176°F)
To be satisfied with driving pattern C, the vehicle should run under the following conditions:
Engine speed: 475 - 1,225 rpm, Calculated load value: 27 - 33%, Engine coolant temperature: more than 70°C (158°F)
- The C counter will be cleared when the malfunction is detected regardless of vehicle conditions above.
- The C counter will be counted up when vehicle conditions above is satisfied without the same malfunction.
- The DTC will not be displayed after C counter reaches 80.
- The 1st trip DTC will be cleared when C counter is counted once without the same malfunction after DTC is stored in ECM.

RELATIONSHIP BETWEEN MIL, DTC, 1ST TRIP DTC AND DRIVING PATTERNS EXCEPT FOR “MISFIRE <EXHAUST QUALITY DETERIORATION>”, “FUEL INJECTION SYSTEM”

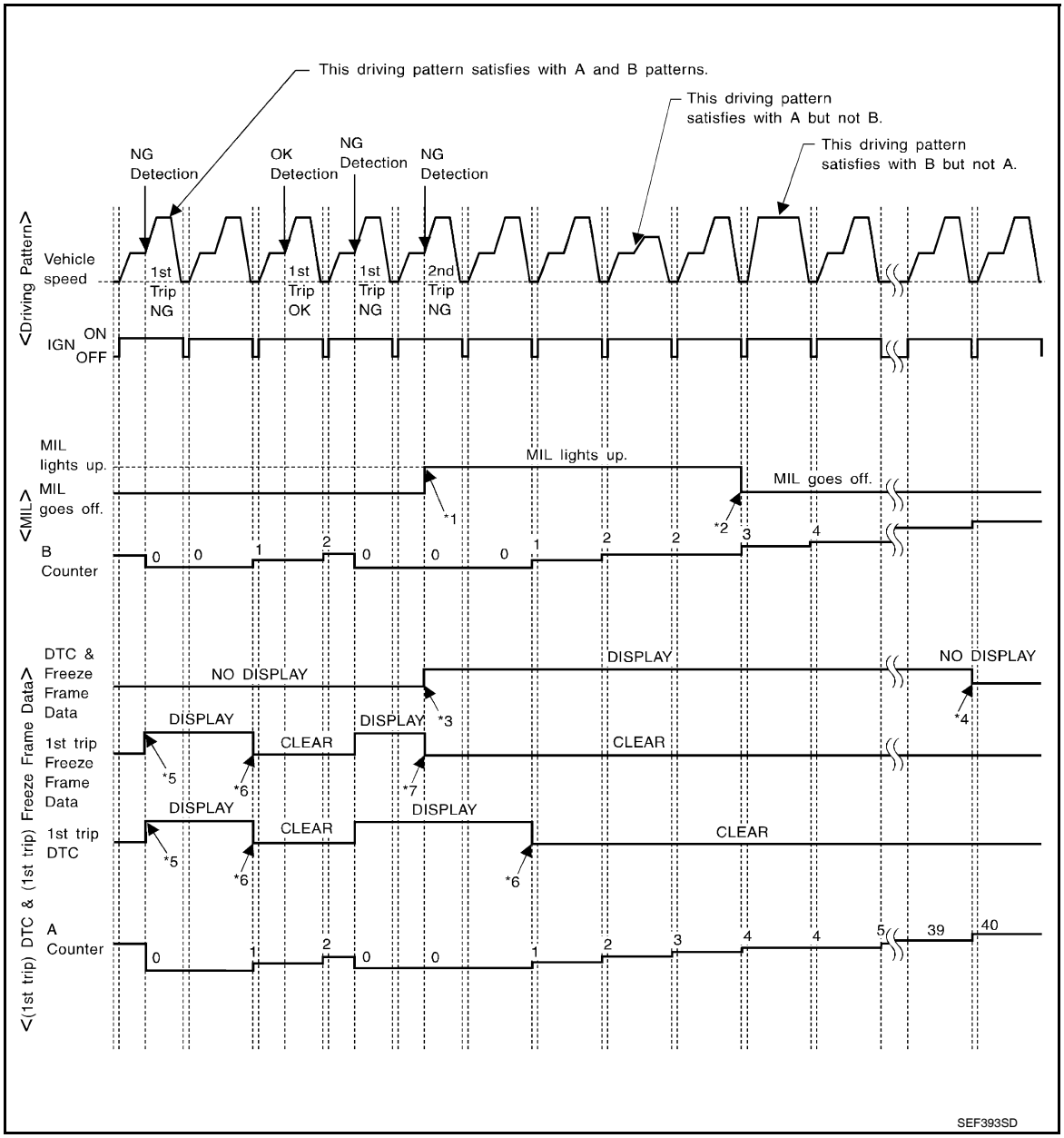

*1: When the same malfunction is detected in two consecutive trips, MIL will light up.

*2: MIL will go off after vehicle is driven 3 times (pattern B) without any malfunctions.

*3: When the same malfunction is detected in two consecutive trips, the DTC and the freeze frame data will be stored in ECM.

*4: The DTC and the freeze frame data will not be displayed any longer after vehicle is driven 40 times (pattern A) without the same malfunction. (The DTC and the freeze frame data still remain in ECM.)

*5: When a malfunction is detected for the first time, the 1st trip DTC and the 1st trip freeze frame data will be stored in ECM.

*6: 1st trip DTC will be cleared after vehicle is driven once (pattern B) without the same malfunction.

*7: When the same malfunction is detected in the 2nd trip, the 1st trip freeze frame data will be cleared.

EXPLANATION FOR DRIVING PATTERNS EXCEPT FOR “MISFIRE <EXHAUST QUALITY DETERIORATION>”, “FUEL INJECTION SYSTEM”

<Driving Pattern A>

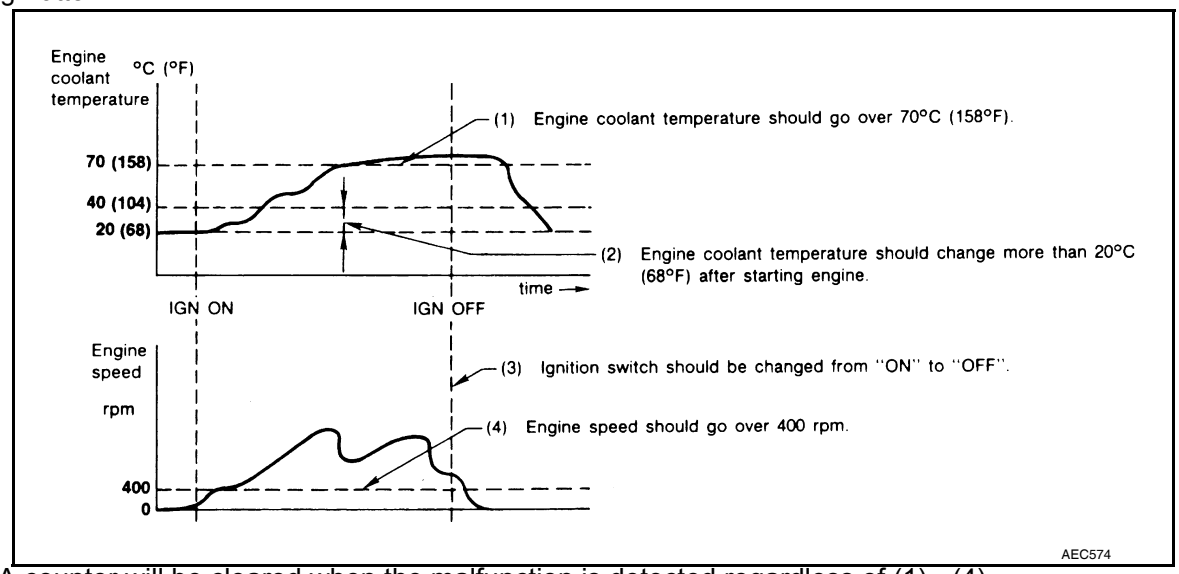

- The A counter will be cleared when the malfunction is detected regardless of (1) - (4).
- The A counter will be counted up when (1) - (4) are satisfied without the same malfunction.
- The DTC will not be displayed after the A counter reaches 40.

<Driving Pattern B>

Driving pattern B means the vehicle operation as follows:
All components and systems should be monitored at least once by the OBD system.

- The B counter will be cleared when the malfunction is detected once regardless of the driving pattern.
- The B counter will be counted up when driving pattern B is satisfied without any malfunctions.
- The MIL will go off when the B counter reaches 3 (*2 in OBD SYSTEM OPERATION CHART).

CONSULT-III Function (ENGINE)

INFOID:0000000001351348

FUNCTION

Diagnostic test mode	Function
Work support	This mode enables a technician to adjust some devices faster and more accurately by following the indications on the CONSULT-III unit.
Self-diagnostic results	Self-diagnostic results such as 1st trip DTC, DTCs and 1st trip freeze frame data or freeze frame data can be read and erased quickly.*
Data monitor	Input/Output data in the ECM can be read.
Active test	Diagnostic Test Mode in which CONSULT-III drives some actuators apart from the ECMs and also shifts some parameters in a specified range.
Function test	This mode is used to inform customers when their vehicle condition requires periodic maintenance.
DTC & SRT confirmation	The status of system monitoring tests and the self-diagnosis status/result can be confirmed.
ECU Identification	ECM part number can be read.

*: The following emission-related diagnostic information is cleared when the ECM memory is erased.

- Diagnostic trouble codes
- 1st trip diagnostic trouble codes
- Freeze frame data
- 1st trip freeze frame data
- System readiness test (SRT) codes
- Test values

ENGINE CONTROL COMPONENT PARTS/CONTROL SYSTEMS APPLICATION

Item			DIAGNOSTIC TEST MODE						
			WORK SUPPORT	SELF-DIAGNOSTIC RESULTS		DATA MONITOR	ACTIVE TEST	DTC & SRT CONFIRMATION	
				DTC*1	FREEZE FRAME DATA*2			SRT STATUS	DTC WORK SUPPORT
ENGINE CONTROL COMPONENT PARTS	INPUT	Crankshaft position sensor (POS)		×	×	×			
		Camshaft position sensor (PHASE)		×	×	×			
		Mass air flow sensor		×		×			
		Engine coolant temperature sensor		×	×	×	×		
		Air fuel ratio (A/F) sensor 1		×		×		×	×
		Heated oxygen sensor 2		×		×		×	×
		Wheel sensor		×	×	×			
		Accelerator pedal position sensor		×		×			
		Throttle position sensor		×	×	×			
		Fuel tank temperature sensor		×		×	×		
		EVAP control system pressure sensor		×		×			
		Intake air temperature sensor		×	×	×			
		Knock sensor		×					
		Refrigerant pressure sensor				×			
		Closed throttle position switch (accelerator pedal position sensor signal)				×			
		Air conditioner switch				×			
		Park/neutral position (PNP) signal		×		×			
		Stop lamp switch		×		×			
		Power steering pressure sensor		×		×			
		Battery voltage				×			
		Load signal				×			
		Intake valve timing control position sensor		×		×			
		Fuel level sensor		×		×			
		Battery current sensor		×		×			
		ICC steering switch		×		×			
		ASCD steering switch		×		×			
		ICC brake switch		×		×			
		ASCD brake switch		×		×			

Item			DIAGNOSTIC TEST MODE						
			WORK SUPPORT	SELF-DIAGNOSTIC RESULTS		DATA MONITOR	ACTIVE TEST	DTC & SRT CONFIRMATION	
				DTC*1	FREEZE FRAME DATA*2			SRT STATUS	DTC WORK SUPPORT
ENGINE CONTROL COMPONENT PARTS	OUTPUT	Fuel injector				×	×		
		Power transistor (Ignition timing)				×	×		
		Throttle control motor relay		×		×			
		Throttle control motor		×					
		EVAP canister purge volume control solenoid valve		×		×	×		×
		Air conditioner relay				×			
		Fuel pump relay	×			×	×		
		Cooling fan relay		×		×	×		
		Air fuel ratio (A/F) sensor 1 heater		×		×		×*3	
		Heated oxygen sensor 2 heater		×		×		×*3	
		EVAP canister vent control valve	×	×		×	×		
		Intake valve timing control solenoid valve		×		×	×		
		Alternator				×	×		
		Calculated load value			×	×			

X: Applicable

*1: This item includes 1st trip DTCs.

*2: This mode includes 1st trip freeze frame data or freeze frame data. The items appear on CONSULT-III screen in freeze frame data mode only if a 1st trip DTC or DTC is detected. For details, refer to "Freeze Frame Data and 1st Trip Freeze Frame Data".

*3: Always “CMPLT” is displayed.

WORK SUPPORT MODE

Work Item

WORK ITEM	CONDITION	USAGE
FUEL PRESSURE RELEASE	• FUEL PUMP WILL STOP BY TOUCHING “START” DURING IDLING. CRANK A FEW TIMES AFTER ENGINE STALLS.	When releasing fuel pressure from fuel line
IDLE AIR VOL LEARN	• THE IDLE AIR VOLUME THAT KEEPS THE ENGINE WITHIN THE SPECIFIED RANGE IS MEMORIZED IN ECM.	When learning the idle air volume
SELF-LEARNING CONT	• THE COEFFICIENT OF SELF-LEARNING CONTROL MIXTURE RATIO RETURNS TO THE ORIGINAL COEFFICIENT.	When clearing the coefficient of self-learning control value

WORK ITEM	CONDITION	USAGE
EVAP SYSTEM CLOSE	CLOSE THE EVAP CANISTER VENT CONTROL VALVE IN ORDER TO MAKE EVAP SYSTEM CLOSE UNDER THE FOLLOWING CONDITIONS. • IGN SW ON • ENGINE NOT RUNNING • AMBIENT TEMPERATURE IS ABOVE 0°C (32°F). • NO VACUUM AND NO HIGH PRESSURE IN EVAP SYSTEM • FUEL TANK TEMP. IS MORE THAN 0°C (32°F). • WITHIN 10 MINUTES AFTER STARTING “EVAP SYSTEM CLOSE” • WHEN TRYING TO EXECUTE “EVAP SYSTEM CLOSE” UNDER THE CONDITION EXCEPT ABOVE, CONSULT-III WILL DISCONTINUE IT AND DISPLAY APPROPRIATE INSTRUCTION. **NOTE:** **WHEN STARTING ENGINE, CONSULT-III MAY DISPLAY “BATTERY VOLTAGE IS LOW. CHARGE BATTERY”, EVEN IN USING CHARGED BATTERY.**	When detecting EVAP vapor leak point of EVAP system
VIN REGISTRATION	• IN THIS MODE, VIN IS REGISTERED IN ECM	When registering VIN in ECM
TARGET IDLE RPM ADJ*	• IDLE CONDITION	When setting target idle speed
TARGET IGN TIM ADJ*	• IDLE CONDITION	When adjusting target ignition timing

*: This function is not necessary in the usual service procedure.

SELF-DIAG RESULTS MODE

Self Diagnostic Item

Regarding items of DTC and 1st trip DTC, refer to EC-462, "DTC Index".

Freeze Frame Data and 1st Trip Freeze Frame Data

Freeze frame data item*	Description
DIAG TROUBLE CODE [PXXXX]	• The engine control component part/control system has a trouble code, it is displayed as PXXXX. (Refer to EC-462, "DTC Index".)
FUEL SYS-B1	• “Fuel injection system status” at the moment a malfunction is detected is displayed. • One mode in the following is displayed. Mode2: Open loop due to detected system malfunction Mode3: Open loop due to driving conditions (power enrichment, deceleration enleanment) Mode4: Closed loop - using oxygen sensor(s) as feedback for fuel control Mode5: Open loop - has not yet satisfied condition to go to closed loop
FUEL SYS-B2	
CAL/LD VALUE [%]	• The calculated load value at the moment a malfunction is detected is displayed.
COOLANT TEMP [°C] or [°F]	• The engine coolant temperature at the moment a malfunction is detected is displayed.
L-FUEL TRM-B1 [%]	• “Long-term fuel trim” at the moment a malfunction is detected is displayed. • The long-term fuel trim indicates much more gradual feedback compensation to the base fuel schedule than short-term fuel trim.
L-FUEL TRM-B2 [%]	
S-FUEL TRM-B1 [%]	• “Short-term fuel trim” at the moment a malfunction is detected is displayed. • The short-term fuel trim indicates dynamic or instantaneous feedback compensation to the base fuel schedule.
S-FUEL TRM-B2 [%]	
ENGINE SPEED [rpm]	• The engine speed at the moment a malfunction is detected is displayed.
VEHICL SPEED [km/h] or [mph]	• The vehicle speed at the moment a malfunction is detected is displayed.
ABSOL TH-P/S [%]	• The throttle valve opening at the moment a malfunction is detected is displayed.
B/FUEL SCHDL [msec]	• The base fuel schedule at the moment a malfunction is detected is displayed.

Freeze frame data item*	Description
INT/A TEMP SE [°C] or [°F]	• The intake air temperature at the moment a malfunction is detected is displayed.
INT MANI PRES [kPa]	These items are displayed but are not applicable to this model.
FTFMCH1	

*: The item is the same as that of 1st trip freeze frame data.

DATA MONITOR MODE

Monitored Item

×: Applicable

Monitored item [Unit]	ECM INPUT SIGNALS	MAIN SIGNALS	Description	Remarks
ENG SPEED [rpm]	×	×	• Indicates the engine speed computed from the signal of the crankshaft position sensor (POS) and camshaft position sensor (PHASE).	• Accuracy becomes poor if engine speed drops below the idle rpm. • If the signal is interrupted while the engine is running, an abnormal value may be indicated.
MAS A/F SE-B1 [V]	×	×	• The signal voltage of the mass air flow sensor is displayed.	• When the engine is stopped, a certain value is indicated. • When engine is running specification range is indicated in “SPEC”.
B/FUEL SCHDL [msec]		×	• Base fuel schedule indicates the fuel injection pulse width programmed into ECM, prior to any learned on board correction.	• When engine is running specification range is indicated in “SPEC”.
A/F ALPHA-B1 [%]		×	• The mean value of the air-fuel ratio feedback correction factor per cycle is indicated.	• When the engine is stopped, a certain value is indicated. • When engine is running specification range is indicated in “SPEC”. • This data also includes the data for the air-fuel ratio learning control.
A/F ALPHA-B2 [%]		×		
COOLAN TEMP/S [°C] or [°F]	×	×	• The engine coolant temperature (determined by the signal voltage of the engine coolant temperature sensor) is displayed.	• When the engine coolant temperature sensor is open or short-circuited, ECM enters fail-safe mode. The engine coolant temperature determined by the ECM is displayed.
A/F SEN1 (B1) [V]	×	×	• The A/F signal computed from the input signal of the A/F sensor 1 is displayed.	
A/F SEN1 (B2) [V]	×			
HO2S2 (B1) [V]	×		• The signal voltage of the heated oxygen sensor 2 is displayed.	
HO2S2 (B2) [V]	×			
HO2S2 MNTR (B1) [RICH/LEAN]	×		• Display of heated oxygen sensor 2 signal: RICH: means the amount of oxygen after three way catalyst is relatively small. LEAN: means the amount of oxygen after three way catalyst is relatively large.	• When the engine is stopped, a certain value is indicated.
HO2S2 MNTR (B2) [RICH/LEAN]	×			
VHCL SPEED SE [km/h] or [mph]	×	×	• The vehicle speed computed from the vehicle speed signal sent from combination meter is displayed.	
BATTERY VOLT [V]	×	×	• The power supply voltage of ECM is displayed.	
ACCEL SEN 1 [V]	×	×	• The accelerator pedal position sensor signal voltage is displayed.	• ACCEL SEN 2 signal is converted by ECM internally. Thus, it differs from ECM terminal voltage signal.
ACCEL SEN 2 [V]	×			

Monitored item [Unit]	ECM INPUT SIGNALS	MAIN SIGNALS	Description	Remarks
TP SEN 1-B1 [V]	×	×	• The throttle position sensor signal voltage is displayed.	• TP SEN 2-B1 signal is converted by ECM internally. Thus, it differs from ECM terminal voltage signal.
TP SEN 2-B1 [V]	×			
FUEL T/TMP SE [°C] or [°F]	×		• The fuel temperature (determined by the signal voltage of the fuel tank temperature sensor) is displayed.	
INT/A TEMP SE [°C] or [°F]	×	×	• The intake air temperature (determined by the signal voltage of the intake air temperature sensor) is indicated.	
EVAP SYS PRES [V]	×		• The signal voltage of EVAP control system pressure sensor is displayed.	
FUEL LEVEL SE [V]	×		• The signal voltage of the fuel level sensor is displayed.	
START SIGNAL [ON/OFF]	×	×	• Indicates start signal status [ON/OFF] computed by the ECM according to the signals of engine speed and battery voltage.	• After starting the engine, [OFF] is displayed regardless of the starter signal.
CLSD THL POS [ON/OFF]	×	×	• Indicates idle position [ON/OFF] computed by ECM according to the accelerator pedal position sensor signal.	
AIR COND SIG [ON/OFF]	×	×	• Indicates [ON/OFF] condition of the air conditioner switch as determined by the air conditioner signal.	
P/N POSI SW [ON/OFF]	×	×	• Indicates [ON/OFF] condition from the park/neutral position (PNP) signal.	
PW/ST SIGNAL [ON/OFF]	×	×	• [ON/OFF] condition of the power steering system (determined by the signal voltage of the power steering pressure sensor signal) is indicated.	
LOAD SIGNAL [ON/OFF]	×	×	• Indicates [ON/OFF] condition from the electrical load signal. ON: Rear window defogger switch is ON and/or lighting switch is in 2nd position. OFF: Both rear window defogger switch and lighting switch are OFF.	
IGNITION SW [ON/OFF]	×		• Indicates [ON/OFF] condition from ignition switch signal.	
HEATER FAN SW [ON/OFF]	×		• Indicates [ON/OFF] condition from heater fan switch signal.	
BRAKE SW [ON/OFF]	×		• Indicates [ON/OFF] condition from the stop lamp switch signal.	
INJ PULSE-B1 [msec]		×	• Indicates the actual fuel injection pulse width compensated by ECM according to the input signals.	• When the engine is stopped, a certain computed value is indicated.
INJ PULSE-B2 [msec]				
IGN TIMING [BTDC]		×	• Indicates the ignition timing computed by ECM according to the input signals.	• When the engine is stopped, a certain value is indicated.
CAL/LD VALUE [%]			• “Calculated load value” indicates the value of the current air flow divided by peak air flow.	
MASS AIRFLOW [g·m/s]			• Indicates the mass air flow computed by ECM according to the signal voltage of the mass air flow sensor.	

Monitored item [Unit]	ECM INPUT SIGNALS	MAIN SIGNALS	Description	Remarks
PURG VOL C/V [%]			• Indicates the EVAP canister purge volume control solenoid valve control value computed by the ECM according to the input signals. • The opening becomes larger as the value increases.	
INT/V TIM (B1) [°CA]			• Indicates [°CA] of intake camshaft advanced angle.	
INT/V TIM (B2) [°CA]				
INT/V SOL (B1) [%]			• The control value of the intake valve timing control solenoid valve (determined by ECM according to the input signals) is indicated. • The advance angle becomes larger as the value increases.	
INT/V SOL (B2) [%]				
AIR COND RLY [ON/OFF]		×	• The air conditioner relay control condition (determined by ECM according to the input signals) is indicated.	
FUEL PUMP RLY [ON/OFF]		×	• Indicates the fuel pump relay control condition determined by ECM according to the input signals.	
VENT CONT/V [ON/OFF]			• The control condition of the EVAP canister vent control valve (determined by ECM according to the input signals) is indicated. ON: Closed OFF: Open	
THRTL RELAY [ON/OFF]		×	• Indicates the throttle control motor relay control condition determined by the ECM according to the input signals.	
COOLING FAN [HI/OFF]		×	• The control condition of the cooling fan (determined by ECM according to the input signals) is indicated. HI: High speed operation OFF: Stop	
HO2S2 HTR (B1) [ON/OFF]			• Indicates [ON/OFF] condition of heated oxygen sensor 2 heater determined by ECM according to the input signals.	
HO2S2 HTR (B2) [ON/OFF]				
I/P PULLY SPD [rpm]	×		• Indicates the engine speed computed from the input speed sensor signal.	
VEHICLE SPEED [km/h] or [mph]	×		• Indicates the vehicle speed computed from the output speed sensor signal.	
IDL A/V LEARN [YET/CMPLT]			• Display the condition of idle air volume learning YET: Idle Air Volume Learning has not been performed yet. CMPLT: Idle Air Volume Learning has already been performed successfully.	
TRVL AFTER MIL [km] or [mile]			• Distance traveled while MIL is activated.	

Monitored item [Unit]	ECM INPUT SIGNALS	MAIN SIGNALS	Description	Remarks
A/F S1 HTR (B1) [%]			• A/F sensor 1 heater control value computed by ECM according to the input signals. • The current flow to the heater becomes larger as the value increases.	
A/F S1 HTR (B2) [%]				
AC PRESS SEN [V]	×		• The signal voltage from the refrigerant pressure sensor is displayed.	
VHCL SPEED SE [km/h] or [mph]	×		• The vehicle speed computed from the vehicle speed signal sent from combination meter is displayed.	
SET VHCL SPD [km/h] or [mph]	×		• The preset vehicle speed is displayed.	
MAIN SW [ON/OFF]	×		• Indicates [ON/OFF] condition from MAIN switch signal.	
CANCEL SW [ON/OFF]	×		• Indicates [ON/OFF] condition from CANCEL switch signal.	
RESUME/ACC SW [ON/OFF]	×		• Indicates [ON/OFF] condition from RESUME/ACCELERATE switch signal.	
SET SW [ON/OFF]	×		• Indicates [ON/OFF] condition from SET/COAST switch signal.	
BRAKE SW1 [ON/OFF]	×		• Indicates [ON/OFF] condition from ASCD brake switch signal.	
BRAKE SW2 [ON/OFF]	×		• Indicates [ON/OFF] condition of stop lamp switch signal.	
DIST SW [ON/OFF]			• Indicates [ON/OFF] condition from DISTANCE switch signal.	
VHCL SPD CUT [NON/CUT]			• Indicates the vehicle cruise condition. NON: Vehicle speed is maintained at the ASCD set speed. CUT: Vehicle speed increased to excessively high compared with the ASCD set speed, and ASCD operation is cut off.	
LO SPEED CUT [NON/CUT]			• Indicates the vehicle cruise condition. NON: Vehicle speed is maintained at the ASCD set speed. CUT: Vehicle speed decreased to excessively low compared with the ASCD set speed, and ASCD operation is cut off.	
AT OD MONITOR [ON/OFF]			• Indicates [ON/OFF] condition of A/T O/D according to the input signal from the TCM.	
AT OD CANCEL [ON/OFF]			• Indicates [ON/OFF] condition of A/T O/D cancel signal sent from the TCM.	
CRUISE LAMP [ON/OFF]			• Indicates [ON/OFF] condition of CRUISE lamp determined by the ECM according to the input signals.	
SET LAMP [ON/OFF]			• Indicates [ON/OFF] condition of SET lamp determined by the ECM according to the input signals.	
ALT DUTY [%]			• Indicates the duty ratio of the power generation command value. The ratio is calculated by ECM based on the battery current sensor signal.	
BAT CUR SEN [mV]			• The signal voltage of battery current sensor is displayed.	

Monitored item [Unit]	ECM INPUT SIGNALS	MAIN SIGNALS	Description	Remarks
ALT DUTY SIG [ON/OFF]			• The control condition of the power generation voltage variable control (determined by ECM according to the input signals) is indicated. ON: Power generation voltage variable control is active. OFF: Power generation voltage variable control is inactive.	
A/F ADJ-B1			• Indicates the correction factor stored in ECM. The factor is calculated from the difference between the target air/fuel ratio stored in ECM and the air-fuel ratio calculated from air fuel ratio (A/F) sensor 1 signal.	
A/F ADJ-B2				
Voltage [V]			• Voltage, frequency, duty cycle or pulse width measured by the probe.	• Only # is displayed if item is unable to be measured. • Figures with #s are temporary ones. They are the same figures as an actual piece of data which was just previously measured.
Frequency [msec], [Hz] or [%]				
DUTY-HI				
DUTY-LOW				
PLS WIDTH-HI				
PLS WIDTH-LOW				

NOTE:

Any monitored item that does not match the vehicle being diagnosed is deleted from the display automatically.

ACTIVE TEST MODE

Test Item

TEST ITEM	CONDITION	JUDGEMENT	CHECK ITEM (REMEDY)
FUEL INJECTION	• Engine: Return to the original trouble condition • Change the amount of fuel injection using CONSULT-III.	If trouble symptom disappears, see CHECK ITEM.	• Harness and connectors • Fuel injector • Air fuel ratio (A/F) sensor 1
IGNITION TIMING	• Engine: Return to the original trouble condition • Timing light: Set • Retard the ignition timing using CONSULT-III.	If trouble symptom disappears, see CHECK ITEM.	• Perform Idle Air Volume Learning.
POWER BALANCE	• Engine: After warming up, idle the engine. • A/C switch: OFF • Selector lever: P or N • Cut off each injector signal one at a time using CONSULT-III.	Engine runs rough or dies.	• Harness and connectors • Compression • Fuel injector • Power transistor • Spark plug • Ignition coil
COOLING FAN*	• Ignition switch: ON • Turn the cooling fan HI and OFF using CONSULT-III.	Cooling fan moves and stops.	• Harness and connectors • Cooling fan motor • IPDM E/R
ENG COOLANT TEMP	• Engine: Return to the original trouble condition • Change the engine coolant temperature using CONSULT-III.	If trouble symptom disappears, see CHECK ITEM.	• Harness and connectors • Engine coolant temperature sensor • Fuel injector
FUEL PUMP RELAY	• Ignition switch: ON (Engine stopped) • Turn the fuel pump relay ON and OFF using CONSULT-III and listen to operating sound.	Fuel pump relay makes the operating sound.	• Harness and connectors • Fuel pump relay

TEST ITEM	CONDITION	JUDGEMENT	CHECK ITEM (REMEDY)
PURG VOL CONT/V	• Engine: After warming up, run engine at 1,500 rpm. • Change the EVAP canister purge volume control solenoid valve opening percent using CONSULT-III.	Engine speed changes according to the opening percent.	• Harness and connectors • Solenoid valve
FUEL/T TEMP SEN	• Change the fuel tank temperature using CONSULT-III.		
VENT CONTROL/V	• Ignition switch: ON (Engine stopped) • Turn solenoid valve ON and OFF with the CONSULT-III and listen to operating sound.	Solenoid valve makes an operating sound.	• Harness and connectors • Solenoid valve
V/T ASSIGN ANGLE	• Engine: Return to the original trouble condition • Change intake valve timing using CONSULT-III.	If trouble symptom disappears, see CHECK ITEM.	• Harness and connectors • Intake valve timing control solenoid valve
ALTERNATOR DUTY	• Engine: Idle • Change duty ratio using CONSULT-III.	Battery voltage changes.	• Harness and connectors • IPDM E/R • Alternator

*: Leaving cooling fan OFF with CONSULT-III while engine is running may cause the engine to overheat.

DTC & SRT CONFIRMATION MODE

SRT STATUS Mode
For details, refer to EC-462, "DTC Index".

SRT WORK SUPPORT Mode
This mode enables a technician to drive a vehicle to set the SRT while monitoring the SRT status.

DTC WORK SUPPORT Mode

Test mode	Test item	Corresponding DTC No.	Reference page
EVAPORATIVE SYSTEM	PURG FLOW P0441	P0441	EC-219
	EVP SML LEAK P0442/P1442*	P0442	EC-224
		P0455	EC-259
	EVP V/S LEAK P0456/P1456*	P0456	EC-266
	PURG VOL CN/V P1444	P0443	EC-231
A/F SEN1	A/F SEN1 (B1) P1276	P0130	EC-141
	A/F SEN1 (B1) P1278/P1279	P0133	EC-153
	A/F SEN1 (B2) P1286	P0150	EC-141
	A/F SEN1 (B2) P1288/P1289	P0153	EC-153
HO2S2	HO2S2 (B1) P0139	P0139	EC-171
	HO2S2 (B1) P1146	P0138	EC-164
	HO2S2 (B1) P1147	P0137	EC-159
	HO2S2 (B2) P0159	P0159	EC-171
	HO2S2 (B2) P1166	P0158	EC-164
	HO2S2 (B2) P1167	P0157	EC-159

*: DTC P1442 and P1456 does not apply to JA60 models but appears in DTC Work Support Mode screens.

Generic Scan Tool (GST) Function

INFOID:0000000001351349

DESCRIPTION

Generic Scan Tool (OBDII scan tool) complying with SAE J1978 has 8 different functions explained below.
ISO15765-4 is used as the protocol.
The name GST or Generic Scan Tool is used in this service manual.

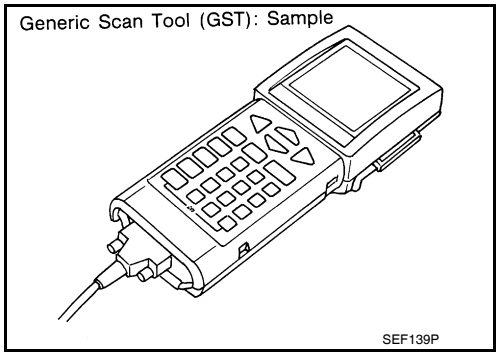

FUNCTION

Diagnostic test mode		Function
Service $01	READINESS TESTS	This diagnostic service gains access to current emission-related data values, including analog inputs and outputs, digital inputs and outputs, and system status information.
Service $02	(FREEZE DATA)	This diagnostic service gains access to emission-related data value which were stored by ECM during the freeze frame. For details, refer to EC-462, "DTC Index" .
Service $03	DTCs	This diagnostic service gains access to emission-related power train trouble codes which were stored by ECM.
Service $04	CLEAR DIAG INFO	This diagnostic service can clear all emission-related diagnostic information. This includes: • Clear number of diagnostic trouble codes (Service $01) • Clear diagnostic trouble codes (Service $03) • Clear trouble code for freeze frame data (Service $01) • Clear freeze frame data (Service $02) • Reset status of system monitoring test (Service $01) • Clear on board monitoring test results (Service $06 and $07)
Service $06	(ON BOARD TESTS)	This diagnostic service accesses the results of on board diagnostic monitoring tests of specific components/systems that are not continuously monitored.
Service $07	(ON BOARD TESTS)	This diagnostic service enables the off board test drive to obtain test results for emission-related powertrain components/systems that are continuously monitored during normal driving conditions.
Service $08	—	This diagnostic service can close EVAP system in ignition switch ON position (Engine stopped). When this diagnostic service is performed, the EVAP canister vent control valve can be closed. In the following conditions, this diagnostic service cannot function. • Low ambient temperature • Low battery voltage • Engine running • Ignition switch OFF • Low fuel temperature • Too much pressure is applied to EVAP system
Service $09	(CALIBRATION ID)	This diagnostic service enables the off-board test device to request specific vehicle information such as Vehicle Identification Number (VIN) and Calibration IDs.

INSPECTION PROCEDURE

1. Turn ignition switch OFF.
2. Connect GST to data link connector, which is located under LH dash panel near the hood opener handle.

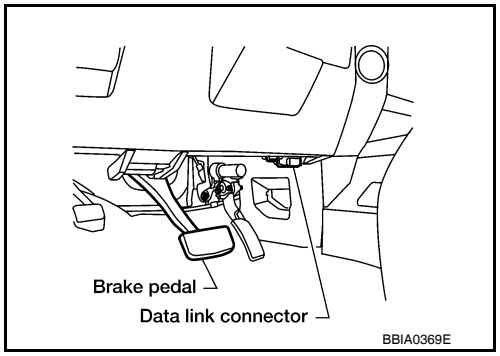

3. Turn ignition switch ON.
4. Enter the program according to instruction on the screen or in the operation manual.
   (*: Regarding GST screens in this section, sample screens are shown.)

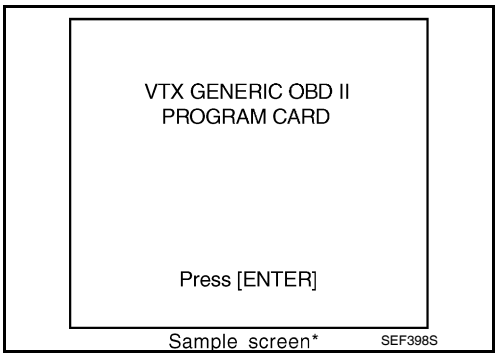

5. Perform each diagnostic service according to each service procedure.
   For further information, see the GST Operation Manual of the tool maker.

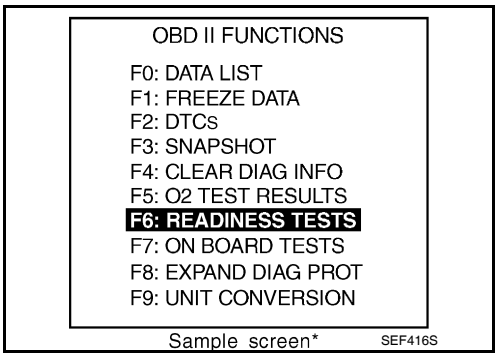

COMPONENT DIAGNOSIS

TROUBLE DIAGNOSIS - SPECIFICATION VALUE

Description

INFOID:0000000001351351

The specification (SP) value indicates the tolerance of the value that is displayed in “SPEC” of “DATA MONITOR” mode with CONSULT-III during normal operation of the Engine Control System. When the value in “SPEC” of “DATA MONITOR” mode is within the SP value, the Engine Control System is confirmed OK. When the value in “SPEC” of “DATA MONITOR” mode is NOT within the SP value, the Engine Control System may have one or more malfunctions.
The SP value is used to detect malfunctions that may affect the Engine Control System, but will not light the MIL.
The SP value will be displayed for the following three items:

- B/FUEL SCHDL (The fuel injection pulse width programmed into ECM prior to any learned on board correction)
- A/F ALPHA-B1/B2 (The mean value of air-fuel ratio feedback correction factor per cycle)
- MAS A/F SE-B1 (The signal voltage of the mass air flow sensor)

Testing Condition

INFOID:0000000001351352

- Vehicle driven distance: More than 5,000 km (3,107 miles)
- Barometric pressure: 98.3 - 104.3 kPa (1.003 - 1.064 kg/cm^2 , 14.25 - 15.12 psi)
- Atmospheric temperature: 20 - 30°C (68 - 86°F)
- Engine coolant temperature: 75 - 95°C (167 - 203°F)
- Engine speed: Idle
- Transmission: Warmed-up
  - After the engine is warmed up to normal operating temperature, drive vehicle until “ATF TEMP SE 1” (A/T fluid temperature sensor signal) indicates more than 60°C (140°F).
- Electrical load: Not applied
  - Rear window defogger switch, air conditioner switch, lighting switch are OFF. Steering wheel is straight ahead.

Inspection Procedure

INFOID:0000000001351353

NOTE:
Perform “SPEC” in “DATA MONITOR” mode in maximum scale display.

1. Perform EC-13, "Basic Inspection" .
2. Confirm that the testing conditions indicated above are met.
3. Select “B/FUEL SCHDL”, “A/F ALPHA-B1”, “A/F ALPHA-B2” and “MAS A/F SE-B1” in “SPEC” of “DATA MONITOR” mode with CONSULT-III.
4. Make sure that monitor items are within the SP value.
5. If NG, go to EC-76, "Diagnosis Procedure" .

Diagnosis Procedure

INFOID:0000000001351354

OVERALL SEQUENCE

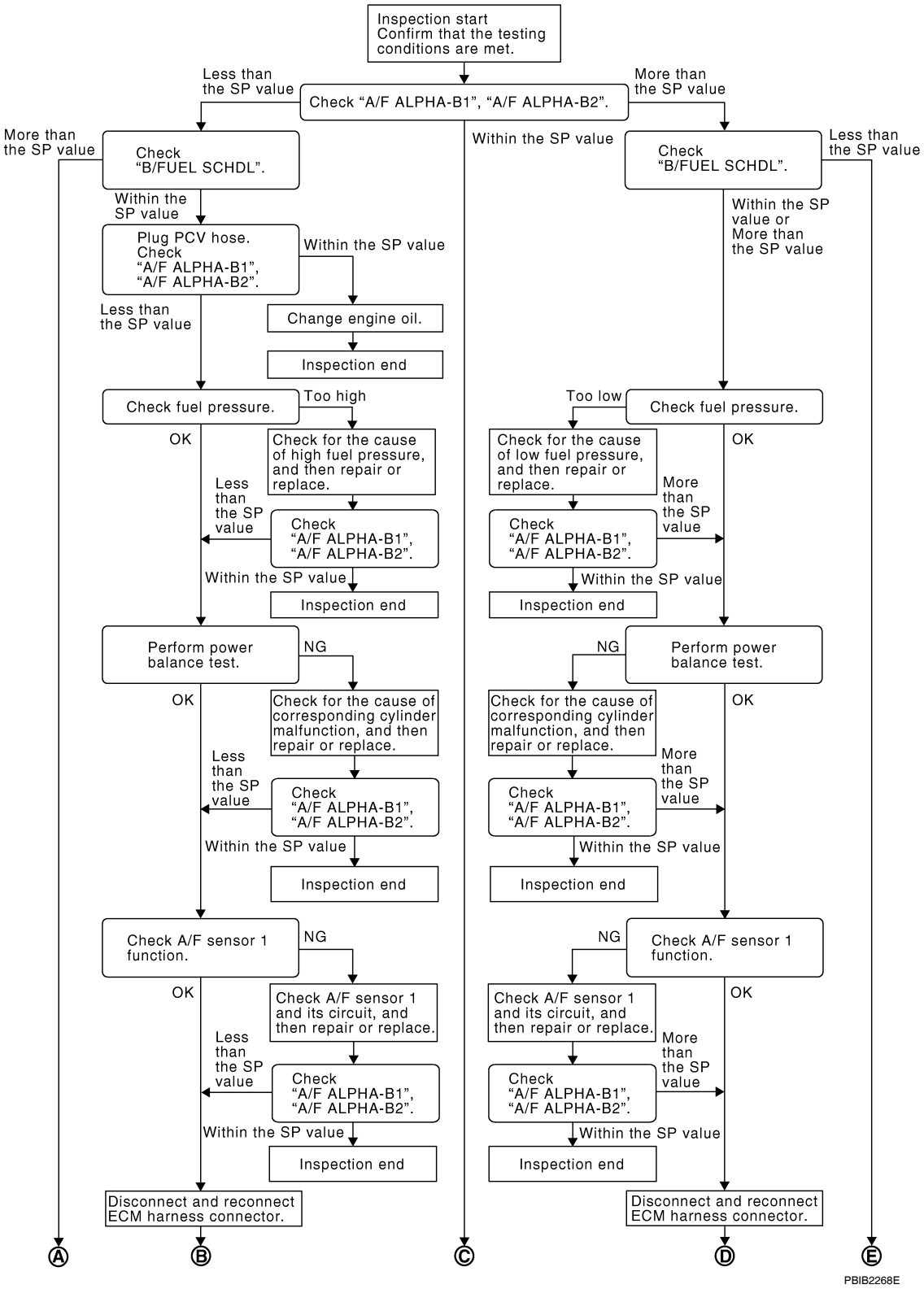

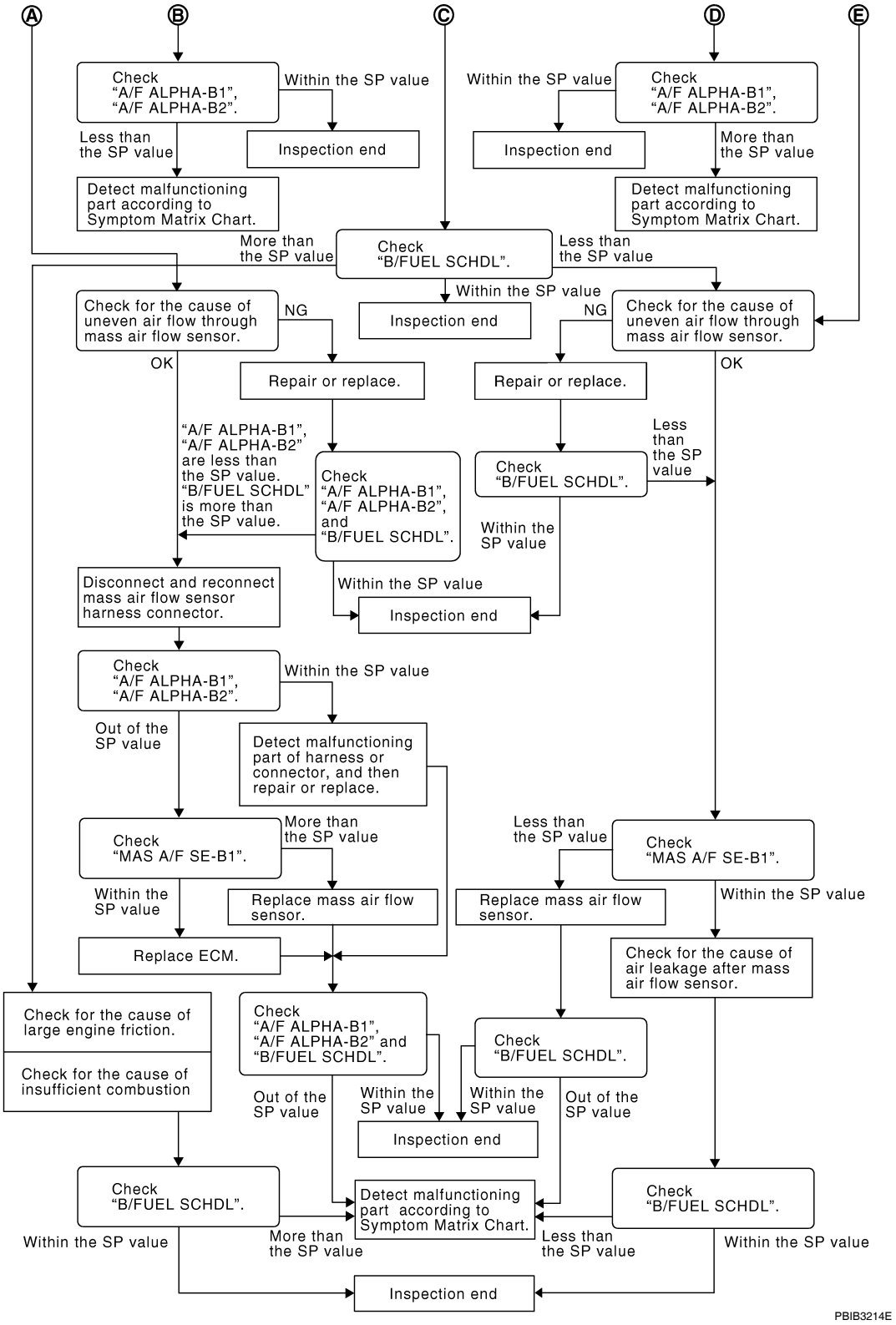

DETAILED PROCEDURE

1. CHECK "A/F ALPHA-B1", "A/F ALPHA-B2"

1. Start engine.
2. Confirm that the testing conditions are met. Refer to EC-75, "Testing Condition" .
3. Select "A/F ALPHA-B1", "A/F ALPHA-B2" in "SPEC" of "DATA MONITOR" mode, and make sure that the each indication is within the SP value.
   NOTE:

Check “A/F ALPHA-B1”, “A/F ALPHA-B2” for approximately 1 minute because they may fluctuate. It is NG if the indication is out of the SP value even a little.

OK or NG

OK >> GO TO 17.
NG (Less than the SP value)>>GO TO 2.
NG (More than the SP value)>>GO TO 3.

2. CHECK “B/FUEL SCHDL”

Select “B/FUEL SCHDL” in “SPEC” of “DATA MONITOR” mode, and make sure that the indication is within the SP value.

OK or NG

OK >> GO TO 4.
NG (More than the SP value)>>GO TO 19.

3. CHECK “B/FUEL SCHDL”

Select “B/FUEL SCHDL” in “SPEC” of “DATA MONITOR” mode, and make sure that the indication is within the SP value.

OK or NG

OK >> GO TO 6.
NG (More than the SP value)>>GO TO 6.
NG (Less than the SP value)>>GO TO 25.

4. CHECK “A/F ALPHA-B1”, “A/F ALPHA-B2”

1. Stop the engine.
2. Disconnect PCV hose, and then plug it.
3. Start engine.
4. Select “A/F ALPHA-B1”, “A/F ALPHA-B2” in “SPEC” of “DATA MONITOR” mode, and make sure that the each indication is within the SP value.

OK or NG

OK >> GO TO 5.
NG >> GO TO 6.

5. CHANGE ENGINE OIL

1. Stop the engine.
2. Change engine oil.
   NOTE:
   This symptom may occur when a large amount of gasoline is mixed with engine oil because of driving conditions (such as when engine oil temperature does not rise enough since a journey distance is too short during winter). The symptom will not be detected after changing engine oil or changing driving condition.

>> **INSPECTION END**

6. CHECK FUEL PRESSURE

Check fuel pressure. (Refer to EC-494, "Fuel Pressure Check" .)

OK or NG

OK >> GO TO 9.
NG (Fuel pressure is too high)>>Replace fuel pressure regulator, refer to EC-494, "Fuel Pressure Check" .
GO TO 8.
NG (Fuel pressure is too low)>>GO TO 7.

7. DETECT MALFUNCTIONING PART

1. Check the following.
- Clogged and bent fuel hose and fuel tube
- Clogged fuel filter
- Fuel pump and its circuit (Refer to EC-494, "Fuel Pressure Check" .)
2. If NG, repair or replace the malfunctioning part. (Refer to EC-494, "Fuel Pressure Check" .)
   If OK, replace fuel pressure regulator.

>> GO TO 8.

8. CHECK “A/F ALPHA-B1”, “A/F ALPHA-B2”

1. Start engine.
2. Select “A/F ALPHA-B1”, “A/F ALPHA-B2” in “SPEC” of “DATA MONITOR” mode, and make sure that the each indication is within the SP value.

OK or NG

OK >> **INSPECTION END**
NG >> GO TO 9.

9. PERFORM POWER BALANCE TEST

1. Perform “POWER BALANCE” in “ACTIVE TEST” mode.
2. Make sure that the each cylinder produces a momentary engine speed drop.

OK or NG

OK >> GO TO 12.
NG >> GO TO 10.

10. DETECT MALFUNCTIONING PART

1. Check the following.
- Ignition coil and its circuit (Refer to EC-411, "Diagnosis Procedure" .)
- Fuel injector and its circuit (Refer to EC-399, "Diagnosis Procedure" .)
- Intake air leakage
- Low compression pressure (Refer to EM-23, "Checking Compression Pressure".)
2. If NG, repair or replace the malfunctioning part.
   If OK, replace fuel injector. (It may be caused by leakage from fuel injector or clogging.)

>> GO TO 11.

11. CHECK “A/F ALPHA-B1”, “A/F ALPHA-B2”

1. Start engine.
2. Select “A/F ALPHA-B1”, “A/F ALPHA-B2” in “SPEC” of “DATA MONITOR” mode, and make sure that the each indication is within the SP value.

OK or NG

OK >> **INSPECTION END**
NG >> GO TO 12.

12. CHECK A/F SENSOR 1 FUNCTION

Perform all DTC Confirmation Procedure related with A/F sensor 1.
- For DTC P0130, P0150, refer to EC-141, "DTC Confirmation Procedure" .
- For DTC P0131, P0151, refer to EC-145, "DTC Confirmation Procedure" .
- For DTC P0132, P0132, refer to EC-149, "DTC Confirmation Procedure" .
- For DTC P0133, P0153, refer to EC-153, "DTC Confirmation Procedure" .
- For DTC P2A00, P2A03, refer to EC-385, "DTC Confirmation Procedure" .

OK or NG

OK >> GO TO 15.
NG >> GO TO 13.

13. CHECK A/F SENSOR 1 CIRCUIT

Perform Diagnostic Procedure according to corresponding DTC.

>> GO TO 14.

14. CHECK “A/F ALPHA-B1”, “A/F ALPHA-B2”

1. Start engine.
2. Select “A/F ALPHA-B1”, “A/F ALPHA-B2” in “SPEC” of “DATA MONITOR” mode, and make sure that the each indication is within the SP value.

OK or NG

OK >> **INSPECTION END**
NG >> GO TO 15.

15. DISCONNECT AND RECONNECT ECM HARNESS CONNECTOR

1. Stop the engine.
2. Disconnect ECM harness connector. Check pin terminal and connector for damage, and then reconnect it.

>> GO TO 16.

16. CHECK “A/F ALPHA-B1”, “A/F ALPHA-B2”

1. Start engine.
2. Select “A/F ALPHA-B1”, “A/F ALPHA-B2” in “SPEC” of “DATA MONITOR” mode, and make sure that the each indication is within the SP value.

OK or NG

OK >> **INSPECTION END**
NG >> Detect malfunctioning part according to EC-481, "Symptom Matrix Chart" .

17. CHECK “B/FUEL SCHDL”

Select “B/FUEL SCHDL” in “SPEC” of “DATA MONITOR” mode, and make sure that the indication is within the SP value.

OK or NG

OK >> **INSPECTION END**
NG (More than the SP value)>>GO TO 18.
NG (Less than the SP value)>>GO TO 25.

18. DETECT MALFUNCTIONING PART

1. Check for the cause of large engine friction. Refer to the following.
- Engine oil level is too high
- Engine oil viscosity
- Belt tension of power steering, alternator, A/C compressor, etc. is excessive
- Noise from engine
- Noise from transmission, etc.
2. Check for the cause of insufficient combustion. Refer to the following.
- Valve clearance malfunction
- Intake valve timing control function malfunction
- Camshaft sprocket installation malfunction, etc.

>> Repair or replace malfunctioning part, and then GO TO 30.

19. CHECK INTAKE SYSTEM

Check for the cause of uneven air flow through mass air flow sensor. Refer to the following.
- Crushed air ducts
- Malfunctioning seal of air cleaner element
- Uneven dirt of air cleaner element
- Improper specification of intake air system

OK or NG

OK >> GO TO 21.
NG >> Repair or replace malfunctioning part, and then GO TO 20.

20. CHECK “A/F ALPHA-B1”, “A/F ALPHA-B2”, AND “B/FUEL SCHDL”

Select “A/F ALPHA-B1”, “A/F ALPHA-B2”, and “B/FUEL SCHDL” in “SPEC” of “DATA MONITOR” mode, and make sure that the each indication is within the SP value.

OK or NG

OK >> **INSPECTION END**
NG (“B/FUEL SCHDL” is more, “A/F ALPHA-B1”, “A/F ALPHA-B2” are less than the SP value)>>GO TO 21.

21. DISCONNECT AND RECONNECT MASS AIR FLOW SENSOR HARNESS CONNECTOR

1. Stop the engine.

2. Disconnect mass air flow sensor harness connector. Check pin terminal and connector for damage and then reconnect it again.

>> GO TO 22.

22. CHECK “A/F ALPHA-B1”, “A/F ALPHA-B2”

1. Start engine.
2. Select “A/F ALPHA-B1”, “A/F ALPHA-B2” in “SPEC” of “DATA MONITOR” mode, and make sure that the each indication is within the SP value.

OK or NG

OK >> 1. Detect malfunctioning part of mass air flow sensor circuit and repair it. Refer to EC-113 .
2. GO TO 29.

NG >> GO TO 23.

23. CHECK “MAS A/F SE-B1”

Select “MAS A/F SE-B1” in “SPEC” of “DATA MONITOR” mode, and make sure that the indication is within the SP value.

OK or NG

OK >> GO TO 24.

NG (More than the SP value)>>Replace mass air flow sensor, and then GO TO 29.

24. REPLACE ECM

1. Replace ECM.
2. Perform initialization of IVIS(NATS) system and registration of all IVIS(NATS) ignition key IDs. Refer to SEC-8, "ECM RE-COMMUNICATING FUNCTION : Special Repair Requirement".
3. Perform EC-17, "VIN Registration" .
4. Perform EC-18, "Accelerator Pedal Released Position Learning" .
5. Perform EC-18, "Throttle Valve Closed Position Learning" .
6. Perform EC-18, "Idle Air Volume Learning" .

>> GO TO 29.

25. CHECK INTAKE SYSTEM

Check for the cause of uneven air flow through mass air flow sensor. Refer to the following.

- Crushed air ducts
- Malfunctioning seal of air cleaner element
- Uneven dirt of air cleaner element
- Improper specification of intake air system

OK or NG

OK >> GO TO 27.

NG >> Repair or replace malfunctioning part, and then GO TO 26.

26. CHECK “B/FUEL SCHDL”

Select “B/FUEL SCHDL” in “SPEC” of “DATA MONITOR” mode, and make sure that the indication is within the SP value.

OK or NG

OK >> **INSPECTION END**

NG (Less than the SP value)>>GO TO 27.

27. CHECK “MAS A/F SE-B1”

Select “MAS A/F SE-B1” in “SPEC” of “DATA MONITOR” mode, and make sure that the indication is within the SP value.

OK or NG

OK >> GO TO 28.

NG (Less than the SP value)>>Replace mass air flow sensor, and then GO TO 30.

28. CHECK INTAKE SYSTEM

Check for the cause of air leak after the mass air flow sensor. Refer to the following.

- Disconnection, looseness, and cracks in air duct
- Looseness of oil filler cap
- Disconnection of oil level gauge
- Open stuck, breakage, hose disconnection, or cracks of PCV valve
- Disconnection or cracks of EVAP purge hose, open stuck of EVAP canister purge volume control solenoid valve
- Malfunctioning seal of rocker cover gasket
- Disconnection, looseness, or cracks of hoses, such as vacuum hose, connecting to intake air system parts
- Malfunctioning seal of intake air system, etc.

>> GO TO 30.

29. CHECK “A/F ALPHA-B1”, “A/F ALPHA-B2”, AND “B/FUEL SCHDL”

Select “A/F ALPHA-B1”, “A/F ALPHA-B2”, and “B/FUEL SCHDL” in “SPEC” of “DATA MONITOR” mode, and make sure that the each indication is within the SP value.

OK or NG

OK >> **INSPECTION END**
NG >> Detect malfunctioning part according to EC-481, "Symptom Matrix Chart" .

30. CHECK “B/FUEL SCHDL”

Select “B/FUEL SCHDL” in “SPEC” of “DATA MONITOR” mode, and then make sure that the indication is within the SP value.

OK or NG

OK >> **INSPECTION END**
NG >> Detect malfunctioning part according to EC-481, "Symptom Matrix Chart" .

POWER SUPPLY AND GROUND CIRCUIT

Diagnosis Procedure

INFOID:0000000001351355

1. INSPECTION START

Start engine.
Is engine running?

Yes or No

Yes >> GO TO 8.
No >> GO TO 2.

2. CHECK ECM POWER SUPPLY CIRCUIT-I

1. Turn ignition switch OFF and then ON.
2. Check voltage between ECM terminal 109 and ground with CONSULT-III or tester.

Voltage: Battery voltage

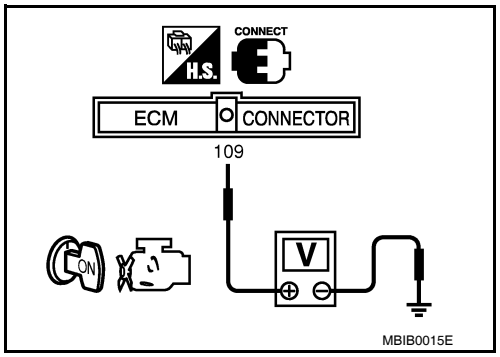

OK or NG

OK >> GO TO 4.
NG >> GO TO 3.

3. DETECT MALFUNCTIONING PART

Check the following.
- 10A fuse
- Harness for open or short between ECM and fuse

>> Repair harness or connectors.

4. CHECK GROUND CONNECTIONS

1. Turn ignition switch OFF.
2. Loosen and retighten three ground screws on the body.
Refer to EC-86, "Ground Inspection" .

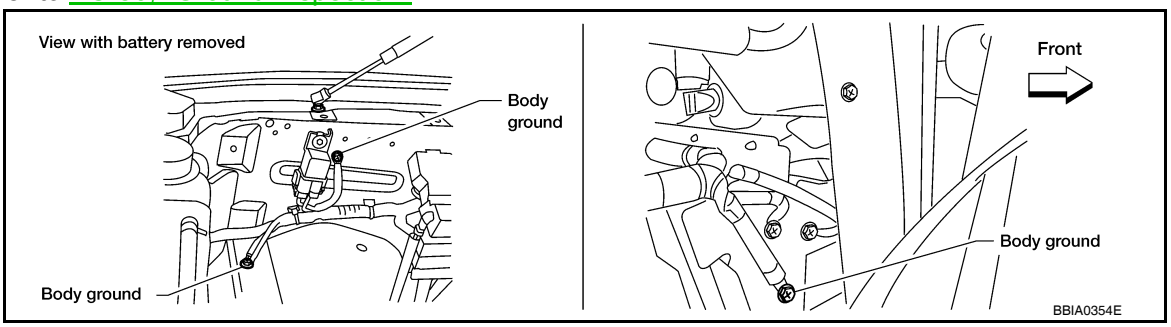

OK or NG

OK >> GO TO 5.
NG >> Repair or replace ground connections.

5. CHECK ECM GROUND CIRCUIT FOR OPEN AND SHORT-I

1. Disconnect ECM harness connector.
2. Check harness continuity between ECM terminals 1, 115, 116 and ground.
Refer to Wiring Diagram.

Continuity should exist.

3. Also check harness for short to power.

OK or NG

OK >> GO TO 7.
NG >> GO TO 6.

6. DETECT MALFUNCTIONING PART

Check the following.
- Harness connectors F32, E2
- Harness for open or short between ECM and ground

>> Repair open circuit or short to power in harness or connectors.

7. CHECK ECM POWER SUPPLY CIRCUIT-II

1. Reconnect ECM harness connector.
2. Turn ignition switch ON.
3. Check voltage between IPDM E/R terminal 4 and ground with CONSULT-III or tester.

Voltage: Battery voltage

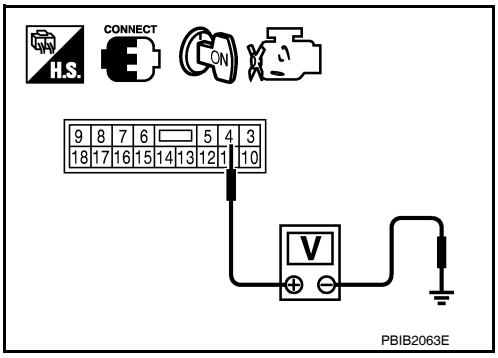

OK or NG

OK >> Go to EC-411, "Diagnosis Procedure" .
NG >> GO TO 8.

8. CHECK ECM POWER SUPPLY CIRCUIT-III

1. Turn ignition switch OFF and wait at least 10 seconds.
2. Turn ignition switch ON and then OFF.
3. Check voltage between ECM terminals 119, 120 and ground with CONSULT-III or tester.

Voltage: After turning ignition switch OFF, battery voltage will exist for a few seconds, then drop approximately 0V.

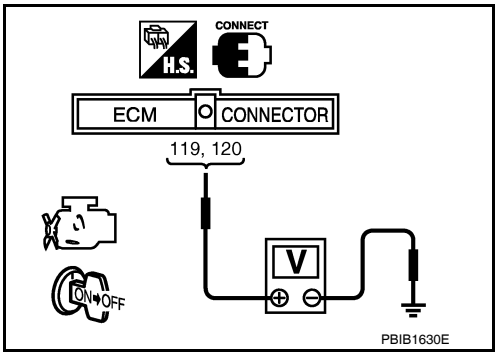

OK or NG

OK >> GO TO 13.
NG (Battery voltage does not exist.)>>GO TO 9.
NG (Battery voltage exists for more than a few seconds.)>>GO TO 11.

9. CHECK ECM POWER SUPPLY CIRCUIT-IV

1. Turn ignition switch OFF and wait at least 10 seconds.
2. Check voltage between ECM terminal 111 and ground with CONSULT-III or tester.

Voltage: Battery voltage

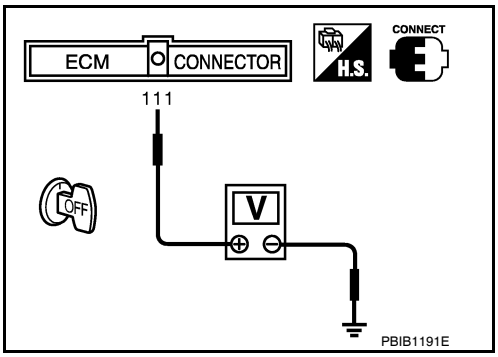

OK or NG

OK >> GO TO 10.
NG >> GO TO 11.

10. CHECK ECM POWER SUPPLY CIRCUIT-V

1. Disconnect ECM harness connector.
2. Disconnect IPDM E/R harness connector E119.
3. Check harness continuity between ECM terminals 119, 120 and IPDM E/R terminal 3.

Refer to Wiring Diagram.

Continuity should exist.

4. Also check harness for short to ground and short to power.

OK or NG

OK >> GO TO 13.
NG >> Repair open circuit or short to ground or short to power in harness or connectors.

11. CHECK ECM POWER SUPPLY CIRCUIT-VI

1. Disconnect ECM harness connector.
2. Disconnect IPDM E/R harness connector E119.
3. Check harness continuity between ECM terminal 111 and IPDM E/R terminal 7.
   Refer to Wiring Diagram.

Continuity should exist.

4. Also check harness for short to ground and short to power.

OK or NG

OK >> GO TO 12.
NG >> Repair open circuit or short to ground or short to power in harness or connectors.

12. CHECK 20A FUSE

1. Disconnect 20A fuse from IPDM E/R.
2. Check 20A fuse.

OK or NG

OK >> GO TO 16.
NG >> Replace 20A fuse.

13. CHECK GROUND CONNECTIONS

1. Turn ignition switch OFF.
2. Loosen and retighten ground three screws on the body.
   Refer to EC-86, "Ground Inspection" .

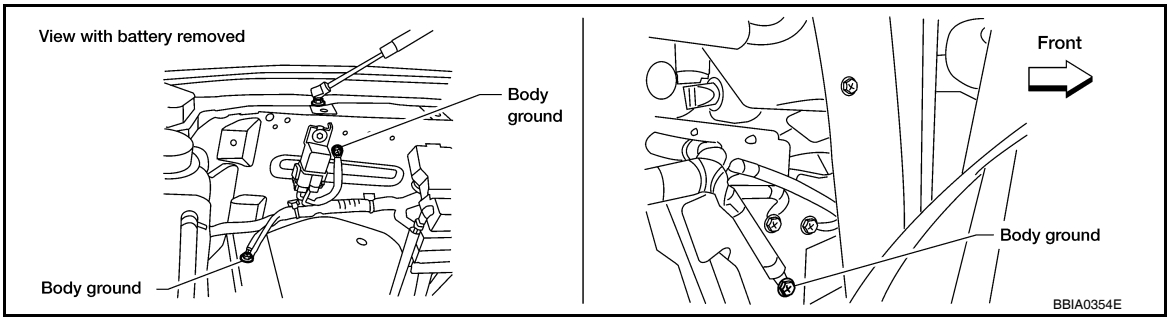

OK or NG

OK >> GO TO 14.
NG >> Repair or replace ground connections.

14. CHECK ECM GROUND CIRCUIT FOR OPEN AND SHORT-II

1. Disconnect ECM harness connector.
2. Check harness continuity between ECM terminals 1, 115, 116 and ground.
   Refer to Wiring Diagram.

Continuity should exist.

3. Also check harness for short to power.

OK or NG

OK >> GO TO 16.
NG >> GO TO 15.

15. DETECT MALFUNCTIONING PART

Check the following.
- Harness connectors F32, E2
- Harness for open or short between ECM and ground

>> Repair open circuit or short to power in harness or connectors.

16. CHECK INTERMITTENT INCIDENT

Refer to GI-35, "How to Check Terminal" and GI-38, "Intermittent Incident".

OK or NG

OK >> Replace IPDM E/R.
NG >> Repair open circuit or short to power in harness or connectors.

Ground Inspection

INFOID:0000000001351356

Ground connections are very important to the proper operation of electrical and electronic circuits. Ground connections are often exposed to moisture, dirt and other corrosive elements. The corrosion (rust) can become an unwanted resistance. This unwanted resistance can change the way a circuit works.
Electronically controlled circuits are very sensitive to proper grounding. A loose or corroded ground can drastically affect an electronically controlled circuit. A poor or corroded ground can easily affect the circuit. Even when the ground connection looks clean, there can be a thin film of rust on the surface.
When inspecting a ground connection follow these rules:
- Remove the ground bolt or screw.
- Inspect all mating surfaces for tarnish, dirt, rust, etc.
- Clean as required to assure good contact.
- Reinstall bolt or screw securely.
- Inspect for “add-on” accessories which may be interfering with the ground circuit.
- If several wires are crimped into one ground eyelet terminal, check for proper crimps. Make sure all of the wires are clean, securely fastened and providing a good ground path. If multiple wires are cased in one eyelet make sure no ground wires have excess wire insulation.

Ground Inspection

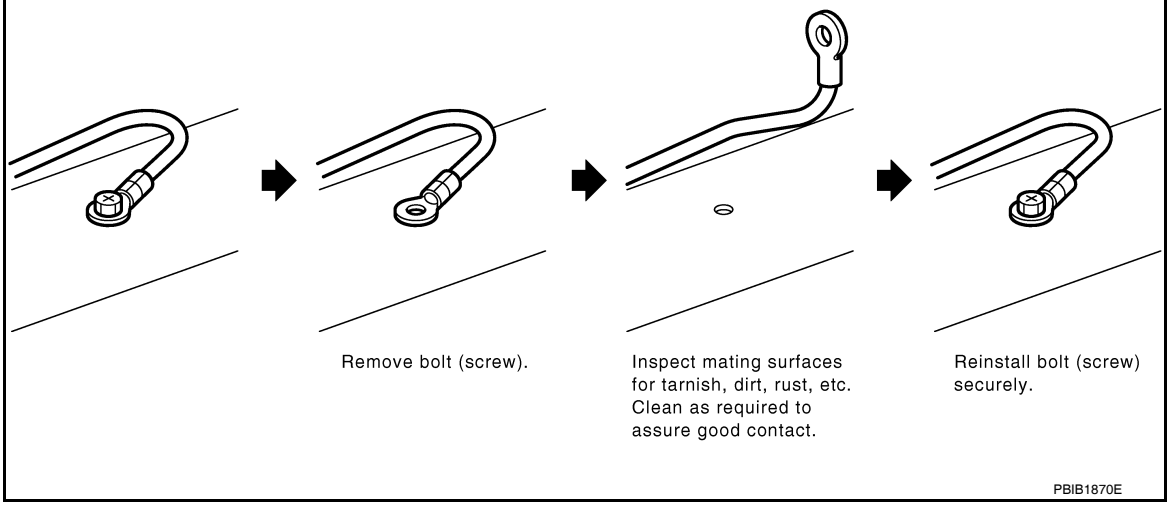

U1000, U1001 CAN COMM CIRCUIT

Description

INFOID:0000000001351359

CAN (Controller Area Network) is a serial communication line for real time application. It is an on-vehicle multiplex communication line with high data communication speed and excellent error detection ability. Many electronic control units are equipped onto a vehicle, and each control unit shares information and links with other control units during operation (not independent). In CAN communication, control units are connected with 2 communication lines (CAN H line, CAN L line) allowing a high rate of information transmission with less wiring. Each control unit transmits/receives data but selectively reads required data only.

On Board Diagnosis Logic

INFOID:0000000001351360

DTC No.	Trouble diagnosis name	DTC detecting condition	Possible cause
U1000*1 1000*1	CAN communication line	When ECM is not transmitting or receiving CAN communication signal of OBD (emission-related diagnosis) for 2 seconds or more.	• Harness or connectors (CAN communication line is open or shorted)
U1001*2*3 1001*2*3		When ECM is not transmitting or receiving CAN communication signal other than OBD (emission related diagnosis) for 2 seconds or more.	

*1: This self-diagnosis has the one trip detection logic.

*2: The MIL will not light up for this self-diagnosis.

*3: This self-diagnosis has the one or two trip detection logic (Models with ICC)

DTC Confirmation Procedure

INFOID:0000000001351361

1. Turn ignition switch ON and wait at least 3 seconds.
2. Check 1st trip DTC.
3. If 1st trip DTC is detected, go to EC-87, "Diagnosis Procedure".

Diagnosis Procedure

INFOID:0000000001351363

Go to LAN-44, "CAN Communication Signal Chart".

U1010 CONTROL UNIT (CAN)

Description

INFOID:0000000001351364

CAN (Controller Area Network) is a serial communication line for real time application. It is an on-vehicle multiplex communication line with high data communication speed and excellent error detection ability. Many electronic control units are equipped onto a vehicle, and each control unit shares information and links with other control units during operation (not independent). In CAN communication, control units are connected with 2 communication lines (CAN H line, CAN L line) allowing a high rate of information transmission with less wiring. Each control unit transmits/receives data but selectively reads required data only.

On Board Diagnosis Logic

INFOID:0000000001351365

This self-diagnosis has the one trip detection logic.

DTC No.	Trouble diagnosis name	DTC detecting condition	Possible cause
U1010 1010	CAN communication bus	When detecting error during the initial diagnosis of CAN controller of ECM.	• ECM

DTC Confirmation Procedure

INFOID:0000000001351366

WITH CONSULT-III

1. Turn ignition switch ON.
2. Check DTC.
3. If DTC is detected, go to EC-88, "Diagnosis Procedure" .

WITH GST

Follow the procedure “WITH CONSULT-III” above.

Diagnosis Procedure

INFOID:0000000001351367

1.INSPECTION START

With CONSULT-III

1. Turn ignition switch ON.
2. Select “SELF-DIAG RESULTS” mode with CONSULT-III.
3. Touch “ERASE”.
4. **Perform DTC Confirmation Procedure.**
   See EC-88, "DTC Confirmation Procedure" .
5. Is the DTC U1010 displayed again?

With GST

1. Turn ignition switch ON.
2. Select Service $04 with GST.
3. **Perform DTC Confirmation Procedure.**
   See EC-88, "DTC Confirmation Procedure" .
4. Is the DTC U1010 displayed again?

Yes or No

Yes >> GO TO 2.
No >> **INSPECTION END**

2.REPLACE ECM

1. Replace ECM.
2. Perform initialization of IVIS (NATS) system and registration of all IVIS (NATS) ignition key IDs. Refer to SEC-8, "ECM RE-COMMUNICATING FUNCTION : Special Repair Requirement".
3. Perform EC-17, "VIN Registration" .
4. Perform EC-18, "Accelerator Pedal Released Position Learning" .
5. Perform EC-18, "Throttle Valve Closed Position Learning" .
6. Perform EC-18, "Idle Air Volume Learning" .

>> **INSPECTION END**

P0011, P0021 IVT CONTROL

On Board Diagnosis Logic

INFOID:0000000001351370

DTC No.	Trouble diagnosis name	Detecting condition		Possible cause
P0011 0011 (Bank 1)	Intake valve timing control performance	A	The alignment of the intake valve timing control has been misresistered.	• Harness or connectors (Intake valve timing control solenoid valve circuit is open or shorted.) • Harness or connectors (Intake valve timing control position sensor circuit is open or shorted.) • Intake valve timing control solenoid valve • Intake valve timing control position sensor • Crankshaft position sensor (POS) • Camshaft position sensor (PHASE) • Accumulation of debris to the signal pick-up portion of the camshaft sprocket • Timing chain installation • Foreign matter caught in the oil groove for intake valve timing control
P0021 0021 (Bank 2)		B	There is a gap between angle of target and phase-control angle degree.	

FAIL-SAFE MODE

When the malfunction is detected, the ECM enters fail-safe mode.

Detected items	Engine operating condition in fail-safe mode
Intake valve timing control	The signal is not energized to the solenoid valve and the valve control does not function

DTC Confirmation Procedure

INFOID:0000000001351371

CAUTION:
Always drive at a safe speed.
NOTE:
- **If DTC P0011 or P0021 is displayed with DTC P0075, P0081, P1140 or P1145, first perform the trouble diagnosis for EC-103 or EC-299.**
- If DTC Confirmation Procedure has been previously conducted, always turn ignition switch OFF and wait at least 10 seconds before conducting the next test.

TESTING CONDITION:
Before performing the following procedure, confirm that battery voltage is between 10V and 16V at idle.

PROCEDURE FOR MALFUNCTION A

With CONSULT-III

1. Turn ignition switch ON.
2. Select “DATA MONITOR” mode with CONSULT-III.
3. Maintain the following conditions for at least 10 consecutive seconds.

ENG SPEED	More than 2,000 rpm (A constant rotation is maintained.)
COOLAN TEMP/S	More than 70°C (158°F)
Selector lever	1st or 2nd position
Driving location uphill	Driving vehicle uphill (Increased engine load will help maintain the driving conditions required for this test.)

4. Maintain the following conditions for at least 20 consecutive seconds.

ENG SPEED	Idle
COOLAN TEMP/S	More than 70°C (158°F)
Selector lever	P or N position

5. Check 1st trip DTC.
6. If 1st trip DTC is detected, go to EC-91, "Diagnosis Procedure".

With GST
Follow the procedure “With CONSULT-III” above.

PROCEDURE FOR MALFUNCTION B

With CONSULT-III
1. Turn ignition switch ON.
2. Select “DATA MONITOR” mode with CONSULT-III.
3. Maintain the following conditions for at least 10 consecutive seconds.

ENG SPEED	1,700 - 3,175 rpm (A constant rotation is maintained.)
COOLAN TEMP/S	More than 70°C (158°F)
Selector lever	1st or 2nd position
Driving location uphill	Driving vehicle uphill (Increased engine load will help maintain the driving conditions required for this test.)

4. Check 1st trip DTC.
5. If 1st trip DTC is detected, go to EC-91, "Diagnosis Procedure".

With GST
Follow the procedure “With CONSULT-III” above.

Diagnosis Procedure

INFOID:0000000001351373

1. CHECK OIL PRESSURE WARNING LAMP

1. Start engine.
2. Check oil pressure warning lamp and confirm it is not illuminated.

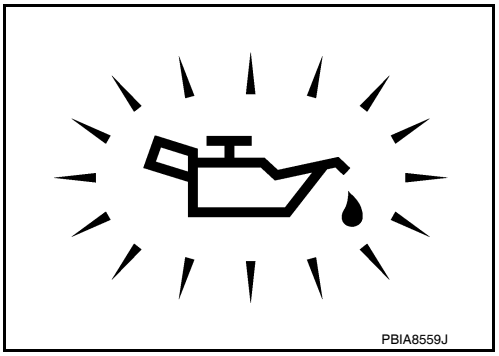

OK or NG

OK >> GO TO 2.
NG >> Go to LU-8, "Inspection".

2. CHECK GROUND CONNECTIONS

1. Turn ignition switch OFF.
2. Loosen and retighten three ground screws on the body.

Refer to EC-86, "Ground Inspection".

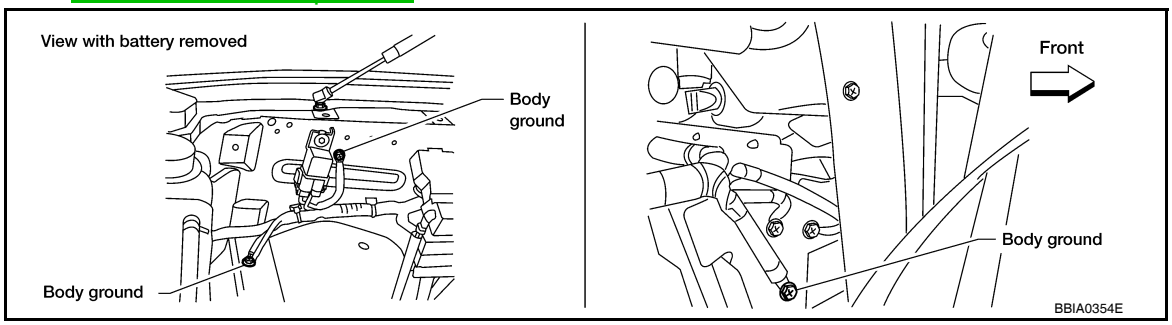

OK or NG

OK >> GO TO 3.
NG >> Repair or replace ground connections.

3. CHECK INTAKE VALVE TIMING CONTROL POSITION SENSOR POWER SUPPLY CIRCUIT

1. Disconnect intake valve timing control position sensor harness connector.

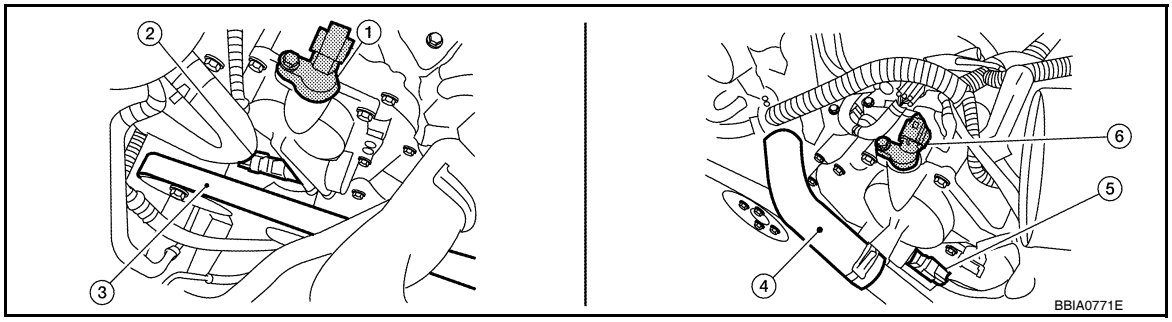

1. Intake valve timing control position sensor (bank 2)	2. Intake valve timing control solenoid valve (bank 2)	3. Drive belt
4. Radiator hose	5. Intake valve timing control solenoid valve (bank 1)	6. Intake valve timing control position sensor (bank 1)

2. Turn ignition switch ON.
3. Check voltage between intake valve timing control position sensor terminal 3 and ground with CONSULT-III or tester.

Voltage: Battery voltage

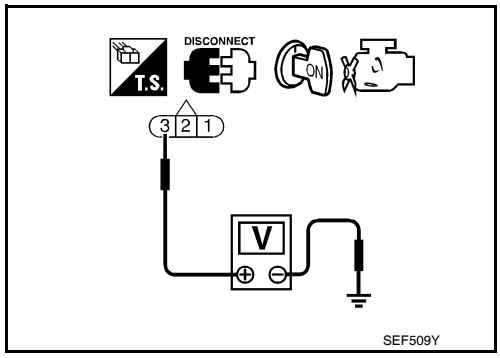

OK or NG

OK >> GO TO 5.
NG >> GO TO 4.

4. DETECT MALFUNCTIONING PART

Check the following.
- Harness connectors E2, F32
- Harness for open or short between intake valve timing control position sensor and ECM
- Harness for open or short between intake valve timing control position sensor and IPDM E/R

>> Repair open circuit or short to ground or short to power in harness or connectors.

5. CHECK INTAKE VALVE TIMING CONTROL POSITION SENSOR GROUND CIRCUIT FOR OPEN AND SHORT

1. Turn ignition switch OFF.
2. Check harness continuity between intake valve timing control position sensor terminal 1 and ground. Refer to Wiring Diagram.

Continuity should exist.

3. Also check harness for short to power.

OK or NG

OK >> GO TO 7.
NG >> GO TO 6.

6. DETECT MALFUNCTIONING PART

Check the following.
- Harness connectors E2, F32
- Harness for open or short between intake valve timing control position sensor and ground

>> Repair open circuit or short to power in harness or connectors.

7. CHECK INTAKE VALVE TIMING CONTROL POSITION SENSOR INPUT SIGNAL CIRCUIT FOR OPEN AND SHORT

1. Disconnect ECM harness connector.
2. Check harness continuity between the following;
   ECM terminal 72 and intake valve timing control position sensor (Bank 1) terminal 2 or
   ECM terminal 53 and intake valve timing control position sensor (Bank 2) terminal 2.
   Refer to Wiring Diagram.

Continuity should exist.

3. Also check harness for short to ground and short to power.

OK or NG

OK >> GO TO 8.
NG >> Repair open circuit or short to ground or short to power in harness or connectors.

8. CHECK INTAKE VALVE TIMING CONTROL POSITION SENSOR

Refer to EC-95, "Component Inspection".

OK or NG

OK >> GO TO 9.
NG >> Replace malfunctioning intake valve timing control position sensor. Refer to EC-501.

9. CHECK INTAKE VALVE TIMING CONTROL SOLENOID VALVE POWER SUPPLY CIRCUIT

1. Reconnect ECM harness connector.
2. Disconnect intake valve timing control solenoid valve harness connector.

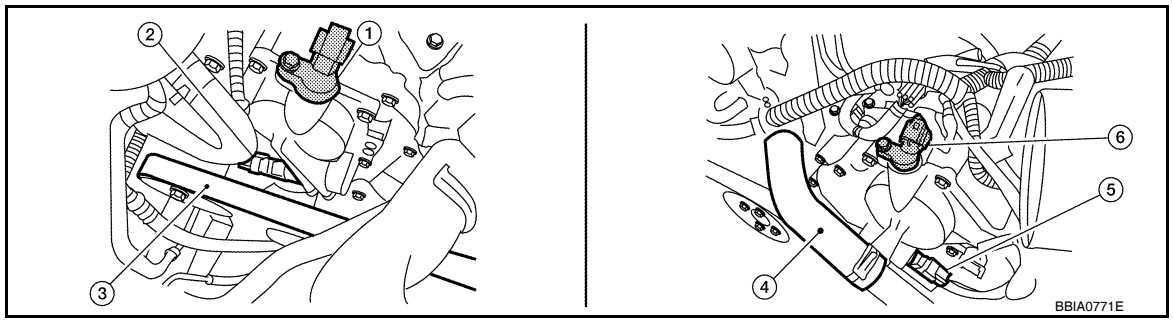

1. Intake valve timing control position sensor (bank 2)	2. Intake valve timing control solenoid valve (bank 2)	3. Drive belt
4. Radiator hose	5. Intake valve timing control solenoid valve (bank 1)	6. Intake valve timing control position sensor (bank 1)

3. Turn ignition switch ON.

4. Check voltage between intake valve timing control solenoid valve terminal 2 and ground with CONSULT-III or tester.

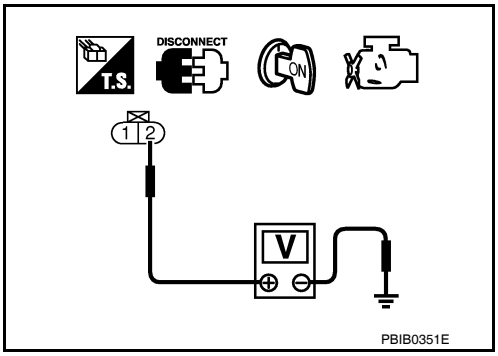

Voltage: Battery voltage

OK or NG

OK >> GO TO 11.
NG >> GO TO 10.

10. DETECT MALFUNCTIONING PART

Check the following.
- Harness connectors E2, F32
- Harness for open or short between intake valve timing control solenoid valve and IPDM E/R.

>> Repair open circuit or short to ground or short to power in harness or connectors.

11. CHECK INTAKE VALVE TIMING CONTROL SOLENOID VALVE OUTPUT SIGNAL CIRCUIT FOR OPEN AND SHORT

1. Turn ignition switch OFF.
2. Disconnect ECM harness connector.
3. Check harness continuity between the following;
   ECM terminal 10 and intake valve timing control solenoid valve (Bank 1) terminal 1 or
   ECM terminal 11 and intake valve timing control solenoid valve (Bank 2) terminal 1.
   Refer to Wiring Diagram.

Continuity should exist.

4. Also check harness for short to ground and short to power.

OK or NG

OK >> GO TO 12.
NG >> Repair open circuit or short to ground or short to power in harness or connectors.

12. CHECK INTAKE VALVE TIMING CONTROL SOLENOID VALVE

Refer to EC-95, "Component Inspection".

OK or NG

OK >> GO TO 13.
NG >> Replace malfunctioning intake valve timing control solenoid valve. Refer to EC-500.

13. CHECK CRANKSHAFT POSITION SENSOR (POS)

Refer to EC-209, "Component Inspection".

OK or NG

OK >> GO TO 14.
NG >> Replace crankshaft position sensor (POS).

14. CHECK CAMSHAFT POSITION SENSOR (PHASE)

Refer to EC-213, "Component Inspection".

OK or NG

OK >> GO TO 15.
NG >> Replace malfunctioning camshaft position sensor (PHASE). Refer to EC-501.

15. CHECK CAMSHAFT SPROCKET

Check accumulation of debris to the signal pick-up portion of the camshaft sprocket. Refer to EM-62, "Inspection after Installation".

OK or NG

OK >> GO TO 16.

NG >> Remove debris and clean the signal pick-up cutout of camshaft sprocket.

16. CHECK TIMING CHAIN INSTALLATION

Check service records for any recent repairs that may cause timing chain misaligned.
Are there any service records that may cause timing chain misaligned?

Yes or No

Yes >> Check timing chain installation. Refer to EM-45, "Removal and Installation".
No >> GO TO 17.

17. CHECK LUBRICATION CIRCUIT

Refer to EM-62, "Inspection after Installation".

OK or NG

OK >> GO TO 18.
NG >> Clean lubrication line.

18. CHECK INTERMITTENT INCIDENT

Refer to GI-35, "How to Check Terminal" and GI-38, "Intermittent Incident".

>> **INSPECTION END**

Component Inspection

INFOID:0000000001351374

INTAKE VALVE TIMING CONTROL POSITION SENSOR

1. Disconnect intake valve timing control position sensor harness connector.
2. Loosen the fixing bolt of the sensor.
3. Remove the sensor.
4. Visually check the sensor for chipping.

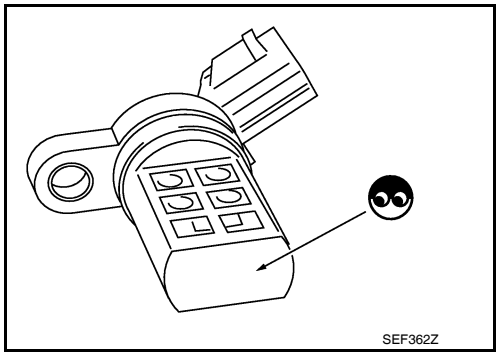

5. Check resistance as shown below.

Terminal No. (Polarity)	Resistance Ω [at 25°C (77°F)]
3 (+) - 1 (-)	Except 0 or ∞
2 (+) - 1 (-)	
3 (+) - 2 (-)	

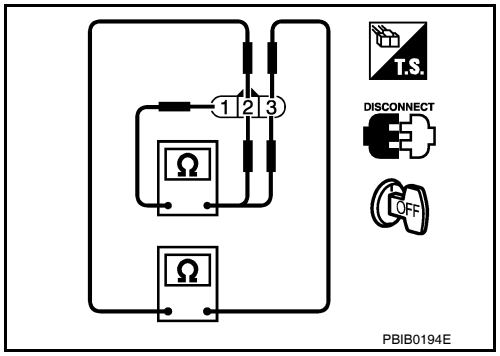

6. If NG, replace intake valve timing control position sensor. Refer to EC-501.

INTAKE VALVE TIMING CONTROL SOLENOID VALVE

1. Disconnect intake valve timing control solenoid valve harness connector.

2. Check resistance between intake valve timing control solenoid valve terminals as follows.

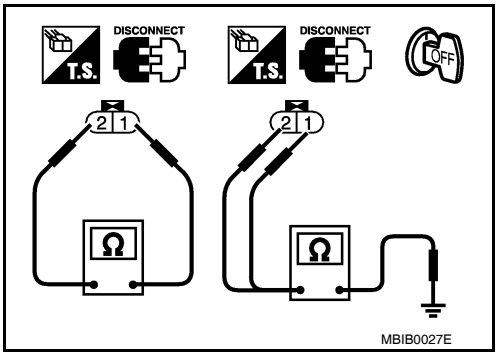

Terminals	Resistance
1 and 2	7.1 - 7.7Ω [at 20°C (68°F)]
1 or 2 and ground	∞Ω (Continuity should not exist)

If NG, replace intake valve timing control solenoid valve. Refer to EC-500.
If OK, go to next step.

3. Remove intake valve timing control solenoid valve. Refer to EC-500.

4. Provide 12V DC between intake valve timing control solenoid valve terminals and then interrupt it. Make sure that the plunger moves as shown in the figure.

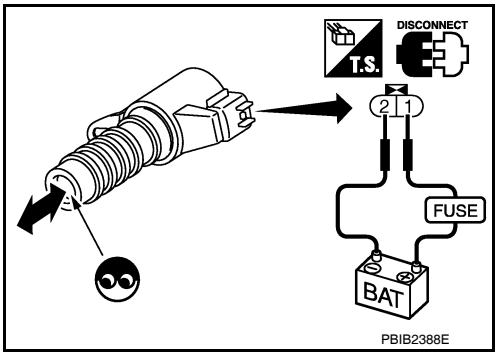

CAUTION:
Do not apply 12V DC continuously for 5 seconds or more. Doing so may result in damage to the coil in intake valve timing control solenoid valve.
If NG, replace intake valve timing control solenoid valve. Refer to EC-500.
NOTE:
Always replace O-ring when intake valve timing control solenoid valve is removed.

P0031, P0032, P0051, P0052 A/F SENSOR 1 HEATER

Description

INFOID:0000000001351384

SYSTEM DESCRIPTION

Sensor	Input Signal to ECM	ECM function	Actuator
Camshaft position sensor (PHASE) Crankshaft position sensor (POS)	Engine speed	Air fuel ratio (A/F) sensor 1 heater control	Air fuel ratio (A/F) sensor 1 heater
Mass air flow sensor	Amount of intake air		

The ECM performs ON/OFF duty control of the A/F sensor 1 heater corresponding to the engine operating condition to keep the temperature of A/F sensor 1 element at the specified range.

On Board Diagnosis Logic

INFOID:0000000001351378

DTC No.	Trouble diagnosis name	DTC detecting condition	Possible cause
P0031 0031 (Bank 1) P0051 0051 (Bank 2)	Air fuel ratio (A/F) sensor 1 heater control circuit low	The current amperage in the air fuel ratio (A/F) sensor 1 heater circuit is out of the normal range. (An excessively low voltage signal is sent to ECM through the air fuel ratio (A/F) sensor 1 heater.)	• Harness or connectors (The A/F sensor 1 heater circuit is open or shorted.) • A/F sensor 1 heater
P0032 0032 (Bank 1) P0052 0052 (Bank 2)	Air fuel ratio (A/F) sensor 1 heater control circuit high	The current amperage in the air fuel ratio (A/F) sensor 1 heater circuit is out of the normal range. (An excessively high voltage signal is sent to ECM through the air fuel ratio (A/F) sensor 1 heater.)	• Harness or connectors (The A/F sensor 1 heater circuit is shorted.) • A/F sensor 1 heater

DTC Confirmation Procedure

INFOID:0000000001351379

NOTE:
If DTC Confirmation Procedure has been previously conducted, always turn ignition switch OFF and wait at least 10 seconds before conducting the next test.
TESTING CONDITION:
Before performing the following procedure, confirm that battery voltage is between 10.5V and 16V at idle.

WITH CONSULT-III

1. Start engine and let it idle for at least 10 seconds.
2. Check 1st trip DTC.
3. If 1st trip DTC is detected, go to EC-97, "Diagnosis Procedure".

WITH GST

Follow the procedure “WITH CONSULT-III” above.

Diagnosis Procedure

INFOID:0000000001351381

1. CHECK GROUND CONNECTIONS

1. Turn ignition switch OFF.
2. Loosen and retighten three ground screws on the body.

Refer to EC-86, "Ground Inspection".

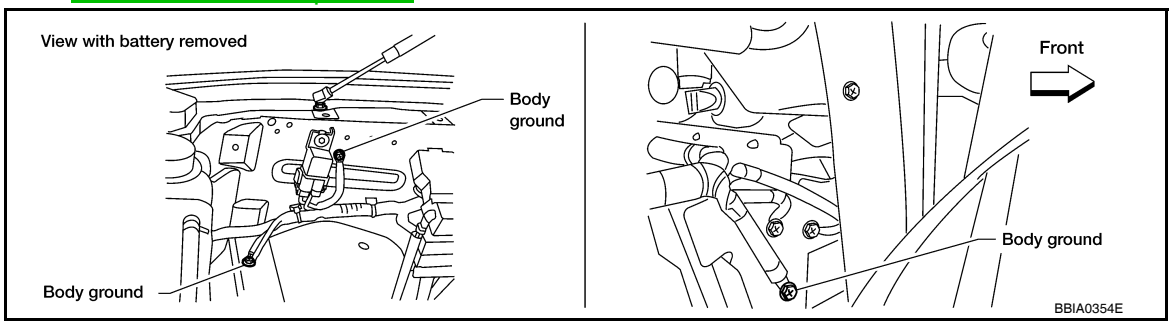

OK or NG

OK >> GO TO 2.
NG >> Repair or replace ground connections.

2. CHECK AIR FUEL RATIO (A/F) SENSOR 1 POWER SUPPLY CIRCUIT

1. Disconnect air fuel ratio (A/F) sensor 1 harness connector.

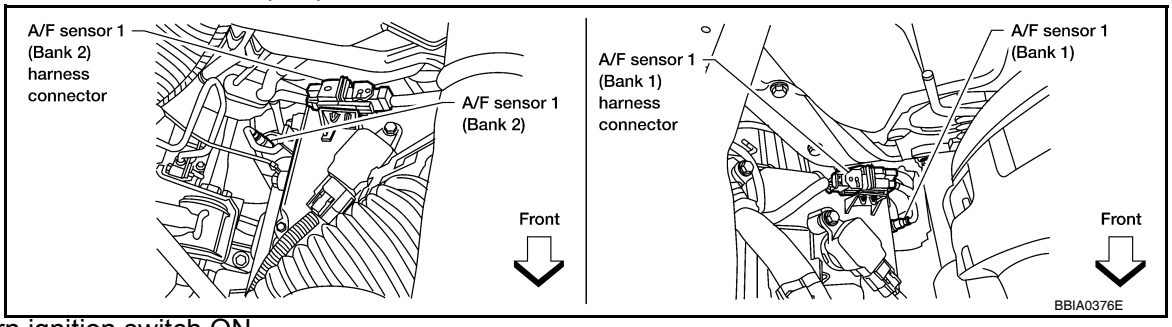

2. Turn ignition switch ON.
3. Check voltage between A/F sensor 1 terminal 4 and ground with CONSULT-III or tester.

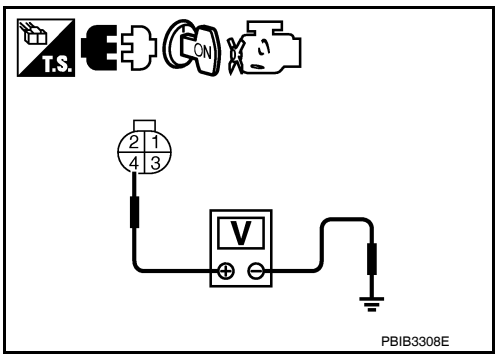

Voltage: Battery voltage

OK or NG

OK >> GO TO 4.
NG >> GO TO 3.

3. DETECT MALFUNCTIONING PART

Check the following.
- Harness connectors E5, F14
- IPDM E/R harness connector E119
- 15A fuse
- Harness for open or short between A/F sensor 1 and fuse

>> Repair or replace harness or connectors.

4. CHECK A/F SENSOR 1 HEATER OUTPUT SIGNAL CIRCUIT

1. Turn ignition switch OFF.
2. Disconnect ECM harness connector.
3. Check harness continuity between ECM terminal 2 (bank 1) or 24, 43 (bank 2) and A/F sensor 1 terminal 3.
   Refer to Wiring Diagram.

Continuity should exist.

4. Also check harness for short to ground and short to power.

OK or NG

OK >> GO TO 5.
NG >> Repair open circuit or short to ground or short to power in harness or connectors.

5. CHECK A/F SENSOR 1 HEATER

Refer to EC-99, "Component Inspection".

OK or NG

OK >> GO TO 6.
NG >> Replace malfunctioning air fuel ratio (A/F) sensor 1.

6. CHECK INTERMITTENT INCIDENT

Refer to GI-35, "How to Check Terminal" and GI-38, "Intermittent Incident".

>> **INSPECTION END**

Component Inspection

INFOID:0000000001351382

AIR FUEL RATIO (A/F) SENSOR 1 HEATER

1. Check resistance between A/F sensor 1 terminals as follows.

Terminal No.	Resistance
3 and 4	1.98 - 2.66 Ω [at 25°C (77°F)]
3 and 1, 2	∞ Ω (Continuity should not exist)
4 and 1, 2	

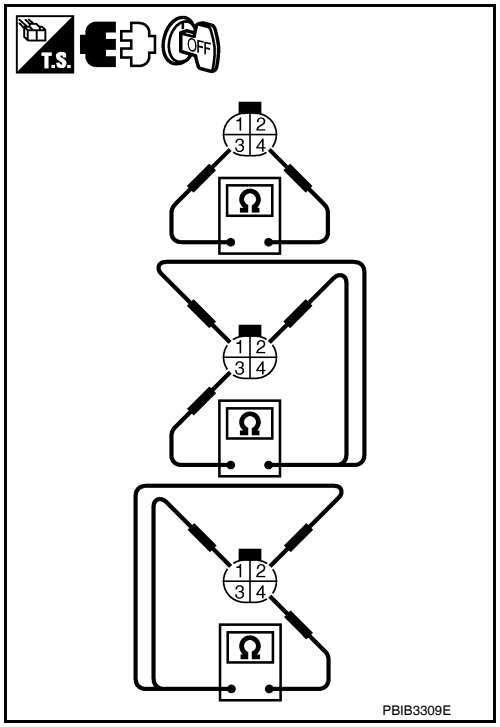

2. If NG, replace air fuel ratio (A/F) sensor 1.

CAUTION:

- **Discard any A/F sensor which has been dropped from a height of more than 0.5 m (19.7 in) onto a hard surface such as a concrete floor; use a new one.**
- **Before installing new A/F sensor, clean exhaust system threads using Heated Oxygen Sensor Thread Cleaner tool J-43897-18 or J-43897-12 and approved anti-seize lubricant.**

P0037, P0038, P0057, P0058 HO2S2 HEATER

Description

INFOID:0000000001351385

SYSTEM DESCRIPTION

Sensor	Input signal to ECM	ECM function	Actuator
Camshaft position sensor (PHASE) Crankshaft position sensor (POS)	Engine speed	Heated oxygen sensor 2 heater control	Heated oxygen sensor 2 heater
Engine coolant temperature sensor	Engine coolant temperature		
Mass air flow sensor	Amount of intake air		

The ECM performs ON/OFF control of the heated oxygen sensor 2 heater corresponding to the engine speed, amount of intake air and engine coolant temperature.

OPERATION

Engine speed rpm	Heated oxygen sensor 2 heater
Above 3,600	OFF
Below 3,600 rpm after the following conditions are met. • Engine: After warming up • Keeping the engine speed between 3,500 and 4,000 rpm for 1 minute and at idle for 1 minute under no load	ON

On Board Diagnosis Logic

INFOID:0000000001351387

DTC No.	Trouble diagnosis name	DTC detecting condition	Possible cause
P0037 0037 (Bank 1)	Heated oxygen sensor 2 heater control circuit low	The current amperage in the heated oxygen sensor 2 heater circuit is out of the normal range. (An excessively low voltage signal is sent to ECM through the heated oxygen sensor 2 heater.)	• Harness or connectors (The heated oxygen sensor 2 heater circuit is open or shorted.) • Heated oxygen sensor 2 heater
P0057 0057 (Bank 2)			
P0038 0038 (Bank 1)	Heated oxygen sensor 2 heater control circuit high	The current amperage in the heated oxygen sensor 2 heater circuit is out of the normal range. (An excessively high voltage signal is sent to ECM through the heated oxygen sensor 2 heater.)	• Harness or connectors (The heated oxygen sensor 2 heater circuit is shorted.) • Heated oxygen sensor 2 heater
P0058 0058 (Bank 2)			

DTC Confirmation Procedure

INFOID:0000000001351388

NOTE:
If DTC Confirmation Procedure has been previously conducted, always turn ignition switch OFF and wait at least 10 seconds before conducting the next test.
TESTING CONDITION:
Before performing the following procedure, confirm that battery voltage is between 10.5V and 16V at idle.

WITH CONSULT-III

1. Turn ignition switch ON and select “DATA MONITOR” mode with CONSULT-III.
2. Start engine and warm it up to the normal operating temperature.
3. Turn ignition switch OFF and wait at least 10 seconds.
4. Start the engine and keep the engine speed between 3,500 rpm and 4,000 rpm for at least 1 minute under no load.
5. Let engine idle for 1 minute.
6. Check 1st trip DTC.

7. If 1st trip DTC is detected, go to EC-101, "Diagnosis Procedure".

WITH GST
Follow the procedure “WITH CONSULT-III” above.

Diagnosis Procedure

INFOID:0000000001351390

1. CHECK GROUND CONNECTIONS

1. Turn ignition switch OFF.
2. Loosen and retighten three ground screws on the body.
   Refer to EC-86, "Ground Inspection".

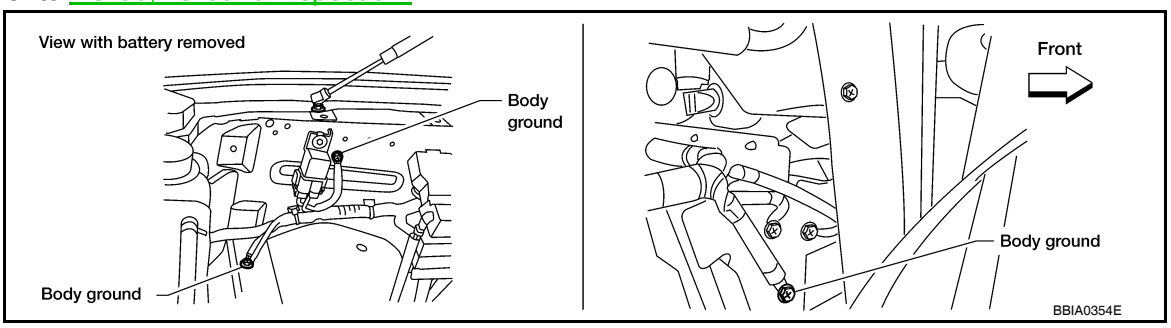

OK or NG
OK >> GO TO 2.
NG >> Repair or replace ground connections.

2. CHECK HO2S2 POWER SUPPLY CIRCUIT

1. Disconnect heated oxygen sensor 2 harness connector.

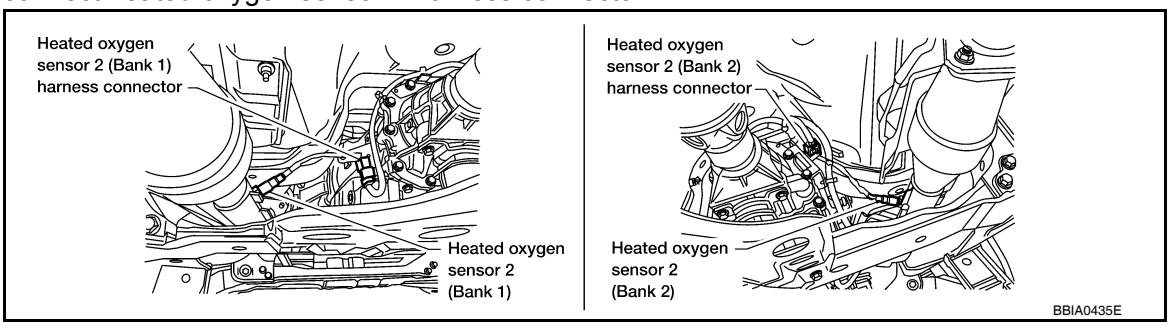

2. Turn ignition switch ON.
3. Check voltage between HO2S2 terminal 3 and ground with CONSULT-III or tester.

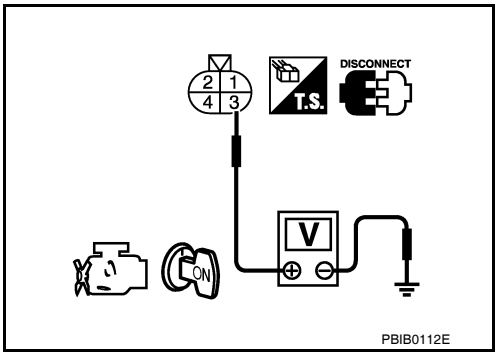

Voltage: Battery voltage

OK or NG
OK >> GO TO 4.
NG >> GO TO 3.

3. DETECT MALFUNCTIONING PART

Check the following.
- Harness connectors E5, F14
- IPDM E/R harness connector E119
- 15A fuse
- Harness for open or short between heated oxygen sensor 2 and fuse

>> Repair harness or connectors.

4. CHECK HO2S2 HEATER OUTPUT SIGNAL CIRCUIT FOR OPEN AND SHORT

1. Turn ignition switch OFF.
2. Disconnect ECM harness connector.
3. Check harness continuity between ECM terminal and HO2S2 terminal as follows.
   Refer to Wiring Diagram.

DTC	Terminals		Bank
	ECM	Sensor	
P0037, P0038	6	2	1
P0057, P0058	25	2	2

Continuity should exist.

4. Also check harness for short to ground and short to power.

OK or NG

OK >> GO TO 5.
NG >> Repair open circuit or short to ground or short to power in harness or connectors.

5. CHECK HEATED OXYGEN SENSOR 2 HEATER

Refer to EC-102, "Component Inspection".

OK or NG

OK >> GO TO 6.
NG >> Replace malfunctioning heated oxygen sensor 2.

6. CHECK INTERMITTENT INCIDENT

Refer to GI-35, "How to Check Terminal" and GI-38, "Intermittent Incident".

>> **INSPECTION END**

Component Inspection

INFOID:0000000001351391

HEATED OXYGEN SENSOR 2 HEATER

1. Check resistance between HO2S2 terminals as follows.

Terminal No.	Resistance
2 and 3	8 - 10 Ω at 25°C (77°F)
1 and 2, 3, 4	∞ Ω (Continuity should not exist)
4 and 1, 2, 3	

2. If NG, replace heated oxygen sensor 2.

CAUTION:

- **Discard any heated oxygen sensor which has been dropped from a height of more than 0.5 m (19.7 in) onto a hard surface such as a concrete floor; use a new one.**
- **Before installing new oxygen sensor, clean exhaust system threads using Oxygen Sensor Thread Cleaner tool J-43897-18 or J-43897-12 and approved anti-seize lubricant.**

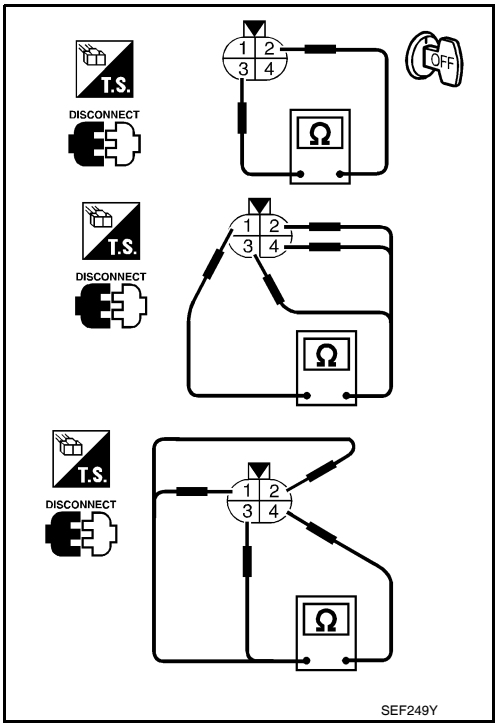

P0075, P0081 IVT CONTROL SOLENOID VALVE

Component Description

INFOID:0000000001351393

Intake valve timing control solenoid valve is activated by ON/OFF pulse duty (ratio) signals from the ECM.
The intake valve timing control solenoid valve changes the oil amount and direction of flow through intake valve timing control unit or stops oil flow.
The longer pulse width advances valve angle.
The shorter pulse width retards valve angle.
When ON and OFF pulse widths become equal, the solenoid valve stops oil pressure flow to fix the intake valve angle at the control position.

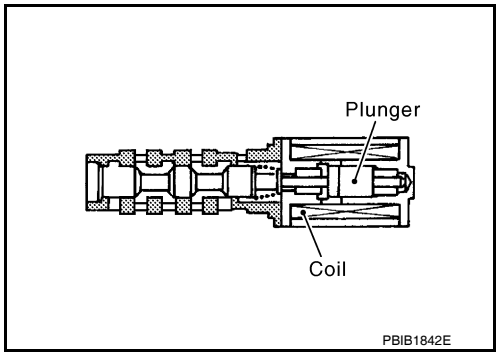

On Board Diagnosis Logic

INFOID:0000000001351395

DTC No.	Trouble diagnosis name	DTC detecting condition	Possible cause
P0075 0075 (Bank 1)	Intake valve timing control solenoid valve circuit	An improper voltage is sent to the ECM through intake valve timing control solenoid valve.	• Harness or connectors (Intake valve timing control solenoid valve circuit is open or shorted.) • Intake valve timing control solenoid valve
P0081 0081 (Bank 2)			

DTC Confirmation Procedure

INFOID:0000000001351396

NOTE:
If DTC Confirmation Procedure has been previously conducted, always turn ignition switch OFF and wait at least 10 seconds before conducting the next test.

WITH CONSULT-III

1. Start engine and let it idle for 5 seconds.
2. Check 1st trip DTC.
3. If 1st trip DTC is detected, go to EC-103, "Diagnosis Procedure".

WITH GST

Following the procedure “WITH CONSULT-III” above.

Diagnosis Procedure

INFOID:0000000001351398

1. CHECK INTAKE VALVE TIMING CONTROL SOLENOID VALVE POWER SUPPLY CIRCUIT

1. Turn ignition switch OFF.
2. Disconnect intake valve timing control solenoid valve harness connector.

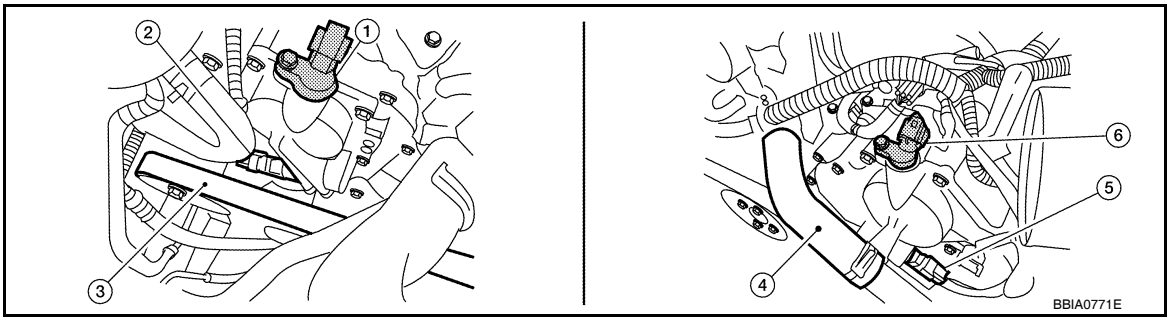

1. Intake valve timing control position sensor (bank 2)
2. Intake valve timing control solenoid valve (bank 2)
3. Drive belt
4. Radiator hose
5. Intake valve timing control solenoid valve (bank 1)
6. Intake valve timing control position sensor (bank 1)

3. Turn ignition switch ON.
4. Check voltage between intake valve timing control solenoid valve terminal 2 and ground with CONSULT-III or tester.

Voltage: Battery voltage

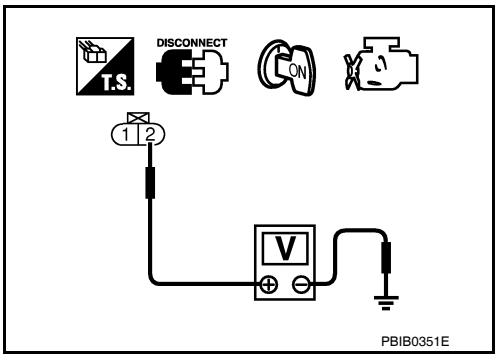

OK or NG

OK >> GO TO 3.
NG >> GO TO 2.

2. DETECT MALFUNCTIONING PART

Check the following.
- Harness connectors E2, F32
- IPDM E/R harness connector E119
- Harness for open or short between intake valve timing control solenoid valve and IPDM E/R

>> Repair open circuit or short to ground or short to power in harness or connectors.

3. CHECK INTAKE VALVE TIMING CONTROL SOLENOID VALVE OUTPUT SIGNAL CIRCUIT FOR OPEN AND SHORT

1. Turn ignition switch OFF.
2. Disconnect ECM harness connector.
3. Check harness continuity between the following;
   ECM terminal 10 and intake valve timing control solenoid valve (Bank 1) terminal 1 or
   ECM terminal 11 and intake valve timing control solenoid valve (Bank 2) terminal 1.
   Refer to Wiring Diagram.

Continuity should exist.

4. Also check harness for short to ground and short to power.

OK or NG

OK >> GO TO 4.
NG >> Repair open circuit or short to ground or short to power in harness or connectors.

4. CHECK INTAKE VALVE TIMING CONTROL SOLENOID VALVE

Refer to EC-104, "Component Inspection".

OK or NG

OK >> GO TO 5.
NG >> Replace malfunctioning intake valve timing control solenoid valve. Refer to EC-500.

5. CHECK INTERMITTENT INCIDENT

Refer to GI-35, "How to Check Terminal" and GI-38, "Intermittent Incident".

>> **INSPECTION END**

Component Inspection

INFOID:0000000001351399

INTAKE VALVE TIMING CONTROL SOLENOID VALVE

1. Disconnect intake valve timing control solenoid valve harness connector.

2. Check resistance between intake valve timing control solenoid valve terminals as follows.

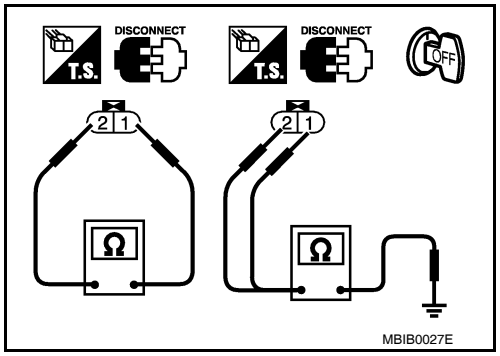

Terminals	Resistance
1 and 2	7.1 - 7.7Ω [at 20°C (68°F)]
1 or 2 and ground	∞Ω (Continuity should not exist)

If NG, replace intake valve timing control solenoid valve. Refer to EC-500.
If OK, go to next step.

3. Remove intake valve timing control solenoid valve. Refer to EC-500.

4. Provide 12V DC between intake valve timing control solenoid valve terminals and then interrupt it. Make sure that the plunger moves as shown in the figure.

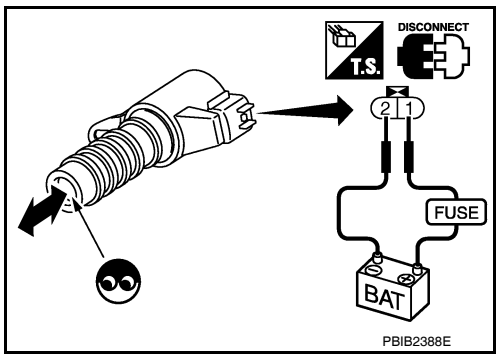

CAUTION:
Do not apply 12V DC continuously for 5 seconds or more. Doing so may result in damage to the coil in intake valve timing control solenoid valve.
If NG, replace intake valve timing control solenoid valve. Refer to EC-500.
NOTE:
Always replace O-ring when intake valve timing control solenoid valve is removed.

P0101 MAF SENSOR

Component Description

INFOID:0000000001351401

The mass air flow sensor is placed in the stream of intake air. It measures the intake flow rate by measuring a part of the entire intake flow. The mass air flow sensor controls the temperature of the hot wire to a certain amount. The heat generated by the hot wire is reduced as the intake air flows around it. The more air, the greater the heat loss.
Therefore, the electric current supplied to the hot wire is changed to maintain the temperature of the hot wire as air flow increases. The ECM detects the air flow by means of this current change.

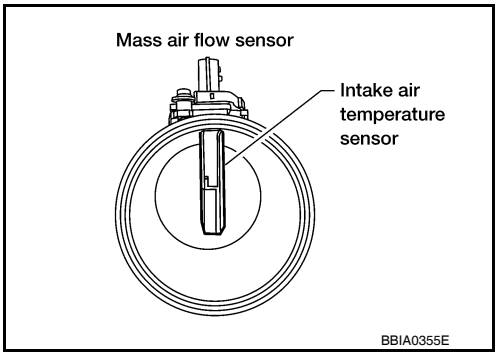

On Board Diagnosis Logic

INFOID:0000000001351403

DTC No.	Trouble diagnosis name	DTC detecting condition		Possible cause
P0101 0101	Mass air flow sensor circuit range/performance	A)	A high voltage from the sensor is sent to ECM under light load driving condition.	• Harness or connectors (The sensor circuit is open or shorted.) • Mass air flow sensor • EVAP control system pressure sensor • Intake air temperature sensor
		B)	A low voltage from the sensor is sent to ECM under heavy load driving condition.	• Harness or connectors (The sensor circuit is open or shorted.) • Intake air leaks • Mass air flow sensor • EVAP control system pressure sensor • Intake air temperature sensor

DTC Confirmation Procedure

INFOID:0000000001351404

Perform PROCEDURE FOR MALFUNCTION A first.
If the DTC cannot be confirmed, perform PROCEDURE FOR MALFUNCTION B.
NOTE:
If DTC Confirmation Procedure has been previously conducted, always turn ignition switch OFF and wait at least 10 seconds before conducting the next test.

PROCEDURE FOR MALFUNCTION A

NOTE:
If engine will not start or stops soon, wait at least 10 seconds with engine stopped (Ignition switch ON) instead of running engine at idle speed.

With CONSULT-III
1. Start engine and warm it up to normal operating temperature.
2. Run engine for at least 10 seconds at idle speed.
3. Check 1st trip DTC.
4. If 1st trip DTC is detected, go to EC-109, "Diagnosis Procedure".

With GST
Follow the procedure “With CONSULT-III” above.

PROCEDURE FOR MALFUNCTION B

NOTE:
Check vehicle specifications and VIN, then select the procedure to be performed. (Refer to the table below.)

Vehicle specification	Vehicle serial number	Procedure
2WD with ASCD	Up to 912536	B-a
	From 912537	B-b
2WD with ICC	Up to 914347	B-a
	From 914348	B-b
4WD with ASCD	Up to 913067	B-a
	From 913068	B-b
4WD with ICC	Up to 912422	B-a
	From 912423	B-b

Procedure for Malfunction B-a

WITH CONSULT-III

1. Start engine and warm it up to normal operating temperature.
   If engine cannot be started, go to EC-109, "Diagnosis Procedure".
2. Select “DATA MONITOR” mode with CONSULT-III.
3. Check the voltage of “MAS A/F SE-B1” with “DATA MONITOR”.
4. Increases engine speed to about 4,000 rpm.
5. Monitor the linear voltage rise in response to engine speed increases.
   If NG, go to EC-109, "Diagnosis Procedure".
   If OK, go to following step.

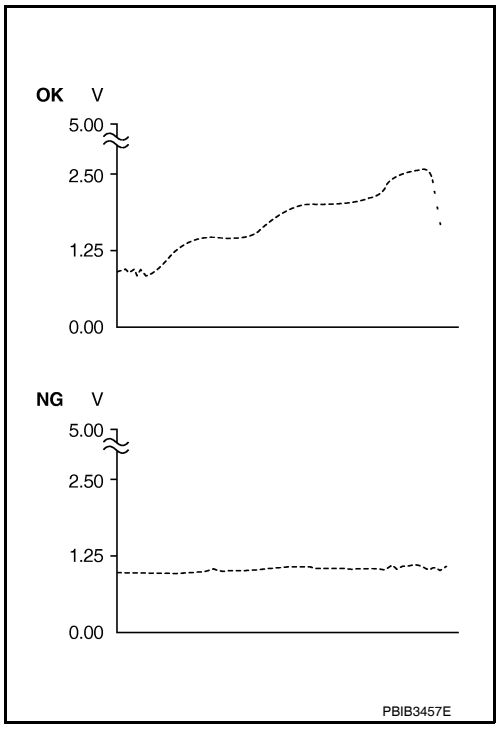

6. Maintain the following conditions for at least 10 consecutive seconds.

ENG SPEED	More than 2,000 rpm
TP SEN 1-B1	More than 3 V
TP SEN 2-B1	More than 3 V
Selector lever	Suitable position
Driving location	Driving vehicle uphill (Increased engine load) will help maintain the driving conditions required for this test.

CAUTION:
Always drive vehicle at a safe speed.

7. Check 1st trip DTC.
8. If 1st trip DTC is detected, go to EC-109, "Diagnosis Procedure".

Procedure for Malfunction B-b

WITH CONSULT-III

1. Start engine and warm it up to normal operating temperature.

If engine cannot be started, go to EC-109, "Diagnosis Procedure".

2. Select “DATA MONITOR” mode with CONSULT-III.
3. Check the voltage of “MAS A/F SE-B1” with “DATA MONITOR”.
4. Increases engine speed to about 4,000 rpm.
5. Monitor the linear voltage rise in response to engine speed increases.
   If NG, go to EC-109, "Diagnosis Procedure".
   If OK, go to following step.

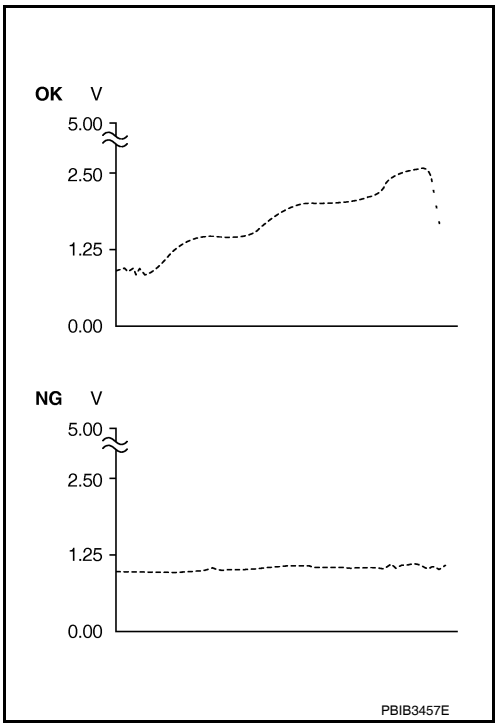

6. Maintain the following conditions for at least 10 consecutive seconds.

ENG SPEED	More than 2,000 rpm
TP SEN 1-B1	More than 1.5 V
TP SEN 2-B1	More than 1.5 V
Selector lever	Suitable position
Driving location	Driving vehicle uphill (Increased engine load) will help maintain the driving conditions required for this test.

CAUTION:
Always drive vehicle at a safe speed.

7. Check 1st trip DTC.
8. If 1st trip DTC is detected, go to EC-109, "Diagnosis Procedure".

Overall Function Check

INFOID:0000000001351405

PROCEDURE FOR MALFUNCTION B

Use this procedure to check the overall function of the mass air flow sensor circuit. During this check, a 1st trip DTC might not be confirmed.

With GST

1. Start engine and warm it up to normal operating temperature.
2. Select Service $01 with GST.
3. Check the mass air flow sensor signal with Service $01.
4. Check for linear mass air flow sensor signal value rise in response to increases to about 4,000 rpm in engine speed.
5. If NG, go to EC-109, "Diagnosis Procedure".

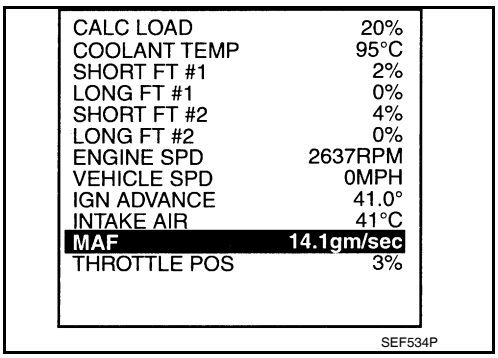

Diagnosis Procedure

INFOID:0000000001351407

1. INSPECTION START

Which malfunction (A or B) is duplicated?

A or B

A >> GO TO 3.
B >> GO TO 2.

2. CHECK INTAKE SYSTEM

Check the following for connection.
- Air duct
- Vacuum hoses
- Intake air passage between air duct to intake manifold

OK or NG

OK >> GO TO 3.
NG >> Reconnect the parts.

3. CHECK GROUND CONNECTIONS

1. Turn ignition switch OFF.
2. Loosen and retighten three ground screws on the body.
   Refer to EC-86, "Ground Inspection".

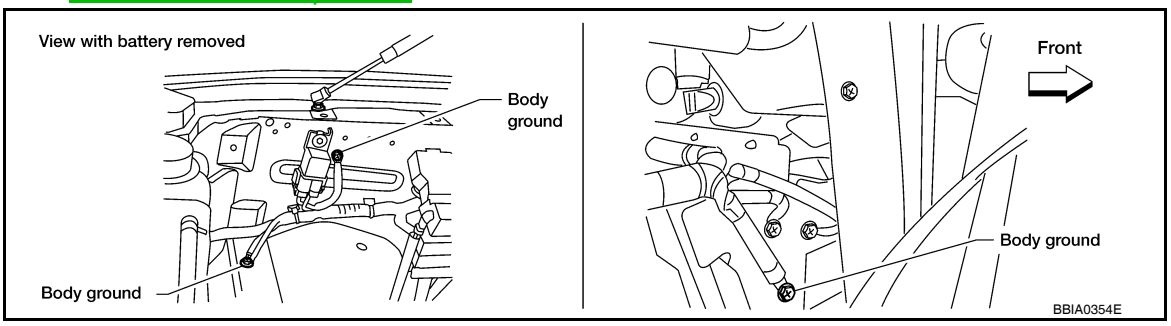

OK or NG

OK >> GO TO 4.
NG >> Repair or replace ground connections.

4. CHECK MAF SENSOR POWER SUPPLY CIRCUIT

1. Disconnect mass air flow (MAF) sensor harness connector.
2. Turn ignition switch ON.

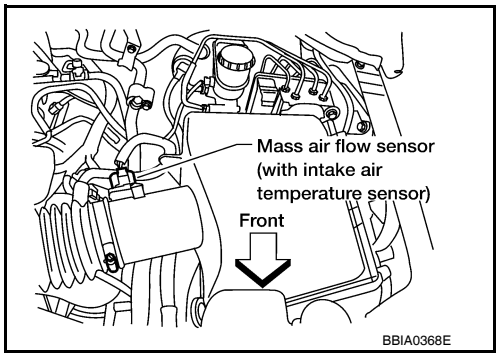

3. Check voltage between MAF sensor terminal 2 and ground with CONSULT-III or tester.

Voltage: Battery voltage

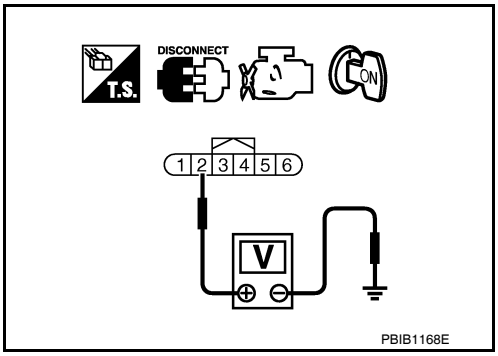

OK or NG

OK >> GO TO 6.
NG >> GO TO 5.

5. DETECT MALFUNCTIONING PART

Check the following.
- Harness connectors E2, F32
- Harness for open or short between IPDM E/R and mass air flow sensor
- Harness for open or short between mass air flow sensor and ECM

>> Repair harness or connectors.

6. CHECK MAF SENSOR GROUND CIRCUIT FOR OPEN AND SHORT

1. Turn ignition switch OFF.
2. Disconnect ECM harness connector.
3. Check harness continuity between MAF sensor terminal 3 and ECM terminal 67. Refer to Wiring Diagram.

Continuity should exist.

4. Also check harness for short to ground and short to power.

OK or NG

OK >> GO TO 7.
NG >> Repair open circuit or short to ground or short to power in harness or connectors.

7. CHECK MAF SENSOR INPUT SIGNAL CIRCUIT FOR OPEN AND SHORT

1. Check harness continuity between MAF sensor terminal 4 and ECM terminal 51. Refer to Wiring Diagram.

Continuity should exist.

2. Also check harness for short to ground and short to power.

OK or NG

OK >> GO TO 8.
NG >> Repair open circuit or short to ground or short to power in harness or connectors.

8. CHECK INTAKE AIR TEMPERATURE SENSOR

Refer to EC-120, "Component Inspection".

OK or NG

OK >> GO TO 9.
NG >> Replace intake air temperature sensor.

9. CHECK EVAP CONTROL SYSTEM PRESSURE SENSOR

Refer to EC-248, "Component Inspection".

OK or NG

OK >> GO TO 10.
NG >> Replace EVAP control system pressure sensor.

10. CHECK MASS AIR FLOW SENSOR

Refer to EC-111, "Component Inspection".

OK or NG

OK >> GO TO 11.
NG >> Replace mass air flow sensor.

11. CHECK INTERMITTENT INCIDENT

Refer to GI-35, "How to Check Terminal" and GI-38, "Intermittent Incident".

>> **INSPECTION END**

Component Inspection

INFOID:0000000001351408

MASS AIR FLOW SENSOR

With CONSULT-III

1. Reconnect all harness connectors disconnected.
2. Start engine and warm it up to normal operating temperature.
3. Connect CONSULT-III and select “DATA MONITOR” mode.
4. Select “MAS A/F SE-B1” and check indication under the following conditions.

Condition	MAS A/F SE-B1 (V)
Ignition switch ON (Engine stopped.)	Approx. 0.4
Idle (Engine is warmed-up to normal operating temperature.)	1.0 - 1.3
2,500 rpm (Engine is warmed-up to normal operating temperature.)	1.7 - 2.1
Idle to about 4,000 rpm	1.0 - 1.3 to Approx. 2.4*

*: Check for linear voltage rise in response to engine being increased to about 4,000 rpm.

5. If the voltage is out of specification, proceed the following.

a. Check for the cause of uneven air flow through mass air flow sensor. Refer to following.
   - Crushed air ducts
   - Malfunctioning seal of air cleaner element
   - Uneven dirt of air cleaner element
   - Improper specification of intake air system parts

b. If NG, repair or replace malfunctioning part and perform step 2 to 4 again.
   If OK, go to next step.

6. Turn ignition switch OFF.
7. Disconnect mass air flow sensor harness connector and reconnect it again.
8. Perform step 2 to 4 again.
9. If NG, clean or replace mass air flow sensor.

Without CONSULT-III

1. Reconnect all harness connectors disconnected.
2. Start engine and warm it up to normal operating temperature.
3. Check voltage between ECM terminal 51 (Mass air flow sensor signal) and ground.

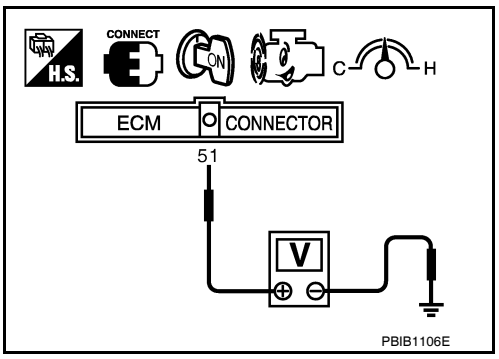

Condition	MAS A/F SE-B1 (V)
Ignition switch ON (Engine stopped.)	Approx. 0.4
Idle (Engine is warmed-up to normal operating temperature.)	1.0 - 1.3
2,500 rpm (Engine is warmed-up to normal operating temperature.)	1.7 - 2.1
Idle to about 4,000 rpm	1.0 - 1.3 to Approx. 2.4*

*: Check for linear voltage rise in response to engine being increased to about 4,000 rpm.

4. If the voltage is out of specification, proceed the following.

a. Check for the cause of uneven air flow through mass air flow sensor. Refer to following.
   - Crushed air ducts
   - Malfunctioning seal of air cleaner element
   - Uneven dirt of air cleaner element
   - Improper specification of intake air system parts

b. If NG, repair or replace malfunctioning part and perform step 2 and 3 again.
   If OK, go to next step.

5. Turn ignition switch OFF.
6. Disconnect mass air flow sensor harness connector and reconnect it again.
7. Perform step 2 and 3 again.
8. If NG, clean or replace mass air flow sensor.

P0102, P0103 MAF SENSOR

Component Description

INFOID:0000000001351410

The mass air flow sensor is placed in the stream of intake air. It measures the intake flow rate by measuring a part of the entire intake flow. The mass air flow sensor controls the temperature of the hot wire to a certain amount. The heat generated by the hot wire is reduced as the intake air flows around it. The more air, the greater the heat loss.
Therefore, the electric current supplied to the hot wire is changed to maintain the temperature of the hot wire as air flow increases. The ECM detects the air flow by means of this current change.

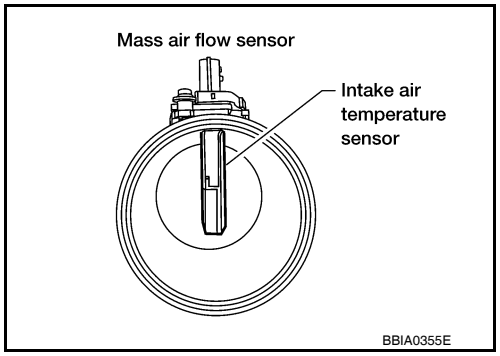

On Board Diagnosis Logic

INFOID:0000000001351412

These self-diagnoses have the one trip detection logic.

DTC No.	Trouble diagnosis name	DTC detecting condition	Possible cause
P0102 0102	Mass air flow sensor circuit low input	An excessively low voltage from the sensor is sent to ECM.	• Harness or connectors (The sensor circuit is open or shorted.) • Intake air leaks • Mass air flow sensor
P0103 0103	Mass air flow sensor circuit high input	An excessively high voltage from the sensor is sent to ECM.	• Harness or connectors (The sensor circuit is open or shorted.) • Mass air flow sensor

FAIL-SAFE MODE

When the malfunction is detected, the ECM enters fail-safe mode and the MIL lights up.

Detected items	Engine operating condition in fail-safe mode
Mass air flow sensor circuit	Engine speed will not rise more than 2,400 rpm due to the fuel cut.

DTC Confirmation Procedure

INFOID:0000000001351413

NOTE:
If DTC Confirmation Procedure has been previously conducted, always turn ignition switch OFF and wait at least 10 seconds before conducting the next test.

PROCEDURE FOR DTC P0102

With CONSULT-III
1. Start engine and wait at least 5 seconds.
2. Check DTC.
3. If DTC is detected, go to EC-114, "Diagnosis Procedure".

With GST
Follow the procedure “With CONSULT-III” above.

PROCEDURE FOR DTC P0103

With CONSULT-III
1. Turn ignition switch ON.
2. Wait at least 5 seconds.
3. Check DTC.
4. If DTC is detected, go to EC-114, "Diagnosis Procedure".
   If DTC is not detected, go to next step.
5. Start engine and wait at least 5 seconds.
6. Check DTC.
7. If DTC is detected, go to EC-114, "Diagnosis Procedure".

With GST
Follow the procedure “With CONSULT-III” above.

Diagnosis Procedure

INFOID:0000000001351415

1. INSPECTION START

Which malfunction (P0102 or P0103) is duplicated?

P0102 or P0103

P0102 >> GO TO 2.
P0103 >> GO TO 3.

2. CHECK INTAKE SYSTEM

Check the following for connection.
- Air duct
- Vacuum hoses
- Intake air passage between air duct to intake manifold

OK or NG

OK >> GO TO 3.
NG >> Reconnect the parts.

3. CHECK GROUND CONNECTIONS

1. Turn ignition switch OFF.
2. Loosen and retighten three ground screws on the body.
   Refer to EC-86, "Ground Inspection".

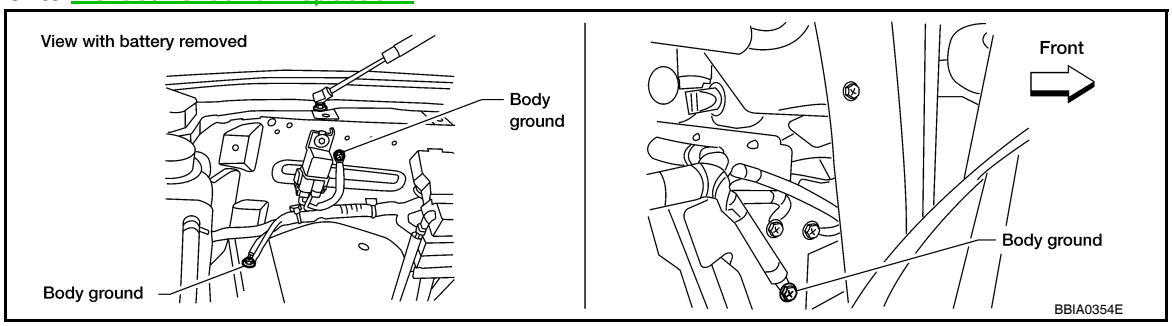

OK or NG

OK >> GO TO 4.
NG >> Repair or replace ground connections.

4. CHECK MAF SENSOR POWER SUPPLY CIRCUIT

1. Disconnect mass air flow (MAF) sensor harness connector.
2. Turn ignition switch ON.

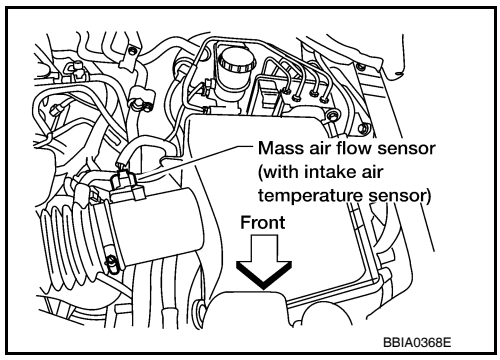

3. Check voltage between MAF sensor terminal 2 and ground with CONSULT-III or tester.

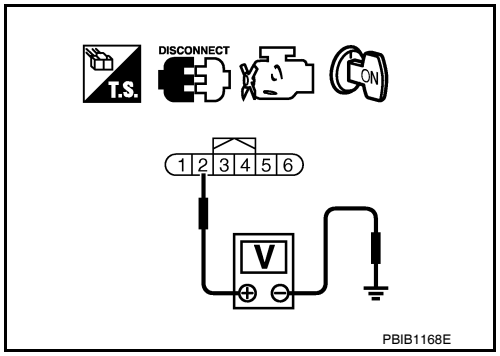

Voltage: Battery voltage

OK or NG

OK >> GO TO 6.
NG >> GO TO 5.

5. DETECT MALFUNCTIONING PART

Check the following.
- Harness connectors E2, F32
- Harness for open or short between IPDM E/R and mass air flow sensor
- Harness for open or short between mass air flow sensor and ECM

>> Repair harness or connectors.

6. CHECK MAF SENSOR GROUND CIRCUIT FOR OPEN AND SHORT

1. Turn ignition switch OFF.
2. Disconnect ECM harness connector.
3. Check harness continuity between MAF sensor terminal 3 and ECM terminal 67. Refer to Wiring Diagram.

Continuity should exist.

4. Also check harness for short to ground and short to power.

OK or NG

OK >> GO TO 7.
NG >> Repair open circuit or short to ground or short to power in harness or connectors.

7. CHECK MAF SENSOR INPUT SIGNAL CIRCUIT FOR OPEN AND SHORT

1. Check harness continuity between MAF sensor terminal 4 and ECM terminal 51. Refer to Wiring Diagram.

Continuity should exist.

2. Also check harness for short to ground and short to power.

OK or NG

OK >> GO TO 8.
NG >> Repair open circuit or short to ground or short to power in harness or connectors.

8. CHECK MASS AIR FLOW SENSOR

Refer to EC-115, "Component Inspection".

OK or NG

OK >> GO TO 9.
NG >> Replace mass air flow sensor.

9. CHECK INTERMITTENT INCIDENT

Refer to GI-35, "How to Check Terminal" and GI-38, "Intermittent Incident".

>> **INSPECTION END**

Component Inspection

INFOID:0000000001351416

MASS AIR FLOW SENSOR

With CONSULT-III

1. Reconnect all harness connectors disconnected.
2. Start engine and warm it up to normal operating temperature.
3. Connect CONSULT-III and select “DATA MONITOR” mode.
4. Select “MAS A/F SE-B1” and check indication under the following conditions.

Condition	MAS A/F SE-B1 (V)
Ignition switch ON (Engine stopped.)	Approx. 0.4
Idle (Engine is warmed-up to normal operating temperature.)	1.0 - 1.3
2,500 rpm (Engine is warmed-up to normal operating temperature.)	1.7 - 2.1
Idle to about 4,000 rpm	1.0 - 1.3 to Approx. 2.4*

*: Check for linear voltage rise in response to engine being increased to about 4,000 rpm.

5. If the voltage is out of specification, proceed the following.

a. Check for the cause of uneven air flow through mass air flow sensor. Refer to following.
   - Crushed air ducts
   - Malfunctioning seal of air cleaner element
   - Uneven dirt of air cleaner element
   - Improper specification of intake air system parts

b. If NG, repair or replace malfunctioning part and perform step 2 to 4 again.
   If OK, go to next step.

6. Turn ignition switch OFF.
7. Disconnect mass air flow sensor harness connector and reconnect it again.
8. Perform step 2 to 4 again.
9. If NG, clean or replace mass air flow sensor.

Without CONSULT-III

1. Reconnect all harness connectors disconnected.
2. Start engine and warm it up to normal operating temperature.
3. Check voltage between ECM terminal 51 (Mass air flow sensor signal) and ground.

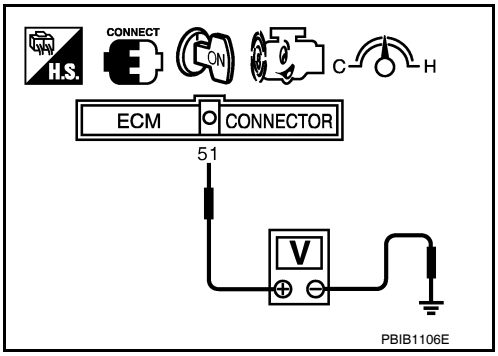

Condition	MAS A/F SE-B1 (V)
Ignition switch ON (Engine stopped.)	Approx. 0.4
Idle (Engine is warmed-up to normal operating temperature.)	1.0 - 1.3
2,500 rpm (Engine is warmed-up to normal operating temperature.)	1.7 - 2.1
Idle to about 4,000 rpm	1.0 - 1.3 to Approx. 2.4*

*: Check for linear voltage rise in response to engine being increased to about 4,000 rpm.

4. If the voltage is out of specification, proceed the following.

a. Check for the cause of uneven air flow through mass air flow sensor. Refer to following.
   - Crushed air ducts
   - Malfunctioning seal of air cleaner element
   - Uneven dirt of air cleaner element
   - Improper specification of intake air system parts

b. If NG, repair or replace malfunctioning part and perform step 2 and 3 again.
   If OK, go to next step.

5. Turn ignition switch OFF.
6. Disconnect mass air flow sensor harness connector and reconnect it again.
7. Perform step 2 and 3 again.

8. If NG, clean or replace mass air flow sensor.

P0112, P0113 IAT SENSOR

Component Description

INFOID:0000000001351418

The intake air temperature sensor is built-into mass air flow sensor. The sensor detects intake air temperature and transmits a signal to the ECM.
The temperature sensing unit uses a thermistor which is sensitive to the change in temperature. Electrical resistance of the thermistor decreases in response to the temperature rise.

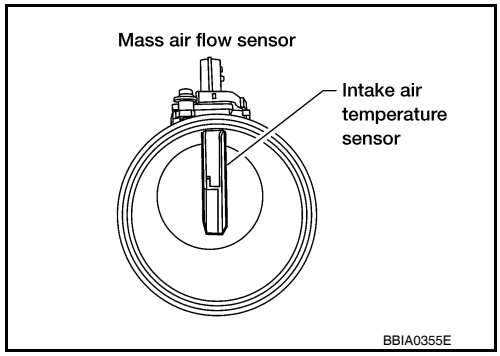

<Reference data>

Intake air temperature °C (°F)	Voltage* V	Resistance kΩ
25 (77)	3.3	1.800 - 2.200
80 (176)	1.2	0.283 - 0.359

*: This data is reference value and is measured between ECM terminal 34 (Intake air temperature sensor) and ground.

CAUTION:
Do not use ECM ground terminals when measuring input/output voltage. Doing so may result in damage to the ECM's transistor. Use a ground other than ECM terminals, such as the ground.

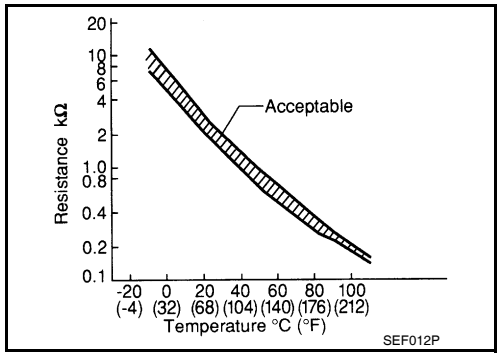

On Board Diagnosis Logic

INFOID:0000000001351419

DTC No.	Trouble diagnosis name	DTC detecting condition	Possible cause
P0112 0112	Intake air temperature sensor circuit low input	An excessively low voltage from the sensor is sent to ECM.	• Harness or connectors (The sensor circuit is open or shorted.) • Intake air temperature sensor
P0113 0113	Intake air temperature sensor circuit high input	An excessively high voltage from the sensor is sent to ECM.	

DTC Confirmation Procedure

INFOID:0000000001351420

NOTE:
If DTC Confirmation Procedure has been previously conducted, always turn ignition switch OFF and wait at least 10 seconds before conducting the next test.

WITH CONSULT-III

1. Turn ignition switch ON.
2. Wait at least 5 seconds.
3. Check 1st trip DTC.
4. If 1st trip DTC is detected, go to EC-118, "Diagnosis Procedure".

WITH GST

Follow the procedure “WITH CONSULT-III” above.

Diagnosis Procedure

INFOID:0000000001351422

1. CHECK GROUND CONNECTIONS

1. Turn ignition switch OFF.
2. Loosen and retighten three ground screws on the body.

Refer to EC-86, "Ground Inspection".

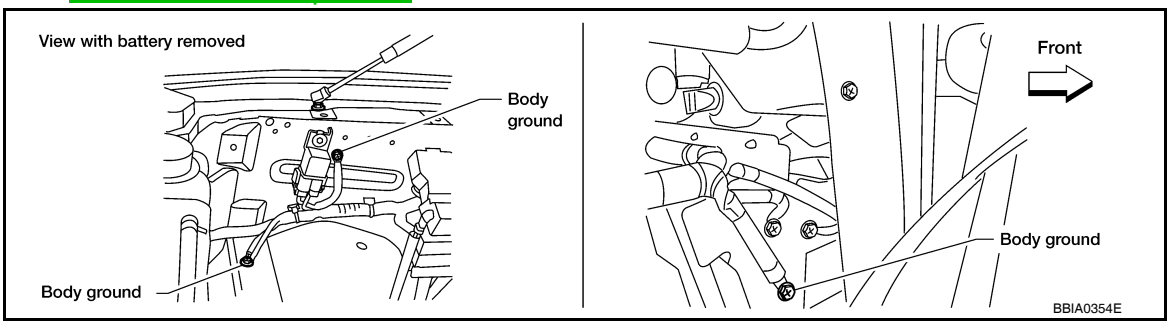

OK or NG

OK >> GO TO 2.
NG >> Repair or replace ground connections.

2. CHECK INTAKE AIR TEMPERATURE SENSOR POWER SUPPLY CIRCUIT

1. Disconnect mass air flow sensor (with intake air temperature sensor) harness connector.
2. Turn ignition switch ON.

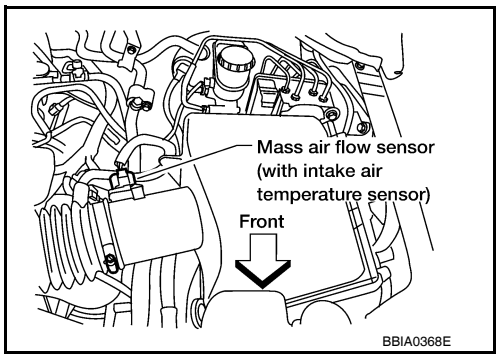

3. Check voltage between mass air flow sensor terminal 5 and ground.

Voltage: Approximately 5V

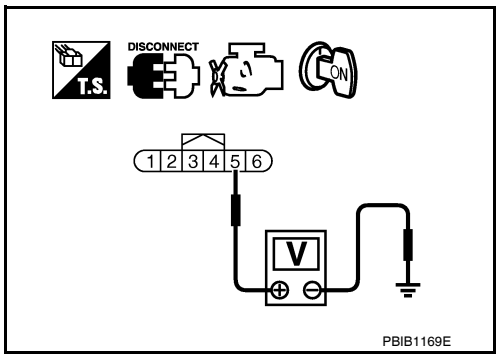

OK or NG

OK >> GO TO 3.
NG >> Repair harness or connectors.

3. CHECK INTAKE AIR TEMPERATURE SENSOR GROUND CIRCUIT FOR OPEN AND SHORT

1. Turn ignition switch OFF.
2. Disconnect ECM harness connector.
3. Check harness continuity between mass air flow sensor terminal 6 and ECM terminal 67. Refer to Wiring Diagram.

Continuity should exist.

4. Also check harness for short to ground and short to power.

OK or NG

OK >> GO TO 4.
NG >> Repair open circuit or short to ground or short to power in harness or connectors.

4. CHECK INTAKE AIR TEMPERATURE SENSOR

Refer to EC-120, "Component Inspection".

OK or NG

OK >> GO TO 5.
NG >> Replace mass air flow sensor (with intake air temperature sensor).

5. CHECK INTERMITTENT INCIDENT

Refer to GI-35, "How to Check Terminal" and GI-38, "Intermittent Incident".

>> **INSPECTION END**

Component Inspection

INFOID:0000000001351423

INTAKE AIR TEMPERATURE SENSOR

1. Check resistance between mass air flow sensor terminals 5 and 6 under the following conditions.

Intake air temperature °C (°F)	Resistance kΩ
25 (77)	1.800 - 2.200

2. If NG, replace mass air flow sensor (with intake air temperature sensor).

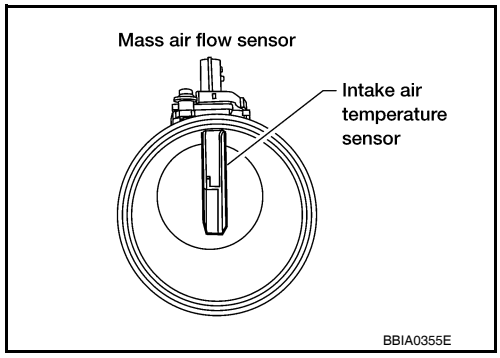

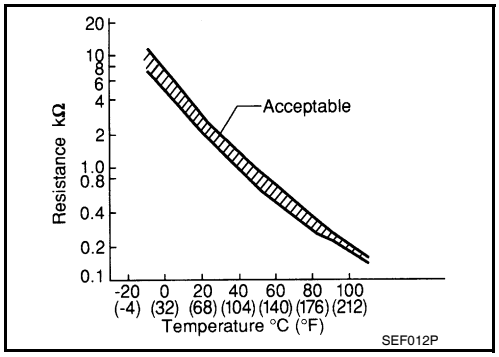

P0116 ECT SENSOR

Component Description

INFOID:0000000003760274

The engine coolant temperature sensor is used to detect the engine coolant temperature. The sensor modifies a voltage signal from the ECM. The modified signal returns to the ECM as the engine coolant temperature input. The sensor uses a thermistor which is sensitive to the change in temperature. The electrical resistance of the thermistor decreases as temperature increases.

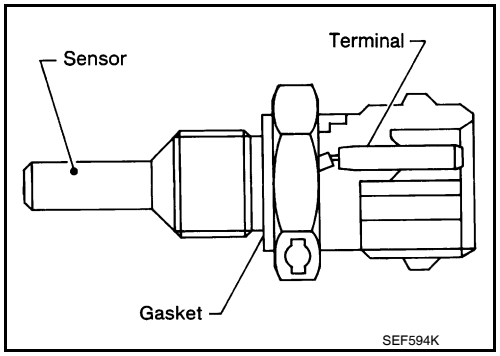

<Reference data>

Engine coolant temperature °C (°F)	Voltage* V	Resistance kΩ
–10 (14)	4.4	7.0 - 11.4
20 (68)	3.5	2.1 - 2.9
50 (122)	2.2	0.68 - 1.00
90 (194)	0.9	0.236 - 0.260

*: This data is reference value and is measured between ECM terminal 73 (Engine coolant temperature sensor) and ground.

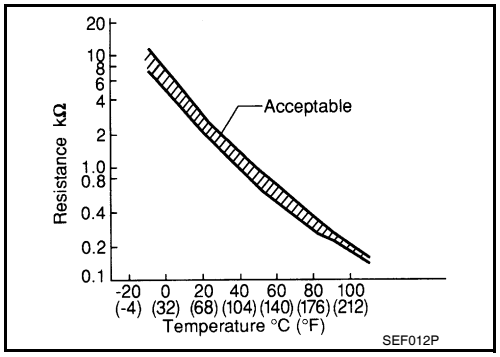

CAUTION:
Do not use ECM ground terminals when measuring input/output voltage. Doing so may result in damage to the ECM's transistor. Use a ground other than ECM terminals, such as the ground.

On Board Diagnosis Logic

INFOID:0000000003760275

DTC No.	Trouble diagnosis name	DTC detecting condition	Possible cause
P0116 0116	Engine coolant temperature sensor circuit range/performance	Engine coolant temperature signal from engine coolant temperature sensor does not fluctuate, even when some time has passed after starting the engine with pre-warming up condition.	• Harness or connectors (High or low resistance in the circuit) • Engine coolant temperature sensor

DTC Confirmation Procedure

INFOID:0000000003760276

NOTE:
- **If DTC P0116 is displayed with P0117 or P0118, first perform the trouble diagnosis for DTC P0117, P0118. Refer to EC-125, "DTC Confirmation Procedure".**
- If DTC confirmation procedure has been previously conducted, always turn ignition switch OFF and wait at least 10 seconds before conducting the next test.

TESTING CONDITION:
Before performing the following procedure, do not fill with the fuel.

1. Start engine and warm it up to normal operating temperature.
2. Rev engine up to 2,000 rpm for more than10 minutes.
3. Move the vehicle to a cool place, then stop engine and turn ignition switch OFF.
4. Check resistance between “fuel level sensor and fuel pump” terminals 3 and 4.
5. Soak the vehicle until the resistance between “fuel level sensor and fuel pump” terminals 3 and 4 becomes 0.5 kΩ higher than the value measured before soaking.
   CAUTION:
   Never turn ignition switch ON during the soaking time.
   NOTE:

Soak time changes depending on ambient air temperature. It may take several hours.

6. Start engine and let it idle for 5 minutes.
7. Check 1st trip DTC.
8. If 1st trip DTC is detected, go to EC-122, "Diagnosis Procedure".

Diagnosis Procedure

INFOID:0000000003760277

1. CHECK GROUND CONNECTIONS

1. Turn ignition switch OFF.
2. Loosen and retighten three ground screws on the body.
   Refer to EC-86, "Ground Inspection".

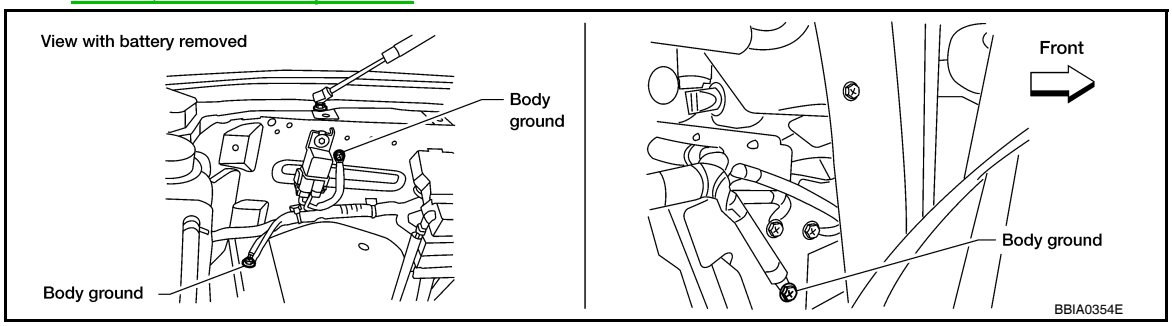

OK or NG

OK >> GO TO 2.
NG >> Repair or replace ground connections.

2. CHECK ENGINE COOLANT TEMPERATURE SENSOR

Refer to EC-122, "Component Inspection".

OK or NG

OK >> GO TO 3.
NG >> Replace engine coolant temperature sensor.

3. CHECK INTERMITTENT INCIDENT

Refer to GI-35, "How to Check Terminal" and GI-38, "Intermittent Incident".
For Wiring Diagram, refer to EC-439, "Wiring Diagram - ENGINE CONTROL SYSTEM -".

>> **INSPECTION END**

Component Inspection

INFOID:0000000003760278

ENGINE COOLANT TEMPERATURE SENSOR

1. Check resistance between engine coolant temperature sensor terminals 1 and 2 as shown in the figure.

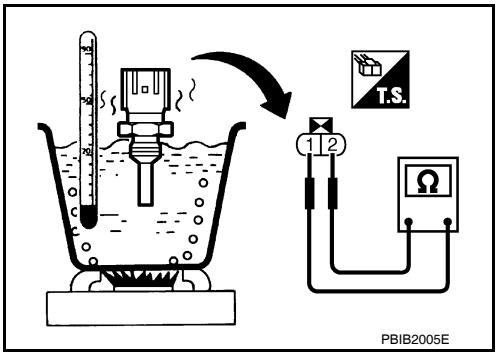

<Reference data>

Engine coolant temperature °C (°F)	Resistance kΩ
20 (68)	2.1 - 2.9
50 (122)	0.68 - 1.00
90 (194)	0.236 - 0.260

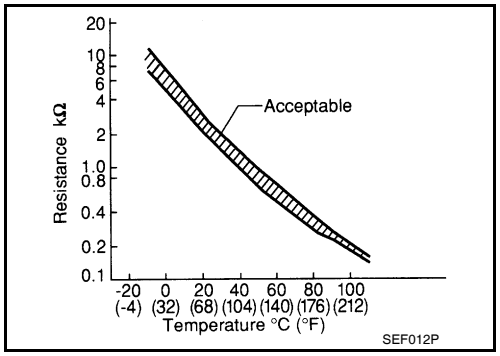

2. If NG, replace engine coolant temperature sensor.

P0117, P0118 ECT SENSOR

Component Description

INFOID:0000000001351425

The engine coolant temperature sensor is used to detect the engine coolant temperature. The sensor modifies a voltage signal from the ECM. The modified signal returns to the ECM as the engine coolant temperature input. The sensor uses a thermistor which is sensitive to the change in temperature. The electrical resistance of the thermistor decreases as temperature increases.

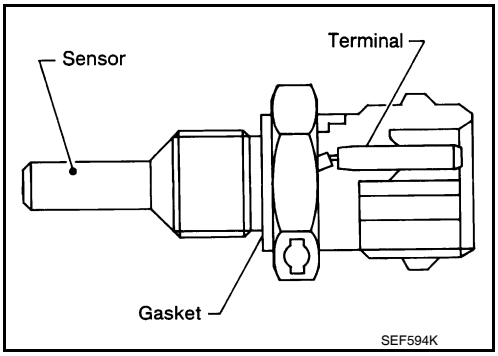

<Reference data>

Engine coolant temperature °C (°F)	Voltage* V	Resistance kΩ
–10 (14)	4.4	7.0 - 11.4
20 (68)	3.5	2.1 - 2.9
50 (122)	2.2	0.68 - 1.00
90 (194)	0.9	0.236 - 0.260

*: This data is reference value and is measured between ECM terminal 73 (Engine coolant temperature sensor) and ground.

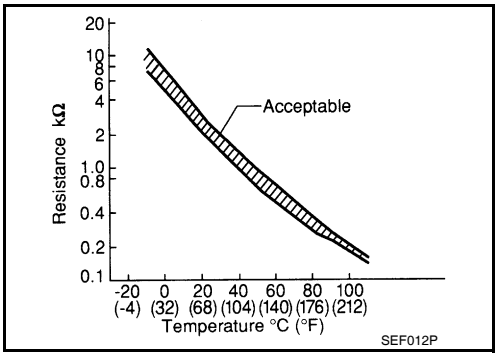

CAUTION:

Do not use ECM ground terminals when measuring input/output voltage. Doing so may result in damage to the ECM's transistor. Use a ground other than ECM terminals, such as the ground.

On Board Diagnosis Logic

INFOID:0000000001351426

These self-diagnoses have the one trip detection logic.

DTC No.	Trouble Diagnosis Name	DTC Detecting Condition	Possible Cause
P0117 0117	Engine coolant temperature sensor circuit low input	An excessively low voltage from the sensor is sent to ECM.	• Harness or connectors (The sensor circuit is open or shorted.) • Engine coolant temperature sensor
P0118 0118	Engine coolant temperature sensor circuit high input	An excessively high voltage from the sensor is sent to ECM.	

FAIL-SAFE MODE

When the malfunction is detected, the ECM enters fail-safe mode and the MIL lights up.

Detected items	Engine operating condition in fail-safe mode	
Engine coolant temperature sensor circuit	Engine coolant temperature will be determined by ECM based on the following condition. CONSULT-III displays the engine coolant temperature decided by ECM.	
	Condition	Engine coolant temperature decided (CONSULT-III display)
	Just as ignition switch is turned ON or START	40°C (104°F)
	Approx 4 minutes or more after engine starting	80°C (176°F)
	Except as shown above	40 - 80°C (104 - 176°F) (Depends on the time)
	When the fail-safe system for engine coolant temperature sensor is activated, the cooling fan operates while engine is running.	

DTC Confirmation Procedure

INFOID:0000000001351427

NOTE:
If DTC Confirmation Procedure has been previously conducted, always turn ignition switch OFF and wait at least 10 seconds before conducting the next test.

WITH CONSULT-III

1. Turn ignition switch ON.
2. Wait at least 5 seconds.
3. Check DTC.
4. If DTC is detected, go to EC-125, "Diagnosis Procedure".

WITH GST

Follow the procedure “WITH CONSULT-III” above.

Diagnosis Procedure

INFOID:0000000001351429

1. CHECK GROUND CONNECTIONS

1. Turn ignition switch OFF.
2. Loosen and retighten three ground screws on the body.
   Refer to EC-86, "Ground Inspection".

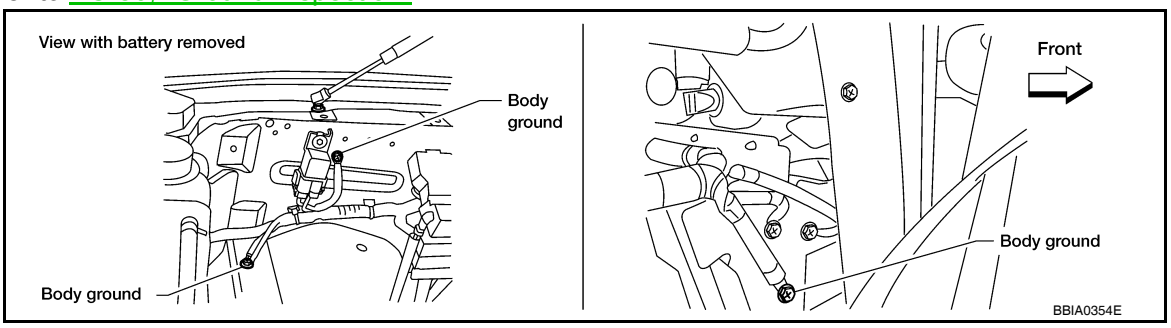

OK or NG

OK >> GO TO 2.
NG >> Repair or replace ground connections.

2. CHECK ECT SENSOR POWER SUPPLY CIRCUIT

1. Disconnect engine coolant temperature (ECT) sensor (1) harness connector.

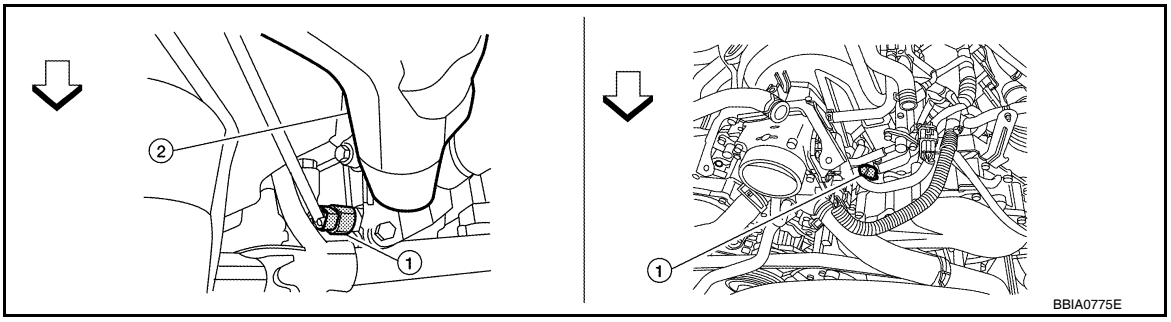

1. Engine coolant temperature (ETC) sensor
2. Intake manifold

2. Turn ignition switch ON.

3. Check voltage between ECT sensor (1) terminal 1 and ground with CONSULT-III or tester.

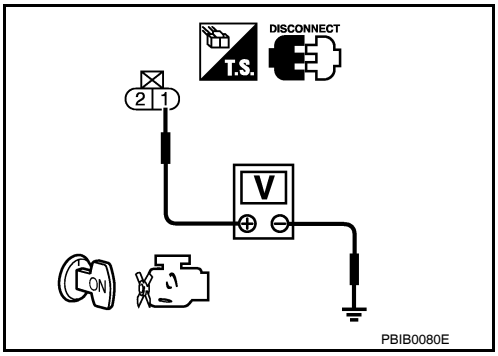

Voltage: Approximately 5V

OK or NG

OK >> GO TO 4.
NG >> GO TO 3.

3. DETECT MALFUNCTIONING RART

Check the following.
- Harness connector F26, F101
- Harness for open or short between ECM and engine coolant temperature sensor

>> Repair open circuit or short to ground or short to power in harness or connectors.

4. CHECK ECT SENSOR GROUND CIRCUIT FOR OPEN AND SHORT

1. Turn ignition switch OFF.
2. Disconnect ECM harness connector.
3. Check harness continuity between ECT sensor terminal 2 and ECM terminal 67. Refer to Wiring Diagram.

Continuity should exist.

4. Also check harness for short to ground and short to power.

OK or NG

OK >> GO TO 6.
NG >> GO TO 5.

5. DETECT MALFUNCTIONING PART

Check the following.
- Harness connector F26, F101
- Harness for open and short between ECT sensor and ECM

>> Repair open circuit or short to ground or short to power in harness or connectors.

6. CHECK ENGINE COOLANT TEMPERATURE SENSOR

Refer to EC-126, "Component Inspection".

OK or NG

OK >> GO TO 7.
NG >> Replace engine coolant temperature sensor.

7. CHECK INTERMITTENT INCIDENT

Refer to GI-35, "How to Check Terminal" and GI-38, "Intermittent Incident".

>> **INSPECTION END**

Component Inspection

INFOID:0000000001351430

ENGINE COOLANT TEMPERATURE SENSOR

1. Check resistance between engine coolant temperature sensor terminals 1 and 2 as shown in the figure.

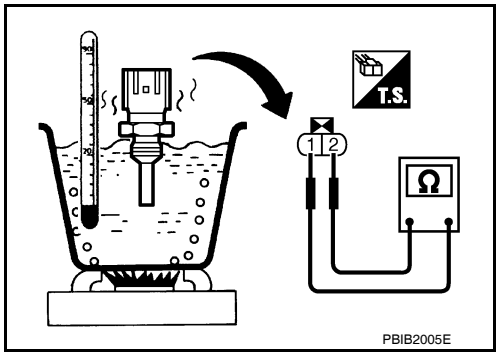

<Reference data>

Engine coolant temperature °C (°F)	Resistance kΩ
20 (68)	2.1 - 2.9
50 (122)	0.68 - 1.00
90 (194)	0.236 - 0.260

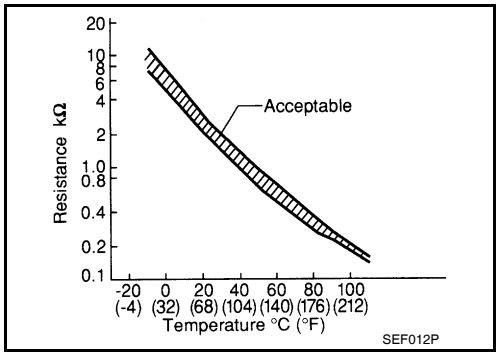

2. If NG, replace engine coolant temperature sensor.

P0122, P0123 TP SENSOR

Component Description

INFOID:0000000001351432

Electric throttle control actuator consists of throttle control motor, throttle position sensor, etc. The throttle position sensor responds to the throttle valve movement.
The throttle position sensor has the two sensors. These sensors are a kind of potentiometers which transform the throttle valve position into output voltage, and emit the voltage signal to the ECM. In addition, these sensors detect the opening and closing speed of the throttle valve and feed the voltage signals to the ECM. The ECM judges the current opening angle of the throttle valve from these signals and the ECM controls the throttle control motor to make the throttle valve opening angle properly in response to driving condition.

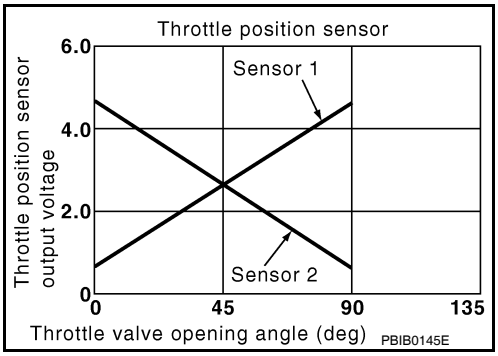

On Board Diagnosis Logic

INFOID:0000000001351434

These self-diagnoses have the one trip detection logic.

DTC No.	Trouble diagnosis name	DTC detecting condition	Possible cause
P0122 0122	Throttle position sensor 2 circuit low input	An excessively low voltage from the TP sensor 2 is sent to ECM.	• Harness or connectors (TP sensor 2 circuit is open or shorted.) (APP sensor 2 circuit is shorted.) • Electric throttle control actuator (TP sensor 2) • Accelerator pedal position sensor (APP sensor 2)
P0123 0123	Throttle position sensor 2 circuit high input	An excessively high voltage from the TP sensor 2 is sent to ECM.	

FAIL-SAFE MODE

When the malfunction is detected, ECM enters fail-safe mode and the MIL lights up.

Engine operation condition in fail-safe mode
The ECM controls the electric throttle control actuator in regulating the throttle opening in order for the idle position to be within +10 degrees. The ECM regulates the opening speed of the throttle valve to be slower than the normal condition. So, the acceleration will be poor.

DTC Confirmation Procedure

INFOID:0000000001351435

NOTE:
If DTC Confirmation Procedure has been previously conducted, always turn ignition switch OFF and wait at least 10 seconds before conducting the next test.
TESTING CONDITION:
Before performing the following procedure, confirm that battery voltage is more than 8V at idle.

WITH CONSULT-III

1. Start engine and let it idle for 1 second.
2. Check DTC.
3. If DTC is detected, go to EC-128, "Diagnosis Procedure" .

WITH GST

Follow the procedure “WITH CONSULT-III” above.

Diagnosis Procedure

INFOID:0000000001351437

1. CHECK GROUND CONNECTIONS

1. Turn ignition switch OFF.
2. Loosen and retighten three ground screws on the body.

Refer to EC-86, "Ground Inspection" .

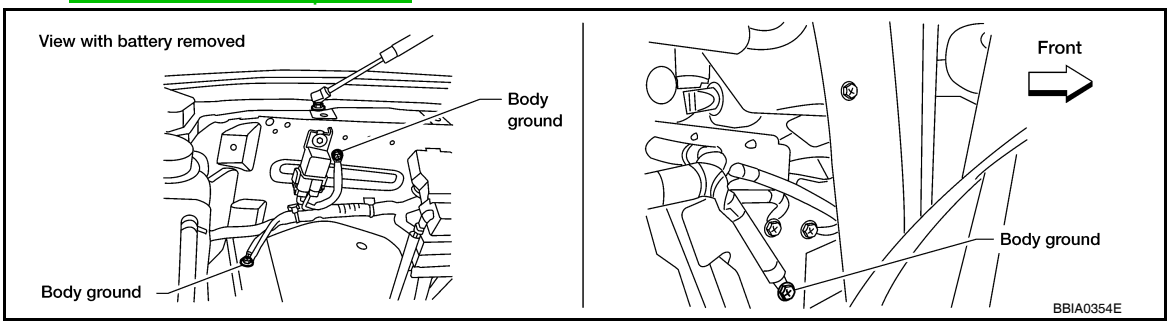

OK or NG

OK >> GO TO 2.
NG >> Repair or replace ground connections.

2. CHECK THROTTLE POSITION SENSOR 2 POWER SUPPLY CIRCUIT-I

1. Disconnect electric throttle control actuator harness connector.
2. Turn ignition switch ON.

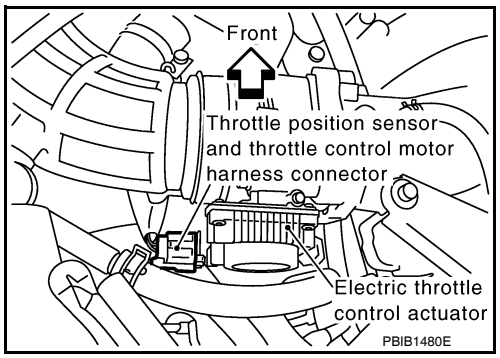

3. Check voltage between electric throttle control actuator terminal 2 and ground with CONSULT-III or tester.

Voltage: Approximately 5V

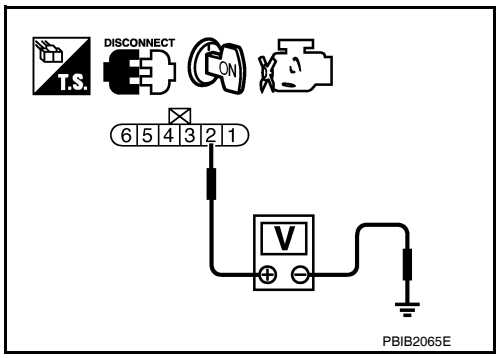

OK or NG

OK >> GO TO 7.
NG >> GO TO 3.

3. CHECK THROTTLE POSITION SENSOR 2 POWER SUPPLY CIRCUIT-II

1. Turn ignition switch OFF.
2. Disconnect ECM harness connector.
3. Check harness continuity between electric throttle control actuator terminal 2 and ECM terminal 47. Refer to Wiring Diagram.

Continuity should exist.

OK or NG

OK >> GO TO 4.
NG >> Repair or replace open circuit.

4. CHECK THROTTLE POSITION SENSOR 2 POWER SUPPLY CIRCUIT-III

Check harness for short to power and short to ground, between the following terminals.

ECM terminal	Sensor terminal	Reference Wiring Diagram
47	Electric throttle control actuator terminal 2	EC-439, "Wiring Diagram - ENGINE CONTROL SYSTEM -"
91	APP sensor terminal 6	

OK or NG

OK >> GO TO 5.
NG >> Repair short to ground or short to power in harness or connectors.

5. CHECK ACCELERATOR PEDAL POSITION SENSOR

Refer to EC-384, "Component Inspection" .

OK or NG

OK >> GO TO 11.
NG >> GO TO 6.

6. REPLACE ACCELERATOR PEDAL ASSEMBLY

1. Replace the accelerator pedal assembly.
2. Perform EC-18, "Accelerator Pedal Released Position Learning" .
3. Perform EC-18, "Throttle Valve Closed Position Learning" .
4. Perform EC-18, "Idle Air Volume Learning" .

>> **INSPECTION END**

7. CHECK THROTTLE POSITION SENSOR 2 GROUND CIRCUIT FOR OPEN AND SHORT

1. Turn ignition switch OFF.
2. Disconnect ECM harness connector.
3. Check harness continuity between electric throttle control actuator terminal 4 and ECM terminal 66. Refer to Wiring Diagram.

Continuity should exist.

4. Also check harness for short to ground and short to power.

OK or NG

OK >> GO TO 8.
NG >> Repair open circuit or short to ground or short to power in harness or connectors.

8. CHECK THROTTLE POSITION SENSOR 2 INPUT SIGNAL CIRCUIT FOR OPEN AND SHORT

1. Check harness continuity between ECM terminal 69 and electric throttle control actuator terminal 3. Refer to Wiring Diagram.

Continuity should exist.

2. Also check harness for short to ground and short to power.

OK or NG

OK >> GO TO 9.
NG >> Repair open circuit or short to ground or short to power in harness or connectors.

9. CHECK THROTTLE POSITION SENSOR

Refer to EC-131, "Component Inspection" .

OK or NG

OK >> GO TO 11.
NG >> GO TO 10.

10. REPLACE ELECTRIC THROTTLE CONTROL ACTUATOR

1. Replace the electric throttle control actuator.
2. Perform EC-18, "Throttle Valve Closed Position Learning" .
3. Perform EC-18, "Idle Air Volume Learning" .

>> **INSPECTION END**

11. CHECK INTERMITTENT INCIDENT

Refer to GI-35, "How to Check Terminal" and GI-38, "Intermittent Incident".

>> **INSPECTION END**

Component Inspection

INFOID:0000000001351438

THROTTLE POSITION SENSOR

1. Reconnect all harness connectors disconnected.
2. Perform EC-18, "Throttle Valve Closed Position Learning" .
3. Turn ignition switch ON.
4. Set selector lever to D position.
5. Check voltage between ECM terminals 50 (TP sensor 1 signal), 69 (TP sensor 2 signal) and ground under the following conditions.

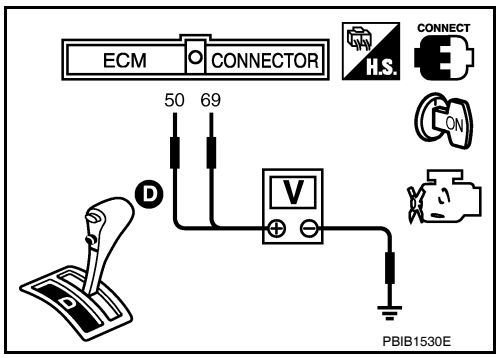

Terminal	Accelerator pedal	Voltage
50 (Throttle position sensor 1)	Fully released	More than 0.36V
	Fully depressed	Less than 4.75V
69 (Throttle position sensor 2)	Fully released	Less than 4.75V
	Fully depressed	More than 0.36V

6. If NG, replace electric throttle control actuator and go to the next step.
7. Perform EC-18, "Throttle Valve Closed Position Learning" .
8. Perform EC-18, "Idle Air Volume Learning" .

P0125 ECT SENSOR

Component Description

INFOID:0000000001351440

The engine coolant temperature sensor is used to detect the engine coolant temperature. The sensor modifies a voltage signal from the ECM. The modified signal returns to the ECM as the engine coolant temperature input. The sensor uses a thermistor which is sensitive to the change in temperature. The electrical resistance of the thermistor decreases as temperature increases.

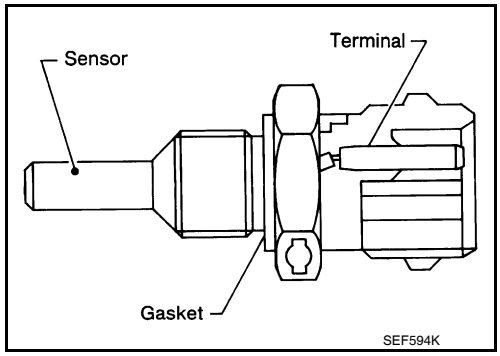

<Reference data>

Engine coolant temperature °C (°F)	Voltage* V	Resistance kΩ
–10 (14)	4.4	7.0 - 11.4
20 (68)	3.5	2.1 - 2.9
50 (122)	2.2	0.68 - 1.00
90 (194)	0.9	0.236 - 0.260

*: This data is reference value and is measured between ECM terminal 73 (Engine coolant temperature sensor) and ground.

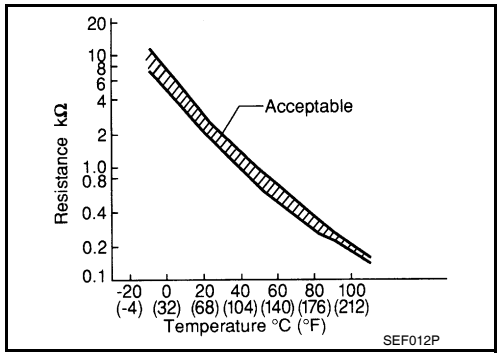

CAUTION:

Do not use ECM ground terminals when measuring input/output voltage. Doing so may result in damage to the ECM's transistor. Use a ground other than ECM terminals, such as the ground.

On Board Diagnosis Logic

INFOID:0000000001351441

DTC No.	Trouble diagnosis name	DTC detecting condition	Possible cause
P0125 0125	Insufficient engine coolant temperature for closed loop fuel control	• Voltage sent to ECM from the sensor is not practical, even when some time has passed after starting the engine. • Engine coolant temperature is insufficient for closed loop fuel control.	• Harness or connectors (High resistance in the circuit) • Engine coolant temperature sensor • Thermostat

DTC Confirmation Procedure

INFOID:0000000001351442

CAUTION:

Be careful not to overheat engine.

NOTE:

- **If DTC P0125 is displayed with P0117 or P0118, first perform the trouble diagnosis for DTC P0117, P0118. Refer to EC-125, "DTC Confirmation Procedure".**
- **If DTC P0125 is displayed with P0116, first perform the trouble diagnosis for DTC P011. Refer to EC-121, "DTC Confirmation Procedure".**
- If DTC confirmation procedure has been previously conducted, always turn ignition switch OFF and wait at least 10 seconds before conducting the next test.

WITH CONSULT-III

1. Turn ignition switch ON.
2. Select “DATA MONITOR” mode with CONSULT-III.
3. Check that “COOLAN TEMP/S” is above 31°C (88°F).
   If it is above 31°C (88°F), the test result will be OK.
   If it is below 31°C (88°F), go to following step.

4. Start engine and run it for 65 minutes at idle speed.
   If "COOLAN TEMP/S" increases to more than 31°C (88°F) within 65 minutes, stop engine because the test result will be OK.
5. Check 1st trip DTC.
6. If 1st trip DTC is detected, go to EC-133, "Diagnosis Procedure" .

WITH GST

Follow the procedure "WITH CONSULT-III" above.

Diagnosis Procedure

INFOID:0000000001351443

1. CHECK GROUND CONNECTIONS

1. Turn ignition switch OFF.
2. Loosen and retighten three ground screws on the body.
   Refer to EC-86, "Ground Inspection" .

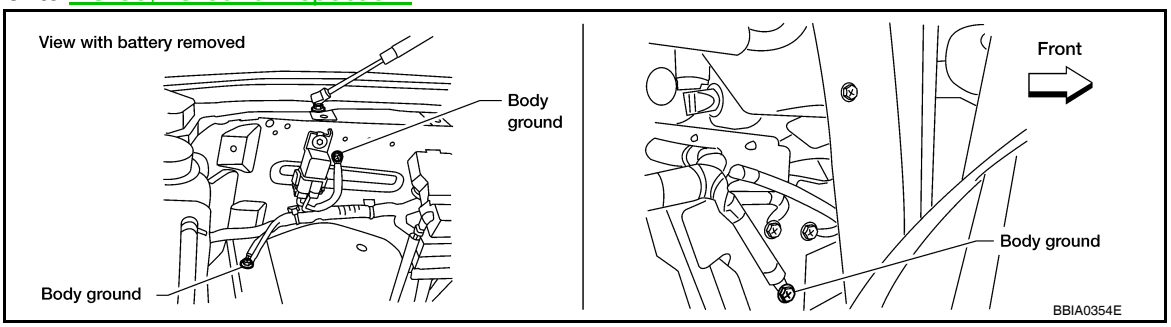

OK or NG

OK >> GO TO 2.
NG >> Repair or replace ground connections.

2. CHECK ENGINE COOLANT TEMPERATURE SENSOR

Refer to EC-133, "Component Inspection" .

OK or NG

OK >> GO TO 3.
NG >> Replace engine coolant temperature sensor.

3. CHECK THERMOSTAT OPERATION

When the engine is cold [lower than 70°C (158°F)] condition, grasp lower radiator hose and confirm the engine coolant does not flow.

OK or NG

OK >> GO TO 4.
NG >> Repair or replace thermostat. Refer to CO-22, "Removal and Installation" .

4. CHECK INTERMITTENT INCIDENT

Refer to GI-35, "How to Check Terminal" and GI-38, "Intermittent Incident".
Refer to EC-439, "Wiring Diagram - ENGINE CONTROL SYSTEM -" .

>> **INSPECTION END**

Component Inspection

INFOID:0000000001351444

ENGINE COOLANT TEMPERATURE SENSOR

1. Check resistance between engine coolant temperature sensor terminals 1 and 2 as shown in the figure.

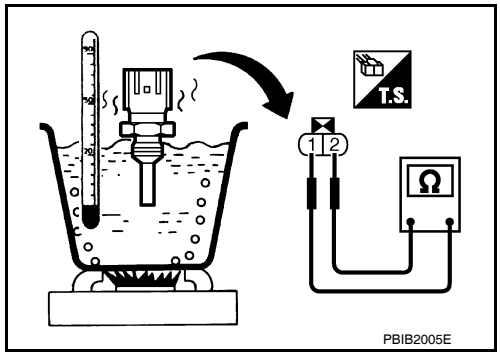

<Reference data>

Engine coolant temperature °C (°F)	Resistance kΩ
20 (68)	2.1 - 2.9
50 (122)	0.68 - 1.00
90 (194)	0.236 - 0.260

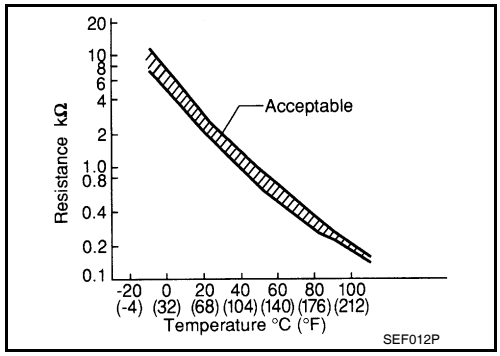

2. If NG, replace engine coolant temperature sensor.

P0127 IAT SENSOR

Component Description

INFOID:0000000001351446

The intake air temperature sensor is built into mass air flow sensor. The sensor detects intake air temperature and transmits a signal to the ECM.
The temperature sensing unit uses a thermistor which is sensitive to the change in temperature. Electrical resistance of the thermistor decreases in response to the temperature rise.

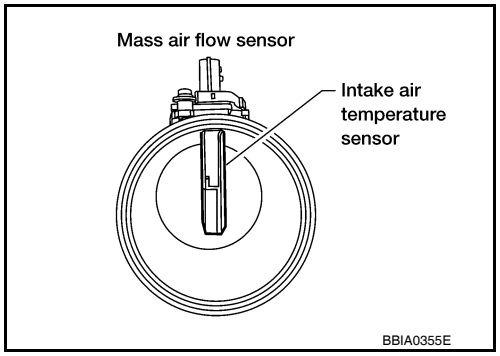

<Reference data>

Intake air temperature °C (°F)	Voltage* V	Resistance kΩ
25 (77)	3.3	1.800 - 2.200
80 (176)	1.2	0.283 - 0.359

*: This data is reference value and is measured between ECM terminal 34 (Intake air temperature sensor) and ground.

CAUTION:
Do not use ECM ground terminals when measuring input/output voltage. Doing so may result in damage to the ECM's transistor. Use a ground other than ECM terminals, such as the ground.

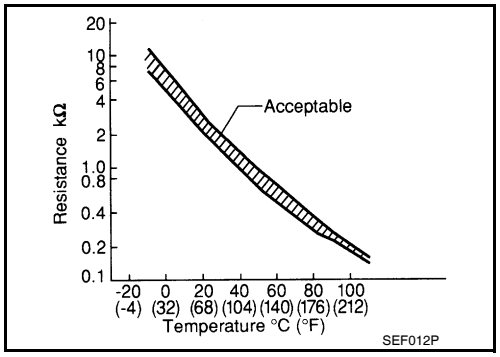

On Board Diagnosis Logic

INFOID:0000000001351447

DTC No.	Trouble diagnosis name	DTC detecting condition	Possible cause
P0127 0127	Intake air temperature too high	Rationally incorrect voltage from the sensor is sent to ECM, compared with the voltage signal from engine coolant temperature sensor.	• Harness or connectors (The sensor circuit is open or shorted) • Intake air temperature sensor

DTC Confirmation Procedure

INFOID:0000000001351448

NOTE:
If DTC Confirmation Procedure has been previously conducted, always turn ignition switch OFF and wait at least 10 seconds before conducting the next test.

CAUTION:
Always drive vehicle at a safe speed.
TESTING CONDITION:
This test may be conducted with the drive wheels lifted in the shop or by driving the vehicle. If a road test is expected to be easier, it is unnecessary to lift the vehicle.

WITH CONSULT-III

1. Wait until engine coolant temperature is less than 90°C (194°F)
a. Turn ignition switch ON.
b. Select “DATA MONITOR” mode with CONSULT-III.
c. Check the engine coolant temperature.
d. If the engine coolant temperature is not less than 90°C (194°F), turn ignition switch OFF and cool down engine.
   • Perform the following steps before engine coolant temperature is above 90°C (194°F).
2. Turn ignition switch ON.

3. Select “DATA MONITOR” mode with CONSULT-III.
4. Start engine.
5. Hold vehicle speed at more than 70 km/h (43 MPH) for 100 consecutive seconds.
6. Check 1st trip DTC.
7. If 1st trip DTC is detected, go to EC-136, "Diagnosis Procedure" .

WITH GST
Follow the procedure “WITH CONSULT-III” above.

Diagnosis Procedure

INFOID:0000000001351449

1. CHECK GROUND CONNECTIONS

1. Turn ignition switch OFF.
2. Loosen and retighten three ground screws on the body.
   Refer to EC-86, "Ground Inspection" .

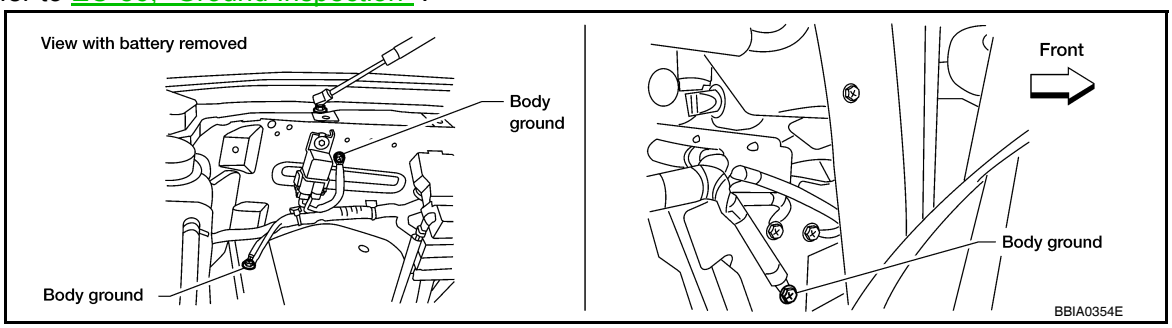

OK or NG

OK >> GO TO 2.
NG >> Repair or replace ground connections.

2. CHECK INTAKE AIR TEMPERATURE SENSOR

Refer to EC-136, "Component Inspection" .

OK or NG

OK >> GO TO 3.
NG >> Replace mass air flow sensor (with intake air temperature sensor).

3. CHECK INTERMITTENT INCIDENT

Refer to GI-35, "How to Check Terminal" and GI-38, "Intermittent Incident".
Refer to EC-439, "Wiring Diagram - ENGINE CONTROL SYSTEM -" .

>> **INSPECTION END**

Component Inspection

INFOID:0000000001351450

INTAKE AIR TEMPERATURE SENSOR

1. Check resistance between intake air temperature sensor terminals 5 and 6 under the following conditions.

Intake air temperature °C (°F)	Resistance kΩ
25 (77)	1.800 - 2.200

2. If NG, replace mass air flow sensor (with intake air temperature sensor).

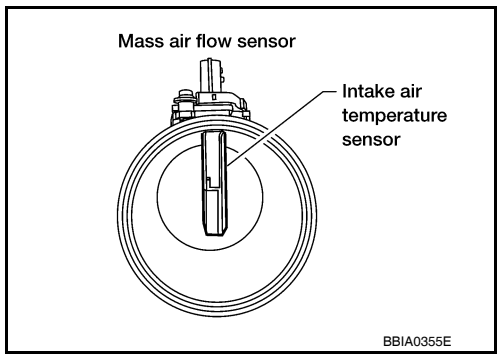

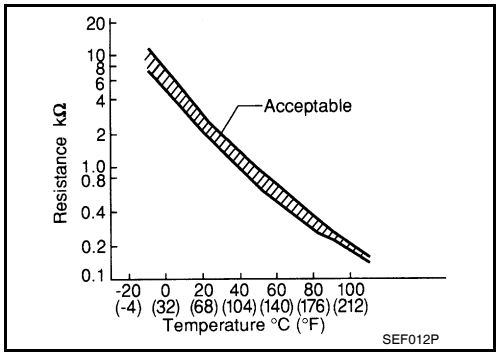
Resistance kΩ
20
10
8
6
4
2
1.0
0.8
0.4
0.2
0.1
Acceptable
-20 0 20 40 60 80 100
(-4) (32) (68) (104) (140) (176) (212)
Temperature °C (°F)
SEF012P

P0128 THERMOSTAT FUNCTION

On Board Diagnosis Logic

INFOID:0000000001449652

NOTE:
If DTC P0128 is displayed with DTC P0300, P0301, P0302, P0303, P0304, P0305, P0306, P0307 or P0308, first perform the trouble diagnosis for DTC P0300, P0301, P0302, P0303, P0304, P0305, P0306, P0307, P0308. Refer to EC-198, "DTC Confirmation Procedure".
Engine coolant temperature has not risen enough to open the thermostat even though the engine has run long enough.
This is due to a leak in the seal or the thermostat stuck open.

DTC No.	Trouble diagnosis name	DTC detecting condition	Possible cause
P0128 0128	Thermostat function	The engine coolant temperature does not reach to specified temperature even though the engine has run long enough.	• Thermostat • Leakage from sealing portion of thermostat • Engine coolant temperature sensor

DTC Confirmation Procedure

INFOID:0000000001449653

NOTE:
Check vehicle specifications and VIN, then select the procedure to be performed. (Refer to the table below.)

Vehicle specification	Vehicle serial number	Procedure
2WD with ASCD	Up to 327618	A
	Between 327619 and 912536	B
	From 912537	C
2WD with ICC	Up to 327618	A
	Between 327619 and 914347	B
	From 914348	C
4WD with ASCD	Up to 327618	A
	Between 327619 and 913067	B
	From 913068	C
4WD with ICC	Up to 327618	A
	Between 327619 and 912422	B
	From 912423	C

PROCEDURE A

With CONSULT-III
NOTE:
If DTC Confirmation Procedure has been previously conducted, always turn ignition switch OFF and wait at least 10 seconds before conducting the next test.
TESTING CONDITION:
- **For best results, perform at ambient temperature of –10°C (14°F) or higher.**
- **For best results, perform at engine coolant temperature of –10°C (14°F) to 71°C (160°F).**
- **Before performing the following procedure, do not fill with the fuel.**

1. Turn A/C switch OFF.
2. Turn blower fan switch OFF.
3. Turn ignition switch ON.
4. Select “COOLAN TEMP/S” in “DATA MONITOR” mode with CONSULT-III.
5. Check the indication of “COOLAN TEMP/S”.
   If it is below 71°C (160°F), go to following step.
   If it is above 71°C (160°F), cool down the engine to less than 71°C (160°F). Then go to next steps.
6. Start engine and wait at idle for at least 30 minutes.

If "COOLAN TEMP/S" increases to more than 71°C (160°F) within 30 minutes, turn ignition switch OFF because the test result will be OK.

7. Check 1st trip DTC.
8. If 1st trip DTC is detected, go to EC-140, "Diagnosis Procedure".

With GST

Follow the procedure "With CONSULT-III" above.

PROCEDURE B

With CONSULT-III

NOTE:

If DTC Confirmation Procedure has been previously conducted, always turn ignition switch OFF and wait at least 10 seconds before conducting the next test.

TESTING CONDITION:

- **For best results, perform at ambient temperature of –10°C (14°F) or higher.**
- **For best results, perform at engine coolant temperature of –10°C (14°F) to 52°C (126°F).**
- **Before performing the following procedure, do not fill with the fuel.**

1. Turn A/C switch OFF.
2. Turn blower fan switch OFF.
3. Turn ignition switch ON.
4. Select "COOLAN TEMP/S" in "DATA MONITOR" mode with CONSULT-III.
5. Check the indication of "COOLAN TEMP/S".
   If it is below 52°C (126°F), go to following step.
   If it is above 52°C (126°F), cool down the engine to less than 52°C (126°F). Then go to next steps.
6. Start engine and wait at idle for at least 30 minutes.
   If "COOLAN TEMP/S" increases to more than 71°C (160°F) within 30 minutes, turn ignition switch OFF because the test result will be OK.
7. Check 1st trip DTC.
8. If 1st trip DTC is detected, go to EC-140, "Diagnosis Procedure".

With GST

Follow the procedure "With CONSULT-III" above.

PROCEDURE C

With CONSULT-III

NOTE:

If DTC Confirmation Procedure has been previously conducted, always turn ignition switch OFF and wait at least 10 seconds before conducting the next test.

TESTING CONDITION:

- **For best results, perform at ambient temperature of –10°C (14°F) or higher.**
- **For best results, perform at engine coolant temperature of –10°C (14°F) to 56°C (133°F).**
- **Before performing the following procedure, do not fill with the fuel.**

1. Turn A/C switch OFF.
2. Turn blower fan switch OFF.
3. Turn ignition switch ON.
4. Select "COOLAN TEMP/S" in "DATA MONITOR" mode with CONSULT-III.
5. Check the indication of "COOLAN TEMP/S".
   If it is below 56°C (133°F), go to following step.
   If it is above 56°C (133°F), cool down the engine to less than 56°C (133°F). Then go to next steps.
6. Start engine and wait at idle for at least 30 minutes.
   If "COOLAN TEMP/S" increases to more than 75°C (167°F) within 30 minutes, turn ignition switch OFF because the test result will be OK.
7. Check 1st trip DTC.
8. If 1st trip DTC is detected, go to EC-140, "Diagnosis Procedure".

With GST
Follow the procedure “With CONSULT-III” above.

Diagnosis Procedure

INFOID:0000000001449654

1. CHECK ENGINE COOLANT TEMPERATURE SENSOR

Refer to EC-140, "Component Inspection".

OK or NG

OK >> GO TO 2.
NG >> Replace engine coolant temperature sensor.

2. CHECK THERMOSTAT

Refer to CO-22, "Removal and Installation".

OK or NG

OK >> **INSPECTION END**
NG >> Replace thermostat.

Component Inspection

INFOID:0000000001449655

ENGINE COOLANT TEMPERATURE SENSOR

1. Check resistance between engine coolant temperature sensor terminals 1 and 2 as shown in the figure.

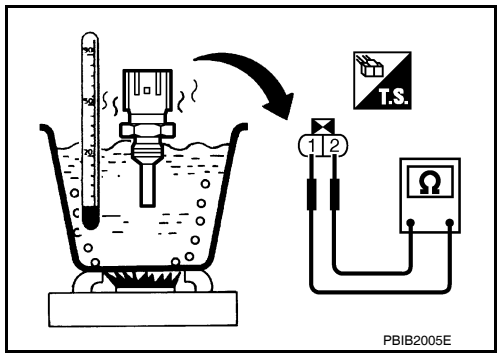

<Reference data>

Engine coolant temperature °C (°F)	Resistance kΩ
20 (68)	2.1 - 2.9
50 (122)	0.68 - 1.00
90 (194)	0.236 - 0.260

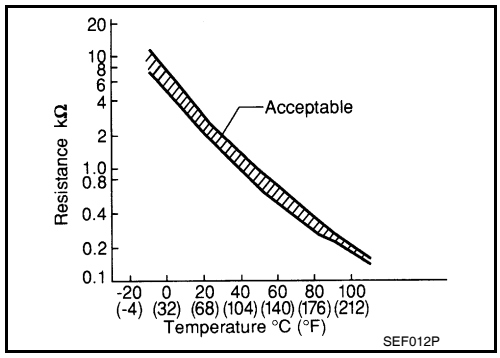

2. If NG, replace engine coolant temperature sensor.

P0130, P0150 A/F SENSOR 1

Component Description

INFOID:0000000001351457

The air fuel ratio (A/F) sensor 1 is a planar one-cell limit current sensor. The sensor element of the A/F sensor 1 is composed an electrode layer, which transports ions. It has a heater in the element.
The sensor is capable of precise measurement λ = 1, but also in the lean and rich range. Together with its control electronics, the sensor outputs a clear, continuous signal throughout a wide λ range.
The exhaust gas components diffuse through the diffusion layer at the sensor cell. An electrode layer is applied voltage, and this current relative oxygen density in lean. Also this current relative hydrocarbon density in rich.
Therefore, the A/F sensor 1 is able to indicate air fuel ratio by this electrode layer of current. In addition, a heater is integrated in the sensor to ensure the required operating temperature of about 800°C (1,472°F).

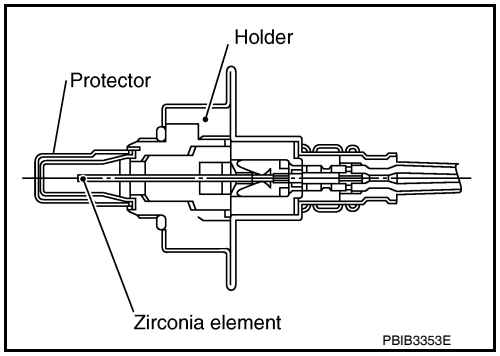

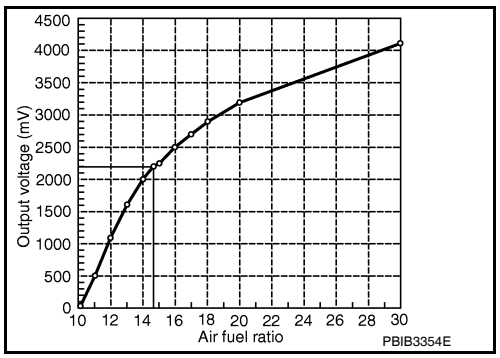

On Board Diagnosis Logic

INFOID:0000000001351459

To judge the malfunction, the diagnosis checks that the A/F signal computed by ECM from the A/F sensor 1 signal fluctuates according to fuel feedback control.

DTC No.	Trouble diagnosis name	DTC detecting condition		Possible Cause
P0130 0130 (Bank 1)	Air fuel ratio (A/F) sensor 1 circuit	A)	The A/F signal computed by ECM from the A/F sensor 1 signal is constantly in the range other than approx. 2.2V.	• Harness or connectors (The A/F sensor 1 circuit is open or shorted.) • Air fuel ratio (A/F) sensor 1
P0150 0150 (Bank 2)		B)	The A/F signal computed by ECM from the A/F sensor 1 signal is constantly approx. 2.2V.	

DTC Confirmation Procedure

INFOID:0000000001351460

Perform PROCEDURE FOR MALFUNCTION A first.
If the DTC cannot be confirmed, perform PROCEDURE FOR MALFUNCTION B.
NOTE:
If DTC Confirmation Procedure has been previously conducted, always turn ignition switch OFF and wait at least 10 seconds before conducting the next test.
TESTING CONDITION:
Before performing the following procedure, confirm that battery voltage is more than 11V at idle.

PROCEDURE FOR MALFUNCTION A

With CONSULT-III
1. Start engine and warm it up to normal operating temperature.
2. Let engine idle for 2 minutes.
3. Check 1st trip DTC.
4. If 1st trip DTC is detected, go to EC-142, "Diagnosis Procedure".

With GST
Follow the procedure “With CONSULT-III” above.

PROCEDURE FOR MALFUNCTION B

CAUTION:
Always drive vehicle at a safe speed.

With CONSULT-III

1. Start engine and warm it up to normal operating temperature.
2. Select “A/F SEN1 (B1)” or “A/F SEN1 (B2)” in “DATA MONITOR” mode with CONSULT-III.
3. Check “A/F SEN1 (B1)” or “A/F SEN1 (B2)” indication.
   If the indication is constantly approx. 2.2V and does not fluctuates, go to EC-142, "Diagnosis Procedure".
   If the indication fluctuates around 2.2V, go to next step.
4. Select “A/F SEN1 (B1) P1276” (for DTC P0130) or “A/F SEN1 (B2) P1286” (for DTC P0150) of “A/F SEN1” in “DTC WORK SUPPORT” mode with CONSULT-III.
5. Touch “START”.
6. When the following conditions are met, “TESTING” will be displayed on the CONSULT-III screen.

ENG SPEED	850 - 3,200 rpm
VHCL SPEED SE	More than 64 km/h (40 MPH)
B/FUEL SCHDL	1.0 - 8.0 msec
Shift lever	D position

   If “TESTING” is not displayed after 20 seconds, retry from step 2.

7. Release accelerator pedal fully.
   NOTE:
   Never apply brake during releasing the accelerator pedal.

8. Make sure that “TESTING” changes to “COMPLETED”.
   If “TESTING” changed to “OUT OF CONDITION”, retry from step 6.
9. Make sure that “OK” is displayed after touching “SELF-DIAG RESULT”.
   If “NG” is displayed, go to EC-142, "Diagnosis Procedure".

Overall Function Check

INFOID:0000000001351461

PROCEDURE FOR MALFUNCTION B

Use this procedure to check the overall function of the A/F sensor 1 circuit. During this check, a 1st trip DTC might not be confirmed.

With GST

1. Start engine and warm it up to normal operating temperature.
2. Drive the vehicle at a speed of 80 km/h (50 MPH) for a few minutes in the suitable gear position.
3. Set shift lever to D position, then release the accelerator pedal fully until the vehicle speed decreases to 50 km/h (30 MPH).
   NOTE:
   Never apply brake during releasing the accelerator pedal.
4. Repeat steps 2 and 3 for five times.
5. Stop the vehicle and turn ignition switch OFF.
6. Wait at least 10 seconds and restart engine.
7. Repeat steps 2 and 3 for five times.
8. Stop the vehicle and connect GST to the vehicle.
9. Make sure that no 1st trip DTC is displayed.
   If the 1st trip DTC is displayed, go to EC-142, "Diagnosis Procedure".

Diagnosis Procedure

INFOID:0000000001351463

1. CHECK GROUND CONNECTIONS

1. Turn ignition switch OFF.
2. Loosen and retighten three ground screws on the body.

Refer to EC-86, "Ground Inspection".

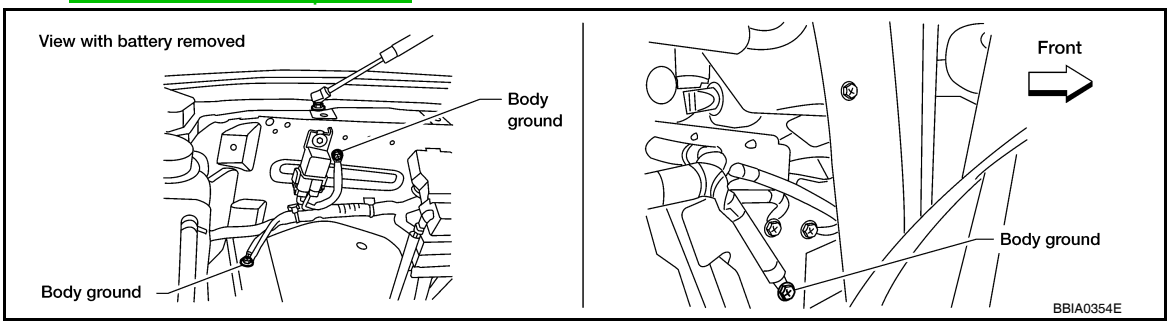

OK or NG

OK >> GO TO 2.
NG >> Repair or replace ground connections.

2. CHECK AIR FUEL RATIO (A/F) SENSOR 1 POWER SUPPLY CIRCUIT

1. Disconnect A/F sensor 1 harness connector.

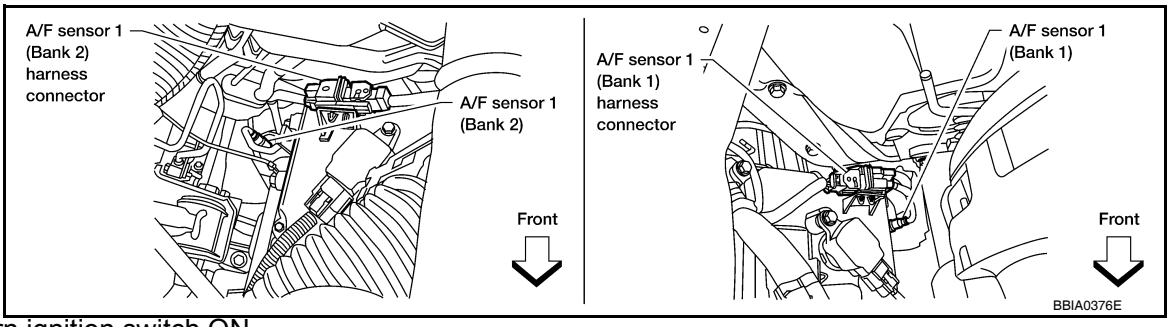

2. Turn ignition switch ON.
3. Check voltage between A/F sensor 1 terminal 4 and ground with CONSULT-III or tester.

Voltage: Battery voltage

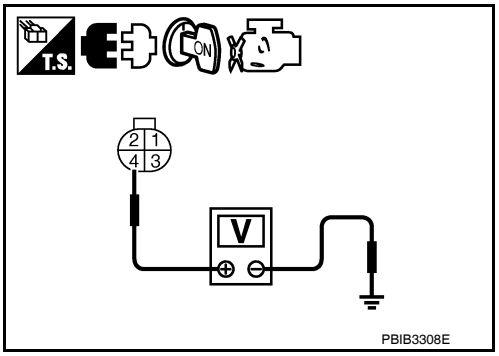

OK or NG

OK >> GO TO 4.
NG >> GO TO 3.

3. DETECT MALFUNCTIONING PART

Check the following.
- Harness connectors E5, F14
- IPDM E/R harness connector E119
- 15A fuse
- Harness for open or short between A/F sensor 1 and fuse

>> Repair or replace harness or connectors.

4. CHECK A/F SENSOR 1 INPUT SIGNAL CIRCUIT FOR OPEN AND SHORT

1. Turn ignition switch OFF.
2. Disconnect ECM harness connector.
3. Check harness continuity between the following terminals. Refer to Wiring Diagram.

	A/F sensor 1 terminal	ECM terminal
Bank1	1	35
	2	56

Bank 2	1	16
	2	75

Continuity should exist.

4. Check harness continuity between the following terminals and ground.
Refer to Wiring Diagram.

Bank 1		Bank 2	
A/F sensor 1 terminal	ECM terminal	A/F sensor 1 terminal	ECM terminal
1	35	1	16
2	56	2	75

Continuity should not exist.

5. Also check harness for short to power.

OK or NG

OK >> GO TO 5.
NG >> Repair open circuit or short to ground or short to power in harness or connectors.

5. CHECK INTERMITTENT INCIDENT

Refer to GI-35, "How to Check Terminal" and GI-38, "Intermittent Incident".

OK or NG

OK >> GO TO 6.
NG >> Repair or replace.

6. REPLACE AIR FUEL RATIO (A/F) SENSOR 1

Replace malfunctioning air fuel ratio (A/F) sensor 1.

CAUTION:

- **Discard any A/F sensor which has been dropped from a height of more than 0.5 m (19.7 in) onto a hard surface such as a concrete floor; use a new one.**
- **Before installing new A/F sensor, clean exhaust system threads using Oxygen Sensor Thread Cleaner tool J-43897-18 or J-43897-12 and approved anti-seize lubricant.**

>> **INSPECTION END**

P0131, P0151 A/F SENSOR 1

Component Description

INFOID:0000000001351465

The air fuel ratio (A/F) sensor 1 is a planar one-cell limit current sensor. The sensor element of the A/F sensor 1 is composed an electrode layer, which transports ions. It has a heater in the element.
The sensor is capable of precise measurement λ = 1, but also in the lean and rich range. Together with its control electronics, the sensor outputs a clear, continuous signal throughout a wide λ range.
The exhaust gas components diffuse through the diffusion layer at the sensor cell. An electrode layer is applied voltage, and this current relative oxygen density in lean. Also this current relative hydrocarbon density in rich.
Therefore, the A/F sensor 1 is able to indicate air fuel ratio by this electrode layer of current. In addition, a heater is integrated in the sensor to ensure the required operating temperature of about 800°C (1,472°F).

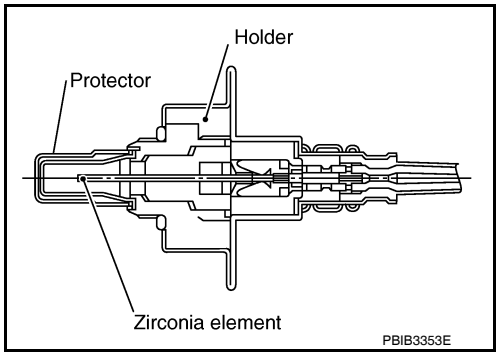

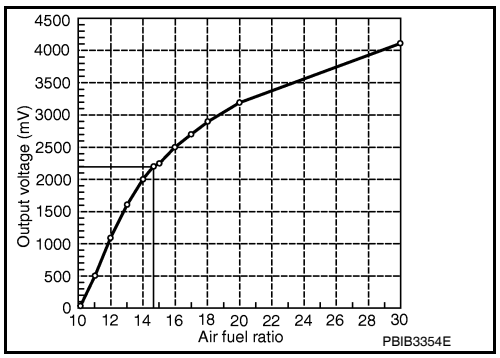

On Board Diagnosis Logic

INFOID:0000000001351467

To judge the malfunction, the diagnosis checks that the A/F signal computed by ECM from the A/F sensor 1 signal is not inordinately low.

DTC No.	Trouble diagnosis name	DTC detecting condition	Possible Cause
P0131 0131 (Bank 1)	Air fuel ratio (A/F) sensor 1 circuit low voltage	• The A/F signal computed by ECM from the A/F sensor 1 signal is constantly approx. 0V.	• Harness or connectors (The A/F sensor 1 circuit is open or shorted.) • Air fuel ratio (A/F) sensor 1
P0151 0151 (Bank 2)			

DTC Confirmation Procedure

INFOID:0000000001351468

NOTE:
If DTC Confirmation Procedure has been previously conducted, always turn ignition switch OFF and wait at least 10 seconds before conducting the next test.
TESTING CONDITION:
Before performing the following procedure, confirm that battery voltage is more than 10.5V at idle.

WITH CONSULT-III

1. Start engine and warm it up to normal operating temperature.
2. Select “A/F SEN1 (B1)” or “A/F SEN1 (B2)” in “DATA MONITOR” mode with CONSULT-III.
3. Check “A/F SEN1 (B1)” or “A/F SEN1 (B2)” indication.
   If the indication is constantly approx. 0V, go to EC-146, "Diagnosis Procedure".
   If the indication is not constantly approx. 0V, go to next step.
4. Turn ignition switch OFF, wait at least 10 seconds and then restart engine.
5. Drive and accelerate vehicle to more than 40 km/h (25 MPH) within 20 seconds after restarting engine.
6. Maintain the following conditions for about 20 consecutive seconds.

ENG SPEED	1,000 - 3,200 rpm
VHCL SPEED SE	More than 40 km/h (25 MPH)
B/FUEL SCHDL	1.5 - 9.0 msec
Gear position	Suitable position

NOTE:
- **Keep the accelerator pedal as steady as possible during the cruising.**
- **If this procedure is not completed within 1 minute after restarting engine at step 4, return to step 4.**

7. Check 1st trip DTC.
8. If 1st trip DTC is displayed, go to EC-146, "Diagnosis Procedure".

WITH GST

Follow the procedure “WITH CONSULT-III” above.

Diagnosis Procedure

INFOID:0000000001351470

1. CHECK GROUND CONNECTIONS

1. Turn ignition switch OFF.
2. Loosen and retighten three ground screws on the body.
   Refer to EC-86, "Ground Inspection".

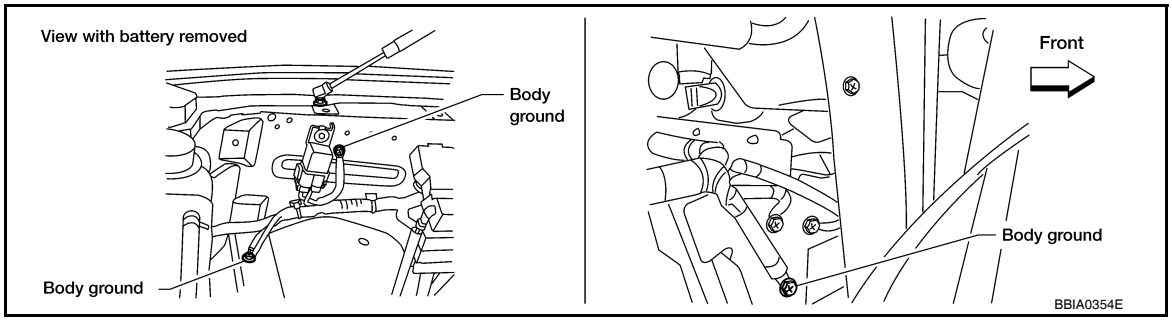

OK or NG

OK >> GO TO 2.
NG >> Repair or replace ground connections.

2. CHECK AIR FUEL RATIO (A/F) SENSOR 1 POWER SUPPLY CIRCUIT

1. Disconnect A/F sensor 1 harness connector.

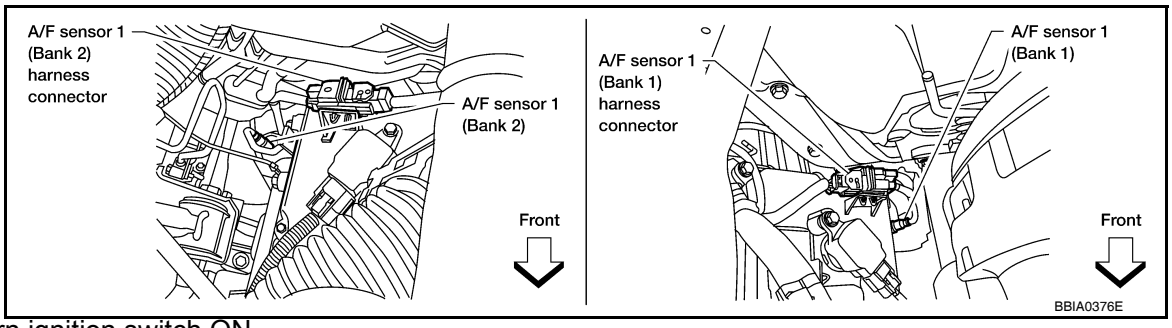

2. Turn ignition switch ON.

3. Check voltage between A/F sensor 1 terminal 4 and ground with CONSULT-III or tester.

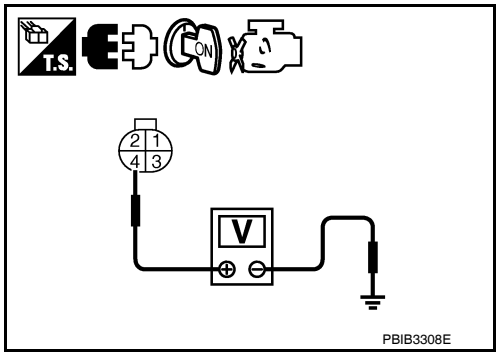

Voltage: Battery voltage

OK or NG

OK >> GO TO 4.
NG >> GO TO 3.

3. DETECT MALFUNCTIONING PART

Check the following.
- Harness connectors E5, F14
- IPDM E/R harness connector E119
- 15A fuse
- Harness for open or short between A/F sensor 1 and fuse

>> Repair or replace harness or connectors.

4. CHECK A/F SENSOR 1 INPUT SIGNAL CIRCUIT FOR OPEN AND SHORT

1. Turn ignition switch OFF.
2. Disconnect ECM harness connector.
3. Check harness continuity between A/F sensor 1 terminal and ECM terminal as follows. Refer to Wiring Diagram.

	A/F sensor 1 terminal	ECM terminal
Bank1	1	35
	2	56
Bank 2	1	16
	2	75

Continuity should exist.

4. Check harness continuity between the following terminals and ground. Refer to Wiring Diagram.

Bank 1		Bank 2	
A/F sensor 1 terminal	ECM terminal	A/F sensor 1 terminal	ECM terminal
1	35	1	16
2	56	2	75

Continuity should not exist.

5. Also check harness for short to power.

OK or NG

OK >> GO TO 5.
NG >> Repair open circuit or short to ground or short to power in harness or connectors.

5. CHECK INTERMITTENT INCIDENT

Refer to GI-35, "How to Check Terminal" and GI-38, "Intermittent Incident".

OK or NG

OK >> GO TO 6.
NG >> Repair or replace.

6. REPLACE AIR FUEL RATIO (A/F) SENSOR 1

Replace malfunctioning air fuel ratio (A/F) sensor 1.

CAUTION:

- **Discard any air fuel ratio (A/F) sensor which has been dropped from a height of more than 0.5 m (19.7 in) onto a hard surface such as a concrete floor; use a new one.**
- **Before installing new air fuel ratio (A/F) sensor, clean exhaust system threads (using Oxygen Sensor Thread Cleaner tool J-43897-18 or J-43897-12) and approved anti-seize lubricant.**

>> **INSPECTION END**

P0132, P0152 A/F SENSOR 1

Component Description

INFOID:0000000001351472

The air fuel ratio (A/F) sensor 1 is a planar one-cell limit current sensor. The sensor element of the A/F sensor 1 is composed an electrode layer, which transports ions. It has a heater in the element.
The sensor is capable of precise measurement λ = 1, but also in the lean and rich range. Together with its control electronics, the sensor outputs a clear, continuous signal throughout a wide λ range.
The exhaust gas components diffuse through the diffusion layer at the sensor cell. An electrode layer is applied voltage, and this current relative oxygen density in lean. Also this current relative hydrocarbon density in rich.
Therefore, the A/F sensor 1 is able to indicate air fuel ratio by this electrode layer of current. In addition, a heater is integrated in the sensor to ensure the required operating temperature of about 800°C (1,472°F).

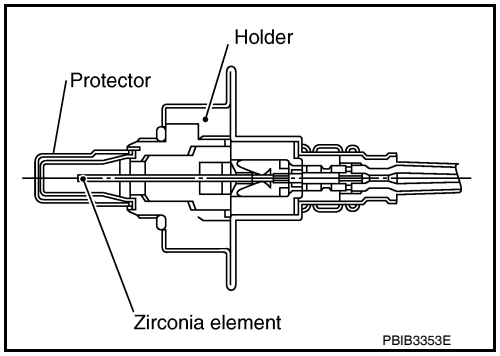

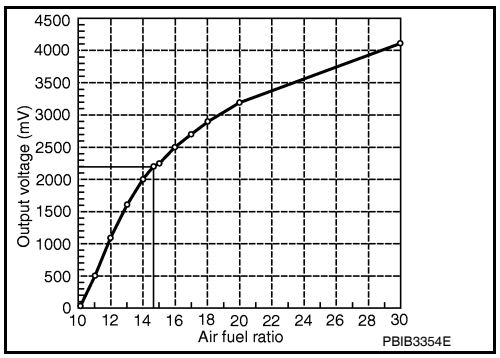

On Board Diagnosis Logic

INFOID:0000000001351474

To judge the malfunction, the diagnosis checks that the A/F signal computed by ECM from the A/F sensor 1 signal is not inordinately high.

DTC No.	Trouble diagnosis name	DTC detecting condition	Possible Cause
P0132 0132 (Bank 1)	Air fuel ratio (A/F) sensor 1 circuit high voltage	• The A/F signal computed by ECM from the A/F sensor 1 signal is constantly approx. 5V.	• Harness or connectors (The A/F sensor 1 circuit is open or shorted.) • Air fuel ratio (A/F) sensor 1
P0132 0132 (Bank 2)			

DTC Confirmation Procedure

INFOID:0000000001351475

NOTE:
If DTC Confirmation Procedure has been previously conducted, always turn ignition switch OFF and wait at least 10 seconds before conducting the next test.
TESTING CONDITION:
Before performing the following procedure, confirm that battery voltage is more than 10.5V at idle.

WITH CONSULT-III

1. Start engine and warm it up to normal operating temperature.
2. Select “A/F SEN1 (B1)” or “A/F SEN1 (B2)” in “DATA MONITOR” mode with CONSULT-III.
3. Check “A/F SEN1 (B1)” or “A/F SEN1 (B2)” indication.
   If the indication is constantly approx. 5V, go to EC-150, "Diagnosis Procedure".
   If the indication is not constantly approx. 5V, go to next step.
4. Turn ignition switch OFF, wait at least 10 seconds and then restart engine.
5. Drive and accelerate vehicle to more than 40 km/h (25 MPH) within 20 seconds after restarting engine.
6. Maintain the following conditions for about 20 consecutive seconds.

ENG SPEED	1,000 - 3,200 rpm
VHCL SPEED SE	More than 40 km/h (25 MPH)
B/FUEL SCHDL	1.5 - 9.0 msec
Gear position	Suitable position

NOTE:
- **Keep the accelerator pedal as steady as possible during the cruising.**
- **If this procedure is not completed within 1 minute after restarting engine at step 4, return to step 4.**

7. Check 1st trip DTC.
8. If 1st trip DTC is displayed, go to EC-150, "Diagnosis Procedure".

WITH GST

Follow the procedure “WITH CONSULT-III” above.

Diagnosis Procedure

INFOID:0000000001351477

1. CHECK GROUND CONNECTIONS

1. Turn ignition switch OFF.
2. Loosen and retighten three ground screws on the body.
   Refer to EC-86, "Ground Inspection".

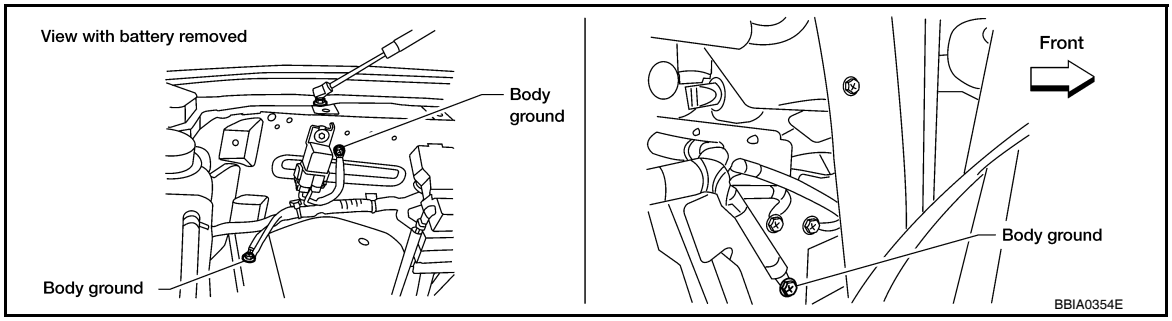

OK or NG

OK >> GO TO 2.
NG >> Repair or replace ground connections.

2. CHECK AIR FUEL RATIO (A/F) SENSOR 1 POWER SUPPLY CIRCUIT

1. Disconnect A/F sensor 1 harness connector.

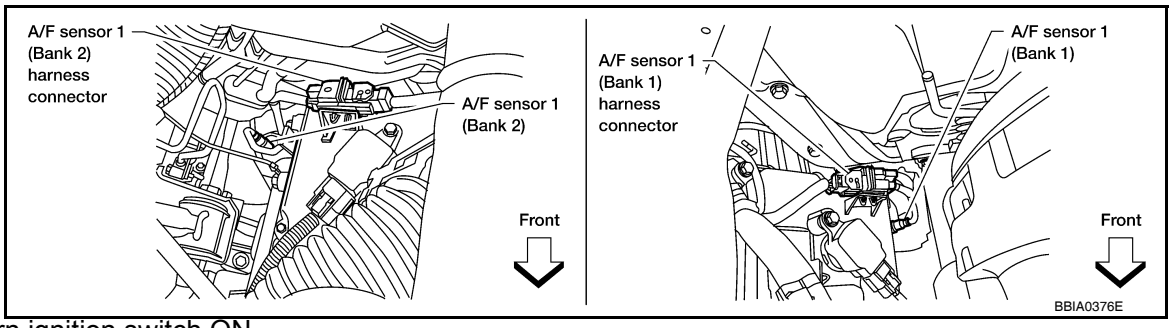

2. Turn ignition switch ON.

3. Check voltage between A/F sensor 1 terminal 4 and ground with CONSULT-III or tester.

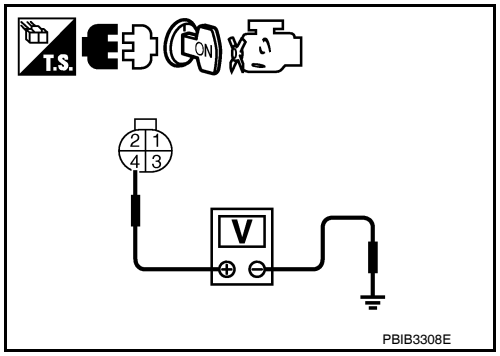

Voltage: Battery voltage

OK or NG

OK >> GO TO 4.
NG >> GO TO 3.

3. DETECT MALFUNCTIONING PART

Check the following.
- Harness connectors E5, F14
- IPDM E/R harness connector E119
- 15A fuse
- Harness for open or short between A/F sensor 1 and fuse

>> Repair or replace harness or connectors.

4. CHECK A/F SENSOR 1 INPUT SIGNAL CIRCUIT FOR OPEN AND SHORT

1. Turn ignition switch OFF.
2. Disconnect ECM harness connector.
3. Check harness continuity between A/F sensor 1 terminal and ECM terminal as follows. Refer to Wiring Diagram.

	A/F sensor 1 terminal	ECM terminal
Bank1	1	35
	2	56
Bank 2	1	16
	2	75

Continuity should exist.

4. Check harness continuity between the following terminals and ground. Refer to Wiring Diagram.

Bank 1		Bank 2	
A/F sensor 1 terminal	ECM terminal	A/F sensor 1 terminal	ECM terminal
1	35	1	16
2	56	2	75

Continuity should not exist.

5. Also check harness for short to power.

OK or NG

OK >> GO TO 5.
NG >> Repair open circuit or short to ground or short to power in harness or connectors.

5. CHECK INTERMITTENT INCIDENT

Refer to GI-35, "How to Check Terminal" and GI-38, "Intermittent Incident".

OK or NG

OK >> GO TO 6.
NG >> Repair or replace.

6. REPLACE AIR FUEL RATIO (A/F) SENSOR 1

Replace malfunctioning air fuel ratio (A/F) sensor 1.

CAUTION:

- **Discard any air fuel ratio (A/F) sensor which has been dropped from a height of more than 0.5 m (19.7 in) onto a hard surface such as a concrete floor; use a new one.**
- **Before installing new air fuel ratio (A/F) sensor, clean exhaust system threads (using Oxygen Sensor Thread Cleaner tool J-43897-18 or J-43897-12) and approved anti-seize lubricant.**

>> **INSPECTION END**

P0133, P0153 A/F SENSOR 1

Component Description

INFOID:0000000001351479

The air fuel ratio (A/F) sensor 1 is a planar one-cell limit current sensor. The sensor element of the A/F sensor 1 is composed an electrode layer, which transports ions. It has a heater in the element.
The sensor is capable of precise measurement λ = 1, but also in the lean and rich range. Together with its control electronics, the sensor outputs a clear, continuous signal throughout a wide λ range.
The exhaust gas components diffuse through the diffusion layer at the sensor cell. An electrode layer is applied voltage, and this current relative oxygen density in lean. Also this current relative hydrocarbon density in rich.
Therefore, the A/F sensor 1 is able to indicate air fuel ratio by this electrode layer of current. In addition, a heater is integrated in the sensor to ensure the required operating temperature of about 800°C (1,472°F).

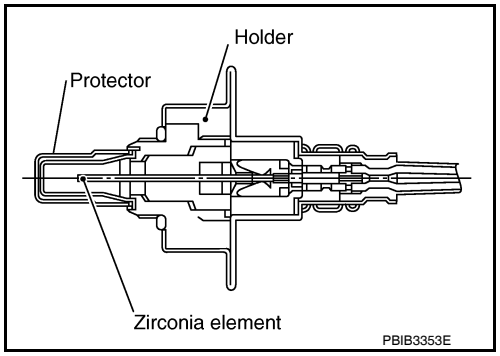

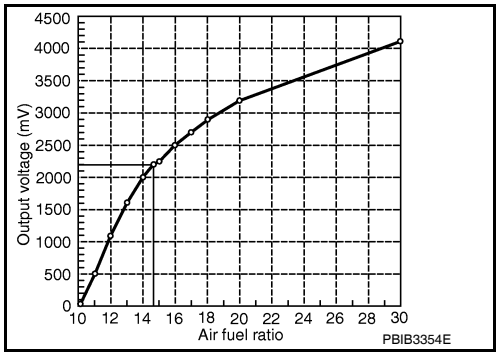

On Board Diagnosis Logic

INFOID:0000000001351481

To judge the malfunction of A/F sensor 1, this diagnosis measures response time of the A/F signal computed by ECM from the A/F sensor 1 signal. The time is compensated by engine operating (speed and load), fuel feedback control constant, and the A/F sensor 1 temperature index. Judgment is based on whether the compensated time (the A/F signal cycling time index) is inordinately long or not.

DTC No.	Trouble diagnosis name	DTC detecting condition	Possible Cause
P0133 0133 (Bank 1)	Air fuel ratio (A/F) sensor 1 circuit slow response	• The response of the A/F signal computed by ECM from A/F sensor 1 signal takes more than the specified time.	• Harness or connectors (The A/F sensor 1 circuit is open or shorted.) • A/F sensor 1 • A/F sensor 1 heater • Fuel pressure • Fuel injector • Intake air leaks • Exhaust gas leaks • PCV • Mass air flow sensor
P0153 0153 (Bank 2)			

DTC Confirmation Procedure

INFOID:0000000001351482

NOTE:
If DTC Confirmation Procedure has been previously conducted, always turn ignition switch OFF and wait at least 10 seconds before conducting the next test.
TESTING CONDITION:
Before performing the following procedure, confirm that battery voltage is more than 11V at idle.

WITH CONSULT-III

1. Start engine and warm it up to normal operating temperature.
2. Turn ignition switch OFF and wait at least 10 seconds.
3. Start engine and keep the engine speed between 3,500 and 4,000 rpm for at least 1minute under no load.

4. Let engine idle for 1 minute.
5. Select “A/F SEN1(B1) P1278/P1279” (for DTC P0133) or “A/F SEN1(B2) P1288/P1289” (for DTC P0153) of “A/F SEN1” in “DTC WORK SUPPORT” mode with CONSULT-III.
6. Touch “START”.
   If “COMPLETED” appears on CONSULT-III screen, go to step 10.
   If “COMPLETED” does not appear on CONSULT-III screen, go to the following step.
7. After perform the following procedure, “TESTING” will be displayed on the CONSULT-III screen.

a. Increase the engine speed up to 4,000 to 5,000 rpm and keep it for 10 seconds.
b. Fully release accelerator pedal and then let engine idle for about 10 seconds.
   If “TESTING” is not displayed after 10 seconds, refer to EC-75.

8. Wait for about 20 seconds at idle at under the condition that “TESTING” is displayed on the CONSULT-III screen.
9. Make sure that “TESTING” changes to “COMPLETED”.
   If “TESTING” changed to “OUT OF CONDITION”, refer to EC-75.
10. Make sure that “OK” is displayed after touching “SELF-DIAG RESULT”.
    If “NG” is displayed, go to EC-154, "Diagnosis Procedure".

WITH GST

1. Start engine and warm it up to normal operating temperature.
2. Select Service $01 with GST.
3. Calculate the total value of “Short term fuel trim” and “Long term fuel trim” indications.
   Make sure that the total percentage should be within ±15%.
   If OK, go to the following step.
   If NG, check the following.
   - Intake air leaks
   - Exhaust gas leaks
   - Incorrect fuel pressure
   - Lack of fuel
   - Fuel injector
   - Incorrect PCV hose connection
   - PCV valve
   - Mass air flow sensor
4. Turn ignition switch OFF and wait at least 10 seconds.
5. Start engine and keep the engine speed between 3,500 and 4,000 rpm for at least 1minute under no load.
6. Let engine idle for 1 minute.
7. Increase the engine speed up to 4,000 to 5,000 rpm and keep it for 10 seconds.
8. Fully release accelerator pedal and then let engine idle for about 1 minute.
9. Select Service $07 with GST.
   If the 1st trip DTC is displayed, go to EC-154, "Diagnosis Procedure".

Diagnosis Procedure

INFOID:0000000001351484

1. CHECK GROUND CONNECTIONS

1. Turn ignition switch OFF.
2. Loosen and retighten three ground screws on the body.

Refer to EC-86, "Ground Inspection".

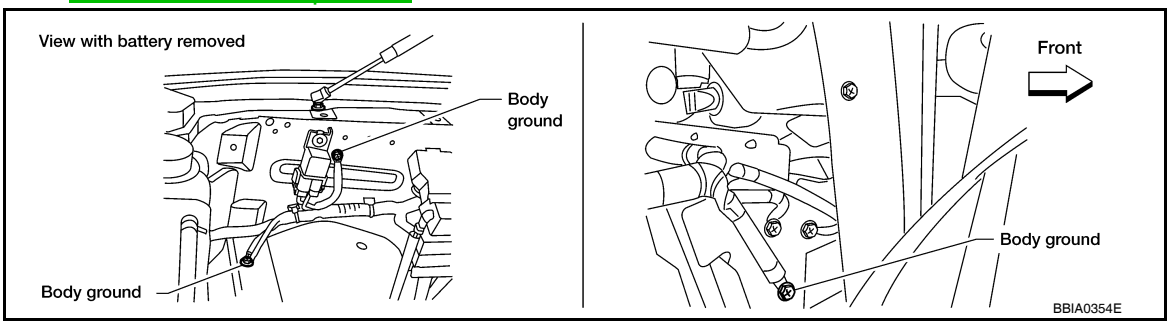

OK or NG

OK >> GO TO 2.
NG >> Repair or replace ground connections.

2. RETIGHTEN A/F SENSOR 1

Loosen and retighten the A/F sensor 1.

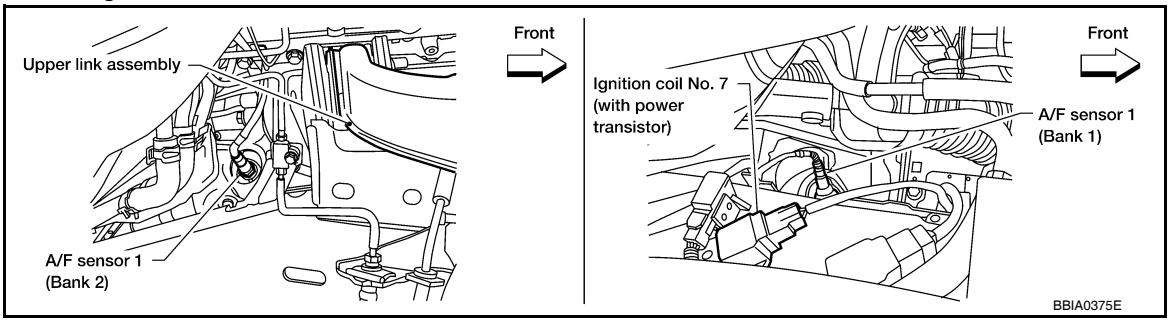

Tightening torque: 50 N-m (5.1 kg-m, 37 ft-lb)

>> GO TO 3.

3. CHECK EXHAUST GAS LEAK

1. Start engine and run it at idle.
2. Listen for an exhaust gas leak before three way catalyst (manifold).

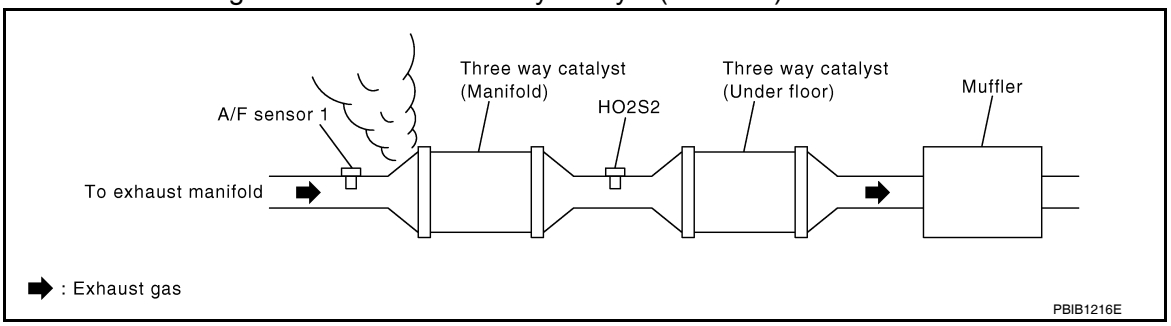

OK or NG

OK >> GO TO 4.
NG >> Repair or replace.

4. CHECK FOR INTAKE AIR LEAK

Listen for an intake air leak after the mass air flow sensor.

OK or NG

OK >> GO TO 5.
NG >> Repair or replace.

5. CLEAR THE SELF-LEARNING DATA

With CONSULT-III

1. Start engine and warm it up to normal operating temperature.

2. Select “SELF-LEARNING CONT” in “WORK SUPPORT” mode with CONSULT-III.
3. Clear the self-learning control coefficient by touching “CLEAR” or “START”.
4. Run engine for at least 10 minutes at idle speed.
   Is the 1st trip DTC P0171, P172, P0174 or P0175 detected? Is it difficult to start engine?

Without CONSULT-III

1. Start engine and warm it up to normal operating temperature.
2. Turn ignition switch OFF.
3. Disconnect mass air flow sensor harness connector.
4. Restart engine and let it idle for at least 5 seconds.
5. Stop engine and reconnect mass air flow sensor harness connector.
6. Make sure DTC P0102 is displayed.
7. Erase the DTC memory. Refer to EC-55, "Malfunction Indicator Lamp (MIL)".
8. Make sure DTC P0000 is displayed.
9. Run engine for at least 10 minutes at idle speed.
   Is the 1st trip DTC P0171, P0172, P0174 or P0175 detected? Is it difficult to start engine?

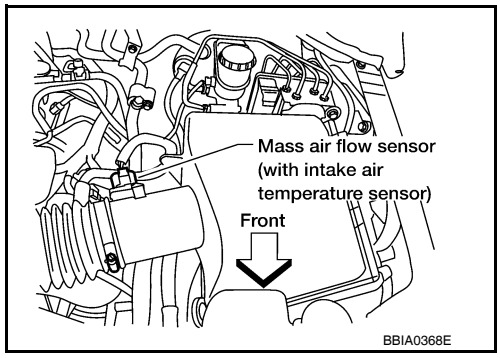

Yes or No

Yes >> Perform trouble diagnosis for DTC P0171, P0174 or P0172, P0175. Refer to EC-176 or EC-182.
No >> GO TO 6.

6. CHECK A/F SENSOR 1 POWER SUPPLY CIRCUIT

1. Turn ignition switch OFF.
2. Disconnect A/F sensor 1 harness connector.

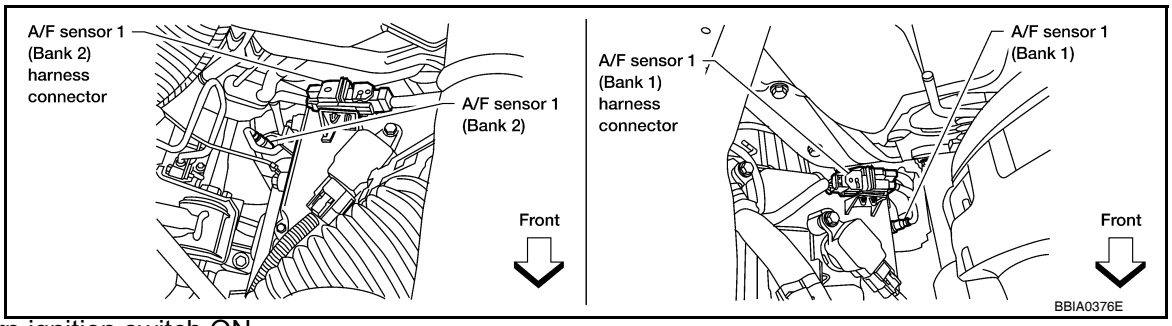

3. Turn ignition switch ON.
4. Check voltage between A/F sensor 1 terminal 4 and ground with CONSULT-III or tester.

Voltage: Battery voltage

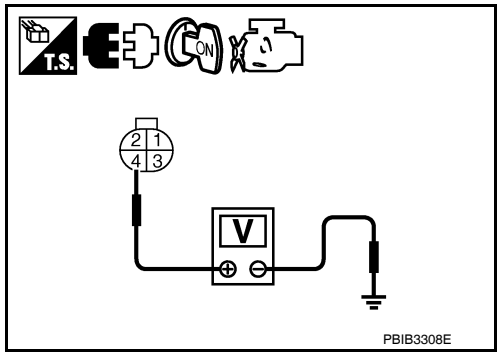

OK or NG

OK >> GO TO 8.
NG >> GO TO 7.

7. DETECT MALFUNCTIONING PART

Check the following.
- Harness connectors E5, F14
- IPDM E/R harness connector E119
- 15A fuse
- Harness for open or short between A/F sensor 1 and fuse

>> Repair or replace harness or connectors.

8. CHECK A/F SENSOR 1 INPUT SIGNAL CIRCUIT FOR OPEN AND SHORT

1. Turn ignition switch OFF.
2. Disconnect ECM harness connector.
3. Check harness continuity between A/F sensor 1 terminal and ECM terminal as follows. Refer to Wiring Diagram.

	A/F sensor 1 terminal	ECM terminal
Bank1	1	35
	2	56
Bank 2	1	16
	2	75

Continuity should exist.

4. Check harness continuity between the following terminals and ground. Refer to Wiring Diagram.

Bank 1		Bank 2	
A/F sensor 1 terminal	ECM terminal	A/F sensor 1 terminal	ECM terminal
1	35	1	16
2	56	2	75

Continuity should not exist.

5. Also check harness for short to power.

OK or NG

OK >> GO TO 9.
NG >> Repair open circuit or short to ground or short to power in harness or connectors.

9. CHECK AIR FUEL RATIO (A/F) SENSOR 1 HEATER

Refer to EC-99, "Component Inspection".

OK or NG

OK >> GO TO 10.
NG >> GO TO 13.

10. CHECK MASS AIR FLOW SENSOR

Refer to EC-111, "Component Inspection".

OK or NG

OK >> GO TO 11.
NG >> Replace mass air flow sensor.

11. CHECK PCV VALVE

Refer to EC-421, "Component Inspection".

OK or NG

OK >> GO TO 12.
NG >> Repair or replace PCV valve.

12. CHECK INTERMITTENT INCIDENT

Refer to GI-35, "How to Check Terminal" and GI-38, "Intermittent Incident".

OK or NG

OK >> GO TO 13.
NG >> Repair or replace.

13. REPLACE AIR FUEL RATIO (A/F) SENSOR 1

Replace malfunctioning air fuel ratio (A/F) sensor 1.

CAUTION:

- **Discard any air fuel ratio (A/F) sensor which has been dropped from a height of more than 0.5 m (19.7 in) onto a hard surface such as a concrete floor; use a new one.**
- **Before installing new air fuel ratio (A/F) sensor, clean exhaust system threads (using Oxygen Sensor Thread Cleaner tool J-43897-18 or J-43897-12) and approved anti-seize lubricant.**

>> **INSPECTION END**

P0137, P0157 HO2S2

Component Description

INFOID:0000000001351486

The heated oxygen sensor 2, after three way catalyst (manifold), monitors the oxygen level in the exhaust gas on each bank.
Even if switching characteristics of the air fuel ratio (A/F) sensor 1 are shifted, the air-fuel ratio is controlled to stoichiometric, by the signal from the heated oxygen sensor 2.
This sensor is made of ceramic zirconia. The zirconia generates voltage from approximately 1V in richer conditions to 0V in leaner conditions.
Under normal conditions the heated oxygen sensor 2 is not used for engine control operation.

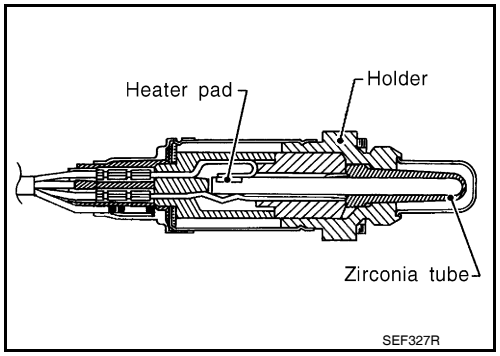

On Board Diagnosis Logic

INFOID:0000000001351488

The heated oxygen sensor 2 has a much longer switching time between rich and lean than the air fuel ratio (A/F) sensor 1. The oxygen storage capacity of the three way catalyst (manifold) causes the longer switching time. To judge the malfunctions of heated oxygen sensor 2, ECM monitors whether the maximum voltage of the sensor is sufficiently high during the various driving condition such as fuel-cut.

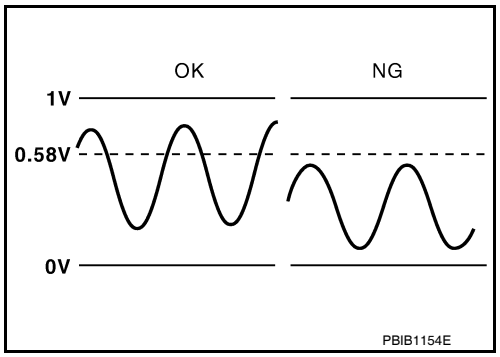

DTC No.	Trouble diagnosis name	DTC detecting condition	Possible cause
P0137 0137 (Bank 1)	Heated oxygen sensor 2 circuit low voltage	The maximum voltage from the sensor is not reached to the specified voltage.	• Harness or connectors (The sensor circuit is open or shorted) • Heated oxygen sensor 2 • Fuel pressure • Fuel injector • Intake air leaks
P0157 0157 (Bank 2)			

DTC Confirmation Procedure

INFOID:0000000001351489

NOTE:
If DTC confirmation Procedure has been previously conducted, always turn ignition switch OFF and wait at least 10 seconds before conducting the next test.

WITH CONSULT-III

TESTING CONDITION:
For better results, perform "DTC WORK SUPPORT" at a temperature of 0 to 30 °C (32 to 86 °F).

1. Turn ignition switch ON and select "DATA MONITOR" mode with CONSULT-III.
2. Start engine and warm it up to the normal operating temperature.
3. Turn ignition switch OFF and wait at least 10 seconds.
4. Start engine and keep the engine speed between 3,500 and 4,000 rpm for at least 1 minute under no load.
5. Let engine idle for 1 minute.
6. Make sure that "COOLAN TEMP/S" indicates more than 70°C (158°F).
   If not, warm up engine and go to next step when "COOLAN TEMP/S" indication reaches to 70°C (158°F).
7. Open engine hood.
8. Select "HO2S2 (B1) P1147" (for DTC P0137) or "HO2S2 (B2) P1167" (for DTC P0157) of "HO2S2" in "DTC WORK SUPPORT" mode with CONSULT-III.

9. Start engine and following the instruction of CONSULT-III.
   NOTE:
   It will take at most 10 minutes until “COMPLETED” is displayed.
10. Make sure that “OK” is displayed after touching “SELF-DIAG RESULTS”.
    If “NG” is displayed, refer to EC-160, "Diagnosis Procedure" .
    If “CAN NOT BE DIAGNOSED” is displayed, perform the following.

a. Turn ignition switch OFF and leave the vehicle in a cool place (soak the vehicle).
b. Return to step 1.

Overall Function Check

INFOID:0000000001351490

Use this procedure to check the overall function of the heated oxygen sensor 2 circuit. During this check, a 1st trip DTC might not be confirmed.

WITH GST

1. Start engine and warm it up to the normal operating temperature.
2. Turn ignition switch OFF and wait at least 10 seconds.
3. Start engine and keep the engine speed between 3,500 and 4,000 rpm for at least 1 minute under no load.
4. Let engine idle for 1 minute.
5. Set voltmeter probes between ECM terminal 55 [HO2S2 (B1) signal] or 74 [HO2S2 (B2) signal] and ground.
6. Check the voltage when revving up to 4,000 rpm under no load at least 10 times.
   (Depress and release accelerator pedal as soon as possible.)
   The voltage should be above 0.58V at least once during this procedure.
   If the voltage can be confirmed in step 6, step 7 is not necessary.
7. Keep vehicle at idling for 10 minutes, then check the voltage. Or check the voltage when coasting from 80 km/h (50 MPH) in D position.
   The voltage should be above 0.58V at least once during this procedure.
8. If NG, go to EC-160, "Diagnosis Procedure" .

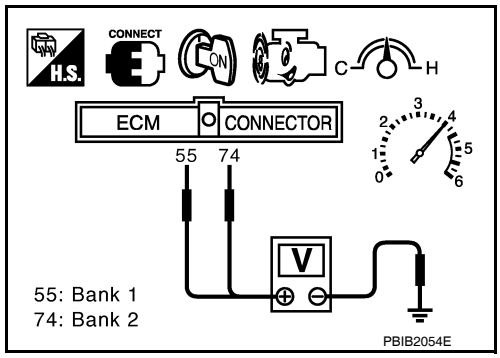

Diagnosis Procedure

INFOID:0000000001351492

1. CHECK GROUND CONNECTIONS

1. Turn ignition switch OFF.
2. Loosen and retighten three ground screws on the body.
   Refer to EC-86, "Ground Inspection" .

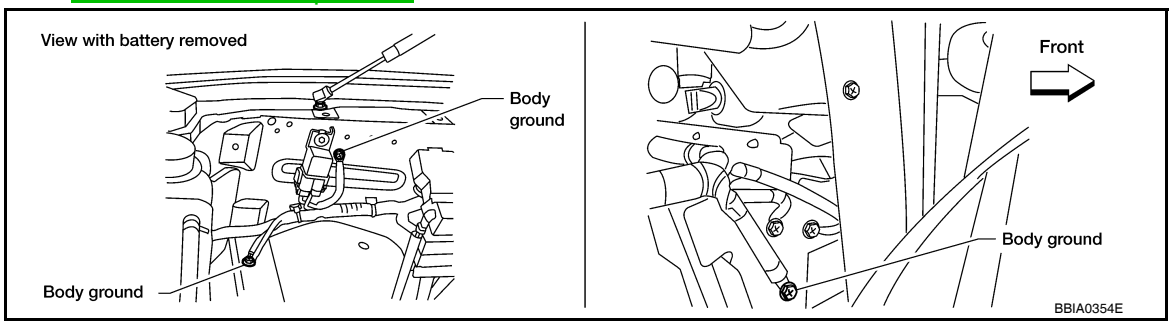

OK or NG

OK >> GO TO 2.
NG >> Repair or replace ground connections.

2. CLEAR THE SELF-LEARNING DATA

With CONSULT-III

1. Start engine and warm it up to normal operating temperature.

2. Select “SELF-LEARNING CONT” in “WORK SUPPORT” mode with CONSULT-III.
3. Clear the self-learning control coefficient by touching “CLEAR”.
4. Run engine for at least 10 minutes at idle speed.
   Is the 1st trip DTC P0171 or P0174 detected?
   Is it difficult to start engine?

Without CONSULT-III

1. Start engine and warm it up to normal operating temperature.
2. Turn ignition switch OFF.
3. Disconnect mass air flow sensor harness connector, and restart and run engine for at least 5 seconds at idle speed.
4. Stop engine and reconnect mass air flow sensor harness connector.
5. Make sure DTC P0102 is displayed.
6. Erase the DTC memory. Refer to EC-55, "Malfunction Indicator Lamp (MIL)".
7. Make sure DTC P0000 is displayed.
8. Run engine for at least 10 minutes at idle speed.
   Is the 1st trip DTC P0171 or P0174 detected?
   Is it difficult to start engine?

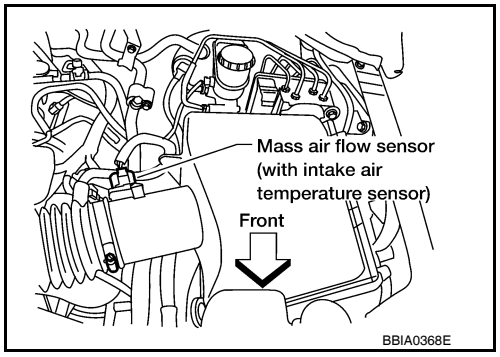

Yes or No

Yes >> Perform trouble diagnosis for DTC P0171 or P0174. Refer to EC-176 .
No >> GO TO 3.

3. CHECK HO2S2 GROUND CIRCUIT FOR OPEN AND SHORT

1. Turn ignition switch OFF.
2. Disconnect heated oxygen sensor 2 harness connector.

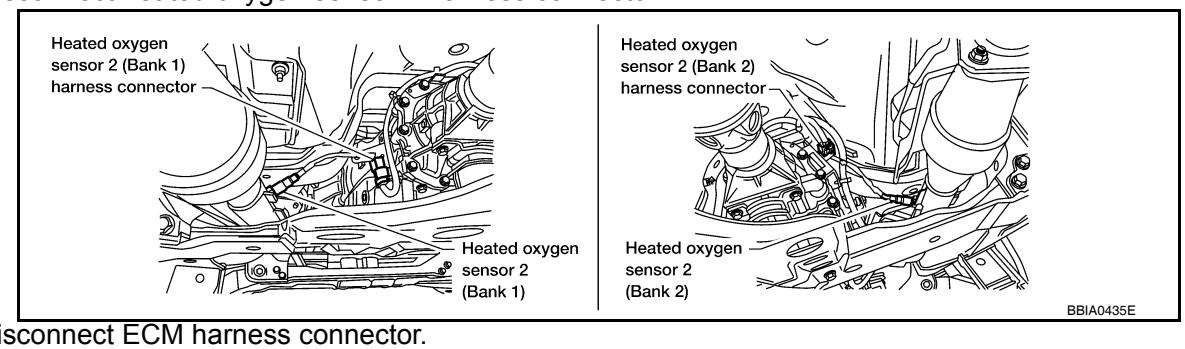

3. Disconnect ECM harness connector.
4. Check harness continuity between ECM terminal 78 and HO2S2 terminal 4.
   Refer to Wiring Diagram.

   Continuity should exist.

5. Also check harness for short to ground and short to power.

OK or NG

OK >> GO TO 4.
NG >> Repair open circuit or short to ground or short to power in harness or connectors.

4. CHECK HO2S2 INPUT SIGNAL CIRCUIT FOR OPEN AND SHORT

1. Check harness continuity between ECM terminal and HO2S2 terminal as follows.
   Refer to Wiring Diagram.

DTC	Terminals		Bank
	ECM	Sensor	
P0137	55	1	1
P0157	74	1	2

Continuity should exist.

2. Check harness continuity between the following terminals and ground.
Refer to Wiring Diagram.

DTC	Terminals		Bank
	ECM	Sensor	
P0137	55	1	1
P0157	74	1	2

Continuity should not exist.

3. Also check harness for short to power.

OK or NG

OK >> GO TO 5.
NG >> Repair open circuit or short to ground or short to power in harness or connectors.

5. CHECK HEATED OXYGEN SENSOR 2

Refer to EC-162, "Component Inspection" .

OK or NG

OK >> GO TO 6.
NG >> Replace malfunctioning heated oxygen sensor 2.

6. CHECK INTERMITTENT INCIDENT

Refer to GI-35, "How to Check Terminal" and GI-38, "Intermittent Incident".

>> **INSPECTION END**

Component Inspection

INFOID:0000000001351493

HEATED OXYGEN SENSOR 2

With CONSULT-III

1. Turn ignition switch ON and select “DATA MONITOR” mode with CONSULT-III.
2. Start engine and warm it up to the normal operating temperature.
3. Turn ignition switch OFF and wait at least 10 seconds.
4. Start engine and keep the engine speed between 3,500 and 4,000 rpm for at least 1 minute under no load.
5. Let engine idle for 1 minute.
6. Select “FUEL INJECTION” in “ACTIVE TEST” mode, and select “HO2S2 (B1)/(B2)” as the monitor item with CONSULT-III.
7. Check “HO2S2 (B1)/(B2)” at idle speed when adjusting “FUEL INJECTION” to ±25%.

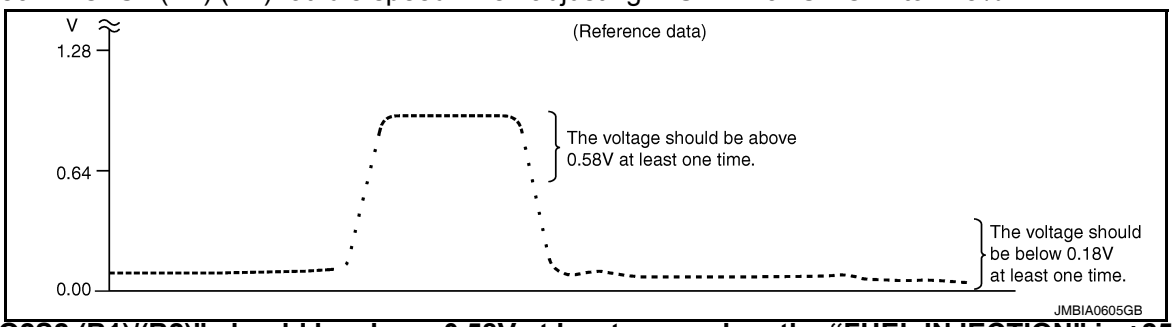

“HO2S2 (B1)/(B2)” should be above 0.58V at least once when the “FUEL INJECTION” is +25%.
“HO2S2 (B1)/(B2)” should be below 0.18V at least once when the “FUEL INJECTION” is –25%.

CAUTION:

- **Discard any heated oxygen sensor which has been dropped from a height of more than 0.5 m (19.7 in) onto a hard surface such as a concrete floor; use a new one.**

- **Before installing new oxygen sensor, clean exhaust system threads using Oxygen Sensor Thread Cleaner tool J-43897-18 or J-43897-12 and approved anti-seize lubricant.**

Without CONSULT-III

1. Start engine and warm it up to the normal operating temperature.
2. Turn ignition switch OFF and wait at least 10 seconds.
3. Start engine and keep the engine speed between 3,500 and 4,000 rpm for at least 1 minute under no load.
4. Let engine idle for 1 minute.
5. Set voltmeter probes between ECM terminal 55 [HO2S2 (B1) signal] or 74 [HO2S2 (B2) signal] and ground.
6. Check the voltage when revving up to 4,000 rpm under no load at least 10 times.
   (Depress and release accelerator pedal as soon as possible.)
   The voltage should be above 0.58V at least once during this procedure.
   If the voltage is above 0.58V at step 6, step 7 is not necessary.
7. Keep vehicle at idling for 10 minutes, then check voltage. Or check the voltage when coasting from 80 km/h (50 MPH) in D position.
   The voltage should be below 0.18V at least once during this procedure.
8. If NG, replace heated oxygen sensor 2.

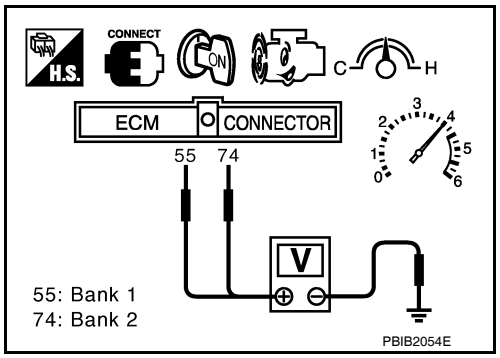

CAUTION:

- **Discard any heated oxygen sensor which has been dropped from a height of more than 0.5 m (19.7 in) onto a hard surface such as a concrete floor; use a new one.**
- **Before installing new oxygen sensor, clean exhaust system threads using Oxygen Sensor Thread Cleaner tool J-43897-18 or J-43897-12 and approved anti-seize lubricant.**

P0138, P0158 HO2S2

Component Description

INFOID:0000000001351495

The heated oxygen sensor 2, after three way catalyst (manifold), monitors the oxygen level in the exhaust gas on each bank.
Even if switching characteristics of the air fuel ratio (A/F) sensor 1 are shifted, the air-fuel ratio is controlled to stoichiometric, by the signal from the heated oxygen sensor 2.
This sensor is made of ceramic zirconia. The zirconia generates voltage from approximately 1V in richer conditions to 0V in leaner conditions.
Under normal conditions the heated oxygen sensor 2 is not used for engine control operation.

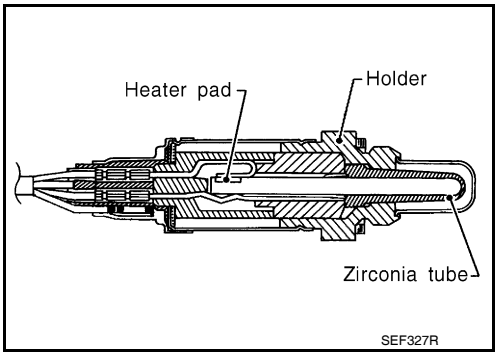

On Board Diagnosis Logic

INFOID:0000000001351497

The heated oxygen sensor 2 has a much longer switching time between rich and lean than the air fuel ratio (A/F) sensor 1. The oxygen storage capacity of the three way catalyst (manifold) causes the longer switching time.

MALFUNCTION A

To judge the malfunctions of heated oxygen sensor 2, ECM monitors whether the voltage is unusually high during the various driving condition such as fuel-cut.

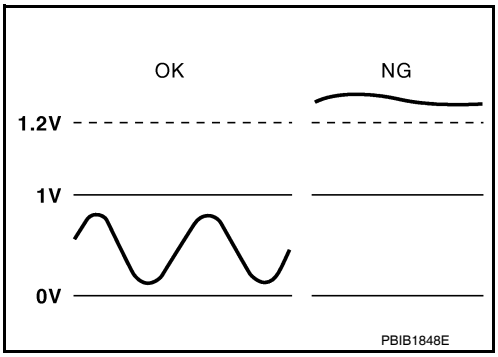

MALFUNCTION B

To judge the malfunctions of heated oxygen sensor 2, ECM monitors whether the minimum voltage of sensor is sufficiently low during the various driving condition such as fuel-cut.

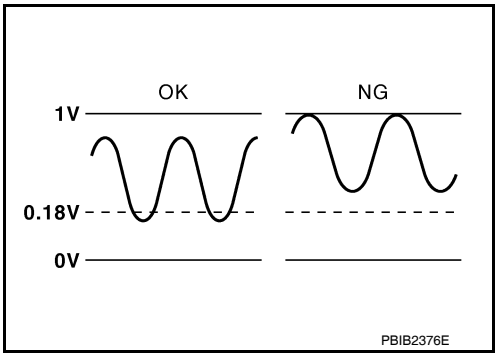

DTC No.	Trouble diagnosis name	DTC detecting condition		Possible cause
P0138 0138 (Bank 1)	Heated oxygen sensor 2 circuit high voltage	A)	An excessively high voltage from the sensor is sent to ECM.	• Harness or connectors (The sensor circuit is open or shorted) • Heated oxygen sensor 2
P0158 0158 (Bank 2)		B)	The minimum voltage from the sensor is not reached to the specified voltage.	• Harness or connectors (The sensor circuit is open or shorted) • Heated oxygen sensor 2 • Fuel pressure • Fuel injector

DTC Confirmation Procedure

INFOID:0000000001351498

Perform PROCEDURE FOR MALFUNCTION A first.

If DTC cannot be confirmed, perform PROCEDURE FOR MALFUNCTION B.
NOTE:
If DTC Confirmation Procedure has been previously conducted, always turn ignition switch OFF and wait at least 10 seconds before conducting the next test.

PROCEDURE FOR MALFUNCTION A

With CONSULT-III

1. Turn ignition switch ON and select “DATA MONITOR” mode with CONSULT-III.
2. Start engine and warm it up to the normal operating temperature.
3. Turn ignition switch OFF and wait at least 10 seconds.
4. Start engine and keep the engine speed between 3,500 and 4,000 rpm for at least 1 minute under no load.
5. Let engine idle for 2 minutes.
6. Check 1st trip DTC.
7. If 1st trip DTC is detected, go to EC-166, "Diagnosis Procedure".

With GST

Follow the procedure “With CONSULT-III” above.

PROCEDURE FOR MALFUNCTION B

With CONSULT-III

TESTING CONDITION:
For better results, perform “DTC WORK SUPPORT” at a temperature of 0 to 30 °C (32 to 86 °F).

1. Turn ignition switch ON and select “DATA MONITOR” mode with CONSULT-III.
2. Start engine and warm it up to the normal operating temperature.
3. Turn ignition switch OFF and wait at least 10 seconds.
4. Start engine and keep the engine speed between 3,500 and 4,000 rpm for at least 1 minute under no load.
5. Let engine idle for 1 minute.
6. Make sure that “COOLAN TEMP/S” indicates more than 70°C (158°F).
   If not, warm up engine and go to next step when “COOLAN TEMP/S” indication reaches to 70°C (158°F).
7. Open engine hood.
8. Select “HO2S2 (B1) P1146” (for DTC P0138) or “HO2S2 (B2) P1166” (for DTC P0158) of “HO2S2” in “DTC WORK SUPPORT” mode with CONSULT-III.
9. Start engine and following the instruction of CONSULT-III.
   NOTE:
   It will take at most 10 minutes until “COMPLETED” is displayed.
10. Make sure that “OK” is displayed after touching “SELF-DIAG RESULTS”.
    If “NG” is displayed, refer to EC-166, "Diagnosis Procedure".
    If “CAN NOT BE DIAGNOSED” is displayed, perform the following.

a. Turn ignition switch OFF and leave the vehicle in a cool place (soak the vehicle).
b. Return to step 1.

Overall Function Check

INFOID:0000000001351499

PROCEDURE FOR MALFUNCTION B

Use this procedure to check the overall function of the heated oxygen sensor 2 circuit. During this check, a 1st trip DTC might not be confirmed.

With GST

1. Start engine and warm it up to the normal operating temperature.
2. Turn ignition switch OFF and wait at least 10 seconds.
3. Start engine and keep the engine speed between 3,500 and 4,000 rpm for at least 1 minute under no load.
4. Let engine idle for 1 minute.
5. Set voltmeter probes between ECM terminal 55 [HO2S2 (B2) signal] or 74 [HO2S2 (B1) signal] and ground.

6. Check the voltage when revving up to 4,000 rpm under no load at least 10 times.
   (Depress and release accelerator pedal as soon as possible.)
   The voltage should be below 0.18V at least once during this procedure.
   If the voltage can be confirmed in step 6, step 7 is not necessary.
7. Keep vehicle at idling for 10 minutes, then check the voltage. Or check the voltage when coasting from 80 km/h (50 MPH) in D position.
   The voltage should be below 0.18V at least once during this procedure.
8. If NG, go to EC-166, "Diagnosis Procedure".

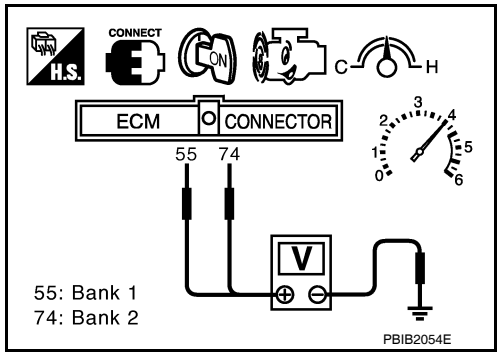

Diagnosis Procedure

INFOID:0000000001351501

PROCEDURE FOR MALFUNCTION A

1. CHECK GROUND CONNECTIONS

1. Turn ignition switch OFF.
2. Loosen and retighten two ground screws on the body.
   Refer to EC-86, "Ground Inspection".

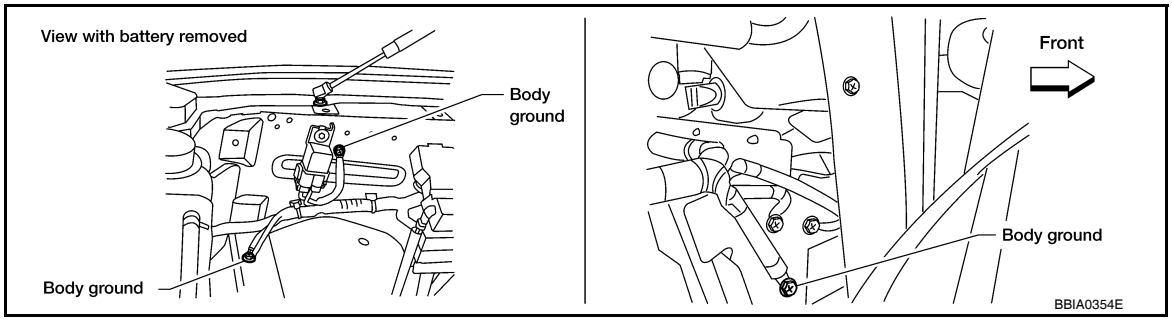

OK or NG

OK >> GO TO 2.
NG >> Repair or replace ground connections.

2. CHECK HO2S2 GROUND CIRCUIT FOR OPEN AND SHORT

1. Disconnect heated oxygen sensor 2 harness connector.

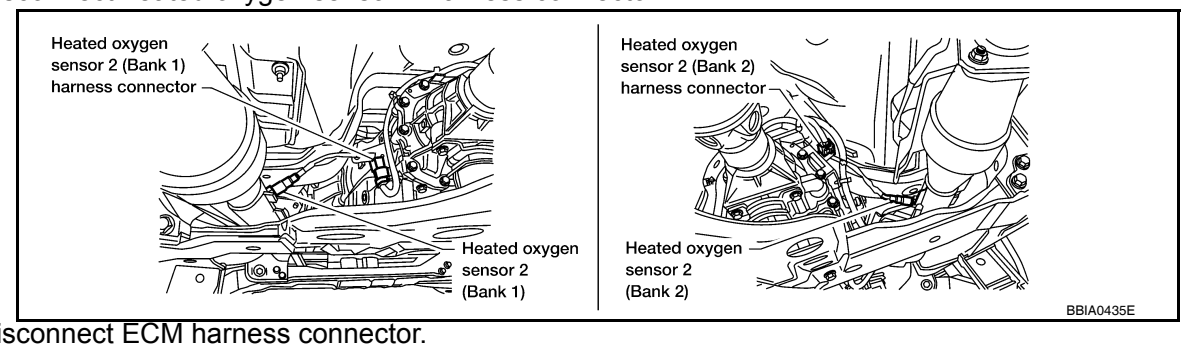

2. Disconnect ECM harness connector.
3. Check harness continuity between ECM terminal 78 and HO2S2 terminal 4.
   Refer to Wiring Diagram.

   Continuity should exist.

4. Also check harness for short to ground and short to power.

OK or NG

OK >> GO TO 3.
NG >> Repair open circuit or short to ground or short to power in harness or connectors.

3. CHECK HO2S2 INPUT SIGNAL CIRCUIT FOR OPEN AND SHORT

1. Check harness continuity between ECM terminal and HO2S2 terminal as follows.
Refer to Wiring Diagram.

DTC	Terminals		Bank
	ECM	Sensor	
P0138	55	1	1
P0158	74	1	2

Continuity should exist.

2. Check harness continuity between the following terminals and ground.
Refer to Wiring Diagram.

DTC	Terminals		Bank
	ECM	Sensor	
P0138	55	1	1
P0158	74	1	2

Continuity should not exist.

3. Also check harness for short to power.

OK or NG

OK >> GO TO 4.
NG >> Repair open circuit or short to ground or short to power in harness or connectors.

4. CHECK HO2S2 CONNECTOR FOR WATER

Check connectors for water.

Water should not exist.

OK or NG

OK >> GO TO 5.
NG >> Repair or replace harness or connectors.

5. CHECK HEATED OXYGEN SENSOR 2

Refer to EC-169, "Component Inspection".

OK or NG

OK >> GO TO 6.
NG >> Replace malfunctioning heated oxygen sensor 2.

6. CHECK INTERMITTENT INCIDENT

Refer to GI-35, "How to Check Terminal" and GI-38, "Intermittent Incident".

>> **INSPECTION END**

PROCEDURE FOR MALFUNCTION B

1. CHECK GROUND CONNECTIONS

1. Turn ignition switch OFF.
2. Loosen and retighten two ground screws on the body.

Refer to EC-86, "Ground Inspection".

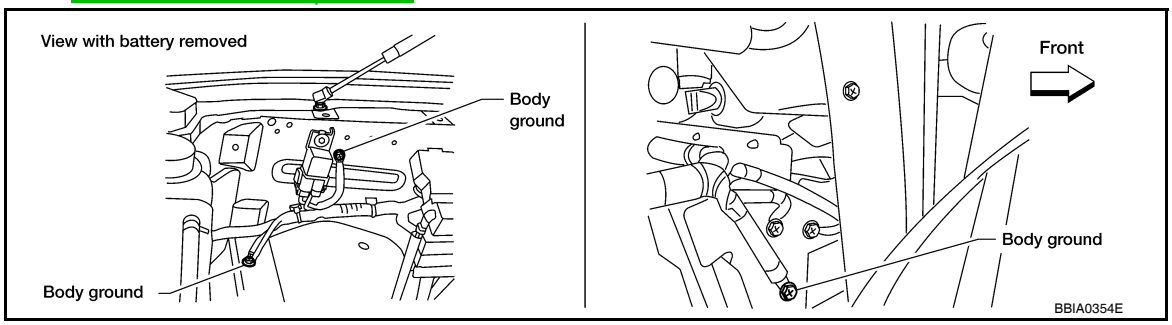

OK or NG

OK >> GO TO 2.
NG >> Repair or replace ground connections.

2. CLEAR THE SELF-LEARNING DATA

With CONSULT-III

1. Start engine and warm it up to normal operating temperature.
2. Select “SELF-LEARNING CONT” in “WORK SUPPORT” mode with CONSULT-III.
3. Clear the self-learning control coefficient by touching “CLEAR”.
4. Run engine for at least 10 minutes at idle speed.
   Is the 1st trip DTC P0172 or P0175 detected?
   Is it difficult to start engine?

Without CONSULT-III

1. Start engine and warm it up to normal operating temperature.
2. Turn ignition switch OFF.
3. Disconnect mass air flow sensor harness connector, and restart and run engine for at least 5 seconds at idle speed.
4. Stop engine and reconnect mass air flow sensor harness connector.
5. Make sure DTC P0102 is displayed.
6. Erase the DTC memory. Refer to EC-55, "Malfunction Indicator Lamp (MIL)".
7. Make sure DTC P0000 is displayed.
8. Run engine for at least 10 minutes at idle speed.
   Is the 1st trip DTC P0172 or P0175 detected?
   Is it difficult to start engine?

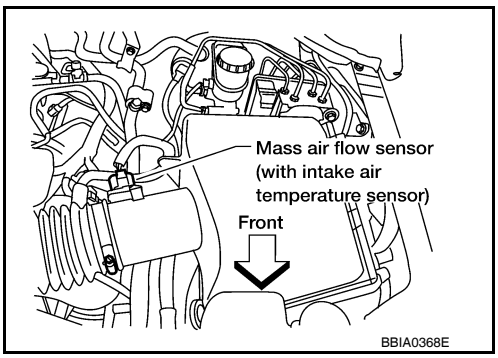

Yes or No

Yes >> Perform trouble diagnosis for DTC P0172, P0175. Refer to EC-182.
No >> GO TO 3.

3. CHECK HO2S2 GROUND CIRCUIT FOR OPEN AND SHORT

1. Turn ignition switch OFF.
2. Disconnect heated oxygen sensor 2 harness connector.

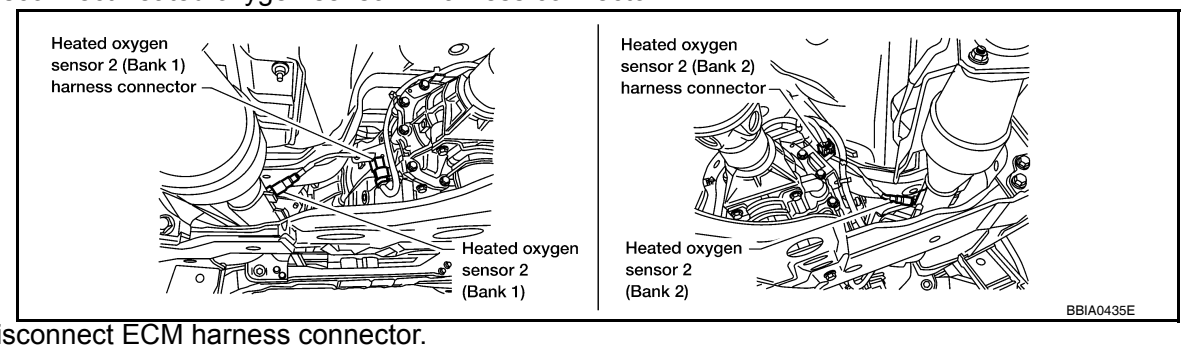

3. Disconnect ECM harness connector.
4. Check harness continuity between ECM terminal 78 and HO2S2 terminal 4.
   Refer to Wiring Diagram.

Continuity should exist.

5. Also check harness for short to ground and short to power.

OK or NG

OK >> GO TO 4.
NG >> Repair open circuit or short to ground or short to power in harness or connectors.

4. CHECK HO2S2 INPUT SIGNAL CIRCUIT FOR OPEN AND SHORT

1. Check harness continuity between ECM terminal and HO2S2 terminal as follows.
Refer to Wiring Diagram.

DTC	Terminals		Bank
	ECM	Sensor	
P0138	55	1	1
P0158	74	1	2

Continuity should exist.

2. Check harness continuity between the following terminals and ground.
Refer to Wiring Diagram.

DTC	Terminals		Bank
	ECM	Sensor	
P0138	55	1	1
P0158	74	1	2

Continuity should not exist.

3. Also check harness for short to power.

OK or NG

OK >> GO TO 5.
NG >> Repair open circuit or short to ground or short to power in harness or connectors.

5. CHECK HEATED OXYGEN SENSOR 2

Refer to EC-169, "Component Inspection".

OK or NG

OK >> GO TO 6.
NG >> Replace malfunctioning heated oxygen sensor 2.

6. CHECK INTERMITTENT INCIDENT

Refer to GI-35, "How to Check Terminal" and GI-38, "Intermittent Incident".

>> **INSPECTION END**

Component Inspection

INFOID:0000000001351502

HEATED OXYGEN SENSOR 2

With CONSULT-III

1. Turn ignition switch ON and select “DATA MONITOR” mode with CONSULT-III.
2. Start engine and warm it up to the normal operating temperature.
3. Turn ignition switch OFF and wait at least 10 seconds.
4. Start engine and keep the engine speed between 3,500 and 4,000 rpm for at least 1 minute under no load.
5. Let engine idle for 1 minute.

6. Select “FUEL INJECTION” in “ACTIVE TEST” mode, and select “HO2S2 (B1)/(B2)” as the monitor item with CONSULT-III.

7. Check “HO2S2 (B1)/(B2)” at idle speed when adjusting “FUEL INJECTION” to ±25%.

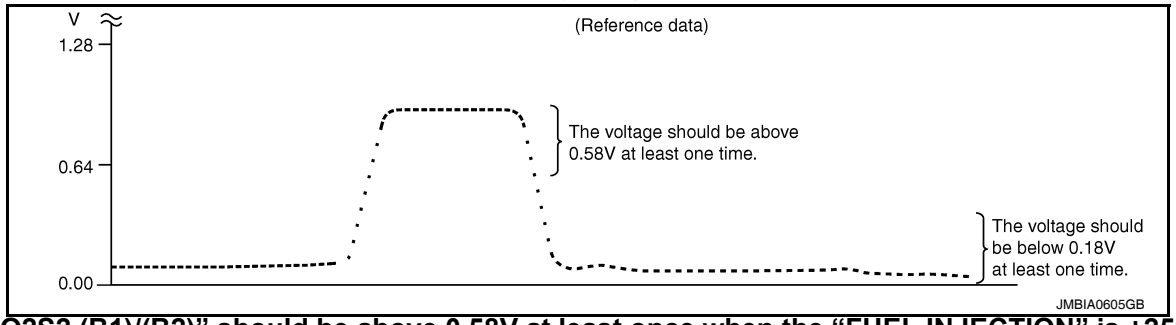

“HO2S2 (B1)/(B2)” should be above 0.58V at least once when the “FUEL INJECTION” is +25%.
“HO2S2 (B1)/(B2)” should be below 0.18V at least once when the “FUEL INJECTION” is –25%.

CAUTION:
- **Discard any heated oxygen sensor which has been dropped from a height of more than 0.5 m (19.7 in) onto a hard surface such as a concrete floor; use a new one.**
- **Before installing new oxygen sensor, clean exhaust system threads using Oxygen Sensor Thread Cleaner tool J-43897-18 or J-43897-12 and approved anti-seize lubricant.**

Without CONSULT-III

1. Start engine and warm it up to the normal operating temperature.
2. Turn ignition switch OFF and wait at least 10 seconds.
3. Start engine and keep the engine speed between 3,500 and 4,000 rpm for at least 1 minute under no load.
4. Let engine idle for 1 minute.
5. Set voltmeter probes between ECM terminal 55 [HO2S2 (B2) signal] or 74 [HO2S2 (B1) signal] and ground.
6. Check the voltage when revving up to 4,000 rpm under no load at least 10 times.
   (Depress and release accelerator pedal as soon as possible.)
   The voltage should be above 0.58V at least once during this procedure.
   If the voltage is above 0.58V at step 6, step 7 is not necessary.
7. Keep vehicle at idling for 10 minutes, then check voltage. Or check the voltage when coasting from 80 km/h (50 MPH) in D position.
   The voltage should be below 0.18V at least once during this procedure.

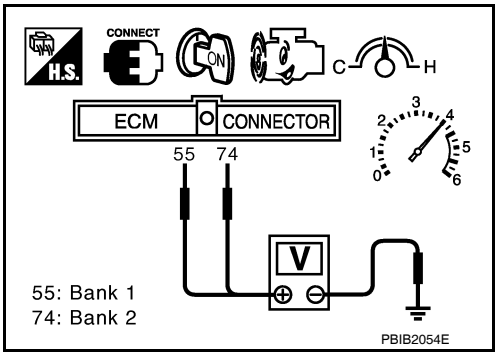

8. If NG, replace heated oxygen sensor 2.

CAUTION:
- **Discard any heated oxygen sensor which has been dropped from a height of more than 0.5 m (19.7 in) onto a hard surface such as a concrete floor; use a new one.**
- **Before installing new oxygen sensor, clean exhaust system threads (using Oxygen Sensor Thread Cleaner tool J-43897-18 or J-43897-12) and approved anti-seize lubricant.**

P0139, P0159 HO2S2

Component Description

INFOID:0000000001351504

The heated oxygen sensor 2, after three way catalyst (manifold), monitors the oxygen level in the exhaust gas on each bank.
Even if switching characteristics of the air fuel ratio (A/F) sensor 1 are shifted, the air-fuel ratio is controlled to stoichiometric, by the signal from the heated oxygen sensor 2.
This sensor is made of ceramic zirconia. The zirconia generates voltage from approximately 1V in richer conditions to 0V in leaner conditions.
Under normal conditions the heated oxygen sensor 2 is not used for engine control operation.

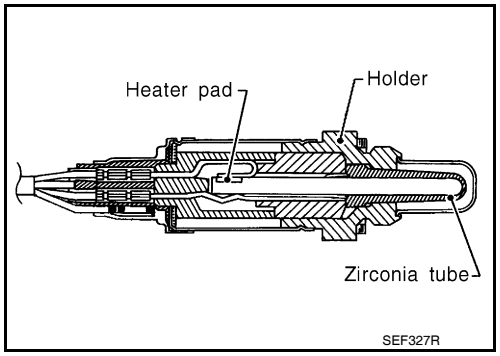

On Board Diagnosis Logic

INFOID:0000000001351506

The heated oxygen sensor 2 has a much longer switching time between rich and lean than the air fuel ratio (A/F) sensor 1. The oxygen storage capacity of the three way catalyst (manifold) causes the longer switching time. To judge the malfunctions of heated oxygen sensor 2, ECM monitors whether the switching response of the sensor's voltage is faster than specified during the various driving condition such as fuel-cut.

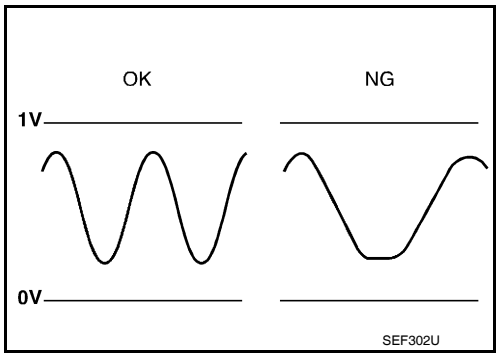

DTC No.	Trouble diagnosis name	DTC detecting condition	Possible cause
P0139 0139 (Bank 1)	Heated oxygen sensor 2 circuit slow response	It takes more time for the sensor to respond between rich and lean than the specified time.	• Harness or connectors (The sensor circuit is open or shorted) • Heated oxygen sensor 2 • Fuel pressure • Fuel injector • Intake air leaks
P0159 0159 (Bank 2)			

DTC Confirmation Procedure

INFOID:0000000001351507

NOTE:
If DTC Confirmation Procedure has been previously conducted, always turn ignition switch OFF and wait at least 10 seconds before conducting the next test.

WITH CONSULT-III

TESTING CONDITION:
For better results, perform “DTC WORK SUPPORT” at a temperature of 0 to 30 °C (32 to 86 °F).

1. Turn ignition switch ON and select “DATA MONITOR” mode with CONSULT-III.
2. Start engine and warm it up to the normal operating temperature.
3. Turn ignition switch OFF and wait at least 10 seconds.
4. Start engine and keep the engine speed between 3,500 and 4,000 rpm for at least 1 minute under no load.
5. Let engine idle for 1 minute.
6. Make sure that “COOLAN TEMP/S” indicates more than 70°C (158°F).
   If not, warm up engine and go to next step when “COOLAN TEMP/S” indication reaches to 70°C (158°F).
7. Open engine hood.
8. Select “HO2S2 (B1) P0139” or “HO2S2 (B2) P0159” of “HO2S2” in “DTC WORK SUPPORT” mode with CONSULT-III.

9. Start engine and following the instruction of CONSULT-III.
   NOTE:
   It will take at most 10 minutes until “COMPLETED” is displayed.
10. Make sure that “OK” is displayed after touching “SELF-DIAG RESULTS”.
    If “NG” is displayed, refer to EC-172, "Diagnosis Procedure".
    If “CAN NOT BE DIAGNOSED” is displayed, perform the following.

a. Turn ignition switch OFF and leave the vehicle in a cool place (soak the vehicle).
b. Return to step 1.

Overall Function Check

INFOID:0000000001351508

Use this procedure to check the overall function of the heated oxygen sensor 2 circuit. During this check, a 1st trip DTC might not be confirmed.

WITH GST

1. Start engine and warm it up to the normal operating temperature.
2. Turn ignition switch OFF and wait at least 10 seconds.
3. Start engine and keep the engine speed between 3,500 and 4,000 rpm for at least 1 minute under no load.
4. Let engine idle for 1 minute.
5. Set voltmeter probes between ECM terminal 55 [HO2S2 (B1) signal] or 74 [HO2S2 (B2) signal] and ground.
6. Check the voltage when revving up to 4,000 rpm under no load at least 10 times.
   (Depress and release accelerator pedal as soon as possible.)
   A change of voltage should be more than 0.12V for 1 second during this procedure.
   If the voltage can be confirmed in step 6, step 7 is not necessary.
7. Keep vehicle at idling for 10 minutes, then check the voltage. Or check the voltage when coasting from 80 km/h (50 MPH) in D position.
   A change of voltage should be more than 0.12V for 1 second during this procedure.
8. If NG, go to EC-172, "Diagnosis Procedure".

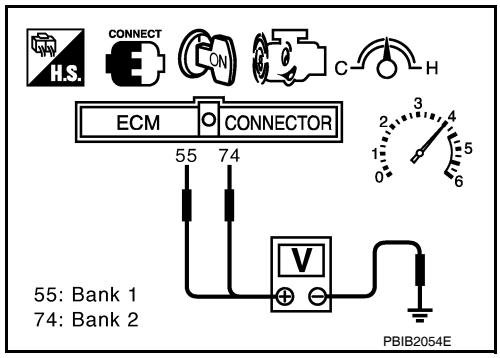

Diagnosis Procedure

INFOID:0000000001351510

1. CHECK GROUND CONNECTIONS

1. Turn ignition switch OFF.
2. Loosen and retighten three ground screws on the body.
   Refer to EC-86, "Ground Inspection".

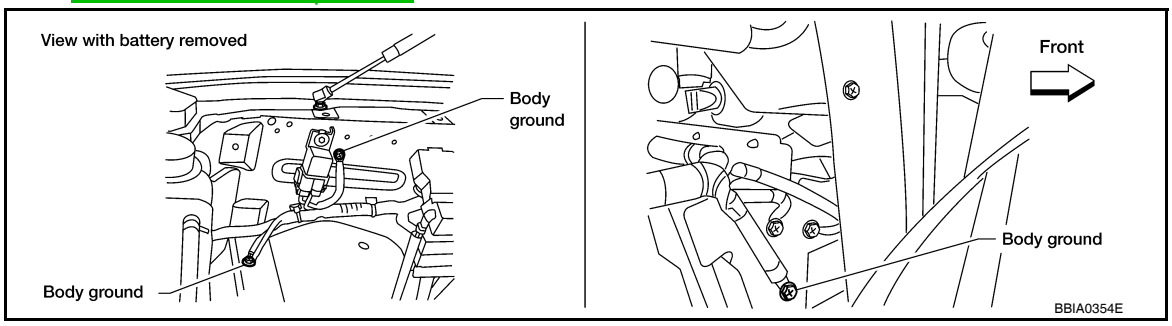

OK or NG

OK >> GO TO 2.
NG >> Repair or replace ground connections.

2. CLEAR THE SELF-LEARNING DATA

With CONSULT-III

1. Start engine and warm it up to normal operating temperature.

2. Select “SELF-LEARNING CONT” in “WORK SUPPORT” mode with CONSULT-III.
3. Clear the self-learning control coefficient by touching “CLEAR”.
4. Run engine for at least 10 minutes at idle speed.
   Is the 1st trip DTC P0171, P0172, P0174 or P0175 detected?
   Is it difficult to start engine?

Without CONSULT-III

1. Start engine and warm it up to normal operating temperature.
2. Turn ignition switch OFF.
3. Disconnect mass air flow sensor harness connector, and restart and run engine for at least 5 seconds at idle speed.
4. Stop engine and reconnect mass air flow sensor harness connector.
5. Make sure DTC P0102 is displayed.
6. Erase the DTC memory. Refer to EC-55, "Malfunction Indicator Lamp (MIL)".
7. Make sure DTC P0000 is displayed.
8. Run engine for at least 10 minutes at idle speed.
   Is the 1st trip DTC P0171, P0172, P0174 or P0175 detected?
   Is it difficult to start engine?

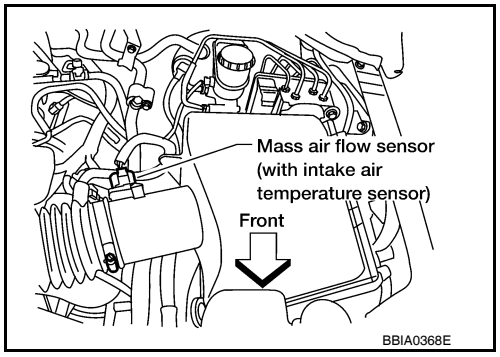

Yes or No

Yes >> Perform trouble diagnosis for DTC P0171, P0174 or P0172, P0175. Refer to EC-176 or EC-182.
No >> GO TO 3.

3. CHECK HO2S2 GROUND CIRCUIT FOR OPEN AND SHORT

1. Turn ignition switch OFF.
2. Disconnect heated oxygen sensor 2 harness connector.

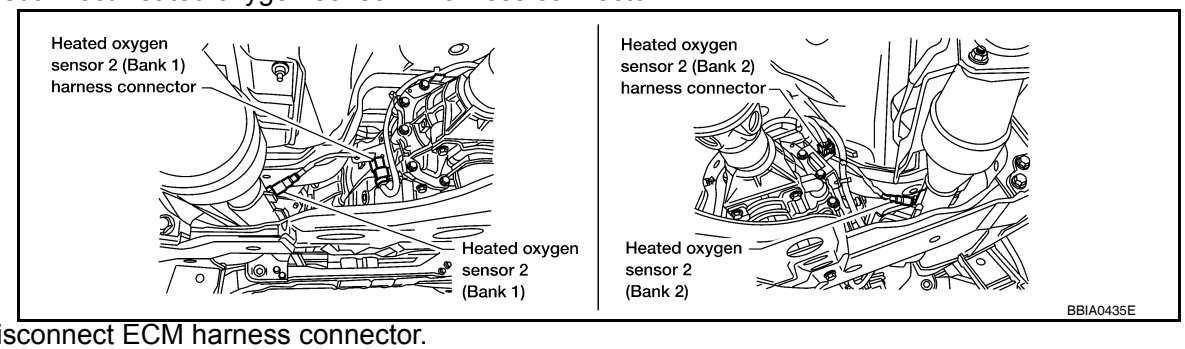

3. Disconnect ECM harness connector.
4. Check harness continuity between ECM terminal 78 and HO2S2 terminal 4.
   Refer to Wiring Diagram.

   Continuity should exist.

5. Also check harness for short to ground and short to power.

OK or NG

OK >> GO TO 4.
NG >> Repair open circuit or short to ground or short to power in harness or connectors.

4. CHECK HO2S2 INPUT SIGNAL CIRCUIT FOR OPEN AND SHORT

1. Check harness continuity between ECM terminal and HO2S2 terminal as follows.
   Refer to Wiring Diagram.

DTC	Terminals		Bank
	ECM	Sensor	
P0139	55	1	1
P0159	74	1	2

Continuity should exist.

2. Check harness continuity between the following terminals and ground.
Refer to Wiring Diagram.

DTC	Terminals		Bank
	ECM	Sensor	
P0139	55	1	1
P0159	74	1	2

Continuity should not exist.

3. Also check harness for short to power.

OK or NG

OK >> GO TO 5.
NG >> Repair open circuit or short to ground or short to power in harness or connectors.

5. CHECK HEATED OXYGEN SENSOR 2

Refer to EC-174, "Component Inspection".

OK or NG

OK >> GO TO 6.
NG >> Replace malfunctioning heated oxygen sensor 2.

6. CHECK INTERMITTENT INCIDENT

Refer to GI-35, "How to Check Terminal" and GI-38, "Intermittent Incident".

>> **INSPECTION END**

Component Inspection

INFOID:0000000001351511

HEATED OXYGEN SENSOR 2

With CONSULT-III

1. Turn ignition switch ON and select “DATA MONITOR” mode with CONSULT-III.
2. Start engine and warm it up to the normal operating temperature.
3. Turn ignition switch OFF and wait at least 10 seconds.
4. Start engine and keep the engine speed between 3,500 and 4,000 rpm for at least 1 minute under no load.
5. Let engine idle for 1 minute.
6. Select “FUEL INJECTION” in “ACTIVE TEST” mode, and select “HO2S2 (B1)/(B2)” as the monitor item with CONSULT-III.
7. Check “HO2S2 (B1)/(B2)” at idle speed when adjusting “FUEL INJECTION” to ±25%.

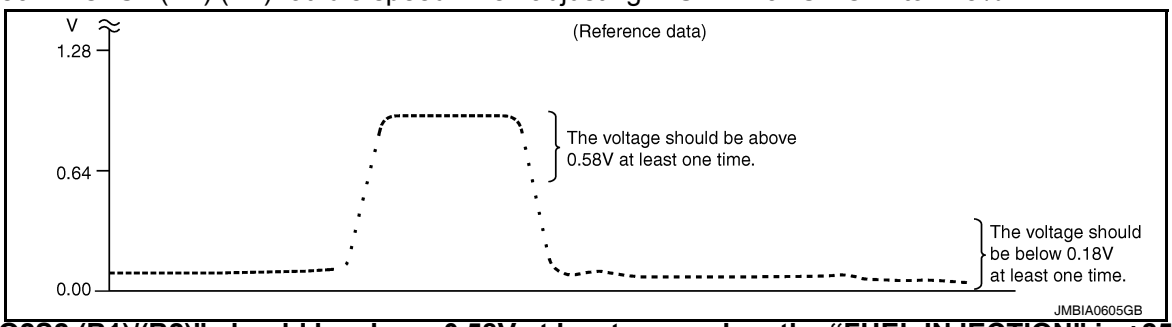

“HO2S2 (B1)/(B2)” should be above 0.58V at least once when the “FUEL INJECTION” is +25%.
“HO2S2 (B1)/(B2)” should be below 0.18V at least once when the “FUEL INJECTION” is –25%.

CAUTION:

- **Discard any heated oxygen sensor which has been dropped from a height of more than 0.5 m (19.7 in) onto a hard surface such as a concrete floor; use a new one.**

- **Before installing new oxygen sensor, clean exhaust system threads using Oxygen Sensor Thread Cleaner tool J-43897-18 or J-43897-12 and approved anti-seize lubricant.**

Without CONSULT-III

1. Start engine and warm it up to the normal operating temperature.
2. Turn ignition switch OFF and wait at least 10 seconds.
3. Start engine and keep the engine speed between 3,500 and 4,000 rpm for at least 1 minute under no load.
4. Let engine idle for 1 minute.
5. Set voltmeter probes between ECM terminal 55 [HO2S2 (B1) signal] or 74 [HO2S2 (B2) signal] and ground.
6. Check the voltage when revving up to 4,000 rpm under no load at least 10 times.
   (Depress and release accelerator pedal as soon as possible.)
   The voltage should be above 0.58V at least once during this procedure.
   If the voltage is above 0.58V at step 6, step 7 is not necessary.
7. Keep vehicle at idling for 10 minutes, then check voltage. Or check the voltage when coasting from 80 km/h (50 MPH) in D position.
   The voltage should be below 0.18V at least once during this procedure.
8. If NG, replace heated oxygen sensor 2.

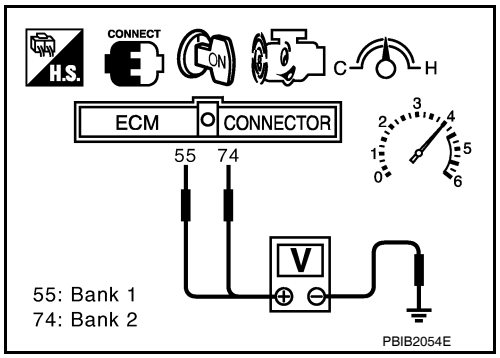

CAUTION:

- **Discard any heated oxygen sensor which has been dropped from a height of more than 0.5 m (19.7 in) onto a hard surface such as a concrete floor; use a new one.**
- **Before installing new oxygen sensor, clean exhaust system threads using Oxygen Sensor Thread Cleaner tool J-43897-18 or J-43897-12 and approved anti-seize lubricant.**

P0171, P0174 FUEL INJECTION SYSTEM FUNCTION

On Board Diagnosis Logic

INFOID:0000000001351513

With the Air/Fuel Mixture Ratio Self-Learning Control, the actual mixture ratio can be brought closely to the theoretical mixture ratio based on the mixture ratio feedback signal from the A/F sensors 1. The ECM calculates the necessary compensation to correct the offset between the actual and the theoretical ratios.
In case the amount of the compensation value is extremely large (The actual mixture ratio is too lean.), the ECM judges the condition as the fuel injection system malfunction and lights up the MIL (2 trip detection logic).

Sensor	Input signal to ECM	ECM function	Actuator
A/F sensor 1	Density of oxygen in exhaust gas (Mixture ratio feedback signal)	Fuel injection control	Fuel injector

DTC No.	Trouble diagnosis name	DTC detecting condition	Possible cause
P0171 0171 (Bank 1)	Fuel injection system too lean	• Fuel injection system does not operate properly. • The amount of mixture ratio compensation is too large. (The mixture ratio is too lean.)	• Intake air leaks • A/F sensor 1 • Fuel injector • Exhaust gas leaks • Incorrect fuel pressure • Lack of fuel • Mass air flow sensor • Incorrect PCV hose connection
P0174 0174 (Bank 2)			

DTC Confirmation Procedure

INFOID:0000000001351514

NOTE:
Check vehicle specifications and VIN, then select the procedure to be performed. (Refer to the table below.)

Vehicle specification	Vehicle serial number	Procedure
2WD with ASCD	Up to 912536	A
	From 912537	B
2WD with ICC	Up to 914347	A
	From 914348	B
4WD with ASCD	Up to 913067	A
	From 913068	B
4WD with ICC	Up to 912422	A
	From 912423	B

PROCEDURE A

NOTE:
If DTC Confirmation Procedure has been previously conducted, always turn ignition switch OFF and wait at least 10 seconds before conducting the next test.

With CONSULT-III

1. Start engine and warm it up to normal operating temperature.
2. Turn ignition switch OFF and wait at least 10 seconds.
3. Turn ignition switch ON and select “SELF-LEARNING CONT” in “WORK SUPPORT” mode with CONSULT-III.
4. Clear the self-learning control coefficient by touching “CLEAR”.
5. Start engine again and let it idle for at least 10 minutes.
6. Check 1st trip DTC.
   The 1st trip DTC P0171 or P0174 should be detected at this stage, if a malfunction exists. If so, go to EC-179, "Diagnosis Procedure".
   NOTE:
   If 1st trip DTC is not detected during above procedure, performing the following procedure is advised.

a. Turn ignition switch OFF and wait at least 10 seconds.
b. Start engine and drive the vehicle under the similar conditions to (1st trip) Freeze Frame Data for 10 minutes. Refer to the table below.
Hold the accelerator pedal as steady as possible.

The similar conditions to (1st trip) Freeze Frame Data means the vehicle operation that the following conditions should be satisfied at the same time.

Engine speed	Engine speed in the freeze frame data ± 400 rpm
Vehicle speed	Vehicle speed in the freeze frame data ± 10 km/h (6 MPH)
Engine coolant temperature (T) condition	When the freeze frame data shows lower than 70 °C (158 °F), T should be lower than 70 °C (158 °F).
	When the freeze frame data shows higher than or equal to 70 °C (158 °F), T should be higher than or equal to 70 °C (158 °F).

7. If it is difficult to start engine at step 6, the fuel injection system has a malfunction, too.
8. Crank engine while depressing accelerator pedal. If engine starts, go to EC-179, "Diagnosis Procedure". If engine does not start, check exhaust and intake air leak visually.

With GST

1. Start engine and warm it up to normal operating temperature.
2. Turn ignition switch OFF and wait at least 10 seconds.
3. Disconnect mass air flow sensor harness connector.
4. Restart engine and let it idle for at least 5 seconds.
5. Stop engine and reconnect mass air flow sensor harness connector.
6. Select Service $03 with GST. Make sure DTC P0102 is detected.
7. Select Service $04 with GST and erase the DTC P0102.
8. Start engine again and let it idle for at least 10 minutes.
9. Select Service $07 with GST. The 1st trip DTC P0171 or P0174 should be detected at this stage, if a malfunction exists. If so, go to EC-179, "Diagnosis Procedure".

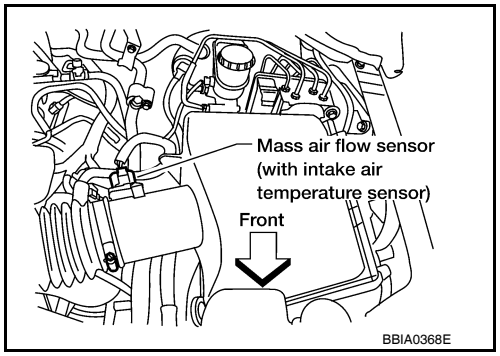

NOTE:
If 1st trip DTC is not detected during above procedure, performing the following procedure is advised.

a. Turn ignition switch OFF and wait at least 10 seconds.
b. Start engine and drive the vehicle under the similar conditions to (1st trip) Freeze Frame Data for 10 minutes. Refer to the table below.
Hold the accelerator pedal as steady as possible.

The similar conditions to (1st trip) Freeze Frame Data means the vehicle operation that the following conditions should be satisfied at the same time.

Engine speed	Engine speed in the freeze frame data ± 400 rpm
Vehicle speed	Vehicle speed in the freeze frame data ± 10 km/h (6 MPH)
Engine coolant temperature (T) condition	When the freeze frame data shows lower than 70 °C (158 °F), T should be lower than 70 °C (158 °F).
	When the freeze frame data shows higher than or equal to 70 °C (158 °F), T should be higher than or equal to 70 °C (158 °F).

10. If it is difficult to start engine at step 8, the fuel injection system has a malfunction.
11. Crank engine while depressing accelerator pedal. If engine starts, go to EC-179, "Diagnosis Procedure". If engine does not start, check exhaust and intake air leak visually.

PROCEDURE B

NOTE:

If DTC Confirmation Procedure has been previously conducted, always turn ignition switch OFF and wait at least 10 seconds before conducting the next test.

With CONSULT-III

1. Start engine and warm it up to normal operating temperature.
2. Turn ignition switch OFF and wait at least 10 seconds.
3. Turn ignition switch ON and select “SELF-LEARNING CONT” in “WORK SUPPORT” mode with CONSULT-III.
4. Clear the self-learning control coefficient by touching “CLEAR”.
5. Start engine again and let it idle for at least 5 minutes.
6. Check 1st trip DTC.
   The 1st trip DTC P0171 or P0174 should be detected at this stage, if a malfunction exists. If so, go to EC-179, "Diagnosis Procedure".
   NOTE:
   If 1st trip DTC is not detected during above procedure, performing the following procedure is advised.

a. Turn ignition switch OFF and wait at least 10 seconds.
b. Start engine and drive the vehicle under the similar conditions to (1st trip) Freeze Frame Data for 10 minutes. Refer to the table below.
   Hold the accelerator pedal as steady as possible.

   The similar conditions to (1st trip) Freeze Frame Data means the vehicle operation that the following conditions should be satisfied at the same time.

Engine speed	Engine speed in the freeze frame data ± 400 rpm
Vehicle speed	Vehicle speed in the freeze frame data ± 10 km/h (6 MPH)
Engine coolant temperature (T) condition	When the freeze frame data shows lower than 70 °C (158 °F), T should be lower than 70 °C (158 °F).
	When the freeze frame data shows higher than or equal to 70 °C (158 °F), T should be higher than or equal to 70 °C (158 °F).

7. If it is difficult to start engine at step 6, the fuel injection system has a malfunction, too.
8. Crank engine while depressing accelerator pedal. If engine starts, go to EC-179, "Diagnosis Procedure". If engine does not start, check exhaust and intake air leak visually.

With GST

1. Start engine and warm it up to normal operating temperature.
2. Turn ignition switch OFF and wait at least 10 seconds.
3. Disconnect mass air flow sensor harness connector.
4. Restart engine and let it idle for at least 5 seconds.
5. Stop engine and reconnect mass air flow sensor harness connector.
6. Select Service $03 with GST. Make sure DTC P0102 is detected.
7. Select Service $04 with GST and erase the DTC P0102.
8. Start engine again and let it idle for at least 5 minutes.
9. Select Service $07 with GST. The 1st trip DTC P0171 or P0174 should be detected at this stage, if a malfunction exists. If so, go to EC-179, "Diagnosis Procedure".
   NOTE:
   If 1st trip DTC is not detected during above procedure, performing the following procedure is advised.

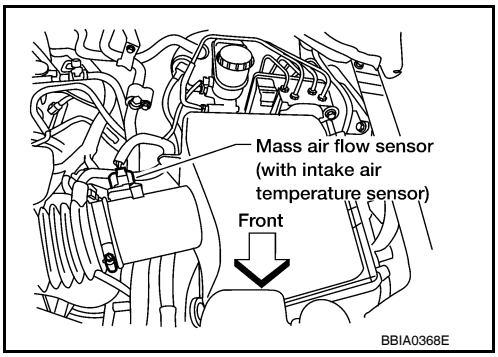

a. Turn ignition switch OFF and wait at least 10 seconds.
b. Start engine and drive the vehicle under the similar conditions to (1st trip) Freeze Frame Data for 10 minutes. Refer to the table below.
   Hold the accelerator pedal as steady as possible.

The similar conditions to (1st trip) Freeze Frame Data means the vehicle operation that the following conditions should be satisfied at the same time.

Engine speed	Engine speed in the freeze frame data ± 400 rpm
Vehicle speed	Vehicle speed in the freeze frame data ± 10 km/h (6 MPH)
Engine coolant temperature (T) condition	When the freeze frame data shows lower than 70 °C (158 °F), T should be lower than 70 °C (158 °F).
	When the freeze frame data shows higher than or equal to 70 °C (158 °F), T should be higher than or equal to 70 °C (158 °F).

10. If it is difficult to start engine at step 8, the fuel injection system has a malfunction.
11. Crank engine while depressing accelerator pedal. If engine starts, go to EC-179, "Diagnosis Procedure". If engine does not start, check exhaust and intake air leak visually.

Diagnosis Procedure

INFOID:0000000001351516

1. CHECK EXHAUST GAS LEAK

1. Start engine and run it at idle.
2. Listen for an exhaust gas leak before three way catalyst (manifold).

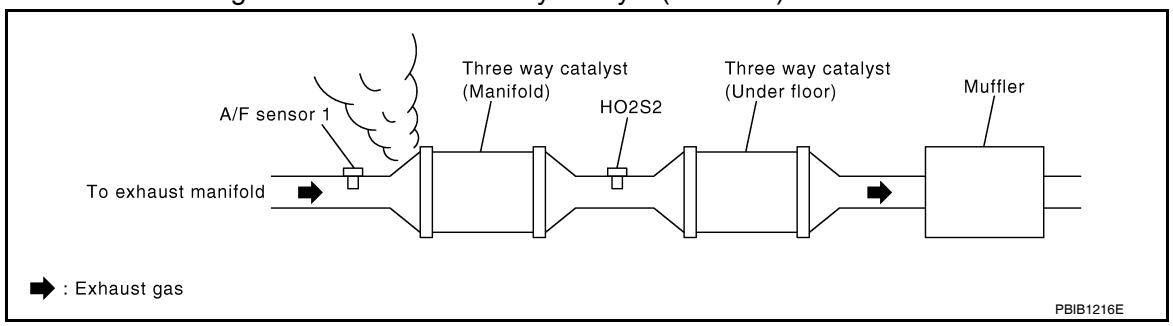

OK or NG

OK >> GO TO 2.
NG >> Repair or replace.

2. CHECK FOR INTAKE AIR LEAK

1. Listen for an intake air leak after the mass air flow sensor.
2. Check PCV hose connection.

OK or NG

OK >> GO TO 3.
NG >> Repair or replace.

3. CHECK A/F SENSOR 1 INPUT SIGNAL CIRCUIT

1. Turn ignition switch OFF.
2. Disconnect corresponding A/F sensor 1 harness connector.

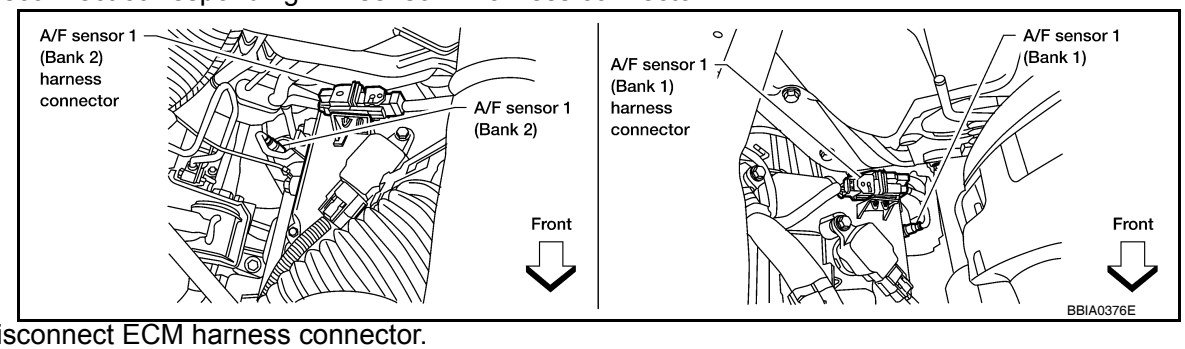

3. Disconnect ECM harness connector.
4. Check harness continuity between the following terminals. Refer to Wiring Diagram.

	A/F sensor 1 terminal	ECM terminal
Bank 1	1	35
	2	56
Bank 2	1	16
	2	75

Continuity should exist.

5. Check harness continuity between the following terminals and ground.
Refer to Wiring Diagram.

Bank 1		Bank 2	
A/F sensor 1 terminal	ECM terminal	A/F sensor 1 terminal	ECM terminal
1	35	1	16
2	56	2	75

Continuity should not exist.

6. Also check harness for short to power.

OK or NG

OK >> GO TO 4.
NG >> Repair open circuit or short to ground or short to power in harness or connectors.

4. CHECK FUEL PRESSURE

1. Release fuel pressure to zero. Refer to EC-494, "Fuel Pressure Check".
2. Install fuel pressure gauge and check fuel pressure. Refer to EC-494, "Fuel Pressure Check".

At idling: Approximately 350 kPa (3.57 kg/cm^2, 51 psi)

OK or NG

OK >> GO TO 6.
NG >> GO TO 5.

5. DETECT MALFUNCTIONING PART

Check the following.
- Fuel pump and circuit (Refer to EC-402, "Diagnosis Procedure".)
- Fuel pressure regulator (Refer to EC-494, "Fuel Pressure Check".)
- Fuel lines
- Fuel filter for clogging

>> Repair or replace.

6. CHECK MASS AIR FLOW SENSOR

With CONSULT-III
1. Install all removed parts.
2. Check “MASS AIR FLOW” in “DATA MONITOR” mode with CONSULT-III.

3.0 - 9.0 g·m/sec: at idling
9.0 - 28.0 g·m/sec: at 2,500 rpm

With GST
1. Install all removed parts.
2. Check mass air flow sensor signal in Service $01 with GST.

3.0 - 9.0 g·m/sec: at idling
9.0 - 28.0 g·m/sec: at 2,500 rpm

OK or NG

OK >> GO TO 7.
NG >> Check connectors for rusted terminals or loose connections in the mass air flow sensor circuit or grounds. Refer to EC-106.

7. CHECK FUNCTION OF FUEL INJECTOR

With CONSULT-III

1. Start engine.
2. Perform “POWER BALANCE” in “ACTIVE TEST” mode with CONSULT-III.
3. Make sure that each circuit produces a momentary engine speed drop.

Without CONSULT-III

1. Start engine.
2. Listen to each fuel injector operating sound.

Clicking noise should be heard.

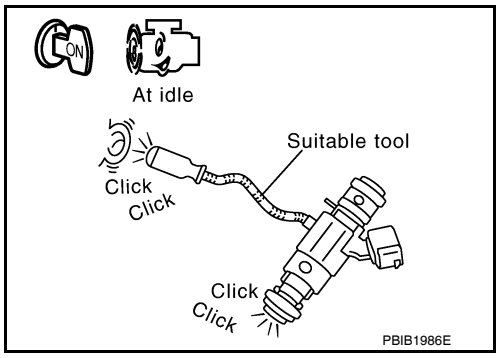

OK or NG

OK >> GO TO 8.
NG >> Perform trouble diagnosis for FUEL INJECTOR, refer to EC-399, "Diagnosis Procedure".

8. CHECK FUEL INJECTOR

1. Confirm that the engine is cooled down and there are no fire hazards near the vehicle.
2. Turn ignition switch OFF.
3. Disconnect all fuel injector harness connectors.
4. Remove fuel injector gallery assembly. Refer to EM-40, "Removal and Installation".
   Keep fuel hose and all fuel injectors connected to fuel injector gallery.
5. For DTC P0171, reconnect fuel injector harness connectors on bank 1.
   For DTC P0174, reconnect fuel injector harness connectors on bank 2.
6. Disconnect all ignition coil harness connectors.
7. Prepare pans or saucers under each fuel injector.
8. Crank engine for about 3 seconds.
   For DTC P0171, make sure that fuel sprays out from fuel injectors on bank 1.
   For DTC P0174, make sure that fuel sprays out from fuel injectors on bank 2.

Fuel should be sprayed evenly for each fuel injector.

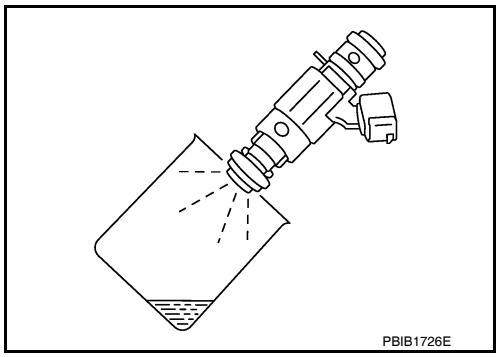

OK or NG

OK >> GO TO 9.
NG >> Replace fuel injectors from which fuel does not spray out. Always replace O-ring with new ones.

9. CHECK INTERMITTENT INCIDENT

Refer to GI-35, "How to Check Terminal" and GI-38, "Intermittent Incident".

>> **INSPECTION END**

P0172, P0175 FUEL INJECTION SYSTEM FUNCTION

On Board Diagnosis Logic

INFOID:0000000001351517

With the Air/Fuel Mixture Ratio Self-Learning Control, the actual mixture ratio can be brought closely to the theoretical mixture ratio based on the mixture ratio feedback signal from the A/F sensors 1. The ECM calculates the necessary compensation to correct the offset between the actual and the theoretical ratios.
In case the amount of the compensation value is extremely large (The actual mixture ratio is too rich.), the ECM judges the condition as the fuel injection system malfunction and lights up the MIL (2 trip detection logic).

Sensor	Input signal to ECM	ECM function	Actuator
A/F sensor 1	Density of oxygen in exhaust gas (Mixture ratio feedback signal)	Fuel injection control	Fuel injector

DTC No.	Trouble diagnosis name	DTC detecting condition	Possible cause
P0172 0172 (Bank 1)	Fuel injection system too rich	• Fuel injection system does not operate properly. • The amount of mixture ratio compensation is too large. (The mixture ratio is too rich.)	• A/F sensor 1 • Fuel injector • Exhaust gas leaks • Incorrect fuel pressure • Mass air flow sensor
P0175 0175 (Bank 2)			

DTC Confirmation Procedure

INFOID:0000000001351518

NOTE:
Check vehicle specifications and VIN, then select the procedure to be performed. (Refer to the table below.)

Vehicle specification	Vehicle serial number	Procedure
2WD with ASCD	Up to 912536	A
	From 912537	B
2WD with ICC	Up to 914347	A
	From 914348	B
4WD with ASCD	Up to 913067	A
	From 913068	B
4WD with ICC	Up to 912422	A
	From 912423	B

PROCEDURE A

NOTE:
If DTC Confirmation Procedure has been previously conducted, always turn ignition switch OFF and wait at least 10 seconds before conducting the next test.

With CONSULT-III

1. Start engine and warm it up to normal operating temperature.
2. Turn ignition switch OFF and wait at least 10 seconds.
3. Turn ignition switch ON and select “SELF-LEARNING CONT” in “WORK SUPPORT” mode with CONSULT-III.
4. Clear the self-learning control coefficient by touching “CLEAR”.
5. Start engine again and let it idle for at least 10 minutes.
6. Check 1st trip DTC.
   The 1st trip DTC P0172, P0175 should be detected at this stage, if a malfunction exists. If so, go to EC-185, "Diagnosis Procedure".
   NOTE:
   If 1st trip DTC is not detected during above procedure, performing the following procedure is advised.

a. Turn ignition switch OFF and wait at least 10 seconds.

b. Start engine and drive the vehicle under the similar conditions to (1st trip) Freeze Frame Data for 10 minutes. Refer to the table below.
Hold the accelerator pedal as steady as possible.

The similar conditions to (1st trip) Freeze Frame Data means the vehicle operation that the following conditions should be satisfied at the same time.

Engine speed	Engine speed in the freeze frame data ± 400 rpm
Vehicle speed	Vehicle speed in the freeze frame data ± 10 km/h (6 MPH)
Engine coolant temperature (T) condition	When the freeze frame data shows lower than 70 °C (158 °F), T should be lower than 70 °C (158 °F).
	When the freeze frame data shows higher than or equal to 70 °C (158 °F), T should be higher than or equal to 70 °C (158 °F).

7. If it is difficult to start engine at step 6, the fuel injection system has a malfunction, too.
8. Crank engine while depressing accelerator pedal.
If engine starts, go to EC-185, "Diagnosis Procedure". If engine does not start, remove spark plugs and check for fouling, etc.

With GST

1. Start engine and warm it up to normal operating temperature.
2. Turn ignition switch OFF and wait at least 10 seconds.
3. Disconnect mass air flow sensor harness connector. Then restart and run engine for at least 5 seconds at idle speed.
4. Stop engine and reconnect mass air flow sensor harness connector.
5. Select Service $03 with GST. Make sure DTC P0102 is detected.
6. Select Service $04 with GST and erase the DTC P0102.
7. Start engine again and let it idle for at least 10 minutes.
8. Select Service $07 with GST. The 1st trip DTC P0172 or P0175 should be detected at this stage, if a malfunction exists. If so, go to EC-185, "Diagnosis Procedure".

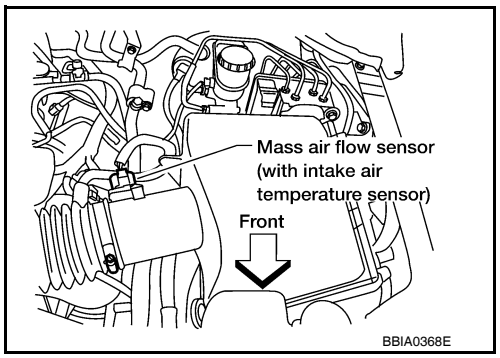

NOTE:
If 1st trip DTC is not detected during above procedure, performing the following procedure is advised.

a. Turn ignition switch OFF and wait at least 10 seconds.
b. Start engine and drive the vehicle under the similar conditions to (1st trip) Freeze Frame Data for 10 minutes. Refer to the table below.
Hold the accelerator pedal as steady as possible.

The similar conditions to (1st trip) Freeze Frame Data means the vehicle operation that the following conditions should be satisfied at the same time.

Engine speed	Engine speed in the freeze frame data ± 400 rpm
Vehicle speed	Vehicle speed in the freeze frame data ± 10 km/h (6 MPH)
Engine coolant temperature (T) condition	When the freeze frame data shows lower than 70 °C (158 °F), T should be lower than 70 °C (158 °F).
	When the freeze frame data shows higher than or equal to 70 °C (158 °F), T should be higher than or equal to 70 °C (158 °F).

9. If it is difficult to start engine at step 7, the fuel injection system has a malfunction.
10. Crank engine while depressing accelerator pedal.
If engine starts, go to EC-185, "Diagnosis Procedure". If engine does not start, remove spark plugs and check for fouling, etc.

PROCEDURE B

NOTE:
If DTC Confirmation Procedure has been previously conducted, always turn ignition switch OFF and wait at least 10 seconds before conducting the next test.

With CONSULT-III

1. Start engine and warm it up to normal operating temperature.
2. Turn ignition switch OFF and wait at least 10 seconds.
3. Turn ignition switch ON and select “SELF-LEARNING CONT” in “WORK SUPPORT” mode with CONSULT-III.
4. Clear the self-learning control coefficient by touching “CLEAR”.
5. Start engine again and let it idle for at least 5 minutes.
6. Check 1st trip DTC.
   The 1st trip DTC P0172, P0175 should be detected at this stage, if a malfunction exists. If so, go to EC-185, "Diagnosis Procedure".
   NOTE:
   If 1st trip DTC is not detected during above procedure, performing the following procedure is advised.

a. Turn ignition switch OFF and wait at least 10 seconds.
b. Start engine and drive the vehicle under the similar conditions to (1st trip) Freeze Frame Data for 10 minutes. Refer to the table below.
   Hold the accelerator pedal as steady as possible.

   The similar conditions to (1st trip) Freeze Frame Data means the vehicle operation that the following conditions should be satisfied at the same time.

Engine speed	Engine speed in the freeze frame data ± 400 rpm
Vehicle speed	Vehicle speed in the freeze frame data ± 10 km/h (6 MPH)
Engine coolant temperature (T) condition	When the freeze frame data shows lower than 70 °C (158 °F), T should be lower than 70 °C (158 °F).
	When the freeze frame data shows higher than or equal to 70 °C (158 °F), T should be higher than or equal to 70 °C (158 °F).

7. If it is difficult to start engine at step 6, the fuel injection system has a malfunction, too.
8. Crank engine while depressing accelerator pedal.
   If engine starts, go to EC-185, "Diagnosis Procedure". If engine does not start, remove spark plugs and check for fouling, etc.

With GST

1. Start engine and warm it up to normal operating temperature.
2. Turn ignition switch OFF and wait at least 10 seconds.
3. Disconnect mass air flow sensor harness connector. Then restart and run engine for at least 5 seconds at idle speed.
4. Stop engine and reconnect mass air flow sensor harness connector.
5. Select Service $03 with GST. Make sure DTC P0102 is detected.
6. Select Service $04 with GST and erase the DTC P0102.
7. Start engine again and let it idle for at least 5 minutes.
8. Select Service $07 with GST. The 1st trip DTC P0172 or P0175 should be detected at this stage, if a malfunction exists. If so, go to EC-185, "Diagnosis Procedure".
   NOTE:
   If 1st trip DTC is not detected during above procedure, performing the following procedure is advised.

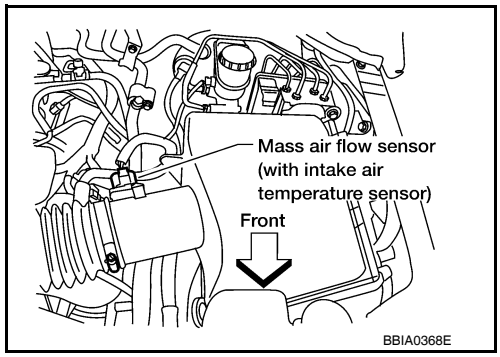

a. Turn ignition switch OFF and wait at least 10 seconds.
b. Start engine and drive the vehicle under the similar conditions to (1st trip) Freeze Frame Data for 10 minutes. Refer to the table below.

Hold the accelerator pedal as steady as possible.

The similar conditions to (1st trip) Freeze Frame Data means the vehicle operation that the following conditions should be satisfied at the same time.

Engine speed	Engine speed in the freeze frame data ± 400 rpm
Vehicle speed	Vehicle speed in the freeze frame data ± 10 km/h (6 MPH)
Engine coolant temperature (T) condition	When the freeze frame data shows lower than 70 °C (158 °F), T should be lower than 70 °C (158 °F).
	When the freeze frame data shows higher than or equal to 70 °C (158 °F), T should be higher than or equal to 70 °C (158 °F).

9. If it is difficult to start engine at step 7, the fuel injection system has a malfunction.
10. Crank engine while depressing accelerator pedal.
    If engine starts, go to EC-185, "Diagnosis Procedure". If engine does not start, remove spark plugs and check for fouling, etc.

Diagnosis Procedure

INFOID:0000000001351520

1. CHECK EXHAUST GAS LEAK

1. Start engine and run it at idle.
2. Listen for an exhaust gas leak before three way catalyst (manifold).

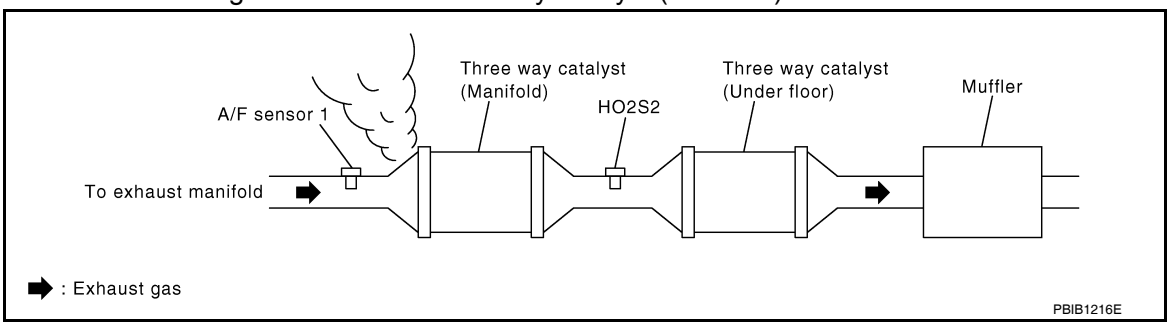

OK or NG

OK >> GO TO 2.
NG >> Repair or replace.

2. CHECK FOR INTAKE AIR LEAK

Listen for an intake air leak after the mass air flow sensor.

OK or NG

OK >> GO TO 3.
NG >> Repair or replace.

3. CHECK A/F SENSOR 1 INPUT SIGNAL CIRCUIT

1. Turn ignition switch OFF.
2. Disconnect corresponding A/F sensor 1 harness connector.

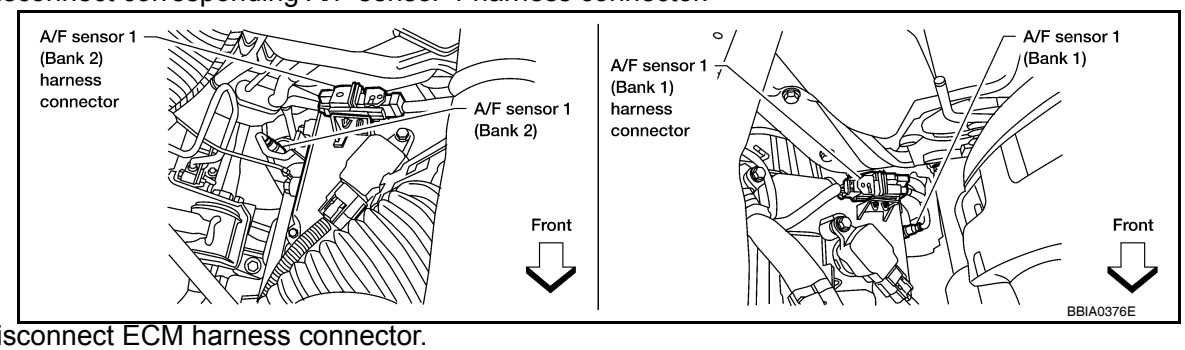

3. Disconnect ECM harness connector.
4. Check harness continuity between the following terminals.
   Refer to Wiring Diagram.

	A/F sensor 1 terminal	ECM terminal
Bank 1	1	35
	2	56
Bank 2	1	16
	2	75

Continuity should exist.

5. Check harness continuity between the following terminals and ground.
Refer to Wiring Diagram.

Bank 1		Bank 2	
A/F sensor 1 terminal	ECM terminal	A/F sensor 1 terminal	ECM terminal
1	35	1	16
2	56	2	75

Continuity should not exist.

6. Also check harness for short to power.

OK or NG

OK >> GO TO 4.
NG >> Repair open circuit or short to ground or short to power in harness or connectors.

4. CHECK FUEL PRESSURE

1. Release fuel pressure to zero. Refer to EC-494, "Fuel Pressure Check".
2. Install fuel pressure gauge and check fuel pressure. Refer to EC-494, "Fuel Pressure Check".

At idling: Approximately 350 kPa (3.57 kg/cm^2, 51 psi)

OK or NG

OK >> GO TO 6.
NG >> GO TO 5.

5. DETECT MALFUNCTIONING PART

Check the following.
- Fuel pump and circuit (Refer to EC-402, "Diagnosis Procedure".)
- Fuel pressure regulator (Refer to EC-494, "Fuel Pressure Check".)

>> Repair or replace.

6. CHECK MASS AIR FLOW SENSOR

With CONSULT-III

1. Install all removed parts.
2. Check “MASS AIR FLOW” in “DATA MONITOR” mode with CONSULT-III.

3.0 - 9.0 g·m/sec: at idling
9.0 - 28.0 g·m/sec: at 2,500 rpm

With GST

1. Install all removed parts.
2. Check mass air flow sensor signal in Service $01 with GST.

3.0 - 9.0 g·m/sec: at idling
9.0 - 28.0 g·m/sec: at 2,500 rpm

OK or NG

OK >> GO TO 7.
NG >> Check connectors for rusted terminals or loose connections in the mass air flow sensor circuit or grounds. Refer to EC-106.

7. CHECK FUNCTION OF FUEL INJECTOR

With CONSULT-III

1. Start engine.
2. Perform “POWER BALANCE” in “ACTIVE TEST” mode with CONSULT-III.
3. Make sure that each circuit produces a momentary engine speed drop.

Without CONSULT-III

1. Start engine.
2. Listen to each fuel injector operating sound.

Clicking noise should be heard.

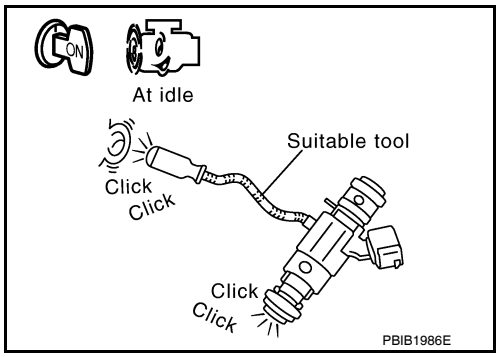

OK or NG

OK >> GO TO 8.
NG >> Perform trouble diagnosis for FUEL INJECTOR, refer to EC-399, "Diagnosis Procedure".

8. CHECK FUEL INJECTOR

1. Remove fuel injector assembly. Refer to EM-40, "Removal and Installation".
   Keep fuel hose and all fuel injectors connected to fuel injector gallery.
2. Confirm that the engine is cooled down and there are no fire hazards near the vehicle.
3. Disconnect all fuel injector harness connectors.
4. Disconnect all ignition coil harness connectors.
5. Prepare pans or saucers under each fuel injectors.
6. Crank engine for about 3 seconds.
   Make sure fuel does not drip from fuel injector.

OK or NG

OK (Does not drip.)>>GO TO 9.
NG (Drips.)>>Replace the fuel injectors from which fuel is dripping. Always replace O-ring with new one.

9. CHECK INTERMITTENT INCIDENT

Refer to GI-35, "How to Check Terminal" and GI-38, "Intermittent Incident".

>> **INSPECTION END**

P0181 FTT SENSOR

Component Description

INFOID:0000000001351521

The fuel tank temperature sensor is used to detect the fuel temperature inside the fuel tank. The sensor modifies a voltage signal from the ECM. The modified signal returns to the ECM as the fuel temperature input. The sensor uses a thermistor which is sensitive to the change in temperature. The electrical resistance of the thermistor decreases as temperature increases.

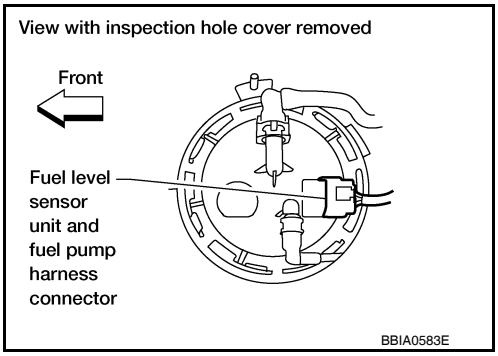

<Reference data>

Fluid temperature °C (°F)	Voltage* V	Resistance kΩ
20 (68)	3.5	2.3 - 2.7
50 (122)	2.2	0.79 - 0.90

*: This data is reference value and is measured between ECM terminal 107 (Fuel tank temperature sensor) and ground.

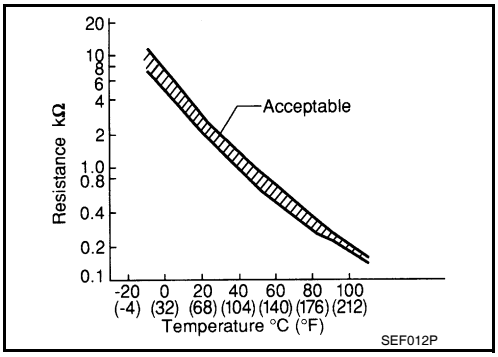

CAUTION:

Do not use ECM ground terminals when measuring input/output voltage. Doing so may result in damage to the ECM's transistor. Use a ground other than ECM terminals, such as the ground.

On Board Diagnosis Logic

INFOID:0000000001351522

DTC No.	Trouble diagnosis name	DTC detecting condition	Possible cause
P0181 0181	Fuel tank temperature sensor circuit range/performance	Rationally incorrect voltage from the sensor is sent to ECM, compared with the voltage signals from engine coolant temperature sensor and intake air temperature sensor.	• Harness or connectors (The sensor circuit is open or shorted) • Fuel tank temperature sensor

DTC Confirmation Procedure

INFOID:0000000001351523

NOTE:

If DTC Confirmation Procedure has been previously conducted, always turn ignition switch OFF and wait at least 10 seconds before conducting the next test.

WITH CONSULT-III

1. Turn ignition switch ON and wait at least 10 seconds.
2. Check 1st trip DTC.
   If 1st trip DTC is detected, go to EC-189, "Diagnosis Procedure".
   If 1st trip DTC is not detected, go to following step.
3. Select “DATA MONITOR” mode with CONSULT-III.
4. Check “COOLAN TEMP/S” value.
   If the “COOLAN TEMP/S” is less than 60°C (140°F), the result will be OK.
   If the “COOLAN TEMP/S” is above 60°C (140°F), go to the following step.
5. Cool engine down until “COOLAN TEMP/S” signal is less than 60°C (140°F).
6. Wait at least 10 seconds.
7. Check 1st trip DTC.
8. If 1st trip DTC is detected, go to EC-189, "Diagnosis Procedure".

WITH GST

Follow the procedure “WITH CONSULT-III” above.

Diagnosis Procedure

INFOID:0000000001351525

1. CHECK FUEL TANK TEMPERATURE SENSOR POWER SUPPLY CIRCUIT

1. Turn ignition switch OFF.
2. Disconnect “fuel level sensor unit and fuel pump” harness connector.
3. Turn ignition switch ON.

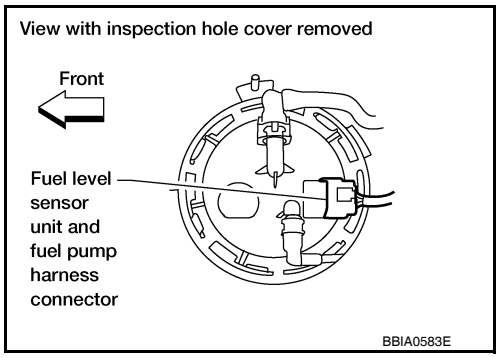

4. Check voltage between “fuel level sensor unit and fuel pump” terminal 4 and ground with CONSULT-III or tester.

Voltage: Approximately 5V

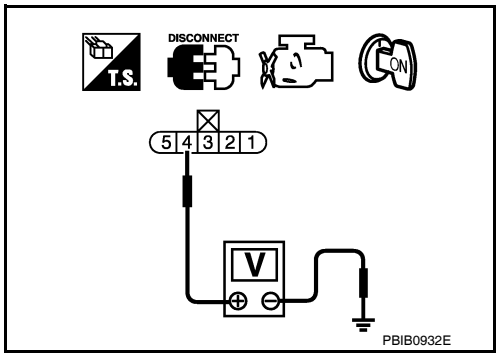

OK or NG

OK >> GO TO 3.
NG >> GO TO 2.

2. DETECT MALFUNCTIONING PART

Check the following.
- Harness connectors C1, E41
- Harness for open or short between ECM and “fuel level sensor unit and fuel pump”

>> Repair harness or connector.

3. CHECK FUEL TANK TEMPERATURE SENSOR GROUND CIRCUIT FOR OPEN AND SHORT

1. Turn ignition switch OFF.
2. Check harness continuity between “fuel level sensor unit and fuel pump” terminal 3 and ground. Refer to Wiring Diagram.

Continuity should exist.

3. Also check harness for short to power.

OK or NG

OK >> GO TO 5.
NG >> GO TO 4.

4. DETECT MALFUNCTIONING PART

Check the following.
- Harness connectors C1, E41
- Harness for open or short between “fuel level sensor unit and fuel pump” and ground

>> Repair open circuit or short to power in harness or connector.

5. CHECK FUEL TANK TEMPERATURE SENSOR

Refer to EC-190, "Component Inspection".

OK or NG

OK >> GO TO 6.
NG >> Replace “fuel level sensor unit and fuel pump”.

6. CHECK INTERMITTENT INCIDENT

Refer to GI-35, "How to Check Terminal" and GI-38, "Intermittent Incident".

>> **INSPECTION END**

Component Inspection

INFOID:0000000001351526

FUEL TANK TEMPERATURE SENSOR

1. Remove fuel level sensor unit.
2. Check resistance between “fuel level sensor unit and fuel pump” terminals 3 and 4 by heating with hot water as shown in the figure.

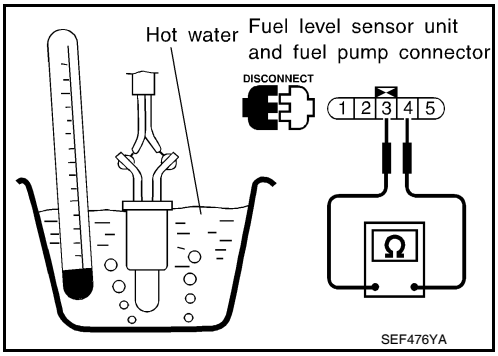

Temperature °C (°F)	Resistance kΩ
20 (68)	2.3 - 2.7
50 (122)	0.79 - 0.90

If NG, replace fuel level sensor unit.

P0182, P0183 FTT SENSOR

Component Description

INFOID:0000000001351528

The fuel tank temperature sensor is used to detect the fuel temperature inside the fuel tank. The sensor modifies a voltage signal from the ECM. The modified signal returns to the ECM as the fuel temperature input. The sensor uses a thermistor which is sensitive to the change in temperature. The electrical resistance of the thermistor decreases as temperature increases.

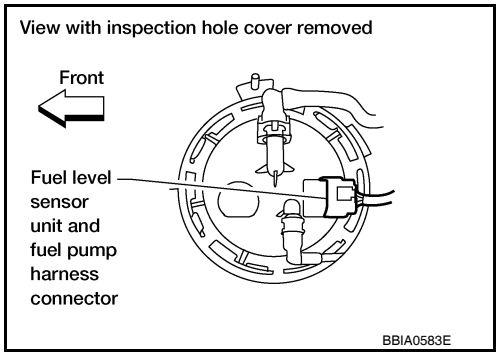

<Reference data>

Fluid temperature °C (°F)	Voltage* V	Resistance kΩ
20 (68)	3.5	2.3 - 2.7
50 (122)	2.2	0.79 - 0.90

*: This data is reference value and is measured between ECM terminal 107 (Fuel tank temperature sensor) and ground.

CAUTION:
Do not use ECM ground terminals when measuring input/output voltage. Doing so may result in damage to the ECM's transistor. Use a ground other than ECM terminals, such as the ground.

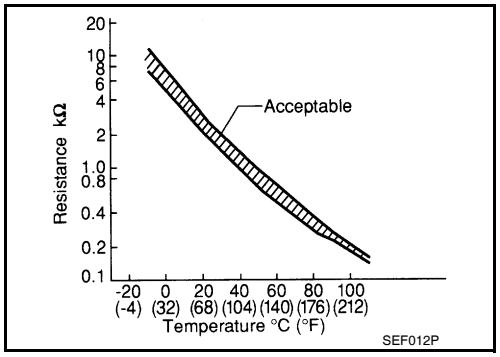

On Board Diagnosis Logic

INFOID:0000000001351529

DTC No.	Trouble diagnosis name	DTC detecting condition	Possible cause
P0182 0182	Fuel tank temperature sensor circuit low input	An excessively low voltage from the sensor is sent to ECM.	• Harness or connectors (The sensor circuit is open or shorted.) • Fuel tank temperature sensor
P0183 0183	Fuel tank temperature sensor circuit high input	An excessively high voltage from the sensor is sent to ECM.	

DTC Confirmation Procedure

INFOID:0000000001351530

NOTE:
If DTC Confirmation Procedure has been previously conducted, always turn ignition switch OFF and wait at least 10 seconds before conducting the next test.

WITH CONSULT-III

1. Wait at least 5 seconds.
2. Check 1st trip DTC.
3. If 1st trip DTC is detected, go to EC-191, "Diagnosis Procedure".

WITH GST

Follow the procedure “WITH CONSULT-III” above.

Diagnosis Procedure

INFOID:0000000001351532

1. CHECK FUEL TANK TEMPERATURE SENSOR POWER SUPPLY CIRCUIT

1. Turn ignition switch OFF.

2. Disconnect “fuel level sensor unit and fuel pump” harness connector.
3. Turn ignition switch ON.

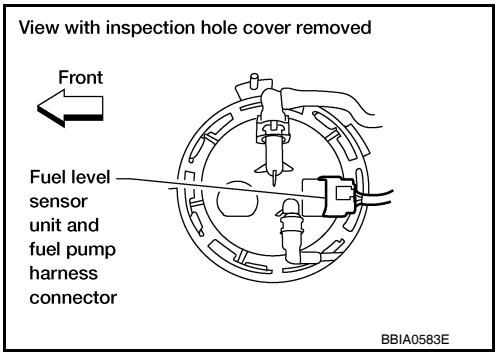

4. Check voltage between “fuel level sensor unit and fuel pump” terminal 4 and ground with CONSULT-III or tester.

Voltage: Approximately 5V

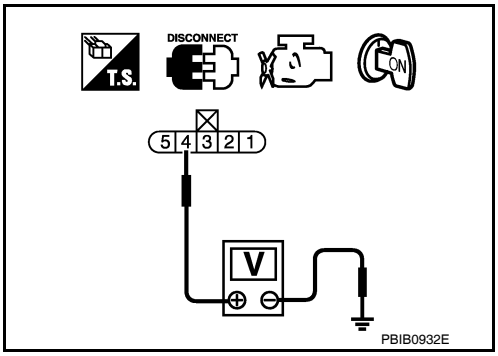

OK or NG

OK >> GO TO 3.
NG >> GO TO 2.

2. DETECT MALFUNCTIONING PART

Check the following.
- Harness connectors C1, E41
- Harness for open or short between ECM and “fuel level sensor unit and fuel pump”

>> Repair harness or connector.

3. CHECK FUEL TANK TEMPERATURE SENSOR GROUND CIRCUIT FOR OPEN AND SHORT

1. Turn ignition switch OFF.
2. Check harness continuity between “fuel level sensor unit and fuel pump” terminal 3 and ground. Refer to Wiring Diagram.

Continuity should exist.

3. Also check harness for short to power.

OK or NG

OK >> GO TO 5.
NG >> GO TO 4.

4. DETECT MALFUNCTIONING PART

Check the following.
- Harness connectors C1, E41
- Harness for open or short between “fuel level sensor unit and fuel pump” and ground

>> Repair open circuit or short to power in harness or connector.

5. CHECK FUEL TANK TEMPERATURE SENSOR

Refer to EC-193, "Component Inspection".

OK or NG

OK >> GO TO 6.
NG >> Replace “fuel level sensor unit and fuel pump”.

6. CHECK INTERMITTENT INCIDENT

Refer to GI-35, "How to Check Terminal" and GI-38, "Intermittent Incident".

>> **INSPECTION END**

Component Inspection

INFOID:0000000001351533

FUEL TANK TEMPERATURE SENSOR

1. Remove fuel level sensor unit.
2. Check resistance between “fuel level sensor unit and fuel pump” terminals 3 and 4 by heating with hot water as shown in the figure.

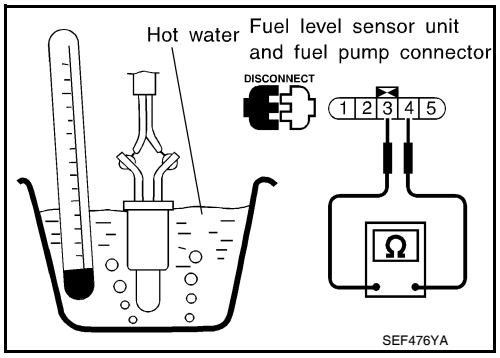

Temperature °C (°F)	Resistance kΩ
20 (68)	2.3 - 2.7
50 (122)	0.79 - 0.90

If NG, replace fuel level sensor unit.

P0222, P0223 APP SENSOR

Component Description

INFOID:0000000001351535

Electric throttle control actuator consists of throttle control motor, throttle position sensor, etc. The throttle position sensor responds to the throttle valve movement.
The throttle position sensor has the two sensors. These sensors are a kind of potentiometers which transform the throttle valve position into output voltage, and emit the voltage signal to the ECM. In addition, these sensors detect the opening and closing speed of the throttle valve and feed the voltage signals to the ECM. The ECM judges the current opening angle of the throttle valve from these signals and the ECM controls the throttle control motor to make the throttle valve opening angle properly in response to driving condition.

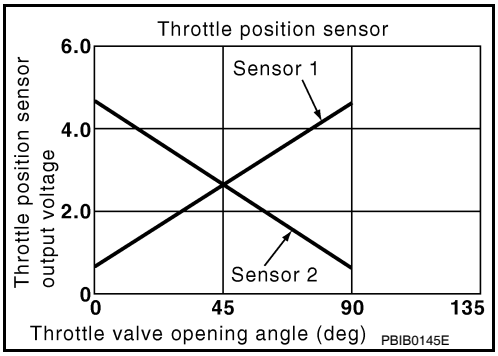

On Board Diagnosis Logic

INFOID:0000000001351537

These self-diagnoses have the one trip detection logic.

DTC No.	Trouble diagnosis name	DTC detecting condition	Possible cause
P0222 0222	Throttle position sensor 1 circuit low input	An excessively low voltage from the TP sensor 1 is sent to ECM.	• Harness or connectors (TP sensor 1 circuit is open or shorted.) (APP sensor 2 circuit is shorted.) • Electric throttle control actuator (TP sensor 1) • Accelerator pedal position sensor (APP sensor 2)
P0223 0223	Throttle position sensor 1 circuit high input	An excessively high voltage from the TP sensor 1 is sent to ECM.	

FAIL-SAFE MODE

When the malfunction is detected, ECM enters fail-safe mode and the MIL lights up.

Engine operation condition in fail-safe mode
The ECM controls the electric throttle control actuator in regulating the throttle opening in order for the idle position to be within +10 degrees. The ECM regulates the opening speed of the throttle valve to be slower than the normal condition. So, the acceleration will be poor.

DTC Confirmation Procedure

INFOID:0000000001351538

NOTE:
If DTC Confirmation Procedure has been previously conducted, always turn ignition switch OFF and wait at least 10 seconds before conducting the next test.
TESTING CONDITION:
Before performing the following procedure, confirm that battery voltage is more than 8V at idle.

WITH CONSULT-III

1. Start engine and let it idle for 1 second.
2. Check DTC.
3. If DTC is detected, go to EC-194, "Diagnosis Procedure".

WITH GST

Follow the procedure “WITH CONSULT-III” above.

Diagnosis Procedure

INFOID:0000000001351540

1. CHECK GROUND CONNECTIONS

1. Turn ignition switch OFF.
2. Loosen and retighten three ground screws on the body.

Refer to EC-86, "Ground Inspection".

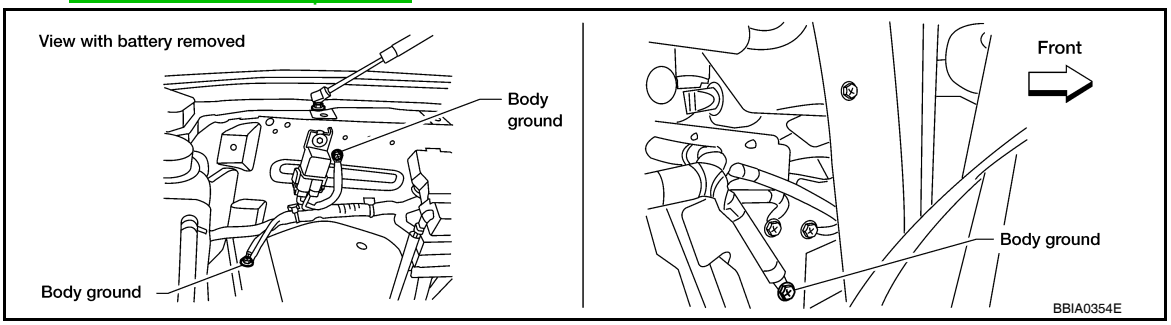

OK or NG

OK >> GO TO 2.
NG >> Repair or replace ground connections.

2. CHECK THROTTLE POSITION SENSOR 1 POWER SUPPLY CIRCUIT-I

1. Disconnect electric throttle control actuator (1) harness connector.
- Illustration shows the view with intake air duct removed.
2. Turn ignition switch ON.

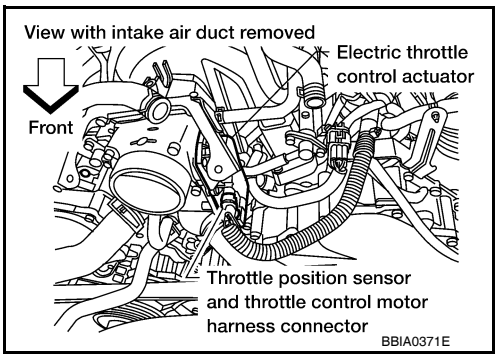

3. Check voltage between electric throttle control actuator terminal 2 and ground with CONSULT-III or tester.

Voltage: Approximately 5V

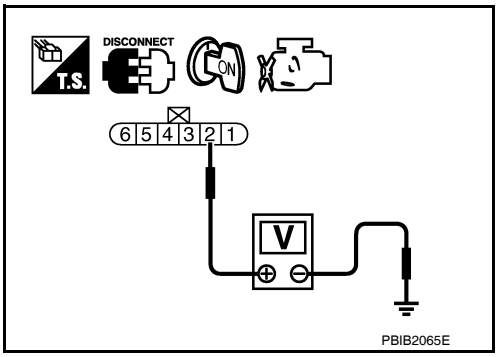

OK or NG

OK >> GO TO 7.
NG >> GO TO 3.

3. CHECK THROTTLE POSITION SENSOR 1 POWER SUPPLY CIRCUIT-II

1. Turn ignition switch OFF.
2. Disconnect ECM harness connector.
3. Check harness continuity between electric throttle control actuator terminal 2 and ECM terminal 47. Refer to Wiring Diagram.

Continuity should exist.

OK or NG

OK >> GO TO 4.
NG >> Repair open circuit.

4. CHECK THROTTLE POSITION SENSOR 1 POWER SUPPLY CIRCUIT-III

Check harness for short to power and short to ground, between the following terminals.

ECM terminal	Sensor terminal	Reference Wiring Diagram
47	Electric throttle control actuator terminal 2	EC-439, "Wiring Diagram - ENGINE CONTROL SYSTEM -"
91	APP sensor terminal 6	

OK or NG

OK >> GO TO 5.
NG >> Repair short to ground or short to power in harness or connectors.

5. CHECK ACCELERATOR PEDAL POSITION SENSOR

Refer to EC-384, "Component Inspection".

OK or NG

OK >> GO TO 11.
NG >> GO TO 6.

6. REPLACE ACCELERATOR PEDAL ASSEMBLY

1. Replace the accelerator pedal assembly.
2. Perform EC-18, "Accelerator Pedal Released Position Learning".
3. Perform EC-18, "Throttle Valve Closed Position Learning".
4. Perform EC-18, "Idle Air Volume Learning".

>> **INSPECTION END**

7. CHECK THROTTLE POSITION SENSOR 1 GROUND CIRCUIT FOR OPEN AND SHORT

1. Turn ignition switch OFF.
2. Disconnect ECM harness connector.
3. Check harness continuity between electric throttle control actuator terminal 4 and ECM terminal 66. Refer to Wiring Diagram.

Continuity should exist.

4. Also check harness for short to ground and short to power.

OK or NG

OK >> GO TO 8.
NG >> Repair open circuit or short to ground or short to power in harness or connectors.

8. CHECK THROTTLE POSITION SENSOR 1 INPUT SIGNAL CIRCUIT FOR OPEN AND SHORT

1. Check harness continuity between ECM terminal 50 and electric throttle control actuator terminal 1. Refer to Wiring Diagram.

Continuity should exist.

2. Also check harness for short to ground and short to power.

OK or NG

OK >> GO TO 9.
NG >> Repair open circuit or short to ground or short to power in harness or connectors.

9. CHECK THROTTLE POSITION SENSOR

Refer to EC-197, "Component Inspection".

OK or NG

OK >> GO TO 11.
NG >> GO TO 10.

10. REPLACE ELECTRIC THROTTLE CONTROL ACTUATOR

1. Replace the electric throttle control actuator.
2. Perform EC-18, "Throttle Valve Closed Position Learning".
3. Perform EC-18, "Idle Air Volume Learning".

>> **INSPECTION END**

11. CHECK INTERMITTENT INCIDENT

Refer to GI-35, "How to Check Terminal" and GI-38, "Intermittent Incident".

>> **INSPECTION END**

Component Inspection

INFOID:0000000001351541

THROTTLE POSITION SENSOR

1. Reconnect all harness connectors disconnected.
2. Perform EC-18, "Throttle Valve Closed Position Learning".
3. Turn ignition switch ON.
4. Set selector lever to D position.
5. Check voltage between ECM terminals 50 (TP sensor 1 signal), 69 (TP sensor 2 signal) and ground under the following conditions.

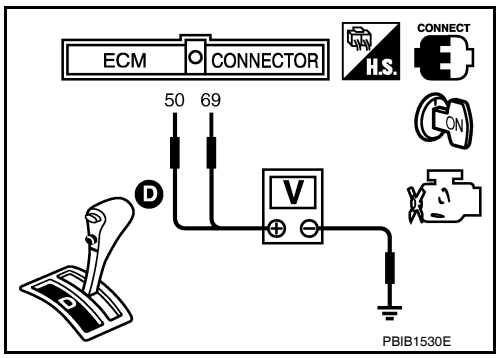

Terminal	Accelerator pedal	Voltage
50 (Throttle position sensor 1)	Fully released	More than 0.36V
	Fully depressed	Less than 4.75V
69 (Throttle position sensor 2)	Fully released	Less than 4.75V
	Fully depressed	More than 0.36V

6. If NG, replace electric throttle control actuator and go to the next step.
7. Perform EC-18, "Throttle Valve Closed Position Learning".
8. Perform EC-18, "Idle Air Volume Learning".

P0300, P0301, P0302, P0303, P0304, P0305, P0306, P0307, P0308 MISFIRE

On Board Diagnosis Logic

INFOID:0000000001351543

When a misfire occurs, engine speed will fluctuate. If the engine speed fluctuates enough to cause the crankshaft position (CKP) sensor (POS) signal to vary, ECM can determine that a misfire is occurring.

Sensor	Input signal to ECM	ECM function
Crankshaft position sensor (POS)	Engine speed	On board diagnosis of misfire

The misfire detection logic consists of the following two conditions.

1. One Trip Detection Logic (Three Way Catalyst Damage)
   On the 1st trip that a misfire condition occurs that can damage the three way catalyst (TWC) due to overheating, the MIL will blink.
   When a misfire condition occurs, the ECM monitors the CKP sensor signal every 200 engine revolutions for a change.
   When the misfire condition decreases to a level that will not damage the TWC, the MIL will turn off.
   If another misfire condition occurs that can damage the TWC on a second trip, the MIL will blink.
   When the misfire condition decreases to a level that will not damage the TWC, the MIL will remain on.
   If another misfire condition occurs that can damage the TWC, the MIL will begin to blink again.
2. Two Trip Detection Logic (Exhaust quality deterioration)
   For misfire conditions that will not damage the TWC (but will affect vehicle emissions), the MIL will only light when the misfire is detected on a second trip. During this condition, the ECM monitors the CKP sensor signal every 1,000 engine revolutions.
   A misfire malfunction can be detected on any one cylinder or on multiple cylinders.

DTC No.	Trouble diagnosis name	DTC detecting condition	Possible cause
P0300 0300	Multiple cylinder misfire detected	Multiple cylinder misfire.	• Improper spark plug • Insufficient compression • Incorrect fuel pressure • The injector circuit is open or shorted • Fuel injector • Intake air leak • The ignition signal circuit is open or shorted • Lack of fuel • Signal plate • Air fuel ratio (A/F) sensor 1 • Incorrect PCV hose connection
P0301 0301	No.1 cylinder misfire detected	No. 1 cylinder misfires.	
P0302 0302	No. 2 cylinder misfire detected	No. 2 cylinder misfires.	
P0303 0303	No. 3 cylinder misfire detected	No. 3 cylinder misfires.	
P0304 0304	No. 4 cylinder misfire detected	No. 4 cylinder misfires.	
P0305 0305	No. 5 cylinder misfire detected	No. 5 cylinder misfires.	
P0306 0306	No. 6 cylinder misfire detected	No. 6 cylinder misfires.	
P0307 0307	No. 7 cylinder misfire detected	No. 7 cylinder misfires.	
P0308 0308	No. 8 cylinder misfire detected	No. 8 cylinder misfires.	

DTC Confirmation Procedure

INFOID:0000000001351544

CAUTION:
Always drive vehicle in safe manner according to traffic conditions and obey all traffic laws when driving.
NOTE:
If DTC Confirmation Procedure has been previously conducted, always turn ignition switch OFF and wait at least 10 seconds before conducting the next test.

WITH CONSULT-III

1. Start engine and warm it up to normal operating temperature.
2. Turn ignition switch OFF and wait at least 10 seconds.
3. Restart engine and let it idle for about 15 minutes.
4. Check 1st trip DTC.
5. If 1st trip DTC is detected, go to EC-199, "Diagnosis Procedure".
   NOTE:
   If 1st trip DTC is not detected during above procedure, performing the following procedure is advised.

a. Turn ignition switch OFF and wait at least 10 seconds.
b. Start engine and drive the vehicle under the similar conditions to (1st trip) Freeze Frame Data for a certain time. Refer to the table below.
   Hold the accelerator pedal as steady as possible.

   The similar conditions to (1st trip) Freeze Frame Data means the vehicle operation that the following conditions should be satisfied at the same time.

Engine speed	Engine speed in the freeze frame data ± 400 rpm
Vehicle speed	Vehicle speed in the freeze frame data ± 10 km/h (6 MPH)
Engine coolant temperature (T) condition	When the freeze frame data shows lower than 70 °C (158 °F), T should be lower than 70 °C (158 °F).
	When the freeze frame data shows higher than or equal to 70 °C (158 °F), T should be higher than or equal to 70 °C (158 °F).

The time to driving varies according to the engine speed in the freeze frame data.

Engine speed	Time
Around 1,000 rpm	Approximately 10 minutes
Around 2,000 rpm	Approximately 5 minutes
More than 3,000 rpm	Approximately 3.5 minutes

WITH GST
Follow the procedure “WITH CONSULT-III” above.

Diagnosis Procedure

INFOID:0000000001351545

1. CHECK FOR INTAKE AIR LEAK AND PCV HOSE

1. Start engine and run it at idle speed.
2. Listen for the sound of the intake air leak.
3. Check PCV hose connection.

OK or NG

OK >> GO TO 2.
NG >> Discover air leak location and repair.

2. CHECK FOR EXHAUST SYSTEM CLOGGING

Stop engine and visually check exhaust tube, three way catalyst and muffler for dents.

OK or NG

OK >> GO TO 3.
NG >> Repair or replace it.

3. PERFORM POWER BALANCE TEST

With CONSULT-III

1. Perform “POWER BALANCE” in “ACTIVE TEST” mode.
2. Is there any cylinder which does not produce a momentary engine speed drop?

Without CONSULT-III

When disconnecting each fuel injector harness connector one at a time, is there any cylinder which does not produce a momentary engine speed drop?

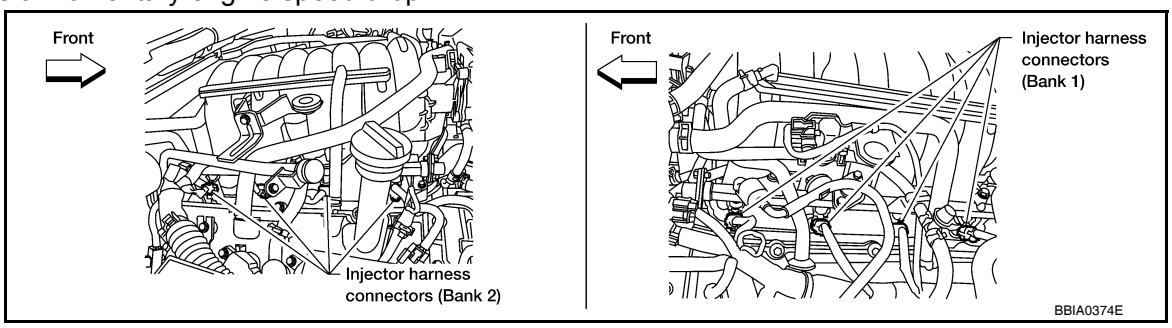

Yes or No

Yes >> GO TO 4.
No >> GO TO 7.

4. CHECK FUEL INJECTOR

Does each fuel injector make an operating sound at idle?

Yes or No

Yes >> GO TO 5.
No >> Check fuel injector(s) and circuit(s). Refer to EC-399, "Diagnosis Procedure".

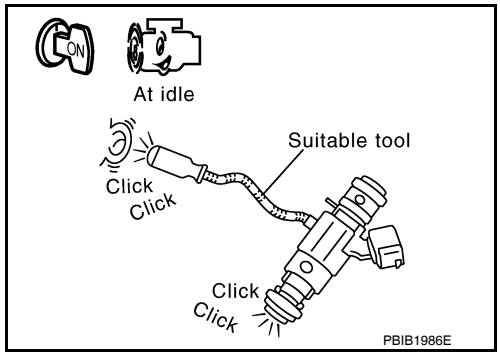

5. CHECK FUNCTION OF IGNITION COIL-I

CAUTION:

Do the following procedure in the place where ventilation is good without the combustible.

1. Turn ignition switch OFF.
2. Remove fuel pump fuse in IPDM E/R to release fuel pressure.
   NOTE:
   Do not use CONSULT-III to release fuel pressure, or fuel pressure applies again during the following procedure.
3. Start engine.
4. After engine stalls, crank it two or three times to release all fuel pressure.
5. Turn ignition switch OFF.
6. Remove all ignition coil harness connectors to avoid the electrical discharge from the ignition coils.
7. Remove ignition coil and spark plug of the cylinder to be checked.
8. Crank engine for 5 seconds or more to remove combustion gas in the cylinder.
9. Connect spark plug and harness connector to ignition coil.
10. Fix ignition coil using a rope etc. with gap of 13 - 17 mm between the edge of the spark plug and grounded metal portion as shown in the figure.
11. Crank engine for about 3 seconds, and check whether spark is generated between the spark plug and the grounded metal portion.

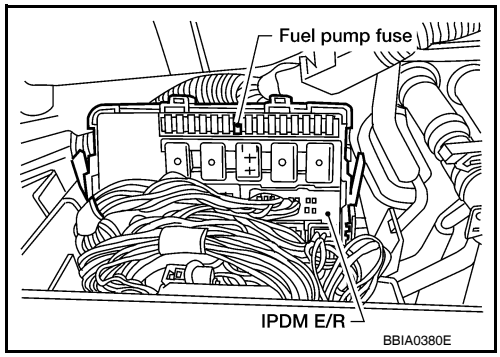

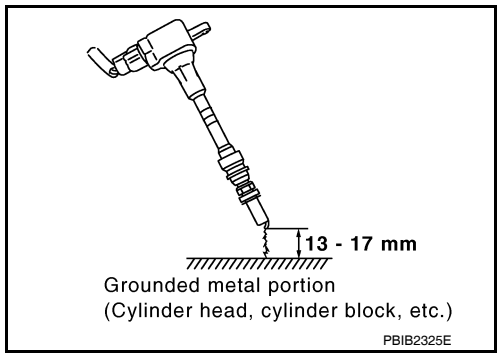

Spark should be generated.

CAUTION:

- **Do not approach to the spark plug and the ignition coil within 50cm. Be careful not to get an electrical shock while checking, because the electrical discharge voltage becomes 20kV or more.**
- **It might cause to damage the ignition coil if the gap of more than 17 mm is taken.**

NOTE:
When the gap is less than 13 mm, the spark might be generated even if the coil is malfunctioning.

OK or NG

OK >> GO TO 9.
NG >> GO TO 6.

6. CHECK FUNCTION OF IGNITION COIL-II

1. Turn ignition switch OFF.
2. Disconnect spark plug and connect a known-good spark plug.
3. Crank engine for about 3 seconds, and recheck whether spark is generated between the spark plug and the grounded metal portion.

Spark should be generated.

OK or NG

OK >> GO TO 7.
NG >> Check ignition coil, power transistor and their circuits. Refer to EC-411, "Diagnosis Procedure" .

7. CHECK SPARK PLUG

Check the initial spark plug for fouling, etc.

OK or NG

OK >> Replace malfunctioning spark plug(s) with standard type one(s). For spark plug type, refer to EM-16, "Removal and Installation".
NG >> 1. Repair or clean spark plug.
2. GO TO 8.

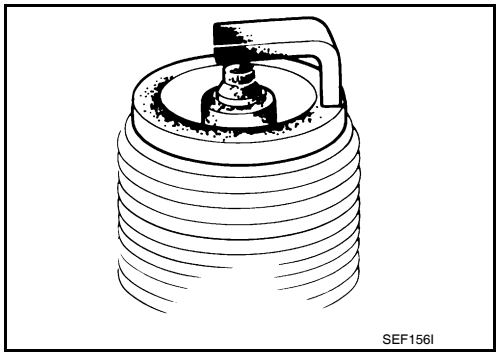

8. CHECK FUNCTION OF IGNITION COIL-III

1. Reconnect the initial spark plugs.
2. Crank engine for about 3 seconds, and recheck whether spark is generated between the spark plug and the grounded portion.

Spark should be generated.

OK or NG

OK >> **INSPECTION END**
NG >> Replace malfunctioning spark plug(s) with standard type one(s). For spark plug type, refer to EM-16, "Removal and Installation".

9. CHECK COMPRESSION PRESSURE

Check compression pressure. Refer to EM-23, "Checking Compression Pressure".

OK or NG

OK >> GO TO 10.
NG >> Check pistons, piston rings, valves, valve seats and cylinder head gaskets.

10. CHECK FUEL PRESSURE

1. Install all removed parts.
2. Release fuel pressure to zero. Refer to EC-494, "Fuel Pressure Check".
3. Install fuel pressure gauge and check fuel pressure. Refer to EC-494, "Fuel Pressure Check".

At idling: Approximately 350 kPa (3.57 kg/cm^2 , 51 psi)

OK or NG

OK >> GO TO 12.
NG >> GO TO 11.

11. DETECT MALFUNCTIONING PART

Check the following.
- Fuel pump and circuit (Refer to EC-402, "Diagnosis Procedure".)
- Fuel pressure regulator (Refer to EC-494, "Fuel Pressure Check".)
- Fuel lines
- Fuel filter for clogging

>> Repair or replace.

12. CHECK IGNITION TIMING

Check the following items. Refer to EC-13, "Basic Inspection".

Items	Specifications
Target idle speed	650 ± 50 rpm (in P or N position)
Ignition timing	15 ± 5° BTDC (in P or N position)

OK or NG

OK >> GO TO 13.
NG >> Follow the EC-13, "Basic Inspection".

13. CHECK A/F SENSOR 1 INPUT SIGNAL

1. Turn ignition switch OFF.
2. Disconnect A/F sensor 1 harness connector.

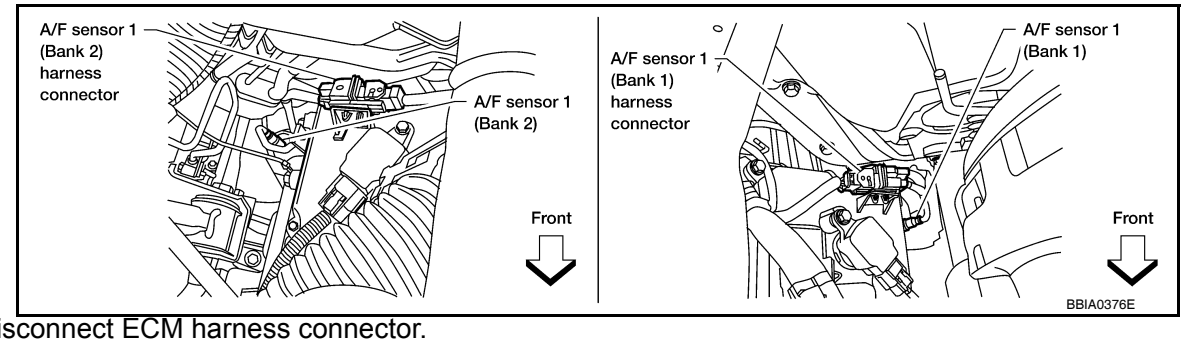

3. Disconnect ECM harness connector.
4. Check harness continuity between the following terminals.
   Refer to Wiring Diagram.

	A/F sensor 1 terminal	ECM terminal
Bank 1	1	35
	2	56
Bank 2	1	16
	2	75

Continuity should exist.

5. Check harness continuity between the following terminals and ground.
   Refer to Wiring Diagram.

Bank 1		Bank 2	
A/F sensor 1 terminal	ECM terminal	A/F sensor 1 terminal	ECM terminal
1	35	1	16
2	56	2	75

Continuity should not exist.

6. Also check harness for short to power.

OK or NG

OK >> GO TO 14.
NG >> Repair open circuit or short to ground or short to power in harness or connectors.

14. CHECK A/F SENSOR 1 HEATER

Refer to EC-99, "Component Inspection".

OK or NG

OK >> GO TO 16.
NG >> GO TO 15.

15. REPLACE AIR FUEL RATIO (A/F) SENSOR 1

Replace malfunctioning air fuel ratio (A/F) sensor 1.

CAUTION:

- **Discard any air fuel ratio (A/F) sensor which has been dropped from a height of more than 0.5 m (19.7 in) onto a hard surface such as a concrete floor; use a new one.**
- **Before installing new air fuel ratio (A/F) sensor, clean exhaust system threads (using Oxygen Sensor Thread Cleaner tool J-43897-18 or J-43897-12) and approved anti-seize lubricant.**

>> **INSPECTION END**

16. CHECK MASS AIR FLOW SENSOR

With CONSULT-III

Check mass air flow sensor signal in “DATA MONITOR” mode with CONSULT-III.

3.0 - 9.0 g·m/sec: at idling
9.0 - 28.0 g·m/sec: at 2,500 rpm

With GST

Check mass air flow sensor signal in Service $01 with GST.

3.0 - 9.0 g·m/sec: at idling
9.0 - 28.0 g·m/sec: at 2,500 rpm

OK or NG

OK >> GO TO 17.
NG >> Check connectors for rusted terminals or loose connections in the mass air flow sensor circuit or ground. Refer to EC-106.

17. CHECK SYMPTOM MATRIX CHART

Check items on the rough idle symptom in EC-481, "Symptom Matrix Chart".

OK or NG

OK >> GO TO 18.
NG >> Repair or replace.

18. ERASE THE 1ST TRIP DTC

Some tests may cause a 1st trip DTC to be set.
Erase the 1st trip DTC from the ECM memory after performing the tests. Refer to EC-462, "DTC Index".

>> GO TO 19.

19. CHECK INTERMITTENT INCIDENT

Refer to GI-35, "How to Check Terminal" and GI-38, "Intermittent Incident".

>> **INSPECTION END**

P0327, P0328, P0332, P0333 KS

Component Description

INFOID:0000000001351546

The knock sensor is attached to the cylinder block. It senses engine knocking using a piezoelectric element. A knocking vibration from the cylinder block is sensed as vibrational pressure. This pressure is converted into a voltage signal and sent to the ECM.

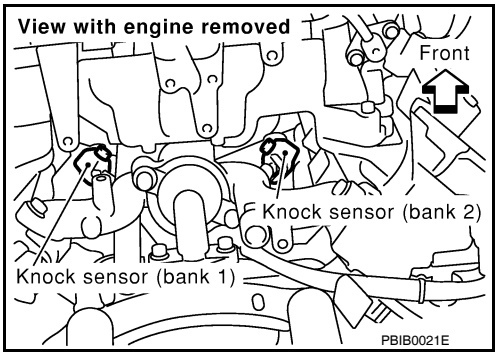

On Board Diagnosis Logic

INFOID:0000000001351547

The MIL will not light up for these self-diagnoses.

DTC No.	Trouble diagnosis name	DTC detecting condition	Possible cause
P0327 0327 (bank 1)	Knock sensor circuit low input	An excessively low voltage from the sensor is sent to ECM.	• Harness or connectors (The sensor circuit is open or shorted.) • Knock sensor
P0332 0332 (bank 2)			
P0328 0328 (bank 1)	Knock sensor circuit high input	An excessively high voltage from the sensor is sent to ECM.	
P0333 0333 (bank 2)			

DTC Confirmation Procedure

INFOID:0000000001351548

NOTE:
If DTC Confirmation Procedure has been previously conducted, always turn ignition switch OFF and wait at least 10 seconds before conducting the next test.
TESTING CONDITION:
Before performing the following procedure, confirm that battery voltage is more than 10V at idle.

WITH CONSULT-III

1. Start engine and run it for at least 5 seconds at idle speed.
2. Check 1st trip DTC.
3. If 1st trip DTC is detected, go to EC-204, "Diagnosis Procedure"

With GST

Follow the procedure “WITH CONSULT-III” above.

Diagnosis Procedure

INFOID:0000000001351550

1. CHECK KNOCK SENSOR INPUT SIGNAL CIRCUIT FOR OPEN AND SHORT-I

1. Turn ignition switch OFF.
2. Disconnect ECM harness connector.
3. Check resistance between ECM terminals 15, 36 and ground. Refer to Wiring Diagram.
   NOTE:
   It is necessary to use an ohmmeter which can measure more than 10 MΩ.

Resistance: Approximately 532 - 588 kΩ [at 20°C (68°F)]

4. Also check harness for short to ground and short to power.

OK or NG

OK >> GO TO 5.
NG >> GO TO 2.

2. CHECK KNOCK SENSOR INPUT SIGNAL CIRCUIT FOR OPEN AND SHORT-II

1. Disconnect knock sensor harness connector.
2. Check harness continuity between ECM terminal 15 and knock sensor (bank1) terminal 1, ECM terminal 36 and knock sensor (bank 2) terminal 1.
   Refer to Wiring Diagram.

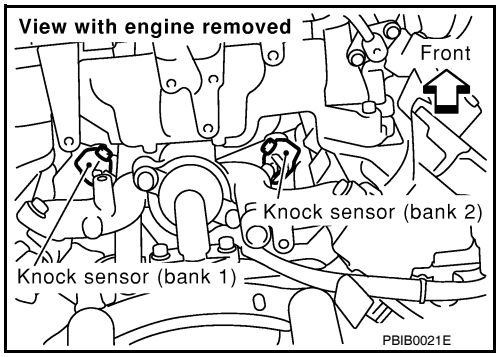

Continuity should exist.

3. Also check harness for short to ground and short to power.

OK or NG

OK >> GO TO 4.
NG >> GO TO 3.

3. DETECT MALFUNCTIONING PART

Check the following.
- Harness connectors F26, F101
- Harness for open or short between ECM and knock sensor

>> Repair open circuit or short to ground or short to power in harness or connectors.

4. CHECK KNOCK SENSOR

Refer to EC-206, "Component Inspection".

OK or NG

OK >> GO TO 5.
NG >> Replace malfunctioning knock sensor.

5. CHECK GROUND CONNECTIONS

Loosen and retighten three ground screws on the body.
Refer to EC-86, "Ground Inspection".

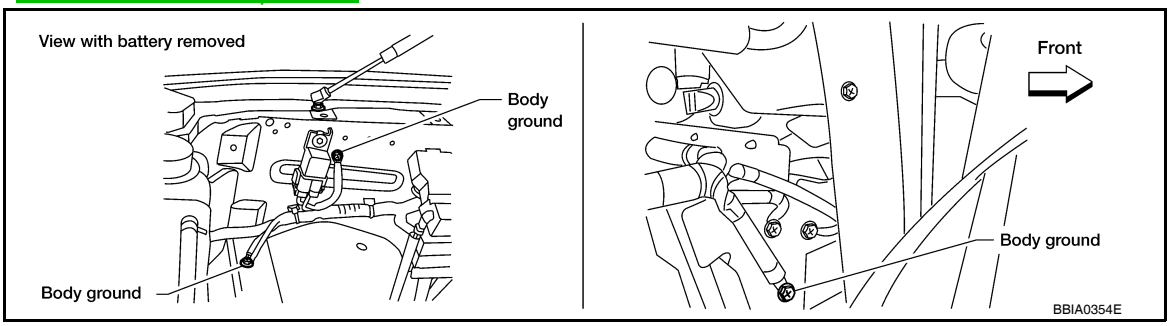

OK or NG

OK >> GO TO 6.
NG >> Repair or replace ground connections.

6. CHECK KNOCK SENSOR SHIELD CIRCUIT FOR OPEN AND SHORT

1. Disconnect knock sensor harness connector.
2. Check harness continuity between knock sensor terminal 2 and ground. Refer to Wiring Diagram.

Continuity should exist.

3. Also check harness for short to power.

OK or NG

OK >> GO TO 8.
NG >> GO TO 7.

7. DETECT MALFUNCTIONING PART

Check the following.
- Harness connectors F26, F101
- Harness connectors F14, E5
- Harness for open or short between knock sensor terminal 2 and ground

>> Repair open circuit or short power in harness or connectors.

8. CHECK INTERMITTENT INCIDENT

Refer to GI-35, "How to Check Terminal" and GI-38, "Intermittent Incident".

>> **INSPECTION END**

Component Inspection

INFOID:0000000001351551

KNOCK SENSOR

Check resistance between knock sensor terminal 1 and ground.

NOTE:
It is necessary to use an ohmmeter which can measure more than 10 MΩ.

Resistance: Approximately 532 - 588 kΩ [at 20°C (68°F)]

CAUTION:
Do not use any knock sensors that have been dropped or physically damaged. Use only new ones.

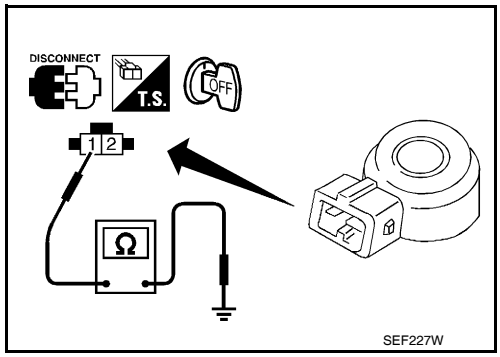

P0335 CKP SENSOR (POS)

Component Description

INFOID:0000000001351553

The crankshaft position sensor (POS) is located on the A/T assembly facing the gear teeth (cogs) of the signal plate. It detects the fluctuation of the engine revolution.
The sensor consists of a permanent magnet and Hall IC.
When the engine is running, the high and low parts of the teeth cause the gap with the sensor to change.
The changing gap causes the magnetic field near the sensor to change.
Due to the changing magnetic field, the voltage from the sensor changes.
The ECM receives the voltage signal and detects the fluctuation of the engine revolution.
ECM receives the signals as shown in the figure.

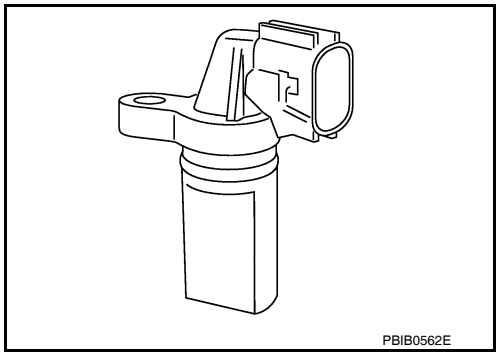

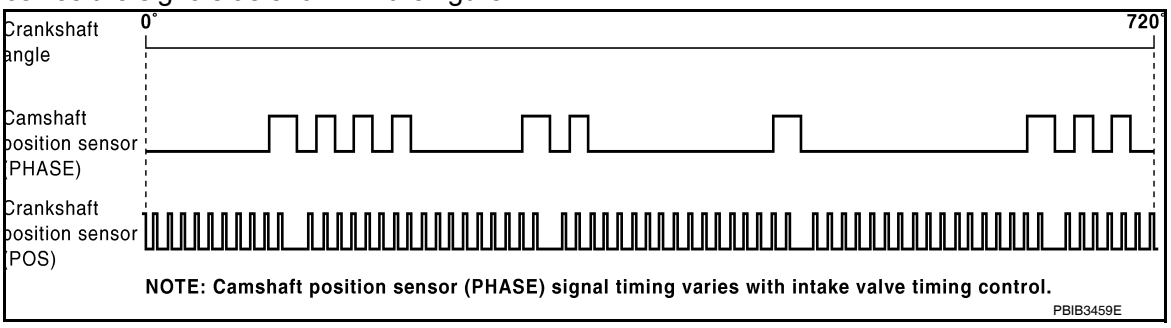

On Board Diagnosis Logic

INFOID:0000000001351555

DTC No.	Trouble diagnosis name	DTC detecting condition	Possible cause
P0335 0335	Crankshaft position sensor (POS) circuit	• The crankshaft position sensor (POS) signal is not detected by the ECM during the first few seconds of engine cranking. • The proper pulse signal from the crankshaft position sensor (POS) is not sent to ECM while the engine is running. • The crankshaft position sensor (POS) signal is not in the normal pattern during engine running.	• Harness or connectors (The sensor circuit is open or shorted) • Crankshaft position sensor (POS) • Signal plate

DTC Confirmation Procedure

INFOID:0000000001351556

NOTE:
If DTC Confirmation Procedure has been previously conducted, always turn ignition switch OFF and wait at least 10 seconds before conducting the next test.
TESTING CONDITION:
Before performing the following procedure, confirm that battery voltage is more than 10.5V with ignition switch ON.

WITH CONSULT-III

1. Crank engine for at least 2 seconds and run it for at least 5 seconds at idle speed.
2. Check 1st trip DTC.
3. If 1st trip DTC is detected, go to EC-208, "Diagnosis Procedure".

WITH GST

Follow the procedure “WITH CONSULT-III” above.

Diagnosis Procedure

INFOID:0000000001351558

1. CHECK GROUND CONNECTIONS

1. Turn ignition switch OFF.
2. Loosen and retighten three ground screws on the body.
   Refer to EC-86, "Ground Inspection".

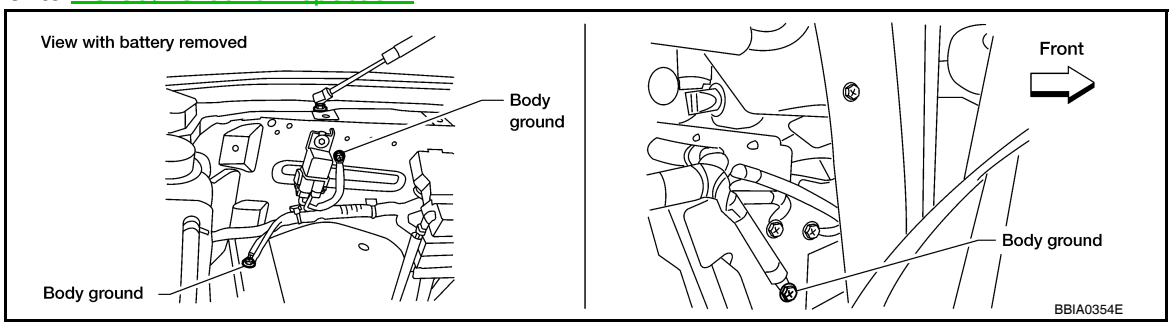

OK or NG

OK >> GO TO 2.
NG >> Repair or replace ground connections.

2. CHECK CRANKSHAFT POSITION (CKP) SENSOR (POS) POWER SUPPLY CIRCUIT

1. Disconnect crankshaft position (CKP) sensor (POS) harness connector.
2. Turn ignition switch ON.

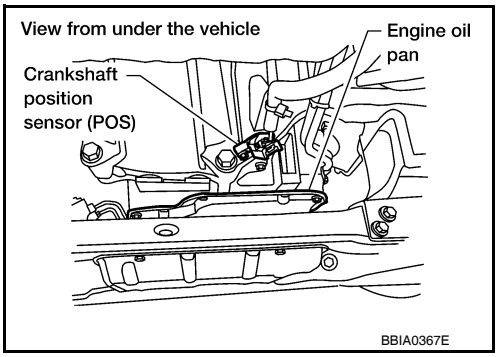

3. Check voltage between CKP sensor (POS) terminal 3 and ground with CONSULT-III or tester.

Voltage: Battery voltage

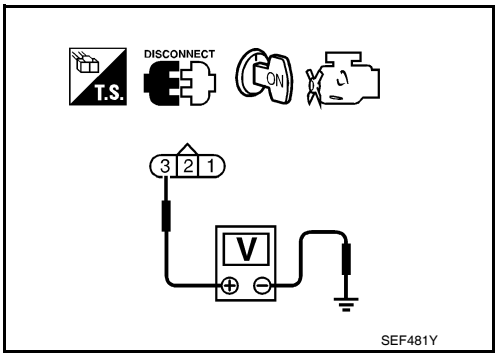

OK or NG

OK >> GO TO 4.
NG >> GO TO 3.

3. DETECT MALFUNCTIONING PART

Check the following.
- Harness connectors F32, E2
- Harness for open or short between crankshaft position sensor (POS) and ECM
- Harness for open or short between crankshaft position sensor (POS) and IPDM E/R

>> Repair open circuit or short to ground or short to power in harness or connectors.

4. CHECK CKP SENSOR (POS) GROUND CIRCUIT FOR OPEN AND SHORT

1. Turn ignition switch OFF.
2. Check harness continuity between CKP sensor (POS) terminal 1 and ground.
   Refer to Wiring Diagram.

Continuity should exist.

3. Also check harness for short to power.

OK or NG

OK >> GO TO 6.
NG >> GO TO 5.

5. DETECT MALFUNCTIONING PART

Check the following.
- Harness connectors F32, E2
- Harness for open or short between crankshaft position sensor (POS) and ground

>> Repair open circuit or short to power in harness or connectors.

6. CHECK CKP SENSOR (POS) INPUT SIGNAL CIRCUIT FOR OPEN AND SHORT

1. Disconnect ECM harness connector.
2. Check harness continuity between ECM terminal 13 and CKP sensor (POS) terminal 2. Refer to Wiring Diagram.

Continuity should exist.

3. Also check harness for short to ground and short to power.

OK or NG

OK >> GO TO 7.
NG >> Repair open circuit or short to ground or short to power in harness or connectors.

7. CHECK CRANKSHAFT POSITION SENSOR (POS)

Refer to EC-209, "Component Inspection".

OK or NG

OK >> GO TO 8.
NG >> Replace crankshaft position sensor (POS).

8. CHECK GEAR TOOTH

Visually check for chipping signal plate gear tooth.

OK or NG

OK >> GO TO 9.
NG >> Replace the signal plate.

9. CHECK INTERMITTENT INCIDENT

Refer to GI-35, "How to Check Terminal" and GI-38, "Intermittent Incident".

>> **INSPECTION END**

Component Inspection

INFOID:0000000001351559

CRANKSHAFT POSITION SENSOR (POS)

1. Loosen the fixing bolt of the sensor.
2. Disconnect crankshaft position sensor (POS) harness connector.
3. Remove the sensor.

4. Visually check the sensor for chipping.

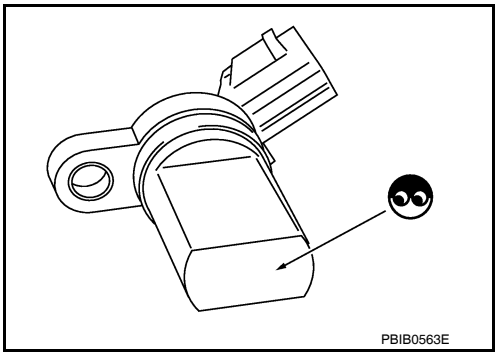

5. Check resistance as shown in the figure.

Terminal No. (Polarity)	Resistance Ω [at 25°C (77°F)]
1 (+) - 2 (-)	Except 0 or ∞
1 (+) - 3 (-)	
2 (+) - 3 (-)	

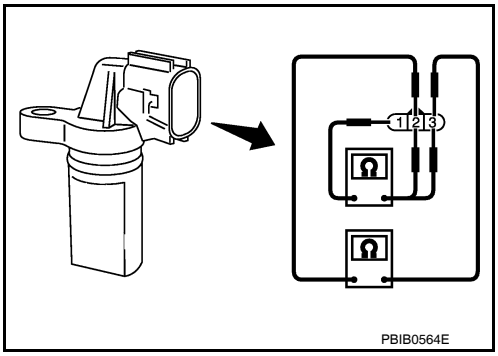

P0340 CMP SENSOR (PHASE)

Component Description

INFOID:0000000001351561

The camshaft position sensor (PHASE) senses the protrusion of exhaust valve cam sprocket to identify a particular cylinder. The camshaft position sensor (PHASE) senses the piston position.
When the crankshaft position sensor (POS) system becomes inoperative, the camshaft position sensor (PHASE) provides various controls of engine parts instead, utilizing timing of cylinder identification signals.
The sensor consists of a permanent magnet and Hall IC.
When engine is running, the high and low parts of the teeth cause the gap with the sensor to change.
The changing gap causes the magnetic field near the sensor to change.

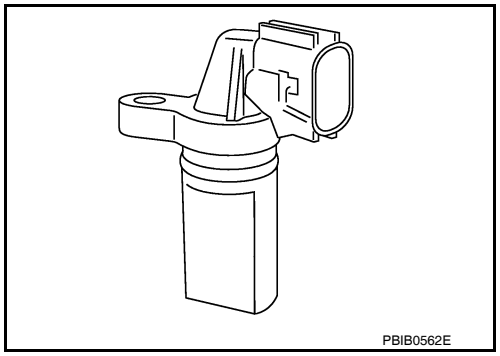

Due to the changing magnetic field, the voltage from the sensor changes.
ECM receives the signals as shown in the figure.

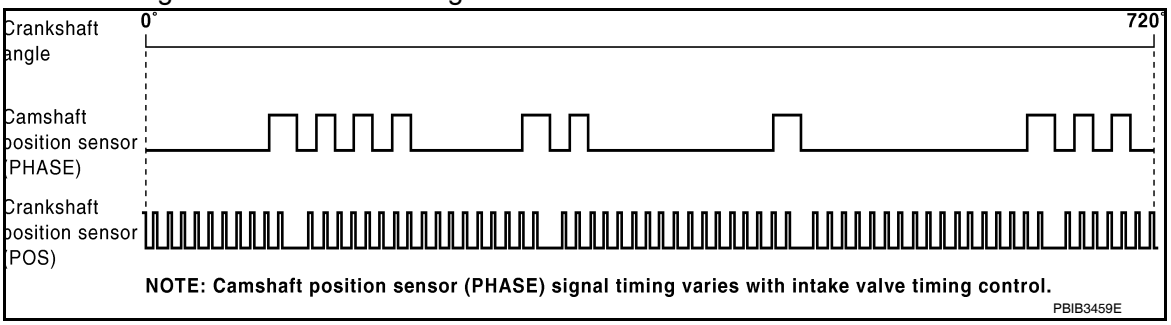

On Board Diagnosis Logic

INFOID:0000000001351562

DTC No.	Trouble diagnosis name	DTC detecting condition	Possible cause
P0340 0340	Camshaft position sensor (PHASE) circuit	• The cylinder No. signal is not sent to ECM for the first few seconds during engine cranking. • The cylinder No. signal is not sent to ECM during engine running. • The cylinder No. signal is not in the normal pattern during engine running.	• Harness or connectors (The sensor circuit is open or shorted) • Camshaft position sensor (PHASE) • Camshaft (Exhaust) • Starter motor (Refer to STR-17.) • Starting system circuit (Refer to STR-17.) • Dead (Weak) battery

DTC Confirmation Procedure

INFOID:0000000001351563

NOTE:
If DTC Confirmation Procedure has been previously conducted, always turn ignition switch OFF and wait at least 10 seconds before conducting the next test.
TESTING CONDITION:
Before performing the following procedure, confirm that battery voltage is more than 10.5V with ignition switch ON.

WITH CONSULT-III

1. Turn ignition switch ON.
2. Crank engine for at least 2 seconds and run it for at least 5 seconds at idle speed.
3. Check 1st trip DTC.
4. If 1st trip DTC is detected, go to EC-212, "Diagnosis Procedure".
   If 1st trip DTC is not detected, go to next step.
5. Maintaining engine speed at more than 800 rpm for at least 5 seconds.
6. Check 1st trip DTC.
7. If 1st trip DTC is detected, go to EC-212, "Diagnosis Procedure".

WITH GST

Follow the procedure “WITH CONSULT-III” above.

Diagnosis Procedure

INFOID:0000000001351565

1. CHECK STARTING SYSTEM

Turn ignition switch to START position.

Does the engine turn over?

Does the starter motor operate?

Yes or No

Yes >> GO TO 2.

No >> Check starting system. (Refer to STR-17.)

2. CHECK GROUND CONNECTIONS

1. Turn ignition switch OFF.
2. Loosen and retighten three ground screws on the body. Refer to EC-86, "Ground Inspection".

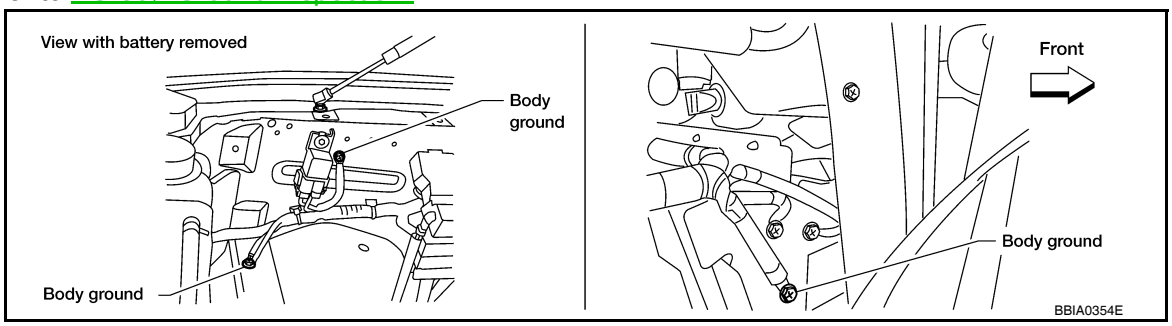

OK or NG

OK >> GO TO 3.

NG >> Repair or replace ground connections.

3. CHECK CAMSHAFT POSITION (CMP) SENSOR (PHASE) POWER SUPPLY CIRCUIT

1. Disconnect camshaft position (CMP) sensor (PHASE) (2) harness connector.
- Radiator hose (1)
2. Turn ignition switch ON.

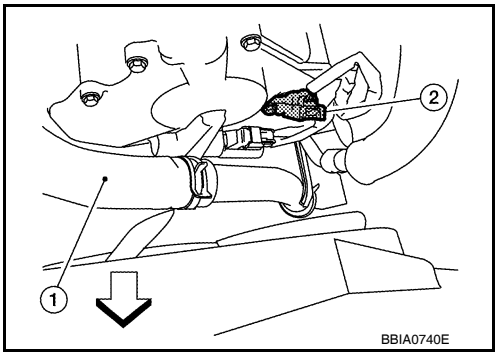

3. Check voltage between CMP sensor (PHASE) terminal 3 and ground with CONSULT-III or tester.

Voltage: Battery voltage

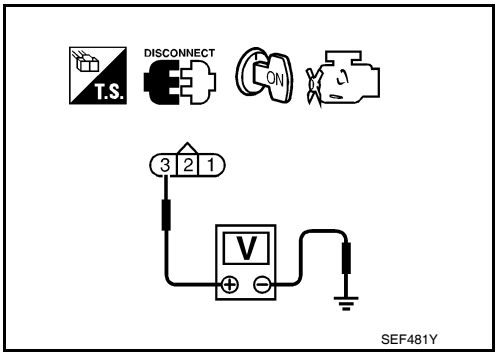

OK or NG

OK >> GO TO 5.

NG >> GO TO 4.

4. DETECT MALFUNCTIONING PART

Check the following.
- Harness connectors F32, E2
- Harness for open or short between camshaft position sensor (PHASE) and ECM
- Harness for open or short between camshaft position sensor (PHASE) and IPDM E/R

>> Repair open circuit or short to ground or short to power in harness or connectors.

5. CHECK CMP SENSOR (PHASE) GROUND CIRCUIT FOR OPEN AND SHORT

1. Turn ignition switch OFF.
2. Check harness continuity between CMP sensor (PHASE) terminal 1 and ground.
   Refer to wiring Diagram.

Continuity should exist.

3. Also check harness for short to power.

OK or NG

OK >> GO TO 7.
NG >> GO TO 6.

6. DETECT MALFUNCTIONING PART

Check the following.
- Harness connectors F32, E2
- Harness for open or short between CMP sensor (PHASE) and ground

>> Repair open circuit or short to power in harness or connectors.

7. CHECK CMP SENSOR (PHASE) INPUT SIGNAL CIRCUIT FOR OPEN AND SHORT

1. Disconnect ECM harness connector.
2. Check harness continuity between ECM terminal 14 and CMP sensor (PHASE) terminal 2.
   Refer to Wiring Diagram.

Continuity should exist.

3. Also check harness for short to ground and short to power.

OK or NG

OK >> GO TO 8.
NG >> Repair open circuit or short to ground or short to power in harness or connectors.

8. CHECK CAMSHAFT POSITION SENSOR (PHASE)

Refer to EC-213, "Component Inspection".

OK or NG

OK >> GO TO 9.
NG >> Replace camshaft position sensor (PHASE).

9. CHECK INTERMITTENT INCIDENT

Refer to GI-35, "How to Check Terminal" and GI-38, "Intermittent Incident".

>> **INSPECTION END**

Component Inspection

INFOID:0000000001351566

CAMSHAFT POSITION SENSOR (PHASE)

1. Loosen the fixing bolt of the sensor.
2. Disconnect camshaft position sensor (PHASE) harness connector.
3. Remove the sensor.

4. Visually check the sensor for chipping.

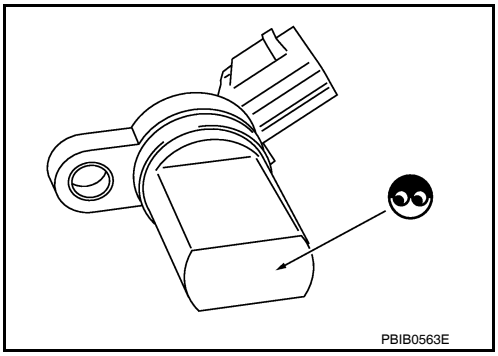

5. Check resistance as shown in the figure.

Terminal No. (Polarity)	Resistance Ω [at 25°C (77°F)]
3(+) - 1 (-)	Except 0 or ∞
2 (+) - 1 (-)	
3 (+) - 2 (-)	

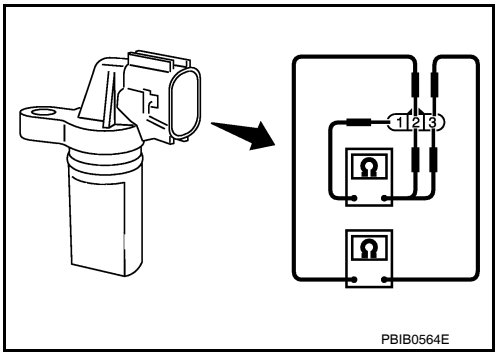

P0420, P0430 THREE WAY CATALYST FUNCTION

On Board Diagnosis Logic

INFOID:0000000001351568

The ECM monitors the switching frequency ratio of air fuel sensor (A/F) sensor 1 and heated oxygen sensor 2.
A three way catalyst (manifold) with high oxygen storage capacity will indicate a low switching frequency of heated oxygen sensor 2. As oxygen storage capacity decreases, the heated oxygen sensor 2 switching frequency will increase.
When the frequency ratio of air fuel ratio (A/F) sensor 1 and heated oxygen sensor 2 approaches a specified limit value, the three way catalyst (manifold) malfunction is diagnosed.

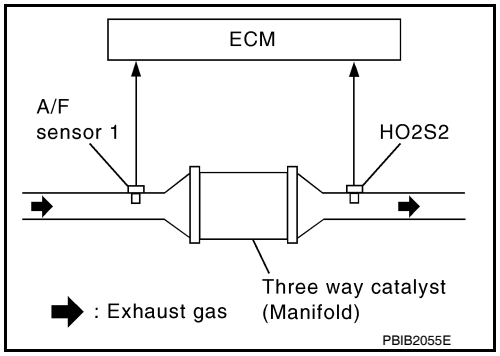

DTC No.	Trouble diagnosis name	DTC detecting condition	Possible cause
P0420 0420 (Bank 1)	Catalyst system efficiency below threshold	• Three way catalyst (manifold) does not operate properly. • Three way catalyst (manifold) does not have enough oxygen storage capacity.	• Three way catalyst (manifold) • Exhaust tube • Intake air leaks • Fuel injector • Fuel injector leaks • Spark plug • Improper ignition timing
P0430 0430 (Bank 2)			

DTC Confirmation Procedure

INFOID:0000000001351569

NOTE:
If DTC Confirmation Procedure has been previously conducted, always turn ignition switch OFF and wait at least 10 seconds before conducting the next test.

WITH CONSULT-III

TESTING CONDITION:
Do not hold engine speed for more than the specified minutes below.

1. Turn ignition switch ON and select “DATA MONITOR” mode with CONSULT-III.
2. Start engine and warm it up to the normal operating temperature.
3. Turn ignition switch OFF and wait at least 10 seconds.
4. Start engine and keep the engine speed between 3,500 and 4,000 rpm for at least 1 minute under no load.
5. Let engine idle for 1 minute.
6. Make sure that “COOLAN TEMP/S” indicates more than 70°C (158°F).
   If not, warm up engine and go to next step when “COOLAN TEMP/S” indication reaches to 70°C (158°F).
7. Open engine hood.
8. Select “DTC & SRT CONFIRMATION” then “SRT WORK SUPPORT” mode with CONSULT-III.
9. Rev engine up to 2,000 to 3,000 rpm and hold it for 3 consecutive minutes then release the accelerator pedal completely.
   If “INCMP” of “CATALYST” changed to “CMPLT”, go to step 12.
10. Wait 5 seconds at idle.
11. Rev engine up to 2,000 to 3,000 rpm and maintain it until “INCMP” of “CATALYST” changes to “CMPLT” (It will take approximately 5 minutes).
    If not “CMPLT”, stop engine and cool it down to less than 70°C (158°F) and then retest from step 1.
12. Select “SELF-DIAG RESULTS” mode with CONSULT-III.
13. Confirm that the 1st trip DTC is not detected.
    If the 1st trip DTC is detected, go to EC-216, "Diagnosis Procedure".

Overall Function Check

INFOID:0000000001351570

Use this procedure to check the overall function of the three way catalyst (manifold). During this check, a 1st trip DTC might not be confirmed.

WITH GST

1. Start engine and warm it up to the normal operating temperature.
2. Turn ignition switch OFF and wait at least 10 seconds.
3. Start engine and keep the engine speed between 3,500 and 4,000 rpm for at least 1 minute under no load.
4. Let engine idle for 1 minute.
5. Open engine hood.
6. Set voltmeter probes between ECM terminals ECM terminals 55 [HO2S2 (bank 1) signal], 74 [HO2S2 (bank 2) signal] and ground.
7. Keep engine speed at 2,500 rpm constant under no load.
8. Make sure that the voltage does not vary for more than 5 seconds.
   If the voltage fluctuation cycle takes less than 5 seconds, go to EC-216, "Diagnosis Procedure".
   - 1 cycle: 0.6 - 1.0 → 0 - 0.3 → 0.6 - 1.0

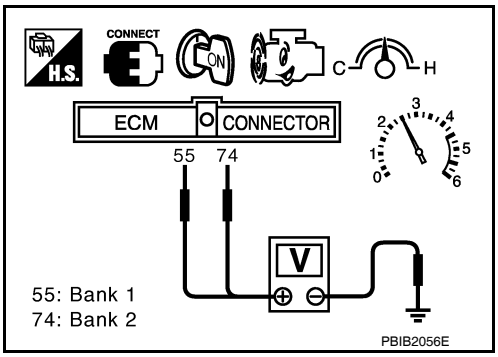

Diagnosis Procedure

INFOID:0000000001351571

1. CHECK EXHAUST SYSTEM

Visually check exhaust tubes and muffler for dent.

OK or NG

OK >> GO TO 2.
NG >> Repair or replace.

2. CHECK EXHAUST GAS LEAK

1. Start engine and run it at idle.
2. Listen for an exhaust gas leak before the three way catalyst (manifold).

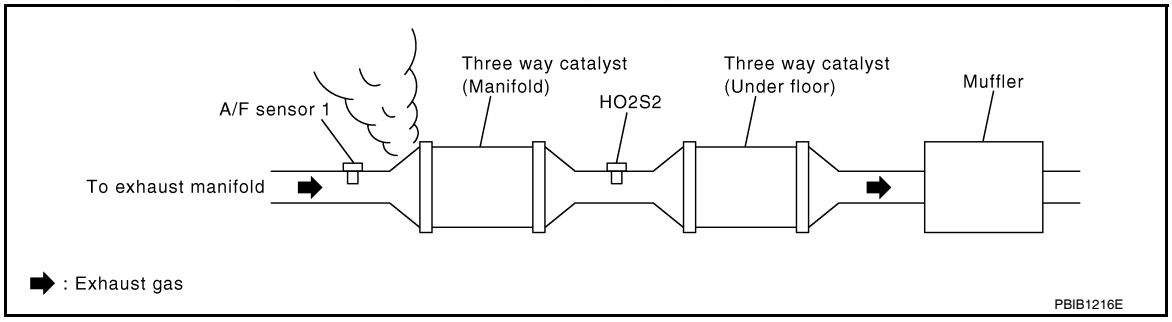

OK or NG

OK >> GO TO 3.
NG >> Repair or replace.

3. CHECK INTAKE AIR LEAK

Listen for an intake air leak after the mass air flow sensor.

OK or NG

OK >> GO TO 4.
NG >> Repair or replace.

4. CHECK IGNITION TIMING

Check the following items. Refer to EC-13, "Basic Inspection".

Items	Specifications
Target idle speed	650 ± 50 rpm (in P or N position)
Ignition timing	15 ± 5° BTDC (in P or N position)

OK or NG

OK >> GO TO 5.
NG >> Follow the EC-13, "Basic Inspection".

5. CHECK FUEL INJECTOR

1. Stop engine and then turn ignition switch ON.
2. Check voltage between ECM terminals 21, 22, 23, 40, 41, 42, 44, 63 and ground with CONSULT-III or tester.
   Refer to Wiring Diagram for fuel injector, EC-439, "Wiring Diagram - ENGINE CONTROL SYSTEM -".

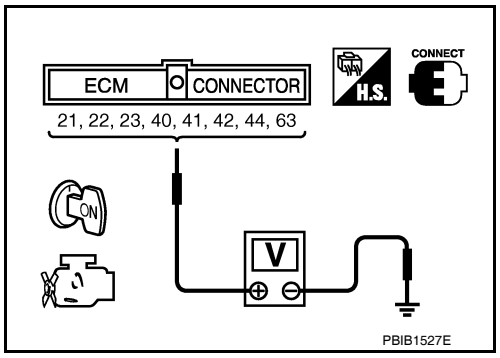

Battery voltage should exist.

OK or NG

OK >> GO TO 6.
NG >> Perform EC-411, "Diagnosis Procedure".

6. CHECK FUNCTION OF IGNITION COIL-I

CAUTION:
Do the following procedure in the place where ventilation is good without the combustible.

1. Turn ignition switch OFF.
2. Remove fuel pump fuse in IPDM E/R to release fuel pressure.
   NOTE:
   Do not use CONSULT-III to release fuel pressure, or fuel pressure applies again during the following procedure.
3. Start engine.
4. After engine stalls, crank it two or three times to release all fuel pressure.
5. Turn ignition switch OFF.
6. Remove all ignition coil harness connectors to avoid the electrical discharge from the ignition coils.
7. Remove ignition coil and spark plug of the cylinder to be checked.

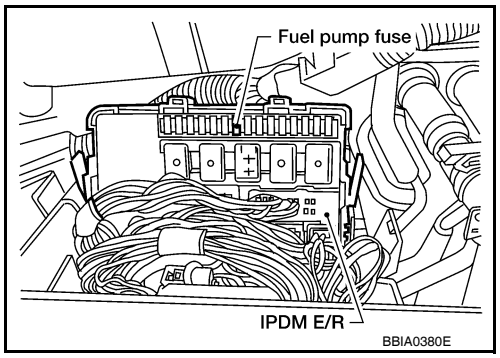

8. Crank engine for 5 seconds or more to remove combustion gas in the cylinder.
9. Connect spark plug and harness connector to ignition coil.
10. Fix ignition coil using a rope etc. with gap of 13 - 17 mm between the edge of the spark plug and grounded metal portion as shown in the figure.
11. Crank engine for about 3 seconds, and check whether spark is generated between the spark plug and the grounded metal portion.

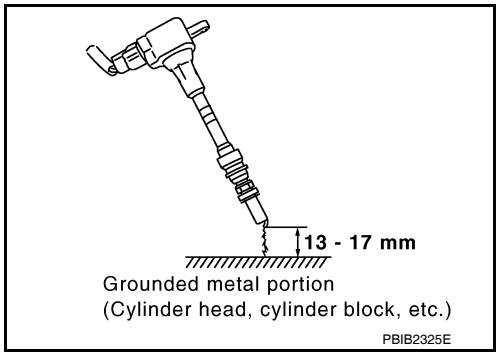

Spark should be generated.

CAUTION:
- **Do not approach to the spark plug and the ignition coil within 50cm. Be careful not to get an electrical shock while checking, because the electrical discharge voltage becomes 20kV or more.**
- **It might cause to damage the ignition coil if the gap of more than 17 mm is taken.**

NOTE:
When the gap is less than 13 mm, the spark might be generated even if the coil is malfunctioning.

OK or NG

OK >> GO TO 10.

NG >> GO TO 7.

7. CHECK FUNCTION OF IGNITION COIL-II

1. Turn ignition switch OFF.
2. Disconnect spark plug and connect a known-good spark plug.
3. Crank engine for about 3 seconds, and recheck whether spark is generated between the spark plug and the grounded metal portion.

Spark should be generated.

OK or NG

OK >> GO TO 8.
NG >> Check ignition coil, power transistor and their circuits. Refer to EC-411, "Diagnosis Procedure".

8. CHECK SPARK PLUG

Check the initial spark plug for fouling, etc.

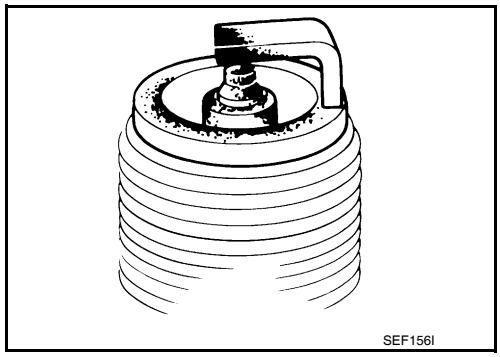

OK or NG

OK >> Replace malfunctioning spark plug(s) with standard type one(s). For spark plug type, refer to EM-16, "Removal and Installation".
NG >> 1. Repair or clean spark plug.
2. GO TO 9.

9. CHECK FUNCTION OF IGNITION COIL-III

1. Reconnect the initial spark plugs.
2. Crank engine for about three seconds, and recheck whether spark is generated between the spark plug and the grounded portion.

Spark should be generated.

OK or NG

OK >> **INSPECTION END**
NG >> Replace malfunctioning spark plug(s) with standard type one(s). For spark plug type, refer to EM-16, "Removal and Installation".

10. CHECK FUEL INJECTOR

1. Turn ignition switch OFF.
2. Remove fuel injector assembly.
   Refer to EM-40, "Removal and Installation".
   Keep fuel hose and all fuel injectors connected to fuel injector gallery.
3. Disconnect all ignition coil harness connectors.
4. Reconnect all fuel injector harness connectors disconnected.
5. Turn ignition switch ON.
   Make sure fuel does not drip from fuel injector.

OK or NG

OK (Does not drip.)>>GO TO 11.
NG (Drips.)>>Replace the fuel injector(s) from which fuel is dripping.

11. CHECK INTERMITTENT INCIDENT

Refer to GI-35, "How to Check Terminal" and GI-38, "Intermittent Incident".

Trouble is fixed.>>**INSPECTION END**
Trouble is not fixed.>>Replace three way catalyst assembly.

P0441 EVAP CONTROL SYSTEM

System Description

INFOID:0000000001351572

NOTE:
If DTC P0441 is displayed with other DTC such as P2122, P2123, P2127, P2128 or P2138, first perform trouble diagnosis for other DTC.

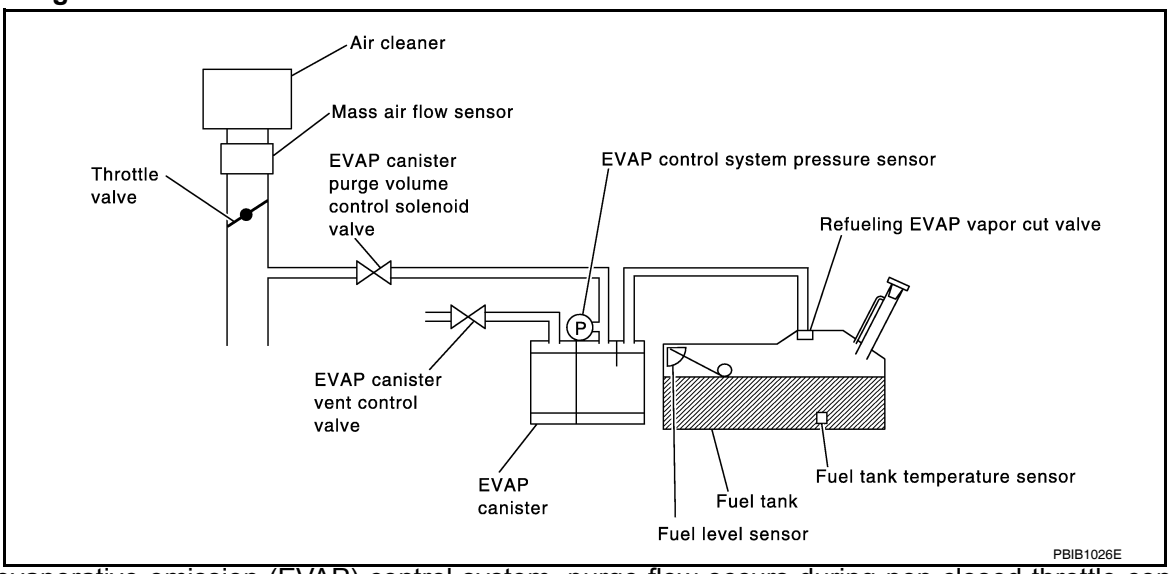

In this evaporative emission (EVAP) control system, purge flow occurs during non-closed throttle conditions. Purge volume is related to air intake volume. Under normal purge conditions (non-closed throttle), the EVAP canister purge volume control solenoid valve is open to admit purge flow. Purge flow exposes the EVAP control system pressure sensor to intake manifold vacuum.

On Board Diagnosis Logic

INFOID:0000000001351573

Under normal conditions (non-closed throttle), sensor output voltage indicates if pressure drop and purge flow are adequate. If not, a malfunction is determined.

DTC No.	Trouble diagnosis name	DTC detecting condition	Possible cause
P0441 0441	EVAP control system incorrect purge flow	EVAP control system does not operate properly, EVAP control system has a leak between intake manifold and EVAP control system pressure sensor.	• EVAP canister purge volume control solenoid valve stuck closed • EVAP control system pressure sensor and the circuit • Loose, disconnected or improper connection of rubber tube • Blocked rubber tube • Cracked EVAP canister • EVAP canister purge volume control solenoid valve circuit • Accelerator pedal position sensor • Blocked purge port • EVAP canister vent control valve

DTC Confirmation Procedure

INFOID:0000000001351574

CAUTION:
Always drive vehicle at a safe speed.
NOTE:
If DTC Confirmation Procedure has been previously conducted, always turn ignition switch OFF and wait at least 10 seconds before conducting the next test.
TESTING CONDITION:
Always perform test at a temperature of 5°C (41°F) or more.

WITH CONSULT-III

1. Start engine and warm it up to normal operating temperature.

2. Turn ignition switch OFF and wait at least 10 seconds.
3. Start engine and let it idle for at least 70 seconds.
4. Select “PURG FLOW P0441” of “EVAPORATIVE SYSTEM” in “DTC WORK SUPPORT” mode with CONSULT-III.
5. Touch “START”.
   If “COMPLETED” is displayed, go to step 7.
6. When the following conditions are met, “TESTING” will be displayed on the CONSULT-III screen. Maintain the conditions continuously until “TESTING” changes to “COMPLETED”. (It will take at least 35 seconds.)

Selector lever	Suitable position
VHCL SPEED SE	32 - 120 km/h (20 - 75 MPH)
ENG SPEED	500 - 3,000 rpm
B/FUEL SCHDL	1.0 - 12.0 msec
COOLAN TEMP/S	0 - 119°C (32 - 246°F)

If “TESTING” is not changed for a long time, retry from step 2.

7. Make sure that “OK” is displayed after touching “SELF-DIAG RESULTS”. If “NG” is displayed, refer to EC-220, "Diagnosis Procedure".

Overall Function Check

INFOID:0000000001351575

Use this procedure to check the overall monitoring function of the EVAP control system purge flow monitoring. During this check, a 1st trip DTC might not be confirmed.

WITH GST

1. Lift up drive wheels.
2. Start engine (VDC switch OFF) and warm it up to normal operating temperature.
3. Turn ignition switch OFF, wait at least 10 seconds.
4. Start engine and wait at least 70 seconds.
5. Set voltmeter probes to ECM terminals 32 (EVAP control system pressure sensor signal) and ground.
6. Check EVAP control system pressure sensor value at idle speed and note it.
7. Establish and maintain the following conditions for at least 1 minute.

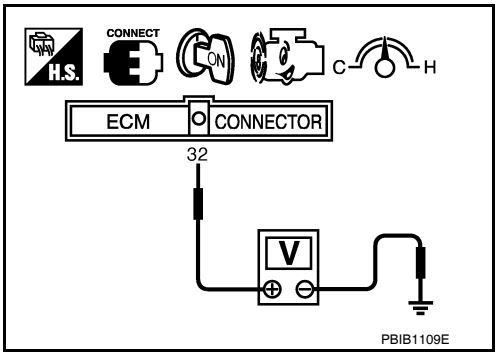

Air conditioner switch	ON
Headlamp switch	ON
Rear window defogger switch	ON
Engine speed	Approx. 3,000 rpm
Gear position	Any position other than P, N or R

8. Verify that EVAP control system pressure sensor value stays 0.1V less than the value at idle speed (measured at step 6) for at least 1 second.
9. If NG, go to EC-220, "Diagnosis Procedure".

Diagnosis Procedure

INFOID:0000000001351576

1. CHECK EVAP CANISTER

1. Turn ignition switch OFF.
2. Check EVAP canister for cracks.

OK or NG

OK (With CONSULT-III)>>GO TO 2.
OK (Without CONSULT-III)>>GO TO 3.
NG >> Replace EVAP canister.

2. CHECK PURGE FLOW

With CONSULT-III

1. Disconnect vacuum hose connected to EVAP canister purge volume control solenoid valve at EVAP service port and install vacuum gauge. For the location of EVAP service port, refer to EC-37, "Description".
2. Start engine and let it idle.
3. Select “PURG VOL CONT/V” in “ACTIVE TEST” mode with CONSULT-III.
4. Rev engine up to 2,000 rpm.
5. Touch “Qd” and “Qu” on CONSULT-III screen to adjust “PURG VOL CONT/V” opening and check vacuum existence.

PURG VOL CONT/V	Vacuum
100%	Should exist.
0%	Should not exist.

OK or NG

OK >> GO TO 7.
NG >> GO TO 4.

3. CHECK PURGE FLOW

Without CONSULT-III

1. Start engine and warm it up to normal operating temperature.
2. Stop engine.
3. Disconnect vacuum hose connected to EVAP canister purge volume control solenoid valve at EVAP service port and install vacuum gauge. For the location of EVAP service port, refer to EC-37, "Description".
4. Start engine and let it idle.
   Do not depress accelerator pedal even slightly.
5. Check vacuum gauge indication before 60 seconds passed after starting engine.

   Vacuum should not exist.

6. Revving engine up to 2,000 rpm after 100 seconds passed after starting engine.

   Vacuum should exist.

OK or NG

OK >> GO TO 7.
NG >> GO TO 4.

4. CHECK EVAP PURGE LINE

1. Turn ignition switch OFF.
2. Check EVAP purge line for improper connection or disconnection.
   Refer to EC-37, "Description".

OK or NG

OK >> GO TO 5.
NG >> Repair it.

5. CHECK EVAP PURGE HOSE AND PURGE PORT

1. Disconnect purge hoses connected to EVAP service port **A** and EVAP canister purge volume control solenoid valve **B**.
2. Blow air into each hose and EVAP purge port **C**.

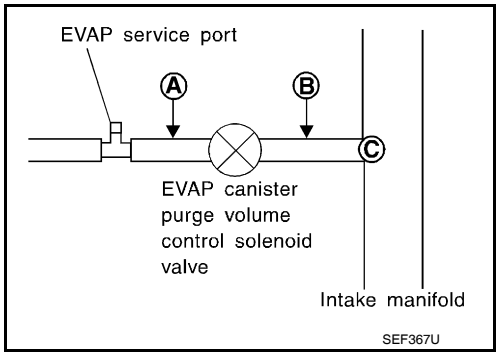

3. Check that air flows freely.

OK or NG

OK (With CONSULT-III)>>GO TO 6.
OK (Without CONSULT-III)>>GO TO 7.
NG >> Repair or clean hoses and/or purge port.

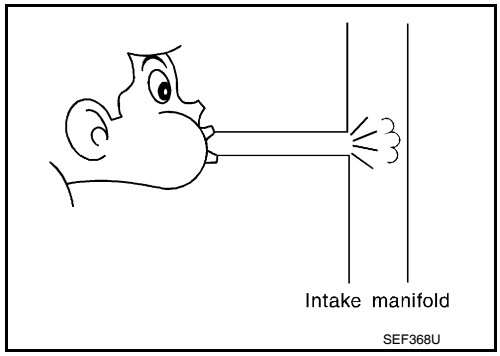

6. CHECK EVAP CANISTER PURGE VOLUME CONTROL SOLENOID VALVE

With CONSULT-III

1. Start engine.
2. Perform “PURG VOL CONT/V” in “ACTIVE TEST” mode with CONSULT-III. Check that engine speed varies according to the valve opening.

OK or NG

OK >> GO TO 8.
NG >> GO TO 7.

7. CHECK EVAP CANISTER PURGE VOLUME CONTROL SOLENOID VALVE

Refer to EC-238, "Component Inspection".

OK or NG

OK >> GO TO 8.
NG >> Replace EVAP canister purge volume control solenoid valve.

8. CHECK EVAP CONTROL SYSTEM PRESSURE SENSOR CONNECTOR

1. Disconnect EVAP control system pressure sensor harness connector.
2. Check connectors for water.

Water should not exist.

OK or NG

OK >> GO TO 9.
NG >> Replace EVAP control system pressure sensor.

9. CHECK EVAP CONTROL SYSTEM PRESSURE SENSOR FUNCTION

Refer to DTC Confirmation Procedure for DTC P0452, EC-250, "DTC Confirmation Procedure" and P0453, EC-254, "DTC Confirmation Procedure".

OK or NG

OK >> GO TO 10.
NG >> Replace EVAP control system pressure sensor.

10. CHECK RUBBER TUBE FOR CLOGGING

1. Disconnect rubber tube connected to EVAP canister vent control valve.
2. Check the rubber tube for clogging.

OK or NG

OK >> GO TO 11.
NG >> Clean the rubber tube using an air blower.

11. CHECK EVAP CANISTER VENT CONTROL VALVE

Refer to EC-241, "Component Inspection".

OK or NG

OK >> GO TO 12.
NG >> Replace EVAP canister vent control valve.

12. CHECK EVAP PURGE LINE

Inspect EVAP purge line (pipe and rubber tube). Check for evidence of leaks.
Refer to EC-37, "Description".

OK or NG

OK >> GO TO 13.
NG >> Replace it.

13. CLEAN EVAP PURGE LINE

Clean EVAP purge line (pipe and rubber tube) using air blower.

>> GO TO 14.

14. CHECK INTERMITTENT INCIDENT

Refer to GI-35, "How to Check Terminal" and GI-38, "Intermittent Incident".

>> **INSPECTION END**

P0442 EVAP CONTROL SYSTEM

On Board Diagnosis Logic

INFOID:0000000001351577

This diagnosis detects leaks in the EVAP purge line using engine intake manifold vacuum.
If pressure does not increase, the ECM will check for leaks in the line between the fuel tank and EVAP canister purge volume control solenoid valve, under the following “Vacuum test” conditions.
The EVAP canister vent control valve is closed to shut the EVAP purge line off. The EVAP canister purge volume control solenoid valve will then be opened to depressurize the EVAP purge line using intake manifold vacuum. After this occurs, the EVAP canister purge volume control solenoid valve will be closed.

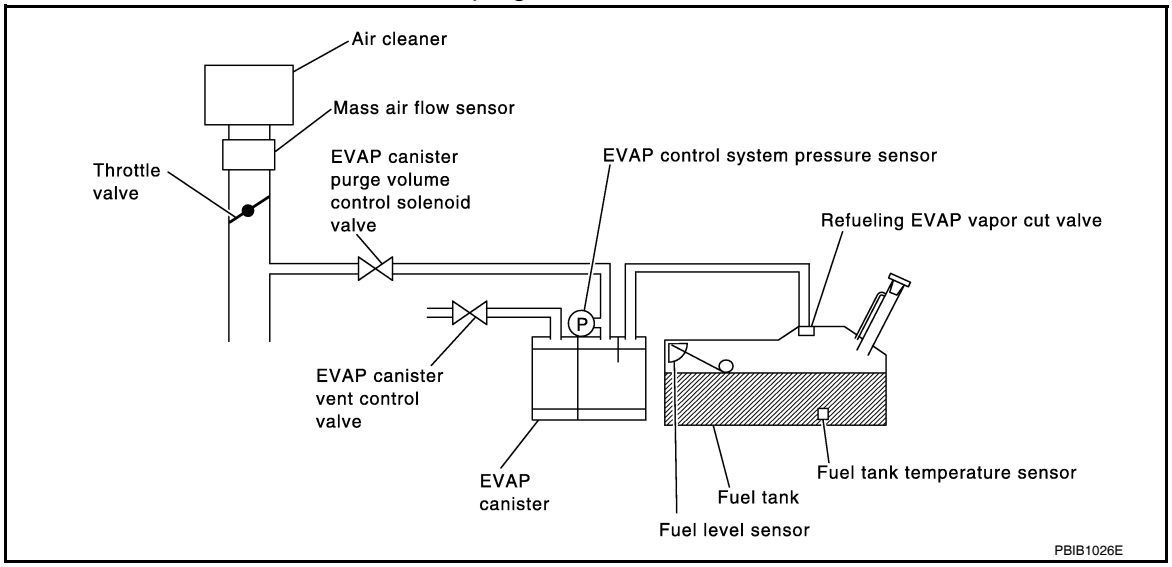

DTC No.	Trouble diagnosis name	DTC detecting condition	Possible cause
P0442 0442	EVAP control system small leak detected (negative pressure)	EVAP control system has a leak, EVAP control system does not operate properly.	• Incorrect fuel tank vacuum relief valve • Incorrect fuel filler cap used • Fuel filler cap remains open or fails to close. • Foreign matter caught in fuel filler cap. • Leak is in line between intake manifold and EVAP canister purge volume control solenoid valve. • Foreign matter caught in EVAP canister vent control valve. • EVAP canister or fuel tank leaks • EVAP purge line (pipe and rubber tube) leaks • EVAP purge line rubber tube bent • Loose or disconnected rubber tube • EVAP canister vent control valve and the circuit • EVAP canister purge volume control solenoid valve and the circuit • Fuel tank temperature sensor • O-ring of EVAP canister vent control valve is missing or damaged • EVAP canister is saturated with water • EVAP control system pressure sensor • Fuel level sensor and the circuit • Refueling EVAP vapor cut valve • ORVR system leaks

CAUTION:
- **Use only a genuine NISSAN fuel filler cap as a replacement. If an incorrect fuel filler cap is used, the MIL may come on.**
- **If the fuel filler cap is not tightened properly, the MIL may come on.**
- **Use only a genuine NISSAN rubber tube as a replacement.**

DTC Confirmation Procedure

INFOID:0000000001351578

NOTE:

- If DTC Confirmation Procedure has been previously conducted, always turn ignition switch OFF and wait at least 10 seconds before conducting the next test.

TESTING CONDITION:

- **Perform "DTC WORK SUPPORT" when the fuel level is between 1/4 and 3/4 full, and vehicle is placed on flat level surface.**
- **Always perform test at a temperature of 0 to 30°C (32 to 86°F).**

WITH CONSULT-III

1. Turn ignition switch ON.
2. Turn ignition switch OFF and wait at least 10 seconds.
3. Turn ignition switch ON and select "DATA MONITOR" mode with CONSULT-III.
4. Make sure that the following conditions are met.
   COOLAN TEMP/S: 0 - 70°C (32 - 158°F)
   INT/A TEMP SE: 0 - 30°C (32 - 86°F)
5. Select "EVP SML LEAK P0442/P1442" of "EVAPORATIVE SYSTEM" in "DTC WORK SUPPORT" mode with CONSULT-III.
   Follow the instruction displayed.
   NOTE:
   If the engine speed cannot be maintained within the range displayed on the CONSULT-III screen, go to EC-13, "Basic Inspection".
6. Make sure that "OK" is displayed.
   If "NG" is displayed, refer to EC-225, "Diagnosis Procedure".
   NOTE:
   Make sure that EVAP hoses are connected to EVAP canister purge volume control solenoid valve properly.

WITH GST

NOTE:
Be sure to read the explanation of EC-462, "DTC Index" before driving vehicle.

1. Start engine.
2. Drive vehicle according to EC-462, "DTC Index".
3. Stop vehicle.
4. Turn ignition switch OFF, wait at least 10 seconds and then turn ON.
5. Select Service $07 with GST.

- If P0442 is displayed on the screen, go to EC-225, "Diagnosis Procedure".
- If P0441 is displayed on the screen, go to EC-220, "Diagnosis Procedure".

Diagnosis Procedure

INFOID:0000000001351579

1. CHECK FUEL FILLER CAP DESIGN

1. Turn ignition switch OFF.
2. Check for genuine NISSAN fuel filler cap design.

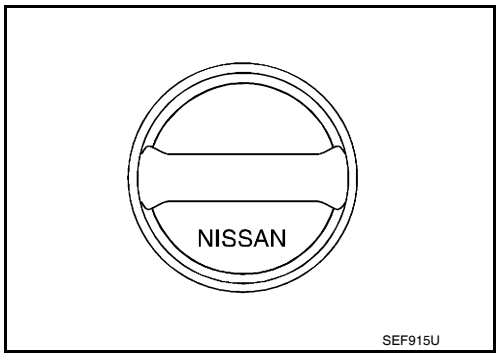

OK or NG

OK >> GO TO 2.
NG >> Replace with genuine NISSAN fuel filler cap.

2. CHECK FUEL FILLER CAP INSTALLATION

Check that the cap is tightened properly by rotating the cap clockwise.

OK or NG

OK >> GO TO 3.
NG >> 1. Open fuel filler cap, then clean cap and fuel filler neck threads using air blower.
2. Retighten until ratcheting sound is heard.

3. CHECK FUEL FILLER CAP FUNCTION

Check for air releasing sound while opening the fuel filler cap.

OK or NG

OK >> GO TO 5.
NG >> GO TO 4.

4. CHECK FUEL TANK VACUUM RELIEF VALVE

Refer to EC-272, "Component Inspection" .

OK or NG

OK >> GO TO 5.
NG >> Replace fuel filler cap with a genuine one.

5. INSTALL THE PRESSURE PUMP

To locate the EVAP leak, install EVAP service port adapter and pressure pump to EVAP service port securely.

NOTE:

Improper installation of the EVAP service port adapter to the EVAP service port may cause leaking.

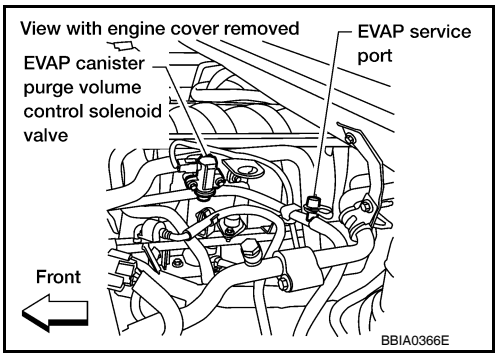

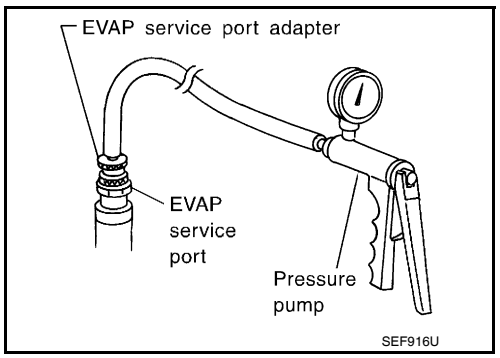

With CONSULT-III>>GO TO 6.
Without CONSULT-III>>GO TO 7.

6. CHECK FOR EVAP LEAK

With CONSULT-III

1. Turn ignition switch ON.
2. Select “EVAP SYSTEM CLOSE” of “WORK SUPPORT” mode with CONSULT-III.
3. Touch “START” and apply pressure into the EVAP line until the pressure indicator reaches the middle of the bar graph.

   CAUTION:
   - **Never use compressed air or a high pressure pump.**
   - **Do not exceed 4.12 kPa (0.042 kg/cm^2 , 0.6 psi) of pressure in the system.**

4. Using EVAP leak detector, locate the EVAP leak. For the leak detector, refer to the instruction manual for more details. Refer to EC-37, "Description" .

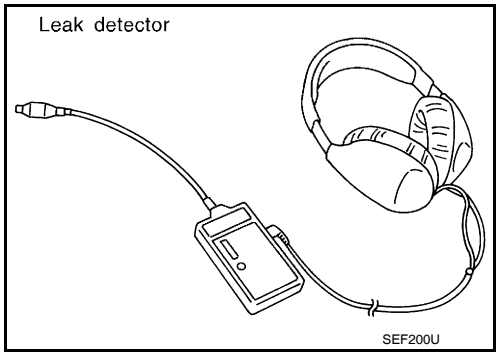

OK or NG

OK >> GO TO 8.
NG >> Repair or replace.

7. CHECK FOR EVAP LEAK

Without CONSULT-III

1. Turn ignition switch OFF.
2. Apply 12 volts DC to EVAP canister vent control valve. The valve will close. (Continue to apply 12 volts until the end of test.)

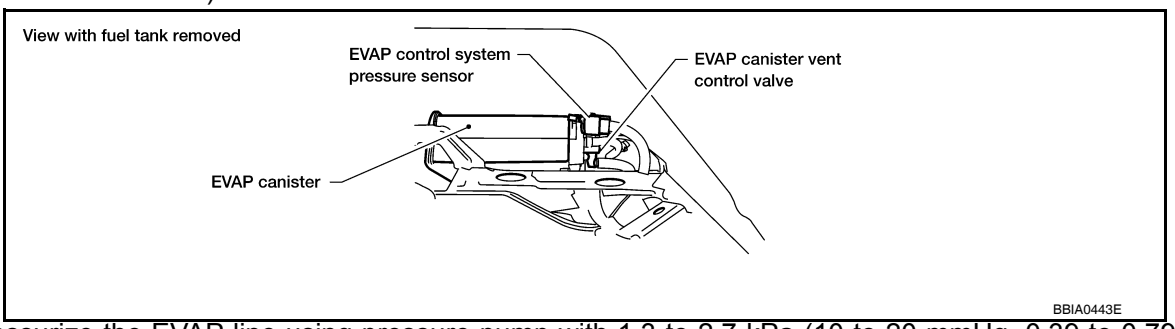

3. Pressurize the EVAP line using pressure pump with 1.3 to 2.7 kPa (10 to 20 mmHg, 0.39 to 0.79 inHg), then remove pump and EVAP service port adapter.
   CAUTION:
   - **Never use compressed air or a high pressure pump.**
   - **Do not exceed 4.12 kPa (0.042 kg/cm^2 , 0.6 psi) of pressure in the system.**
4. Using EVAP leak detector, locate the EVAP leak. For the leak detector, refer to the instruction manual for more details. Refer to EC-37, "Description" .

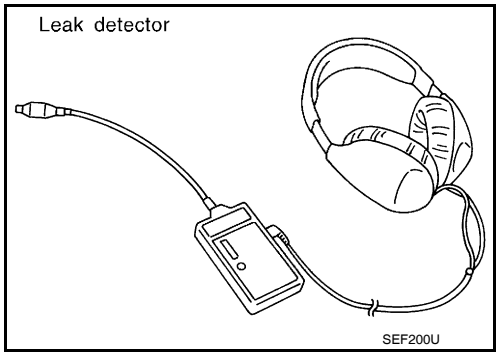

OK or NG

OK >> GO TO 8.
NG >> Repair or replace.

8. CHECK EVAP CANISTER VENT CONTROL VALVE

Check the following.
- EVAP canister vent control valve is installed properly.
  Refer to EC-498, "Removal and Installation" .
- EVAP canister vent control valve.
  Refer to EC-241, "Component Inspection" .

OK or NG

OK >> GO TO 9.
NG >> Repair or replace EVAP canister vent control valve and O-ring.

9. CHECK IF EVAP CANISTER SATURATED WITH WATER

1. Remove EVAP canister with EVAP canister vent control valve and EVAP control system pressure sensor attached.

2. Does water drain from the EVAP canister?

Yes or No

Yes >> GO TO 10.
No (With CONSULT-III)>>GO TO 12.
No (Without CONSULT-III)>>GO TO 13.

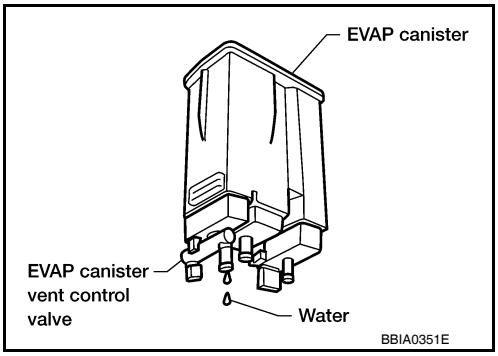

10. CHECK EVAP CANISTER

Weigh the EVAP canister with the EVAP canister vent control valve and EVAP control system pressure sensor attached.

The weight should be less than 2.5 kg (5.5 lb).

OK or NG

OK (With CONSULT-III)>>GO TO 12.
OK (Without CONSULT-III)>>GO TO 13.
NG >> GO TO 11.

11. DETECT MALFUNCTIONING PART

Check the following.
- EVAP canister for damage
- EVAP hose between EVAP canister and vehicle frame for clogging or poor connection

>> Repair hose or replace EVAP canister.

12. CHECK EVAP CANISTER PURGE VOLUME CONTROL SOLENOID VALVE OPERATION

With CONSULT-III

1. Disconnect vacuum hose to EVAP canister purge volume control solenoid valve at EVAP service port.
2. Start engine.
3. Perform “PURG VOL CONT/V” in “ACTIVE TEST” mode.
4. Touch “Qu” on CONSULT-III screen to increase “PURG VOL CONT/V” opening to 100%.
5. Check vacuum hose for vacuum when revving engine up to 2,000 rpm.

Vacuum should exist.

OK or NG

OK >> GO TO 15.
NG >> GO TO 14.

13. CHECK EVAP CANISTER PURGE VOLUME CONTROL SOLENOID VALVE OPERATION

Without CONSULT-III

1. Start engine and warm it up to normal operating temperature.
2. Stop engine.
3. Disconnect vacuum hose to EVAP canister purge volume control solenoid valve at EVAP service port.
4. Start engine and let it idle for at least 80 seconds.
5. Check vacuum hose for vacuum when revving engine up to 2,000 rpm.

Vacuum should exist.

OK or NG

OK >> GO TO 16.
NG >> GO TO 14.

14. CHECK VACUUM HOSE

Check vacuum hoses for clogging or disconnection. Refer to EC-37, "Description".

OK or NG

OK >> GO TO 15.
NG >> Repair or reconnect the hose.

15. CHECK EVAP CANISTER PURGE VOLUME CONTROL SOLENOID VALVE

Refer to EC-238, "Component Inspection".

OK or NG

OK >> GO TO 16.
NG >> Replace EVAP canister purge volume control solenoid valve.

16. CHECK FUEL TANK TEMPERATURE SENSOR

Refer to EC-190, "Component Inspection".

OK or NG

OK >> GO TO 17.
NG >> Replace fuel level sensor unit.

17. CHECK EVAP CONTROL SYSTEM PRESSURE SENSOR

Refer to EC-248, "Component Inspection".

OK or NG

OK >> GO TO 18.
NG >> Replace EVAP control system pressure sensor.

18. CHECK EVAP PURGE LINE

Check EVAP purge line (pipe, rubber tube, fuel tank and EVAP canister) for cracks or improper connection. Refer to EC-37, "Description".

OK or NG

OK >> GO TO 19.
NG >> Repair or reconnect the hose.

19. CLEAN EVAP PURGE LINE

Clean EVAP purge line (pipe and rubber tube) using air blower.

>> GO TO 20.

20. CHECK EVAP/ORVR LINE

Check EVAP/ORVR line between EVAP canister and fuel tank for clogging, kink, looseness and improper connection. For location, refer to EC-416.

OK or NG

OK >> GO TO 21.
NG >> Repair or replace hoses and tubes.

21. CHECK RECIRCULATION LINE

Check recirculation line between filler neck tube and fuel tank for clogging, kink, cracks, looseness and improper connection.

OK or NG

OK >> GO TO 22.
NG >> Repair or replace hose, tube or filler neck tube.

22. CHECK REFUELING EVAP VAPOR CUT VALVE

Refer to EC-418, "Component Inspection".

OK or NG

OK >> GO TO 23.
NG >> Replace refueling EVAP vapor cut valve with fuel tank.

23. CHECK FUEL LEVEL SENSOR

Refer to MWI-34, "Component Inspection".

OK or NG

OK >> GO TO 24.

NG >> Replace fuel level sensor unit.

24. CHECK INTERMITTENT INCIDENT

Refer to GI-35, "How to Check Terminal" and GI-38, "Intermittent Incident".

>> **INSPECTION END**

Component Inspection

INFOID:0000000001351299

FUEL TANK VACUUM RELIEF VALVE (BUILT INTO FUEL FILLER CAP)

1. Wipe clean valve housing.

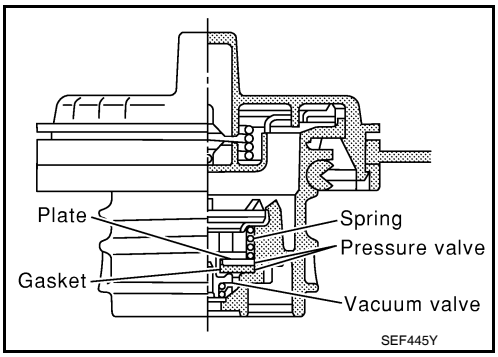

2. Check valve opening pressure and vacuum.

Pressure: **15.3 - 20.0 kPa (0.156 - 0.204 kg/cm^2, 2.22 - 2.90 psi)**

Vacuum: **−6.0 to −3.3 kPa (−0.061 to −0.034 kg/cm^2, −0.87 to −0.48 psi)**

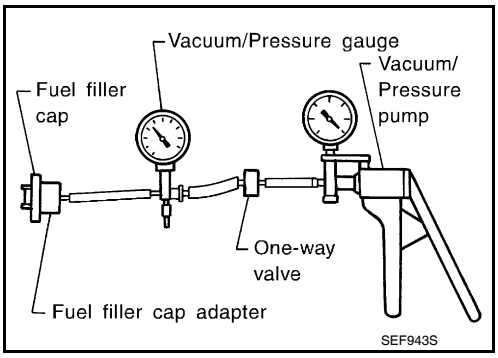

3. If out of specification, replace fuel filler cap as an assembly.

CAUTION:
Use only a genuine fuel filler cap as a replacement. If an incorrect fuel filler cap is used, the MIL may come on.

P0443 EVAP CANISTER PURGE VOLUME CONTROL SOLENOID VALVE

Description

INFOID:0000000001351580

SYSTEM DESCRIPTION

Sensor	Input signal to ECM	ECM function	Actuator
Crankshaft position sensor (POS) Camshaft position sensor (PHASE)	Engine speed*1	EVAP canister purge flow control	EVAP canister purge volume control solenoid valve
Mass air flow sensor	Amount of intake air		
Engine coolant temperature sensor	Engine coolant temperature		
Battery	Battery voltage*1		
Throttle position sensor	Throttle position		
Accelerator pedal position sensor	Accelerator pedal position		
Air fuel ratio (A/F) sensor 1	Density of oxygen in exhaust gas (Mixture ratio feedback signal)		
Fuel tank temperature sensor	Fuel temperature in fuel tank		
Wheel sensor	Vehicle speed*2		

*1: ECM determines the start signal status by the signals of engine speed and battery voltage.

*2: This signal is sent to the ECM through CAN communication line.

This system controls flow rate of fuel vapor from the EVAP canister. The opening of the vapor by-pass passage in the EVAP canister purge volume control solenoid valve changes to control the flow rate. The EVAP canister purge volume control solenoid valve repeats ON/OFF operation according to the signal sent from the ECM. The opening of the valve varies for optimum engine control. The optimum value stored in the ECM is determined by considering various engine conditions. When the engine is operating, the flow rate of fuel vapor from the EVAP canister is regulated as the air flow changes.

COMPONENT DESCRIPTION

The EVAP canister purge volume control solenoid valve uses a ON/OFF duty to control the flow rate of fuel vapor from the EVAP canister. The EVAP canister purge volume control solenoid valve is moved by ON/OFF pulses from the ECM. The longer the ON pulse, the greater the amount of fuel vapor that will flow through the valve.

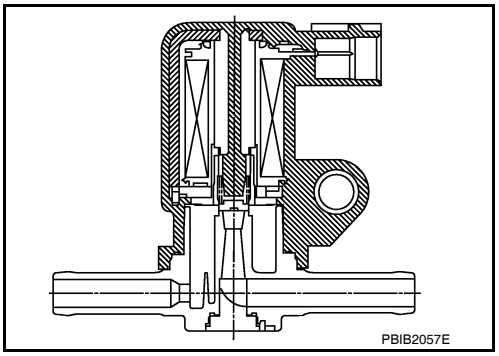

On Board Diagnosis Logic

INFOID:0000000001351582

DTC No.	Trouble diagnosis name	DTC detecting condition	Possible cause
P0443 0443	EVAP canister purge volume control solenoid valve	The canister purge flow is detected during the specified driving conditions, even when EVAP canister purge volume control solenoid valve is completely closed.	• EVAP control system pressure sensor • EVAP canister purge volume control solenoid valve (The valve is stuck open.) • EVAP canister vent control valve • EVAP canister • Hoses (Hoses are connected incorrectly or clogged.)

DTC Confirmation Procedure

INFOID:0000000001351583

NOTE:

If DTC Confirmation Procedure has been previously conducted, always turn ignition switch OFF and wait at least 10 seconds before conducting the next test.

TESTING CONDITION:

Always perform test at a temperature of 5°C (41°F) or more.

WITH CONSULT-III

1. Start engine and warm it up to normal operating temperature.
2. Turn ignition switch OFF and wait at least 10 seconds.
3. Turn ignition switch ON.
4. Select “PURG VOL CN/V P1444” of “EVAPORATIVE SYSTEM” in “DTC WORK SUPPORT” mode with CONSULT-III.
5. Touch “START”.
6. Start engine and let it idle until “TESTING” on CONSULT-III changes to “COMPLETED”. (It will take approximately 10 seconds.)
   If “TESTING” is not displayed after 5 minutes, retry from step 2.
7. Make sure that “OK” is displayed after touching “SELF-DIAG RESULTS”. If “NG” is displayed, refer to EC-232, "Diagnosis Procedure".

WITH GST

1. Start engine and warm it up to normal operating temperature.
2. Turn ignition switch OFF and wait at least 10 seconds.
3. Start engine and let it idle for at least 20 seconds.
4. Select Service $07 with GST.
5. If 1st trip DTC is detected, go to EC-232, "Diagnosis Procedure".

Diagnosis Procedure

INFOID:0000000001351585

1. CHECK EVAP CANISTER PURGE VOLUME CONTROL SOLENOID VALVE POWER SUPPLY CIRCUIT

1. Turn ignition switch OFF.
2. Disconnect EVAP canister purge volume control solenoid valve harness connector.
3. Turn ignition switch ON.

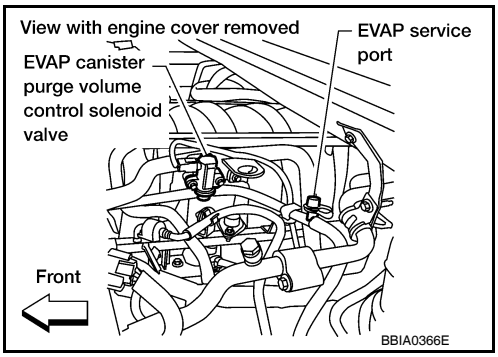

4. Check voltage between EVAP canister purge volume control solenoid valve terminal 1 and ground with CONSULT-III or tester.

Voltage: Battery voltage

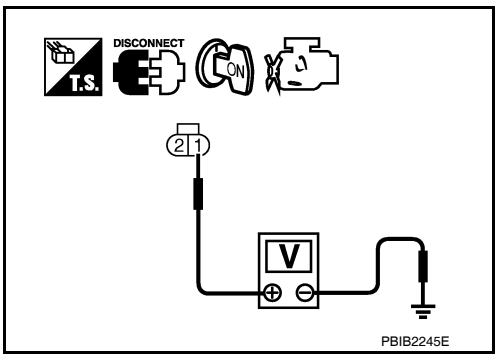

OK or NG

OK >> GO TO 3.
NG >> GO TO 2.

2. DETECT MALFUNCTIONING PART

Check the following.

- Harness connectors E2, F32

- Harness for open or short between EVAP canister purge volume control solenoid valve and IPDM E/R
- Harness for open or short between EVAP canister purge volume control solenoid valve and ECM

>> Repair harness or connectors.

3. CHECK EVAP CANISTER PURGE VOLUME CONTROL SOLENOID VALVE OUTPUT SIGNAL CIRCUIT FOR OPEN AND SHORT

1. Turn ignition switch OFF.
2. Disconnect ECM harness connector.
3. Check harness continuity between ECM terminal 45 and EVAP canister purge volume control solenoid valve terminal 2. Refer to Wiring Diagram.

Continuity should exist.

4. Also check harness for short to ground and short to power.

OK or NG

OK >> GO TO 4.
NG >> Repair open circuit or short to ground or short to power in harness or connectors.

4. CHECK EVAP CONTROL SYSTEM PRESSURE SENSOR CONNECTOR

1. Disconnect EVAP control system pressure sensor harness connector.
2. Check connectors for water.

Water should not exist.

OK or NG

OK >> GO TO 5.
NG >> Replace EVAP control system pressure sensor.

5. CHECK EVAP CONTROL SYSTEM PRESSURE SENSOR

Refer to EC-248, "Component Inspection".

OK or NG

OK (With CONSULT-III)>>GO TO 6.
OK (Without CONSULT-III)>>GO TO 7.
NG >> Replace EVAP control system pressure sensor.

6. CHECK EVAP CANISTER PURGE VOLUME CONTROL SOLENOID VALVE

With CONSULT-III

1. Turn ignition switch OFF.
2. Reconnect all harness connectors disconnected.
3. Start engine.
4. Perform “PURG VOL CONT/V” in “ACTIVE TEST” mode with CONSULT-III. Check that engine speed varies according to the valve opening.

OK or NG

OK >> GO TO 8.
NG >> GO TO 7.

7. CHECK EVAP CANISTER PURGE VOLUME CONTROL SOLENOID VALVE

Refer to EC-234, "Component Inspection".

OK or NG

OK >> GO TO 8.
NG >> Replace EVAP canister purge volume control solenoid valve.

8. CHECK RUBBER TUBE FOR CLOGGING

1. Disconnect rubber tube connected to EVAP canister vent control valve.
2. Check the rubber tube for clogging.

OK or NG

OK >> GO TO 9.

NG >> Clean the rubber tube using an air blower.

9. CHECK EVAP CANISTER VENT CONTROL VALVE

Refer to EC-241, "Component Inspection".

OK or NG

OK >> GO TO 10.
NG >> Replace EVAP canister vent control valve.

10. CHECK IF EVAP CANISTER SATURATED WITH WATER

1. Remove EVAP canister with EVAP canister vent control valve and EVAP control system pressure sensor attached.
2. Check if water will drain from the EVAP canister.

Yes or No

Yes >> GO TO 11.
No >> GO TO 13.

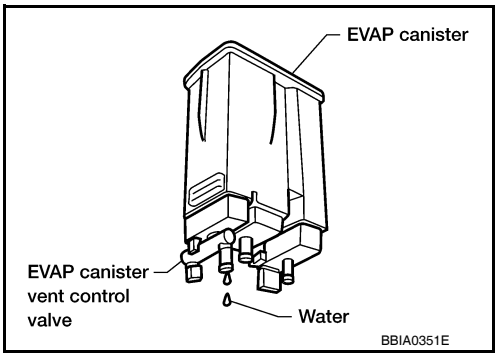

11. CHECK EVAP CANISTER

Weigh the EVAP canister with the EVAP canister vent control valve and EVAP control system pressure sensor attached.

The weight should be less than 2.5 kg (5.5 lb).

OK or NG

OK >> GO TO 13.
NG >> GO TO 12.

12. DETECT MALFUNCTIONING PART

Check the following.
- EVAP canister for damage
- EVAP hose between EVAP canister and vehicle frame for clogging or poor connection

>> Repair hose or replace EVAP canister.

13. CHECK INTERMITTENT INCIDENT

Refer to GI-35, "How to Check Terminal" and GI-38, "Intermittent Incident".

>> **INSPECTION END**

Component Inspection

INFOID:0000000001351586

EVAP CANISTER PURGE VOLUME CONTROL SOLENOID VALVE

With CONSULT-III

Check air passage continuity of EVAP canister purge volume control solenoid valve under the following conditions.

Condition (PURG VOL CONT/V value)	Air passage continuity between A and B
100%	Yes
0%	No

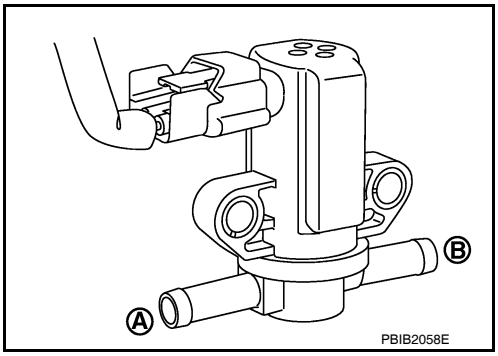

Without CONSULT-III

Check air passage continuity of EVAP canister purge volume control solenoid valve under the following conditions.

Condition	Air passage continuity between A and B
12V direct current supply between terminals 1 and 2	Yes
No supply	No

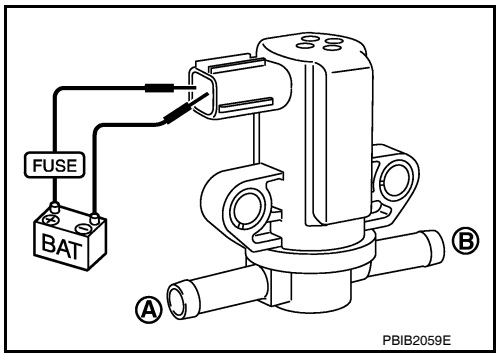

P0444, P0445 EVAP CANISTER PURGE VOLUME CONTROL SOLENOID VALVE

Description

INFOID:0000000001351588

SYSTEM DESCRIPTION

Sensor	Input signal to ECM	ECM function	Actuator
Crankshaft position sensor (POS) Camshaft position sensor (PHASE)	Engine speed*1	EVAP canister purge flow control	EVAP canister purge volume control solenoid valve
Mass air flow sensor	Amount of intake air		
Engine coolant temperature sensor	Engine coolant temperature		
Battery	Battery voltage*1		
Throttle position sensor	Throttle position		
Accelerator pedal position sensor	Accelerator pedal position		
Air fuel ratio (A/F) sensor 1	Density of oxygen in exhaust gas (Mixture ratio feedback signal)		
Fuel tank temperature sensor	Fuel temperature in fuel tank		
Wheel sensor	Vehicle speed*2		

*1: ECM determines the start signal status by the signals of engine speed and battery voltage.

*2: This signal is sent to the ECM through CAN communication line.

This system controls flow rate of fuel vapor from the EVAP canister. The opening of the vapor by-pass passage in the EVAP canister purge volume control solenoid valve changes to control the flow rate. The EVAP canister purge volume control solenoid valve repeats ON/OFF operation according to the signal sent from the ECM. The opening of the valve varies for optimum engine control. The optimum value stored in the ECM is determined by considering various engine conditions. When the engine is operating, the flow rate of fuel vapor from the EVAP canister is regulated as the air flow changes.

COMPONENT DESCRIPTION

The EVAP canister purge volume control solenoid valve uses a ON/OFF duty to control the flow rate of fuel vapor from the EVAP canister. The EVAP canister purge volume control solenoid valve is moved by ON/OFF pulses from the ECM. The longer the ON pulse, the greater the amount of fuel vapor that will flow through the valve.

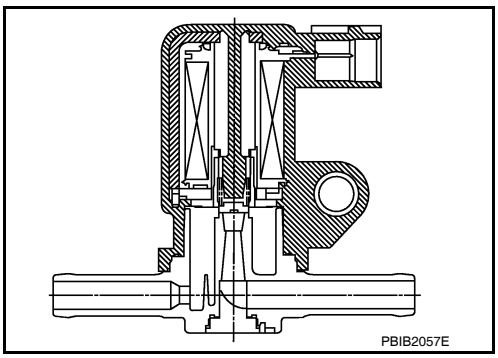

On Board Diagnosis Logic

INFOID:0000000001351590

DTC No.	Trouble diagnosis name	DTC detecting condition	Possible cause
P0444 0444	EVAP canister purge volume control solenoid valve circuit open	An excessively low voltage signal is sent to ECM through the valve	• Harness or connectors (The solenoid valve circuit is open or shorted.) • EVAP canister purge volume control solenoid valve
P0445 0445	EVAP canister purge volume control solenoid valve circuit shorted	An excessively high voltage signal is sent to ECM through the valve	• Harness or connectors (The solenoid valve circuit is shorted.) • EVAP canister purge volume control solenoid valve

DTC Confirmation Procedure

INFOID:0000000001351591

NOTE:
If DTC Confirmation Procedure has been previously conducted, always turn ignition switch OFF and wait at least 10 seconds before conducting the next test.
TESTING CONDITION:
Before performing the following procedure, confirm battery voltage is more than 11V at idle.

WITH CONSULT-III
1. Start engine and let it idle for at least 13 seconds.
2. Check 1st trip DTC.
3. If 1st trip DTC is detected, go to EC-237, "Diagnosis Procedure".

WITH GST
Follow the procedure “WITH CONSULT-III” above.

Diagnosis Procedure

INFOID:0000000001351593

1. CHECK EVAP CANISTER PURGE VOLUME CONTROL SOLENOID VALVE POWER SUPPLY CIRCUIT

1. Turn ignition switch OFF.
2. Disconnect EVAP canister purge volume control solenoid valve harness connector.
3. Turn ignition switch ON.

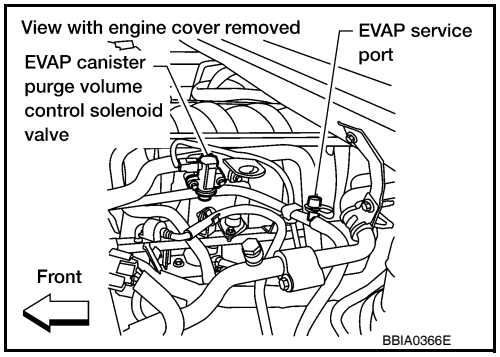

4. Check voltage between EVAP canister purge volume control solenoid valve terminal 1 and ground with CONSULT-III or tester.

Voltage: Battery voltage

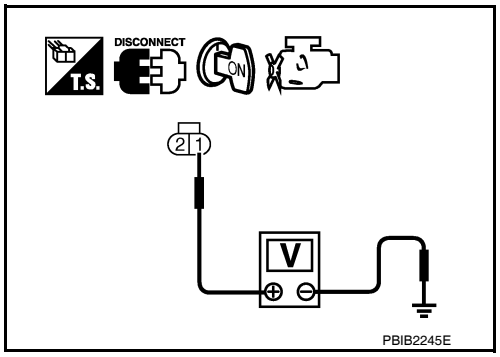

OK or NG
OK >> GO TO 3.
NG >> GO TO 2.

2. DETECT MALFUNCTIONING PART

Check the following.
- Harness connectors E2, F32
- Harness for open or short between EVAP canister purge volume control solenoid valve and IPDM E/R
- Harness for open or short between EVAP canister purge volume control solenoid valve and ECM

>> Repair harness or connectors.

3. CHECK EVAP CANISTER PURGE VOLUME CONTROL SOLENOID VALVE OUTPUT SIGNAL CIRCUIT FOR OPEN AND SHORT

1. Turn ignition switch OFF.
2. Disconnect ECM harness connector.
3. Check harness continuity between ECM terminal 45 and EVAP canister purge volume control solenoid valve terminal 2. Refer to Wiring Diagram.

Continuity should exist.

4. Also check harness for short to ground and short to power.

OK or NG

OK (With CONSULT-III)>>GO TO 4.
OK (Without CONSULT-III)>>GO TO 5.
NG >> Repair open circuit or short to ground or short to power in harness or connectors.

4. CHECK EVAP CANISTER PURGE VOLUME CONTROL SOLENOID VALVE OPERATION

With CONSULT-III

1. Reconnect all harness connectors disconnected.
2. Start engine.
3. Perform “PURG VOL CONT/V” in “ACTIVE TEST” mode with CONSULT-III. Check that engine speed varies according to the valve opening.

OK or NG

OK >> GO TO 6.
NG >> GO TO 5.

5. CHECK EVAP CANISTER PURGE VOLUME CONTROL SOLENOID VALVE

Refer to EC-238, "Component Inspection".

OK or NG

OK >> GO TO 6.
NG >> Replace EVAP canister purge volume control solenoid valve.

6. CHECK INTERMITTENT INCIDENT

Refer to GI-35, "How to Check Terminal" and GI-38, "Intermittent Incident".

>> **INSPECTION END**

Component Inspection

INFOID:0000000001351594

EVAP CANISTER PURGE VOLUME CONTROL SOLENOID VALVE

With CONSULT-III

Check air passage continuity of EVAP canister purge volume control solenoid valve under the following conditions.

Condition (PURG VOL CONT/V value)	Air passage continuity between A and B
100%	Yes
0%	No

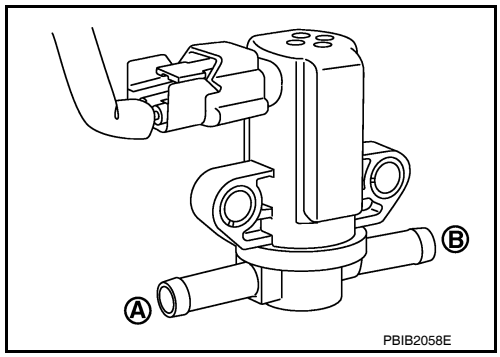

Without CONSULT-III

Check air passage continuity of EVAP canister purge volume control solenoid valve under the following conditions.

Condition	Air passage continuity between A and B
12V direct current supply between terminals 1 and 2	Yes
No supply	No

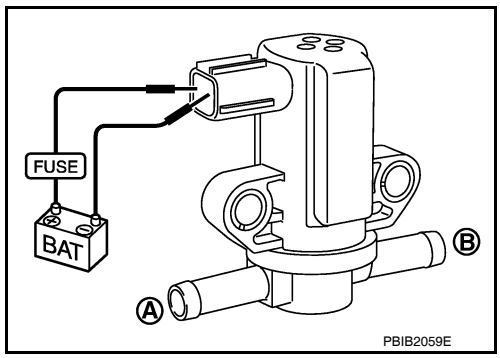

P0447 EVAP CANISTER VENT CONTROL VALVE

Component Description

INFOID:0000000001351596

The EVAP canister vent control valve is located on the EVAP canister and is used to seal the canister vent.
This solenoid valve responds to signals from the ECM. When the ECM sends an ON signal, the coil in the solenoid valve is energized. A plunger will then move to seal the canister vent. The ability to seal the vent is necessary for the on board diagnosis of other evaporative emission control system components.
This solenoid valve is used only for diagnosis, and usually remains opened.
When the vent is closed, under normal purge conditions, the evaporative emission control system is depressurized and allows EVAP Control System diagnosis.

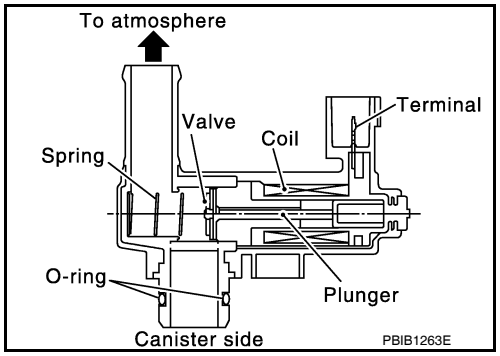

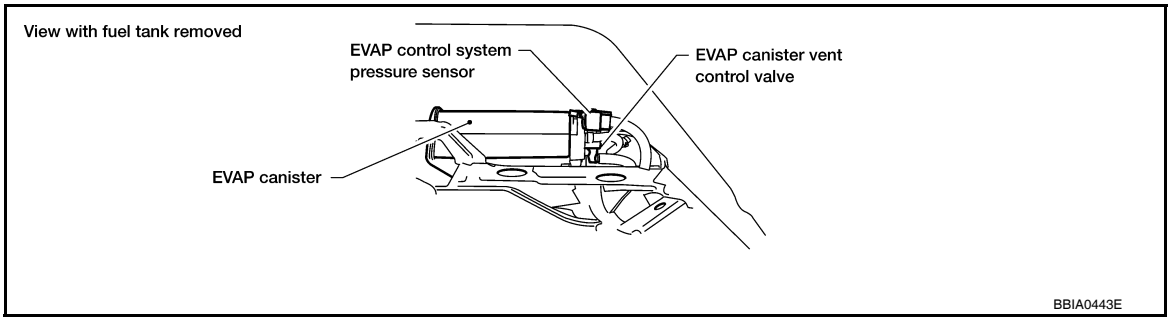

On Board Diagnosis Logic

INFOID:0000000001351598

DTC No.	Trouble diagnosis name	DTC detecting condition	Possible cause
P0447 0447	EVAP canister vent control valve circuit open	An improper voltage signal is sent to ECM through EVAP canister vent control valve.	• Harness or connectors (The valve circuit is open or shorted.) • EVAP canister vent control valve

DTC Confirmation Procedure

INFOID:0000000001351599

NOTE:
If DTC Confirmation Procedure has been previously conducted, always turn ignition switch OFF and wait at least 10 seconds before conducting the next test.
TESTING CONDITION:
Before performing the following procedure, confirm battery voltage is more than 11V at idle.

WITH CONSULT-III
1. Start engine and wait at least 8 seconds.
2. Check 1st trip DTC.
3. If 1st trip DTC is detected, go to EC-239, "Diagnosis Procedure".

WITH GST
Follow the procedure “WITH CONSULT-III” above.

Diagnosis Procedure

INFOID:0000000001351601

1. INSPECTION START

Do you have CONSULT-III?

Yes or No

Yes >> GO TO 2.
No >> GO TO 3.

2. CHECK EVAP CANISTER VENT CONTROL VALVE CIRCUIT

With CONSULT-III

1. Turn ignition switch OFF and then turn ON.
2. Select “VENT CONTROL/V” in “ACTIVE TEST” mode with CONSULT-III.
3. Touch “ON/OFF” on CONSULT-III screen.
4. Check for operating sound of the valve.
   Clicking noise should be heard.

OK or NG

OK >> GO TO 7.
NG >> GO TO 3.

3. CHECK EVAP CANISTER VENT CONTROL VALVE POWER SUPPLY CIRCUIT

1. Turn ignition switch OFF.
2. Disconnect EVAP canister vent control valve harness connector.

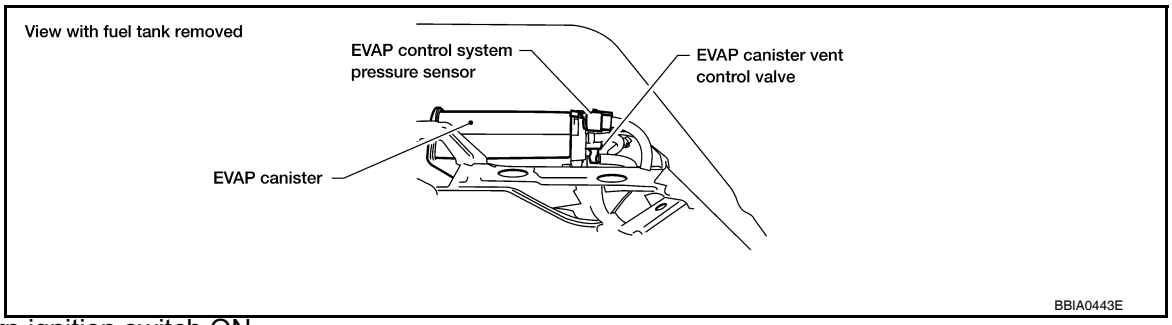

3. Turn ignition switch ON.
4. Check voltage between EVAP canister vent control valve terminal 2 and ground with CONSULT-III or tester.

Voltage: Battery voltage

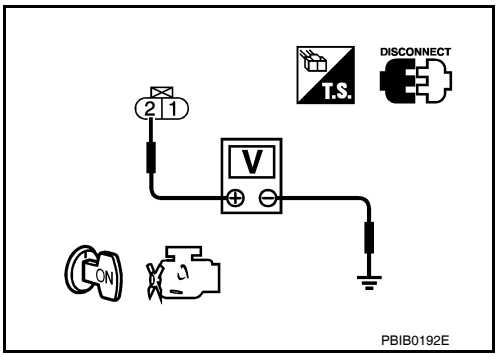

OK or NG

OK >> GO TO 5.
NG >> GO TO 4.

4. DETECT MALFUNCTIONING PART

Check the following.
- Harness connectors E41, C1
- Harness for open or short between EVAP canister vent control valve and IPDM E/R

>> Repair harness or connectors.

5. CHECK EVAP CANISTER VENT CONTROL VALVE OUTPUT SIGNAL CIRCUIT FOR OPEN AND SHORT

1. Turn ignition switch OFF.
2. Disconnect ECM harness connector.
3. Check harness continuity between ECM terminal 117 and EVAP canister vent control valve terminal 1. Refer to Wiring Diagram.

Continuity should exist.

4. Also check harness for short to ground and short to power.

OK or NG

OK >> GO TO 7.
NG >> GO TO 6.

6. DETECT MALFUNCTIONING PART

Check the following.
- Harness connectors E41, C1
- Harness for open or short between EVAP canister vent control valve and ECM

>> Repair open circuit or short to ground or short to power in harness or connectors.

7. CHECK RUBBER TUBE FOR CLOGGING

1. Disconnect rubber tube connected to EVAP canister vent control valve.
2. Check the rubber tube for clogging.

OK or NG

OK >> GO TO 8.
NG >> Clean the rubber tube using an air blower.

8. CHECK EVAP CANISTER VENT CONTROL VALVE

Refer to EC-241, "Component Inspection".

OK or NG

OK >> GO TO 9.
NG >> Replace EVAP canister vent control valve.

9. CHECK INTERMITTENT INCIDENT

Refer to GI-35, "How to Check Terminal" and GI-38, "Intermittent Incident".

>> **INSPECTION END**

Component Inspection

INFOID:0000000001351602

EVAP CANISTER VENT CONTROL VALVE

With CONSULT-III

1. Remove EVAP canister vent control valve from EVAP canister.
2. Check portion **B** of EVAP canister vent control valve for being rusted.
   If NG, replace EVAP canister vent control valve.
   If OK, go to next step.
3. Reconnect harness connectors disconnected.
4. Turn ignition switch ON.

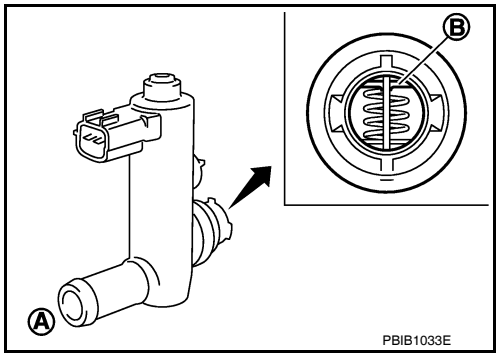

5. Perform “VENT CONTROL/V” in “ACTIVE TEST” mode.
6. Check air passage continuity and operation delay time.
   Make sure new O-ring is installed properly.

Condition VENT CONTROL/V	Air passage continuity between A and B
ON	No
OFF	Yes

Operation takes less than 1 second.
If NG, replace EVAP canister vent control valve.
If OK, go to next step.

7. Clean the air passage (portion **A** to **B**) of EVAP canister vent control valve using an air blower.
8. Perform step 6 again.

Without CONSULT-III

1. Remove EVAP canister vent control valve from EVAP canister.
2. Check portion **B** of EVAP canister vent control valve for being rusted.

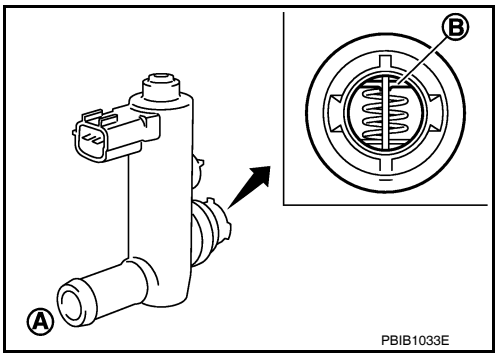

3. Check air passage continuity and operation delay time under the following conditions.
   Make sure new O-ring is installed properly.

Condition	Air passage continuity between A and B
12V direct current supply between terminals 1 and 2	No
OFF	Yes

   Operation takes less than 1 second.
   If NG, replace EVAP canister vent control valve.
   If OK, go to next step.

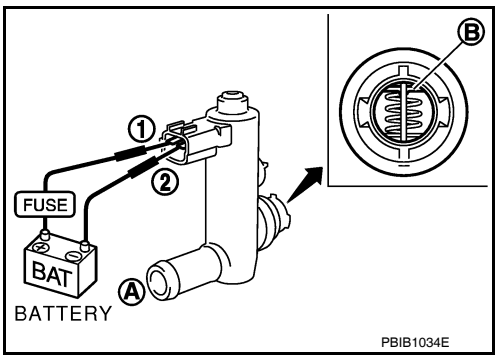

4. Clean the air passage (portion **A** to **B**) of EVAP canister vent control valve using an air blower.
5. Perform step 3 again.

P0448 EVAP CANISTER VENT CONTROL VALVE

Component Description

INFOID:0000000001351603

The EVAP canister vent control valve is located on the EVAP canister and is used to seal the canister vent.
This solenoid valve responds to signals from the ECM. When the ECM sends an ON signal, the coil in the solenoid valve is energized. A plunger will then move to seal the canister vent. The ability to seal the vent is necessary for the on board diagnosis of other evaporative emission control system components.
This solenoid valve is used only for diagnosis, and usually remains opened.
When the vent is closed, under normal purge conditions, the evaporative emission control system is depressurized and allows EVAP Control System diagnosis.

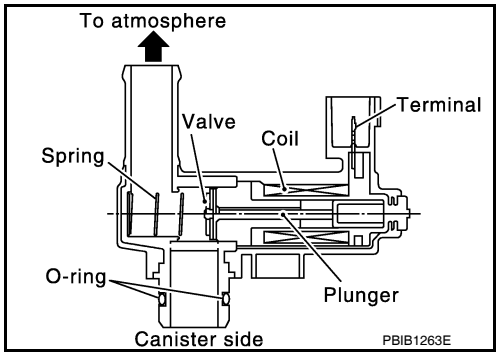

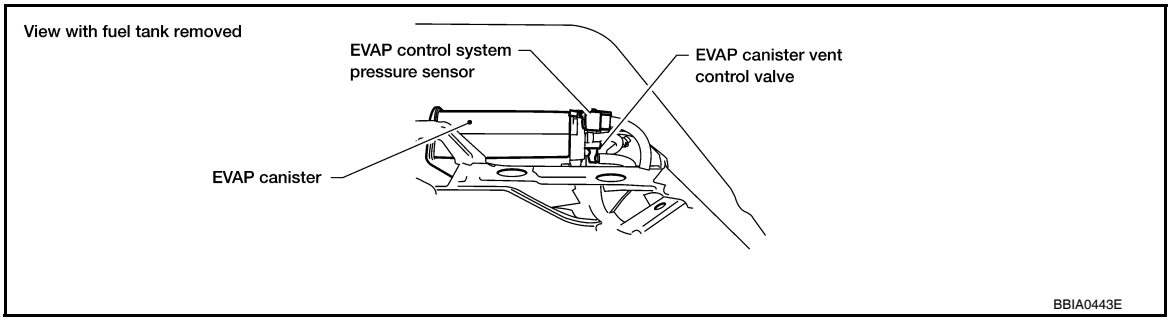

On Board Diagnosis Logic

INFOID:0000000001351605

DTC No.	Trouble diagnosis name	DTC detecting condition	Possible cause
P0448 0448	EVAP canister vent control valve close	EVAP canister vent control valve remains closed under specified driving conditions.	• EVAP canister vent control valve • EVAP control system pressure sensor and the circuit • Blocked rubber tube to EVAP canister vent control valve • EVAP canister is saturated with water

DTC Confirmation Procedure

INFOID:0000000001351606

NOTE:
If DTC Confirmation Procedure has been previously conducted, always turn ignition switch OFF and wait at least 10 seconds before conducting the next test.

WITH CONSULT-III

1. Turn ignition switch ON and wait at least 5 seconds.
2. Turn ignition switch OFF and wait at least 10 seconds.
3. Turn ignition switch ON and select “DATA MONITOR” mode with CONSULT-III.
4. Start engine and let it idle for at least 1 minute.
5. Repeat next procedures 3 times.

a. Increase the engine speed up to 3,000 to 3,500 rpm and keep it for 2 minutes and 50 seconds to 3 minutes.
Never exceed 3 minutes.
b. Fully released accelerator pedal and keep engine idle for about 5 seconds.

6. Check 1st trip DTC.
7. If 1st trip DTC is detected, go to EC-244, "Diagnosis Procedure".
If 1st trip DTC is not detected, go to the next step.
8. Repeat next procedure 20 times.

a. Quickly increase the engine speed up to 4,000 to 4,500 rpm or more and keep it for 25 to 30 seconds.
b. Fully released accelerator pedal and keep engine idle for at least 35 seconds.

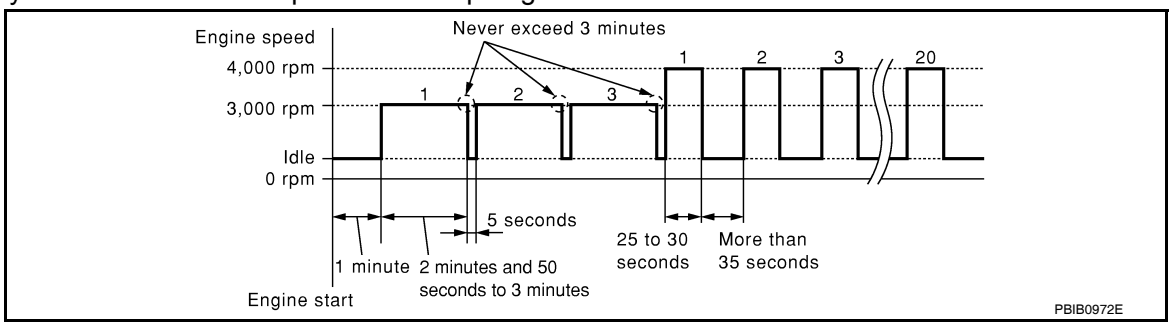

9. Check 1st trip DTC.
10. If 1st trip DTC is detected, go to EC-244, "Diagnosis Procedure".

WITH GST

Follow the procedure “WITH CONSULT-III” above.

Diagnosis Procedure

INFOID:0000000001351608

1. CHECK RUBBER TUBE

1. Turn ignition switch OFF.
2. Disconnect rubber tube connected to EVAP canister vent control valve.

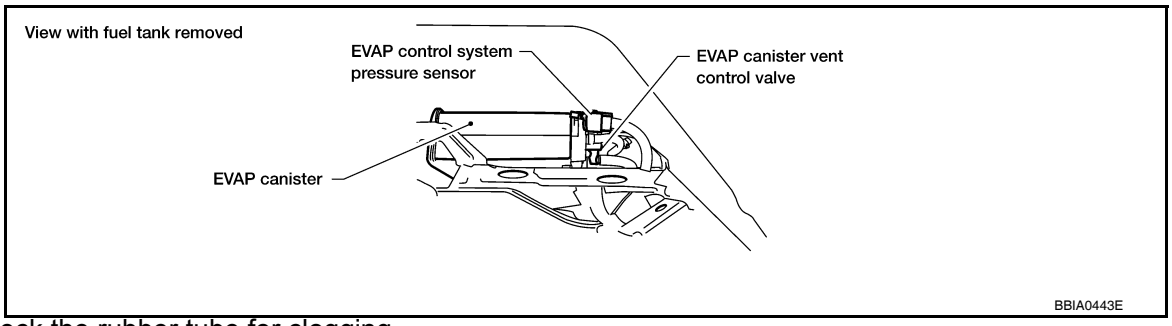

3. Check the rubber tube for clogging.

OK or NG

OK >> GO TO 2.
NG >> Clean rubber tube using an air blower.

2. CHECK EVAP CANISTER VENT CONTROL VALVE

Refer to EC-245, "Component Inspection".

OK or NG

OK >> GO TO 3.
NG >> Replace EVAP canister vent control valve.

3. CHECK IF EVAP CANISTER SATURATED WITH WATER

1. Remove EVAP canister with EVAP canister vent control valve and EVAP control system pressure sensor attached.
2. Check if water will drain from the EVAP canister.

Yes or No

Yes >> GO TO 4.
No >> GO TO 6.

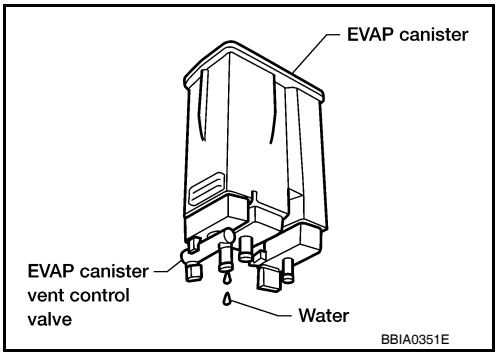

4. CHECK EVAP CANISTER

Weigh the EVAP canister with the EVAP canister vent control valve and EVAP control system pressure sensor attached.

The weight should be less than 2.5 kg (5.5 lb).

OK or NG

OK >> GO TO 6.
NG >> GO TO 5.

5. DETECT MALFUNCTIONING PART

Check the following.
- EVAP canister for damage
- EVAP hose between EVAP canister and vehicle frame for clogging or poor connection

>> Repair hose or replace EVAP canister.

6. CHECK EVAP CONTROL SYSTEM PRESSURE SENSOR CONNECTOR

1. Disconnect EVAP control system pressure sensor harness connector.
2. Check connectors for water.

Water should not exist.

OK or NG

OK >> GO TO 7.
NG >> Replace EVAP control system pressure sensor.

7. CHECK EVAP CONTROL SYSTEM PRESSURE SENSOR

Refer to EC-248, "Component Inspection".

OK or NG

OK >> GO TO 8.
NG >> Replace EVAP control system pressure sensor.

8. CHECK INTERMITTENT INCIDENT

Refer to GI-35, "How to Check Terminal" and GI-38, "Intermittent Incident".

>> **INSPECTION END**

Component Inspection

INFOID:0000000001351609

EVAP CANISTER VENT CONTROL VALVE

With CONSULT-III

1. Remove EVAP canister vent control valve from EVAP canister.
2. Check portion **B** of EVAP canister vent control valve for being rusted.
   If NG, replace EVAP canister vent control valve.
   If OK, go to next step.
3. Reconnect harness connectors disconnected.
4. Turn ignition switch ON.

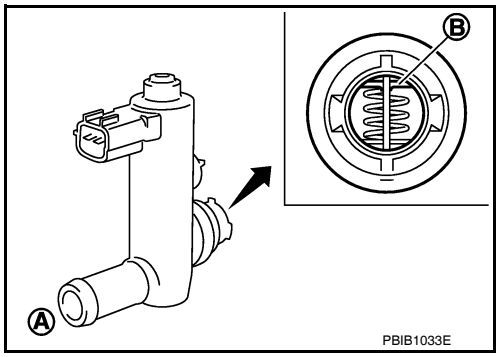

5. Perform “VENT CONTROL/V” in “ACTIVE TEST” mode.
6. Check air passage continuity and operation delay time.
   Make sure that new O-ring is installed properly.

Condition VENT CONTROL/V	Air passage continuity between A and B
ON	No
OFF	Yes

Operation takes less than 1 second.

If NG, replace EVAP canister vent control valve.
If OK, go to next step.

7. Clean the air passage (Portion **A** to **B**) of EVAP canister vent control valve using an air blower.
8. Perform step 6 again.

Without CONSULT-III

1. Remove EVAP canister vent control valve from EVAP canister.
2. Check portion **B** of EVAP canister vent control valve for being rusted.

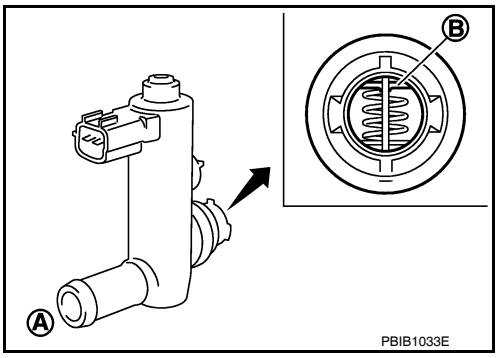

3. Check air passage continuity and operation delay time under the following conditions.
   Make sure that new O-ring is installed properly.

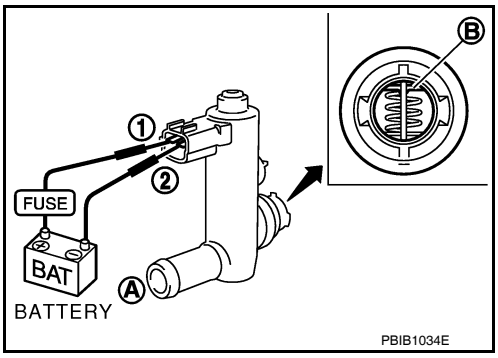

Condition	Air passage continuity between A and B
12V direct current supply between terminals 1 and 2	No
OFF	Yes

Operation takes less than 1 second.

If NG, replace EVAP canister vent control valve.
If OK, go to next step.

4. Clean the air passage (Portion **A** to **B**) of EVAP canister vent control valve using an air blower.
5. Perform step 3 again.

P0451 EVAP CONTROL SYSTEM PRESSURE SENSOR

Component Description

INFOID:0000000001351610

The EVAP control system pressure sensor detects pressure in the purge line. The sensor output voltage to the ECM increases as pressure increases.

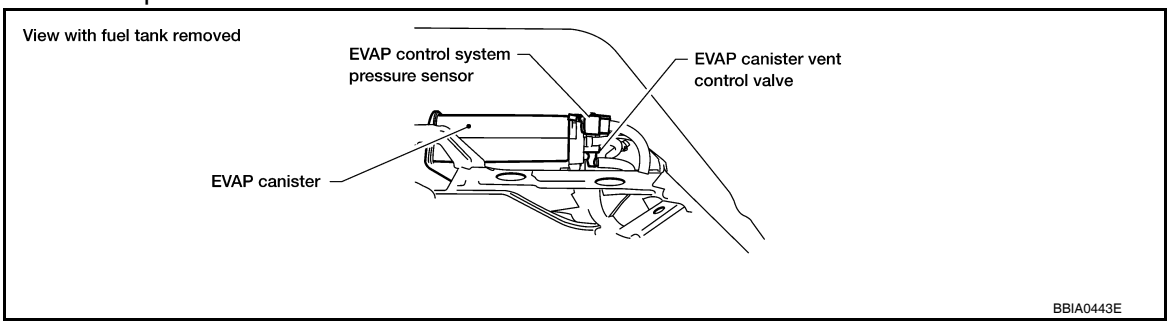

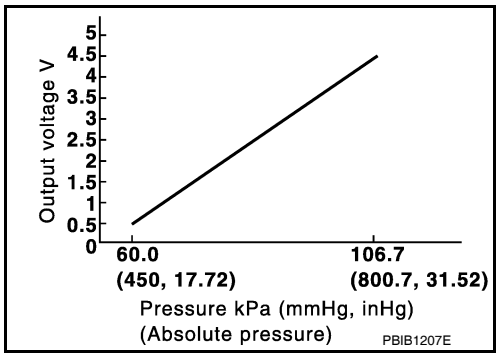

On Board Diagnosis Logic

INFOID:0000000001351612

NOTE:
If DTC P0451 is displayed with DTC P0643, first perform the trouble diagnosis for DTC P0643. Refer to EC-293.

DTC No.	Trouble diagnosis name	DTC detecting condition	Possible cause
P0451 0451	EVAP control system pressure sensor performance	ECM detects a sloshing signal from the EVAP control system pressure sensor	• Harness or connectors • EVAP control system pressure sensor

DTC Confirmation Procedure

INFOID:0000000001351613

NOTE:
If DTC Confirmation Procedure has been previously conducted, always turn ignition switch OFF and wait at least 10 seconds before conducting the next test.

WITH CONSULT-III

1. Start engine and wait at least 40 seconds.
   NOTE:
   Do not depress accelerator pedal even slightly.
2. Check 1st trip DTC.
3. If 1st trip DTC is detected, go to EC-247, "Diagnosis Procedure".

WITH GST

Follow the procedure “WITH CONSULT-III” above.

Diagnosis Procedure

INFOID:0000000001351614

1.CHECK GROUND CONNECTIONS

1. Turn ignition switch OFF.
2. Loosen and retighten three ground screws on the body.
   Refer to EC-86, "Ground Inspection".

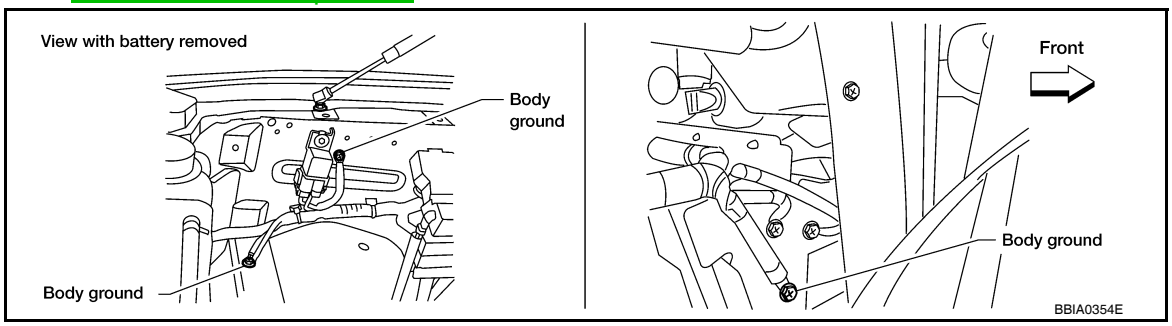

OK or NG

OK >> GO TO 2.
NG >> Repair or replace ground connections.

2. CHECK EVAP CONTROL SYSTEM PRESSURE SENSOR CONNECTOR FOR WATER

1. Disconnect EVAP control system pressure sensor harness connector.

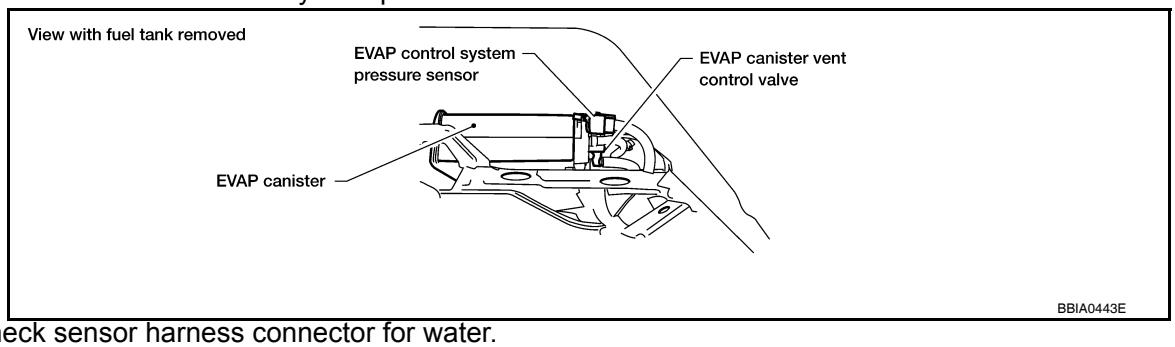

2. Check sensor harness connector for water.

Water should not exist.

OK or NG

OK >> GO TO 3.
NG >> Repair or replace harness connector.

3. CHECK EVAP CONTROL SYSTEM PRESSURE SENSOR

Refer to EC-248, "Component Inspection".

OK or NG

OK >> GO TO 4.
NG >> Replace EVAP control system pressure sensor.

4. CHECK INTERMITTENT INCIDENT

Refer to GI-35, "How to Check Terminal" and GI-38, "Intermittent Incident".
For wiring diagram, refer to EC-251, "Diagnosis Procedure".

>> **INSPECTION END**

Component Inspection

INFOID:0000000001351615

EVAP CONTROL SYSTEM PRESSURE SENSOR

1. Remove EVAP control system pressure sensor with its harness connector connected from EVAP canister.
   Always replace O-ring with a new one.
2. Install a vacuum pump to EVAP control system pressure sensor.

3. Turn ignition switch ON and check output voltage between ECM terminal 32 and ground under the following conditions.

Applied vacuum kPa (mmHg, inHg)	Voltage V
Not applied	1.8 - 4.8
-26.7 (-200, -7.87)	2.1 to 2.5V lower than above value

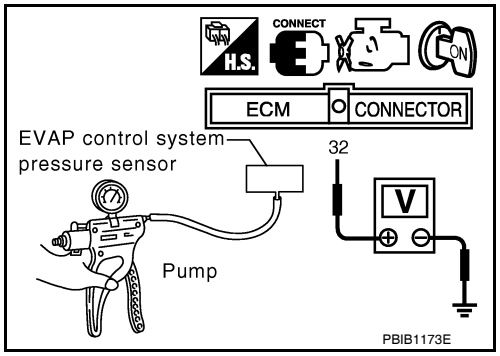

CAUTION:
- **Always calibrate the vacuum pump gauge when using it.**
- **Do not apply below -93.3 kPa (-700 mmHg, -27.56 inHg) or pressure over 101.3 kPa (760 mmHg, 29.92 inHg).**

4. If NG, replace EVAP control system pressure sensor.

P0452 EVAP CONTROL SYSTEM PRESSURE SENSOR

Component Description

INFOID:0000000001351616

The EVAP control system pressure sensor detects pressure in the purge line. The sensor output voltage to the ECM increases as pressure increases.

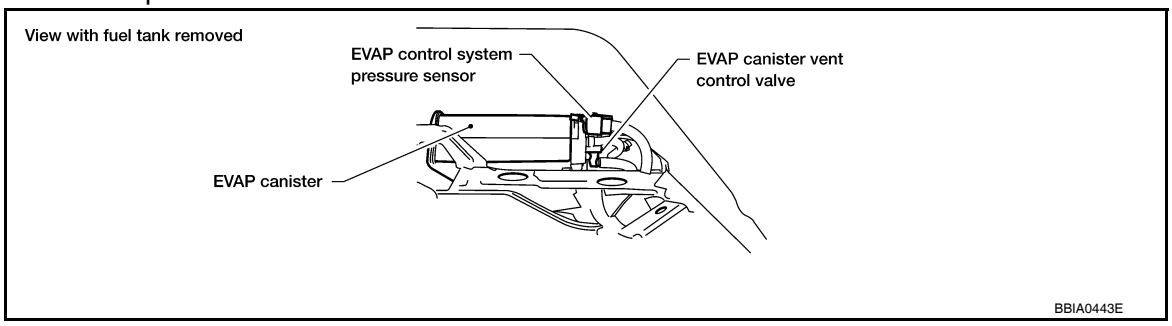

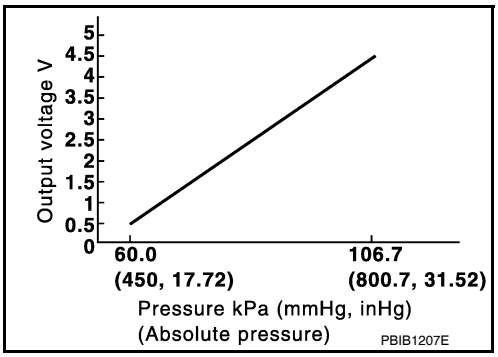

On Board Diagnosis Logic

INFOID:0000000001351618

NOTE:
If DTC P0452 is displayed with DTC P0643, first perform the trouble diagnosis for DTC P0643. Refer to EC-293.

DTC No.	Trouble diagnosis name	DTC detecting condition	Possible cause
P0452 0452	EVAP control system pressure sensor low input	An excessively low voltage from the sensor is sent to ECM.	• Harness or connectors (The sensor circuit is open or shorted.) • EVAP control system pressure sensor

DTC Confirmation Procedure

INFOID:0000000001351619

NOTE:
If DTC Confirmation Procedure has been previously conducted, always turn ignition switch OFF and wait at least 10 seconds before conducting the next test.
TESTING CONDITION:
Always perform test at a temperature of 5°C (41°F) or more.

WITH CONSULT-III

1. Start engine and warm it up to normal operating temperature.
2. Turn ignition switch OFF and wait at least 10 seconds.
3. Turn ignition switch ON.
4. Select “DATA MONITOR” mode with CONSULT-III.
5. Make sure that “FUEL T/TMP SE” is more than 0°C (32°F).
6. Start engine and wait at least 20 seconds.
7. Check 1st trip DTC.
8. If 1st trip DTC is detected, go to EC-251, "Diagnosis Procedure".

WITH GST

1. Start engine and warm it up to normal operating temperature.
2. Check that voltage between ECM terminal 107 (Fuel tank temperature sensor signal) and ground is less than 4.2V.
3. Turn ignition switch OFF and wait at least 10 seconds.
4. Start engine and wait at least 20 seconds.
5. Select Service $07 with GST.
   If 1st trip DTC is detected, go to EC-251, "Diagnosis Procedure".

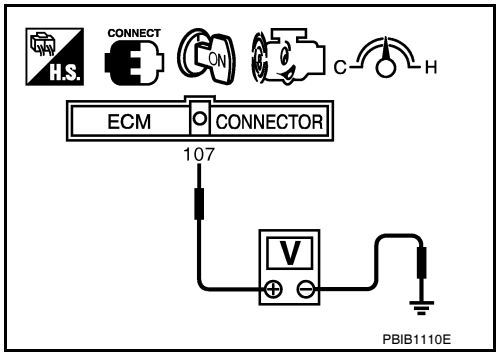

Diagnosis Procedure

INFOID:0000000001351621

1. CHECK GROUND CONNECTIONS

1. Turn ignition switch OFF.
2. Loosen and retighten three ground screws on the body.
   Refer to EC-86, "Ground Inspection".

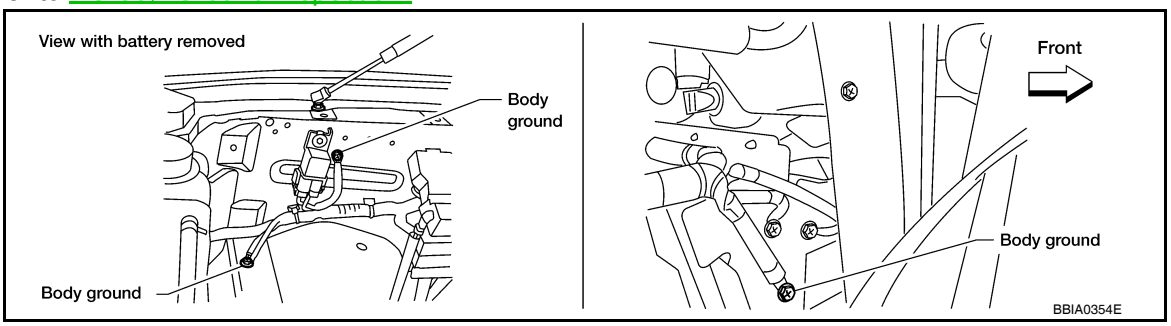

OK or NG

OK >> GO TO 2.
NG >> Repair or replace ground connections.

2. CHECK CONNECTOR

1. Disconnect EVAP control system pressure sensor harness connector.

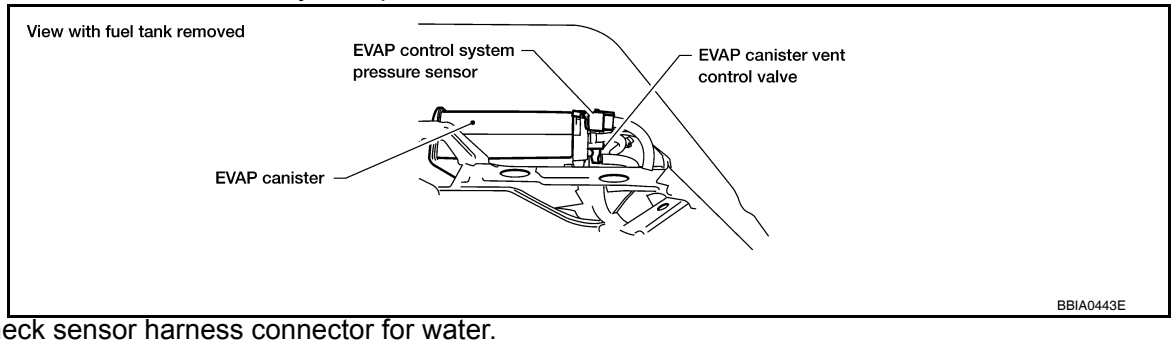

2. Check sensor harness connector for water.

Water should not exist.

OK or NG

OK >> GO TO 3.
NG >> Repair or replace harness connector.

3. CHECK EVAP CONTROL SYSTEM PRESSURE SENSOR POWER SUPPLY CIRCUIT

1. Turn ignition switch ON.

2. Check voltage between EVAP control system pressure sensor terminal 3 and ground with CONSULT-III or tester.

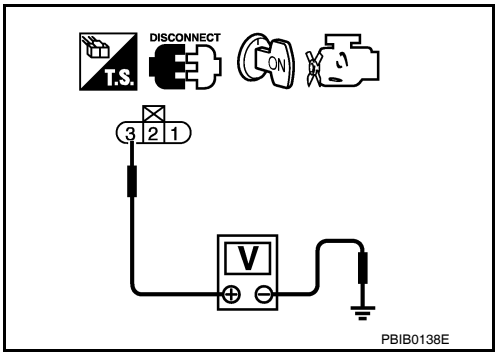

Voltage: Approximately 5V

OK or NG

OK >> GO TO 5.
NG >> GO TO 4.

4. DETECT MALFUNCTIONING PART

Check the following.
- Harness connectors C1, E41
- Harness connectors E5, F14
- Harness for open or short between EVAP control system pressure sensor and ECM

>> Repair open circuit or short to ground or short to power in harness or connectors.

5. CHECK EVAP CONTROL SYSTEM PRESSURE SENSOR GROUND CIRCUIT FOR OPEN AND SHORT

1. Turn ignition switch OFF.
2. Disconnect ECM harness connector.
3. Check harness continuity between EVAP control system pressure sensor terminal 1 and ECM terminal 67.
   Refer to Wiring Diagram.

Continuity should exist.

4. Also check harness for short to ground and short to power.

OK or NG

OK >> GO TO 7.
NG >> GO TO 6.

6. DETECT MALFUNCTIONING PART

Check the following.
- Harness connectors C1, E41
- Harness connectors E5, F14
- Harness for open or short between EVAP control system pressure sensor and ECM

>> Repair open circuit or short to ground or short to power in harness or connectors.

7. CHECK EVAP CONTROL SYSTEM PRESSURE SENSOR INPUT SIGNAL CIRCUIT FOR OPEN AND SHORT

1. Check harness continuity between ECM terminal 32 and EVAP control system pressure sensor terminal 2.
   Refer to Wiring Diagram.

Continuity should exist.

2. Also check harness for short to ground and short to power.

OK or NG

OK >> GO TO 9.
NG >> GO TO 8.

8. DETECT MALFUNCTIONING PART

Check the following.
- Harness connectors C1, E41
- Harness connectors E5, F14

- Harness for open or short between EVAP control system pressure sensor and ECM

>> Repair open circuit or short to ground or short to power in harness or connectors.

9. CHECK EVAP CONTROL SYSTEM PRESSURE SENSOR

Refer to EC-253, "Component Inspection".

OK or NG

OK >> GO TO 10.
NG >> Replace EVAP control system pressure sensor.

10. CHECK INTERMITTENT INCIDENT

Refer to GI-35, "How to Check Terminal" and GI-38, "Intermittent Incident".

>> **INSPECTION END**

Component Inspection

INFOID:0000000001351622

EVAP CONTROL SYSTEM PRESSURE SENSOR

1. Remove EVAP control system pressure sensor with its harness connector connected from EVAP canister. **Always replace O-ring with a new one.**
2. Install a vacuum pump to EVAP control system pressure sensor.
3. Turn ignition switch ON and check output voltage between ECM terminal 32 and ground under the following conditions.

Applied vacuum kPa (mmHg, inHg)	Voltage V
Not applied	1.8 - 4.8
-26.7 (-200, -7.87)	2.1 to 2.5V lower than above value

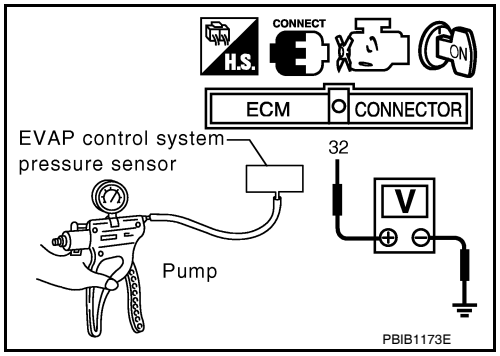

CAUTION:
- **Always calibrate the vacuum pump gauge when using it.**
- **Do not apply below -93.3 kPa (-700 mmHg, -27.56 inHg) or pressure over 101.3 kPa (760 mmHg, 29.92 inHg).**

4. If NG, replace EVAP control system pressure sensor.

P0453 EVAP CONTROL SYSTEM PRESSURE SENSOR

Component Description

INFOID:0000000001351623

The EVAP control system pressure sensor detects pressure in the purge line. The sensor output voltage to the ECM increases as pressure increases.

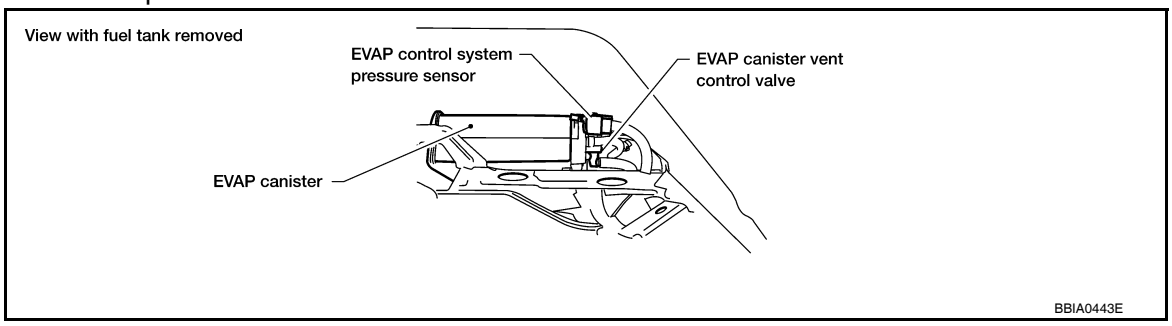

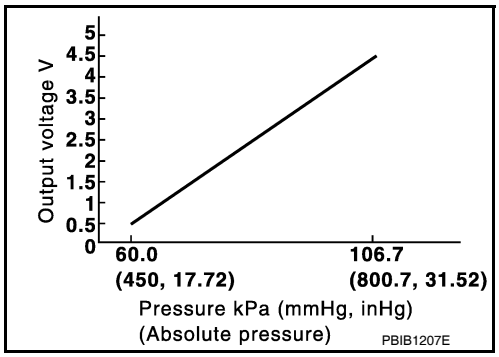

On Board Diagnosis Logic

INFOID:0000000001351625

NOTE:
If DTC P0453 is displayed with DTC P0643, first perform the trouble diagnosis for DTC P0643. Refer to EC-293.

DTC No.	Trouble diagnosis name	DTC detecting condition	Possible cause
P0453 0453	EVAP control system pressure sensor high input	An excessively high voltage from the sensor is sent to ECM.	• Harness or connectors (The sensor circuit is open or shorted.) • EVAP control system pressure sensor • EVAP canister vent control valve • EVAP canister • Rubber hose from EVAP canister vent control valve to vehicle frame

DTC Confirmation Procedure

INFOID:0000000001351626

NOTE:
If DTC Confirmation Procedure has been previously conducted, always turn ignition switch OFF and wait at least 10 seconds before conducting the next test.
TESTING CONDITION:
Always perform test at a temperature of 5°C (41°F) or more.

WITH CONSULT-III

1. Start engine and warm it up to normal operating temperature.
2. Turn ignition switch OFF and wait at least 10 seconds.
3. Turn ignition switch ON.
4. Select “DATA MONITOR” mode with CONSULT-III.
5. Make sure that “FUEL T/TMP SE” is more than 0°C (32°F).

6. Start engine and wait at least 20 seconds.
7. Check 1st trip DTC.
8. If 1st trip DTC is detected, go to EC-255, "Diagnosis Procedure".

WITH GST

1. Start engine and warm it up to normal operating temperature.
2. Check that voltage between ECM terminal 107 (Fuel tank temperature sensor signal) and ground is less than 4.2V.
3. Turn ignition switch OFF and wait at least 10 seconds.
4. Start engine and wait at least 20 seconds.
5. Select Service $07 with GST.
   If 1st trip DTC is detected, go to EC-255, "Diagnosis Procedure".

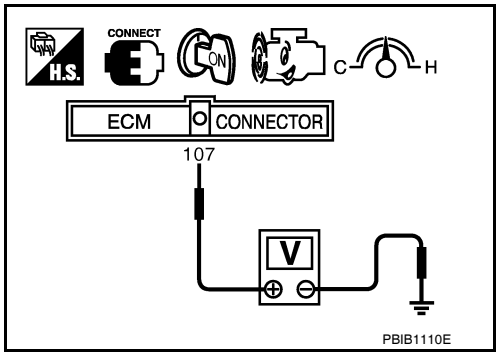

Diagnosis Procedure

INFOID:0000000001351628

1. CHECK GROUND CONNECTIONS

1. Turn ignition switch OFF.
2. Loosen and retighten three ground screws on the body.
   Refer to EC-86, "Ground Inspection".

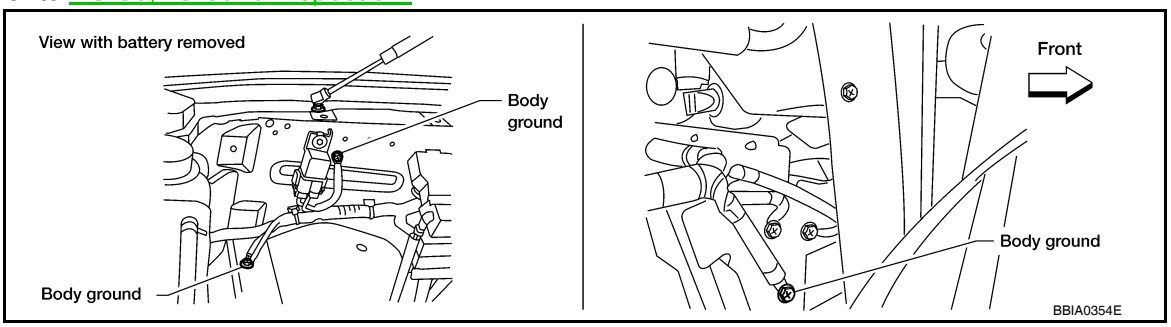

OK or NG

OK >> GO TO 2.
NG >> Repair or replace ground connections.

2. CHECK CONNECTOR

1. Disconnect EVAP control system pressure sensor harness connector.

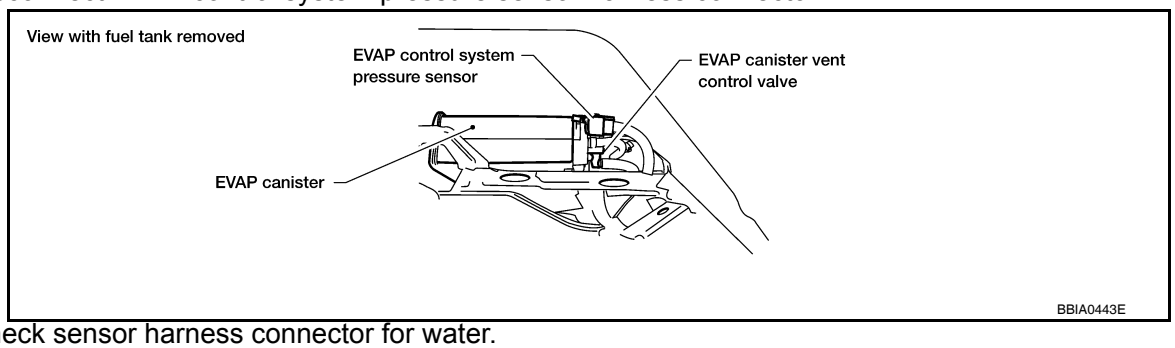

2. Check sensor harness connector for water.

Water should not exist.

OK or NG

OK >> GO TO 3.
NG >> Repair or replace harness connector.

3. CHECK EVAP CONTROL SYSTEM PRESSURE SENSOR POWER SUPPLY CIRCUIT

1. Turn ignition switch ON.
2. Check voltage between EVAP control system pressure sensor terminal 3 and ground with CONSULT-III or tester.

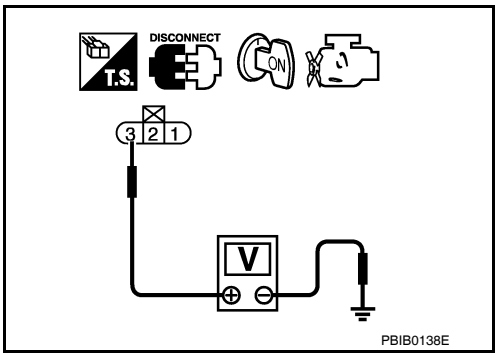

Voltage: Approximately 5V

OK or NG

OK >> GO TO 5.
NG >> GO TO 4.

4. DETECT MALFUNCTIONING PART

Check the following.
- Harness connectors C1, E41
- Harness connectors E5, F14
- Harness for open or short between EVAP control system pressure sensor and ECM

>> Repair open circuit or short to ground or short to power in harness or connectors.

5. CHECK EVAP CONTROL SYSTEM PRESSURE SENSOR GROUND CIRCUIT FOR OPEN AND SHORT

1. Turn ignition switch OFF.
2. Disconnect ECM harness connector.
3. Check harness continuity between EVAP control system pressure sensor terminal 1 and ECM terminal 67.
   Refer to Wiring Diagram.

Continuity should exist.

4. Also check harness for short to ground and short to power.

OK or NG

OK >> GO TO 7.
NG >> GO TO 6.

6. DETECT MALFUNCTIONING PART

Check the following.
- Harness connectors C1, E41
- Harness connectors E5, F14
- Harness for open or short between EVAP control system pressure sensor and ECM

>> Repair open circuit or short to ground or short to power in harness or connectors.

7. CHECK EVAP CONTROL SYSTEM PRESSURE SENSOR INPUT SIGNAL CIRCUIT FOR OPEN AND SHORT

1. Check harness continuity between ECM terminal 32 and EVAP control system pressure sensor terminal 2.
   Refer to Wiring Diagram.

Continuity should exist.

2. Also check harness for short to ground and short to power.

OK or NG

OK >> GO TO 9.
NG >> GO TO 8.

8. DETECT MALFUNCTIONING PART

Check the following.
- Harness connectors C1, E41

- Harness connectors E5, F14
- Harness for open or short between EVAP control system pressure sensor and ECM

>> Repair open circuit or short to ground or short to power in harness or connectors.

9. CHECK RUBBER TUBE

1. Disconnect rubber tube connected to EVAP canister vent control valve.
2. Check the rubber tube for clogging, vent or kinked.

OK or NG

OK >> GO TO 10.
NG >> Clean the rubber tube using an air blower, repair or replace rubber tube.

10. CHECK EVAP CANISTER VENT CONTROL VALVE

Refer to EC-241, "Component Inspection".

OK or NG

OK >> GO TO 11.
NG >> Replace EVAP canister vent control valve.

11. CHECK EVAP CONTROL SYSTEM PRESSURE SENSOR

Refer to EC-258, "Component Inspection".

OK or NG

OK >> GO TO 12.
NG >> Replace EVAP control system pressure sensor.

12. CHECK IF EVAP CANISTER SATURATED WITH WATER

1. Remove EVAP canister with EVAP canister vent control valve and EVAP control system pressure sensor attached.
2. Check if water will drain from the EVAP canister.

Yes or No

Yes >> GO TO 13.
No >> GO TO 15.

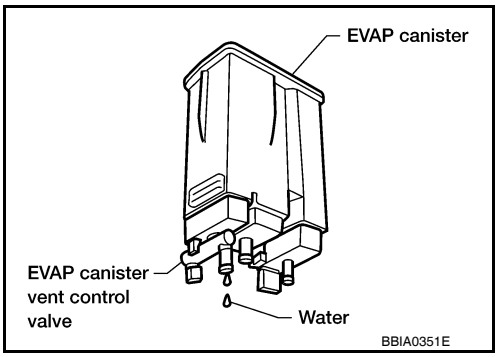

13. CHECK EVAP CANISTER

Weigh the EVAP canister with the EVAP canister vent control valve and EVAP control system pressure sensor attached.

The weight should be less than 2.5 kg (5.5 lb).

OK or NG

OK >> GO TO 15.
NG >> GO TO 14.

14. DETECT MALFUNCTIONING PART

Check the following.

- EVAP canister for damage
- EVAP hose between EVAP canister and vehicle frame for clogging or poor connection

>> Repair hose or replace EVAP canister.

15. CHECK INTERMITTENT INCIDENT

Refer to GI-35, "How to Check Terminal" and GI-38, "Intermittent Incident".

>> **INSPECTION END**

Component Inspection

INFOID:0000000001351629

EVAP CONTROL SYSTEM PRESSURE SENSOR

1. Remove EVAP control system pressure sensor with its harness connector connected from EVAP canister. **Always replace O-ring with a new one.**
2. Install a vacuum pump to EVAP control system pressure sensor.
3. Turn ignition switch ON and check output voltage between ECM terminal 32 and ground under the following conditions.

Applied vacuum kPa (mmHg, inHg)	Voltage V
Not applied	1.8 - 4.8
-26.7 (-200, -7.87)	2.1 to 2.5V lower than above value

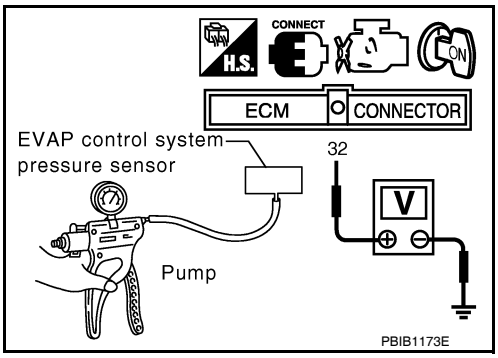

CAUTION:
- **Always calibrate the vacuum pump gauge when using it.**
- **Do not apply below -93.3 kPa (-700 mmHg, -27.56 inHg) or pressure over 101.3 kPa (760 mmHg, 29.92 inHg).**

4. If NG, replace EVAP control system pressure sensor.

P0455 EVAP CONTROL SYSTEM

On Board Diagnosis Logic

INFOID:0000000001351630

This diagnosis detects a very large leak (fuel filler cap fell off etc.) in EVAP system between the fuel tank and EVAP canister purge volume control solenoid valve.

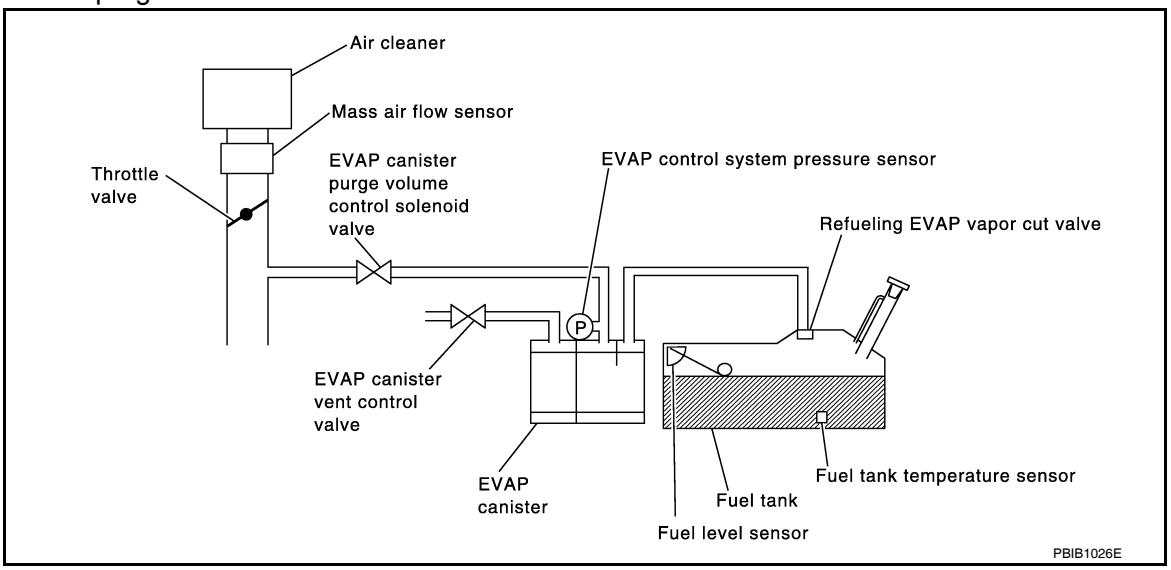

DTC No.	Trouble diagnosis name	DTC detecting condition	Possible cause
P0455 0455	EVAP control system gross leak detected	EVAP control system has a very large leak such as fuel filler cap fell off, EVAP control system does not operate properly.	• Fuel filler cap remains open or fails to close. • Incorrect fuel tank vacuum relief valve • Incorrect fuel filler cap used • Foreign matter caught in fuel filler cap. • Leak is in line between intake manifold and EVAP canister purge volume control solenoid valve. • Foreign matter caught in EVAP canister vent control valve. • EVAP canister or fuel tank leaks • EVAP purge line (pipe and rubber tube) leaks • EVAP purge line rubber tube bent. • Loose or disconnected rubber tube • EVAP canister vent control valve and the circuit • EVAP canister purge volume control solenoid valve and the circuit • Fuel tank temperature sensor • O-ring of EVAP canister vent control valve is missing or damaged. • EVAP control system pressure sensor • Refueling EVAP vapor cut valve • ORVR system leaks

CAUTION:
- **Use only a genuine NISSAN fuel filler cap as a replacement. If an incorrect fuel filler cap is used, the MIL may come on.**
- **If the fuel filler cap is not tightened properly, the MIL may come on.**
- **Use only a genuine NISSAN rubber tube as a replacement.**

DTC Confirmation Procedure

INFOID:0000000001351631

CAUTION:
Never remove fuel filler cap during the DTC Confirmation Procedure.
NOTE:

- **Make sure that EVAP hoses are connected to EVAP canister purge volume control solenoid valve properly.**
- If DTC Confirmation Procedure has been previously conducted, always turn ignition switch OFF and wait at least 10 seconds before conducting the next test.

TESTING CONDITION:

- **Perform "DTC WORK SUPPORT" when the fuel level is between 1/4 and 3/4 full, and vehicle is placed on flat level surface.**
- **Open engine hood before conducting the following procedures.**

WITH CONSULT-III

1. Tighten fuel filler cap securely until ratcheting sound is heard.
2. Turn ignition switch ON.
3. Turn ignition switch OFF and wait at least 10 seconds.
4. Turn ignition switch ON and select "DATA MONITOR" mode with CONSULT-III.
5. Make sure that the following conditions are met.
   COOLAN TEMP/S: 0 - 70°C (32 - 158°F)
   INT/A TEMP SE: 0 - 60°C (32 - 140°F)
6. Select "EVP SML LEAK P0442/P1442" of "EVAPORATIVE SYSTEM" in "DTC WORK SUPPORT" mode with CONSULT-III.
   Follow the instruction displayed.
   NOTE:
   If the engine speed cannot be maintained within the range displayed on the CONSULT-III screen, go to EC-13, "Basic Inspection".
7. Make sure that "OK" is displayed.
   If "NG" is displayed, select "SELF-DIAG RESULTS" mode and make sure that "EVAP GROSS LEAK [P0455]" is displayed. If it is displayed, refer to EC-260, "Diagnosis Procedure".
   If P0442 is displayed, perform Diagnostic Procedure for DTC P0442, EC-225, "Diagnosis Procedure".

WITH GST

NOTE:

Be sure to read the explanation of EC-462, "DTC Index" before driving vehicle.

1. Start engine.
2. Drive vehicle according to EC-462, "DTC Index".
3. Stop vehicle.
4. Turn ignition switch OFF, wait at least 10 seconds and then turn ON.
5. Select Service $07 with GST.
   - If P0441 is displayed on the screen, go to EC-220, "Diagnosis Procedure".
   - If P0442 is displayed on the screen, go to EC-225, "Diagnosis Procedure".
   - If P0455 is displayed on the screen, go to EC-260, "Diagnosis Procedure".

Diagnosis Procedure

INFOID:0000000001351632

1. CHECK FUEL FILLER CAP DESIGN

1. Turn ignition switch OFF.
2. Check for genuine NISSAN fuel filler cap design.

OK or NG

OK >> GO TO 2.
NG >> Replace with genuine NISSAN fuel filler cap.

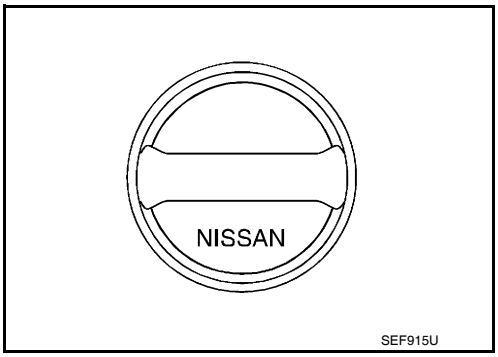

2. CHECK FUEL FILLER CAP INSTALLATION

Check that the cap is tightened properly by rotating the cap clockwise.

OK or NG

OK >> GO TO 3.
NG >> 1. Open fuel filler cap, then clean cap and fuel filler neck threads using air blower.
2. Retighten until ratcheting sound is heard.

3. CHECK FUEL FILLER CAP FUNCTION

Check for air releasing sound while opening the fuel filler cap.

OK or NG

OK >> GO TO 5.
NG >> GO TO 4.

4. CHECK FUEL TANK VACUUM RELIEF VALVE

Refer to EC-272, "Component Inspection".

OK or NG

OK >> GO TO 5.
NG >> Replace fuel filler cap with a genuine one.

5. CHECK EVAP PURGE LINE

Check EVAP purge line (pipe, rubber tube, fuel tank and EVAP canister) for cracks, improper connection or disconnection.
Refer to EC-37, "Description".

OK or NG

OK >> GO TO 6.
NG >> Repair or reconnect the hose.

6. CLEAN EVAP PURGE LINE

Clean EVAP purge line (pipe and rubber tube) using air blower.

>> GO TO 7.

7. CHECK EVAP CANISTER VENT CONTROL VALVE

Check the following.
- EVAP canister vent control valve is installed properly.
  Refer to EC-498, "Removal and Installation".
- EVAP canister vent control valve.
  Refer to EC-241, "Component Inspection".

OK or NG

OK >> GO TO 8.
NG >> Repair or replace EVAP canister vent control valve and O-ring.

8. INSTALL THE PRESSURE PUMP

To locate the EVAP leak, install EVAP service port adapter and pressure pump to EVAP service port securely.
NOTE:
Improper installation of the EVAP service port adapter to the EVAP service port may cause leaking.

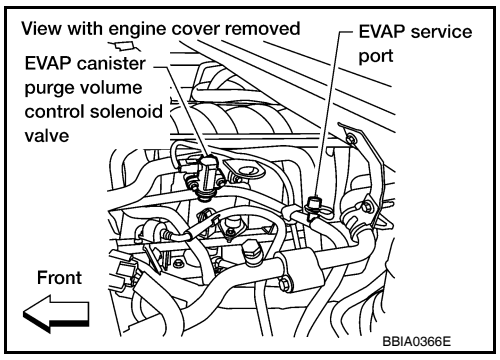

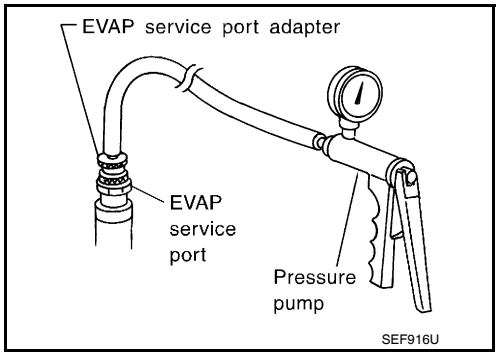

With CONSULT-III>>GO TO 9.
Without CONSULT-III>>GO TO 10.

9. CHECK FOR EVAP LEAK

With CONSULT-III

1. Turn ignition switch ON.
2. Select “EVAP SYSTEM CLOSE” of “WORK SUPPORT” mode with CONSULT-III.
3. Touch “START” and apply pressure into the EVAP line until the pressure indicator reaches the middle of the bar graph.
   CAUTION:
   - **Do not use compressed air or a high pressure pump.**
   - **Do not exceed 4.12 kPa (0.042 kg/cm^2, 0.6 psi) of pressure in the system.**
4. Using EVAP leak detector, locate the EVAP leak. For the leak detector, refer to the instruction manual for more details.
   Refer to EC-37, "Description".

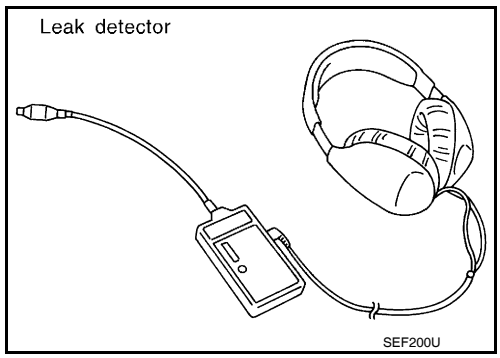

OK or NG

OK >> GO TO 11.
NG >> Repair or replace.

10. CHECK FOR EVAP LEAK

Without CONSULT-III

1. Turn ignition switch OFF.
2. Apply 12 volts DC to EVAP canister vent control valve. The valve will close. (Continue to apply 12 volts until the end of test.)

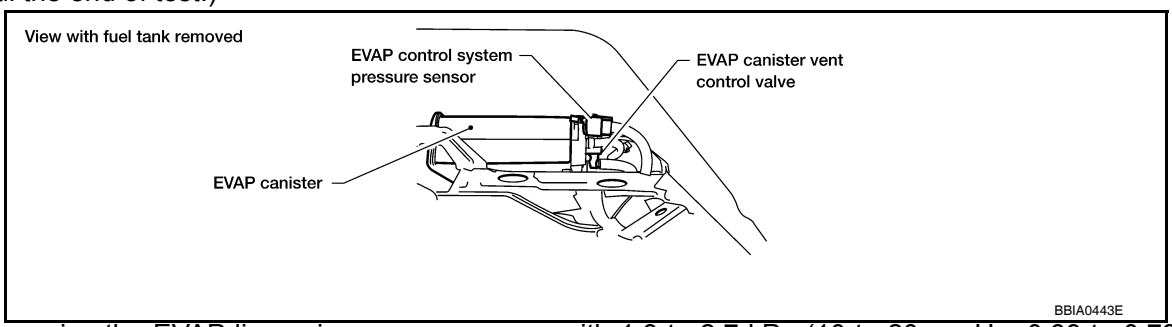

3. Pressurize the EVAP line using pressure pump with 1.3 to 2.7 kPa (10 to 20 mmHg, 0.39 to 0.79 inHg), then remove pump and EVAP service port adapter.
   CAUTION:
   - **Do not use compressed air or a high pressure pump.**
   - **Do not exceed 4.12 kPa (0.042 kg/cm^2, 0.6 psi) of pressure in the system.**

4. Using EVAP leak detector, locate the EVAP leak. For the leak detector, refer to the instruction manual for more details. Refer to EC-37, "Description".

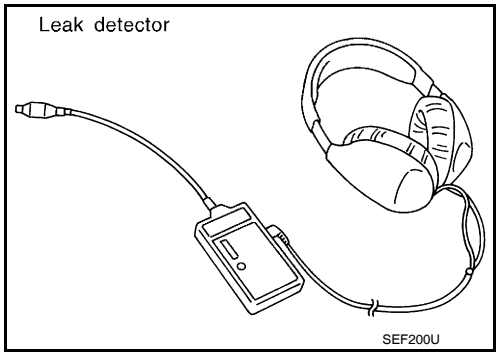

OK or NG

OK >> GO TO 12.
NG >> Repair or replace.

11. CHECK EVAP CANISTER PURGE VOLUME CONTROL SOLENOID VALVE OPERATION

With CONSULT-III

1. Disconnect vacuum hose to EVAP canister purge volume control solenoid valve at EVAP service port.
2. Start engine.
3. Perform “PURG VOL CONT/V” in “ACTIVE TEST” mode.
4. Touch “Qu” on CONSULT-III screen to increase “PURG VOL CONT/V” opening to 100%.
5. Check vacuum hose for vacuum when revving engine up to 2,000 rpm.

Vacuum should exist.

OK or NG

OK >> GO TO 14.
NG >> GO TO 13.

12. CHECK EVAP CANISTER PURGE VOLUME CONTROL SOLENOID VALVE OPERATION

Without CONSULT-III

1. Start engine and warm it up to normal operating temperature.
2. Stop engine.
3. Disconnect vacuum hose to EVAP canister purge volume control solenoid valve at EVAP service port.
4. Start engine and let it idle for at least 80 seconds.
5. Check vacuum hose for vacuum when revving engine up to 2,000 rpm.

Vacuum should exist.

OK or NG

OK >> GO TO 15.
NG >> GO TO 13.

13. CHECK VACUUM HOSE

Check vacuum hoses for clogging or disconnection. Refer to EC-37, "Description".

OK or NG

OK (With CONSULT-III)>>GO TO 14.
OK (Without CONSULT-III)>>GO TO 15.
NG >> Repair or reconnect the hose.

14. CHECK EVAP CANISTER PURGE VOLUME CONTROL SOLENOID VALVE

With CONSULT-III

1. Start engine.
2. Perform “PURG VOL CONT/V” in “ACTIVE TEST” mode with CONSULT-III. Check that engine speed varies according to the valve opening.

OK or NG

OK >> GO TO 16.
NG >> GO TO 15.

15. CHECK EVAP CANISTER PURGE VOLUME CONTROL SOLENOID VALVE

Refer to EC-238, "Component Inspection".

OK or NG

OK >> GO TO 16.
NG >> Replace EVAP canister purge volume control solenoid valve.

16. CHECK FUEL TANK TEMPERATURE SENSOR

Refer to EC-190, "Component Inspection".

OK or NG

OK >> GO TO 17.
NG >> Replace fuel level sensor unit.

17. CHECK EVAP CONTROL SYSTEM PRESSURE SENSOR

Refer to EC-248, "Component Inspection".

OK or NG

OK >> GO TO 18.
NG >> Replace EVAP control system pressure sensor.

18. CHECK EVAP/ORVR LINE

Check EVAP/ORVR line between EVAP canister and fuel tank for clogging, kink, looseness and improper connection. For location, refer to EC-416.

OK or NG

OK >> GO TO 19.
NG >> Repair or replace hoses and tubes.

19. CHECK RECIRCULATION LINE

Check recirculation line between filler neck tube and fuel tank for clogging, kink, cracks, looseness and improper connection.

OK or NG

OK >> GO TO 20.
NG >> Repair or replace hose, tube or filler neck tube.

20. CHECK REFUELING EVAP VAPOR CUT VALVE

Refer to EC-418, "Component Inspection".

OK or NG

OK >> GO TO 21.
NG >> Replace refueling EVAP vapor cut valve with fuel tank.

21. CHECK INTERMITTENT INCIDENT

Refer to GI-35, "How to Check Terminal" and GI-38, "Intermittent Incident".

>> **INSPECTION END**

Component Inspection

INFOID:0000000001351637

FUEL TANK VACUUM RELIEF VALVE (BUILT INTO FUEL FILLER CAP)

1. Wipe clean valve housing.

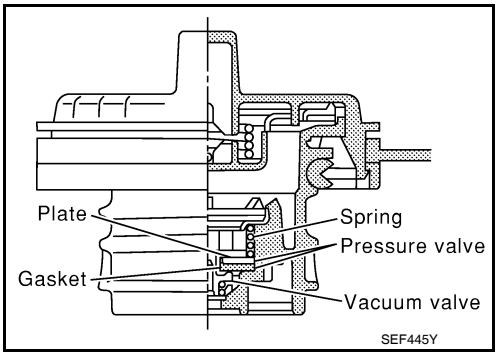

2. Check valve opening pressure and vacuum.

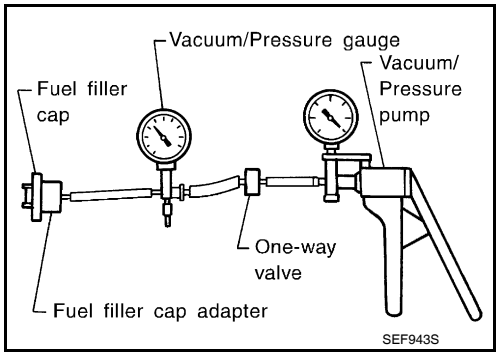

Pressure: **15.3 - 20.0 kPa (0.156 - 0.204 kg/cm^2, 2.22 - 2.90 psi)**

Vacuum: **–6.0 to –3.3 kPa (–0.061 to –0.034 kg/cm^2, –0.87 to –0.48 psi)**

3. If out of specification, replace fuel filler cap as an assembly.

CAUTION:
Use only a genuine fuel filler cap as a replacement. If an incorrect fuel filler cap is used, the MIL may come on.

P0456 EVAP CONTROL SYSTEM

On Board Diagnosis Logic

INFOID:0000000001351633

This diagnosis detects very small leaks in the EVAP line between fuel tank and EVAP canister purge volume control solenoid valve, using the intake manifold vacuum in the same way as conventional EVAP small leak diagnosis.
If ECM judges a leak which corresponds to a very small leak, the very small leak P0456 will be detected.
If ECM judges a leak equivalent to a small leak, EVAP small leak P0442 will be detected.
If ECM judges there are no leaks, the diagnosis will be OK.

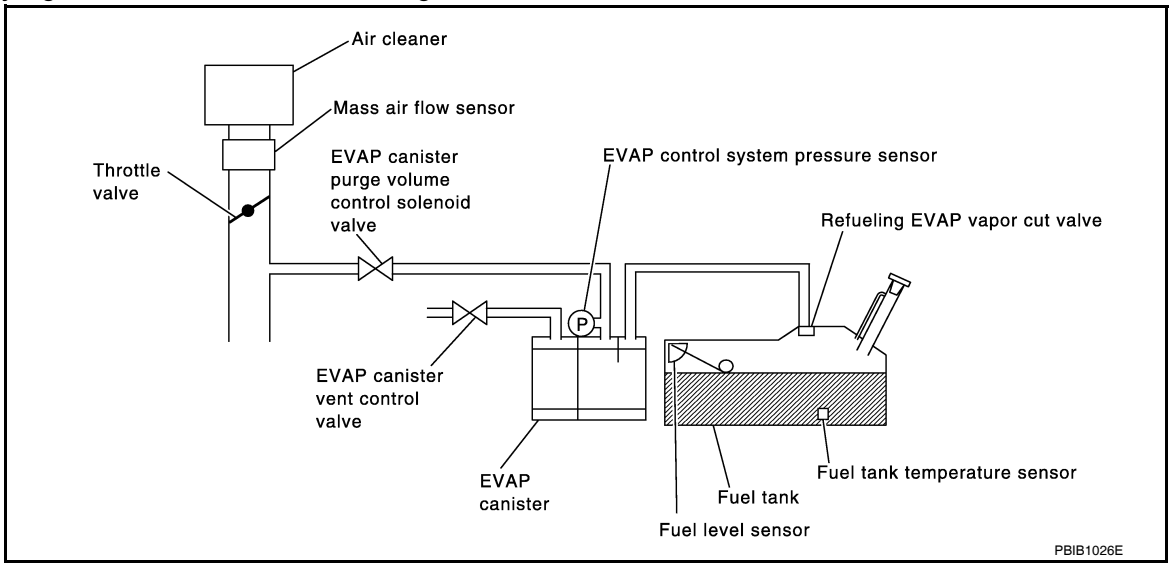

DTC No.	Trouble diagnosis name	DTC detecting condition	Possible cause
P0456 0456	Evaporative emission control system very small leak (negative pressure check)	• EVAP system has a very small leak. • EVAP system does not operate properly.	• Incorrect fuel tank vacuum relief valve • Incorrect fuel filler cap used • Fuel filler cap remains open or fails to close. • Foreign matter caught in fuel filler cap. • Leak is in line between intake manifold and EVAP canister purge volume control solenoid valve. • Foreign matter caught in EVAP canister vent control valve. • EVAP canister or fuel tank leaks • EVAP purge line (pipe and rubber tube) leaks • EVAP purge line rubber tube bent • Loose or disconnected rubber tube • EVAP canister vent control valve and the circuit • EVAP canister purge volume control solenoid valve and the circuit • Fuel tank temperature sensor • O-ring of EVAP canister vent control valve is missing or damaged • EVAP canister is saturated with water • EVAP control system pressure sensor • Refueling EVAP vapor cut valve • ORVR system leaks • Fuel level sensor and the circuit • Foreign matter caught in EVAP canister purge volume control solenoid valve

CAUTION:
- **Use only a genuine NISSAN fuel filler cap as a replacement. If an incorrect fuel filler cap is used, the MIL may come on.**
- **If the fuel filler cap is not tightened properly, the MIL may come on.**
- **Use only a genuine NISSAN rubber tube as a replacement.**

DTC Confirmation Procedure

INFOID:0000000001351634

NOTE:
- **If DTC P0456 is displayed with P0442, first perform trouble diagnosis for DTC P0456.**
- **After repair, make sure that the hoses and clips are installed properly.**
- If DTC Confirmation Procedure has been previously conducted, always turn ignition switch OFF and wait at least 10 seconds before conducting the next test.

TESTING CONDITION:
- **Open engine hood before conducting following procedure.**
- **If any of following conditions are met just before the DTC confirmation procedure, leave the vehicle for more than 1 hour.**
  - **Fuel filler cap is removed.**
  - **Fuel is refilled or drained.**
  - **EVAP component parts is/are removed.**
- **Before performing the following procedure, confirm that battery voltage is more than 11V at idle.**

WITH CONSULT-III

1. Turn ignition switch ON and select “DATA MONITOR” mode with CONSULT-III.
2. Make sure the following conditions are met.
   FUEL LEVEL SE: 0.25 - 1.4V
   COOLAN TEMP/S: 0 - 32°C (32 - 90°F)
   FUEL T/TMP SE: 0 - 35°C (32 - 95°F)
   INT/A TEMP SE: More than 0°C (32°F)
   If NG, turn ignition switch OFF and leave the vehicle in a cool place (soak the vehicle) or refilling/draining fuel until the output voltage condition of the “FUEL LEVEL SE” meets within the range above and leave the vehicle for more than 1 hour. Then start from step 1).
3. Turn ignition switch OFF, wait at least 10 seconds and then turn ON.
4. Select “EVP V/S LEAK P0456/P1456” of “EVAPORATIVE SYSTEM” in “DTC WORK SUPPORT” mode with CONSULT-III.
   Follow the instruction displayed.
5. Make sure that “OK” is displayed.
   If “NG” is displayed, refer to EC-268, "Diagnosis Procedure".
   NOTE:
   - **If the engine speed cannot be maintained within the range displayed on CONSULT-III screen, go to EC-13, "Basic Inspection".**
   - **Make sure that EVAP hoses are connected to EVAP canister purge volume control solenoid valve properly.**

Overall Function Check

INFOID:0000000001351635

WITH GST

Use this procedure to check the overall function of the EVAP very small leak function. During this check, a 1st trip DTC might not be confirmed.

CAUTION:
- **Do not use compressed air, doing so may damage the EVAP system.**
- **Do not start engine.**
- **Do not exceeded 4.12 kPa (0.042 kg/cm^2 , 0.6 psi).**

1. Attach the EVAP service port adapter securely to the EVAP service port.

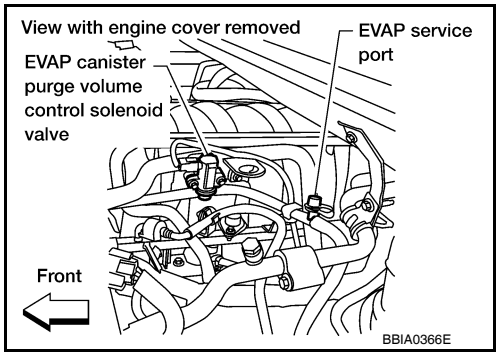

2. Set the pressure pump and a hose.
3. Also set a vacuum gauge via 3-way connector and a hose.
4. Turn ignition switch ON.
5. Connect GST and select Service $08.
6. Using Service $08, control the EVAP canister vent control valve (close).
7. Apply pressure and make sure the following conditions are satisfied.
   Pressure to be applied: 2.7 kPa (20 mmHg, 0.79 inHg)
   Time to be waited after the pressure drawn in to the EVAP system and the pressure to be dropped: 60 seconds and the pressure should not be dropped more than 0.4 kPa (3 mmHg, 0.12 inHg).
   If NG, go to EC-268, "Diagnosis Procedure" .
   If OK, go to next step.
8. Disconnect GST.
9. Start engine and warm it up to normal operating temperature.
10. Turn ignition switch OFF and wait at least 10 seconds.
11. Restart engine and let it idle for 90 seconds.
12. Keep engine speed at 2,000 rpm for 30 seconds.
13. Turn ignition switch OFF.
    NOTE:
    For more information, refer to GST Instruction Manual.

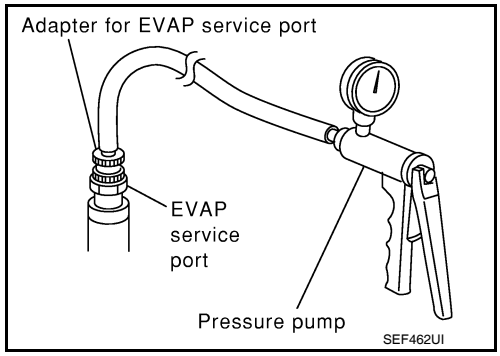

Diagnosis Procedure

INFOID:0000000001351636

1. CHECK FUEL FILLER CAP DESIGN

1. Turn ignition switch OFF.
2. Check for genuine NISSAN fuel filler cap design.

OK or NG

OK >> GO TO 2.
NG >> Replace with genuine NISSAN fuel filler cap.

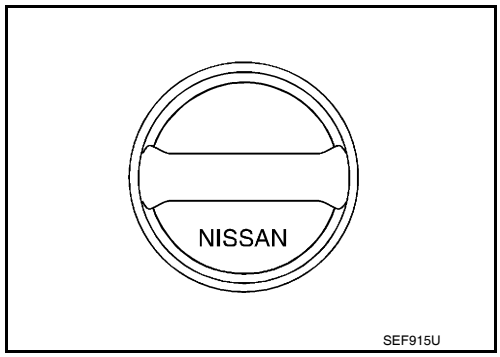

2. CHECK FUEL FILLER CAP INSTALLATION

Check that the cap is tightened properly by rotating the cap clockwise.

OK or NG

OK >> GO TO 3.
NG >> 1. Open fuel filler cap, then clean cap and fuel filler neck threads using air blower.
2. Retighten until ratcheting sound is heard.

3. CHECK FUEL FILLER CAP FUNCTION

Check for air releasing sound while opening the fuel filler cap.

OK or NG

OK >> GO TO 5.
NG >> GO TO 4.

4. CHECK FUEL TANK VACUUM RELIEF VALVE

Refer to EC-272, "Component Inspection" .

OK or NG

OK >> GO TO 5.
NG >> Replace fuel filler cap with a genuine one.

5. INSTALL THE PRESSURE PUMP

To locate the EVAP leak, install EVAP service port adapter and pressure pump to EVAP service port securely.

NOTE:

Improper installation of the EVAP service port adapter to the EVAP service port may cause leaking.

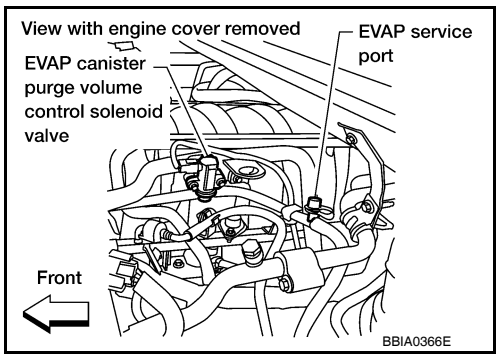

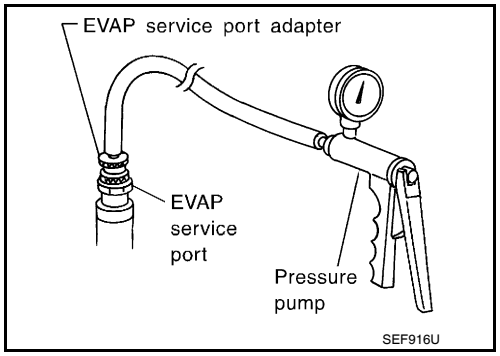

With CONSULT-III>>GO TO 6.
Without CONSULT-III>>GO TO 7.

6. CHECK FOR EVAP LEAK

With CONSULT-III

1. Turn ignition switch ON.
2. Select “EVAP SYSTEM CLOSE” of “WORK SUPPORT” mode with CONSULT-III.
3. Touch “START” and apply pressure into the EVAP line until the pressure indicator reaches the middle of the bar graph.
   CAUTION:
   - **Do not use compressed air or a high pressure pump.**
   - **Do not exceed 4.12 kPa (0.042 kg/cm^2 , 0.6 psi) of pressure in the system.**
4. Using EVAP leak detector, locate the EVAP leak. For the leak detector, refer to the instruction manual for more details.
   Refer to EC-37, "Description" .

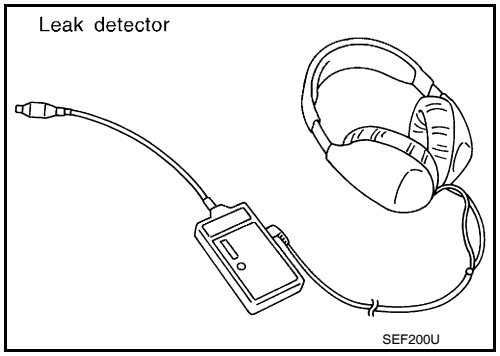

OK or NG

OK >> GO TO 8.
NG >> Repair or replace.

7. CHECK FOR EVAP LEAK

Without CONSULT-III

1. Turn ignition switch OFF.

2. Apply 12 volts DC to EVAP canister vent control valve. The valve will close. (Continue to apply 12 volts until the end of test.)

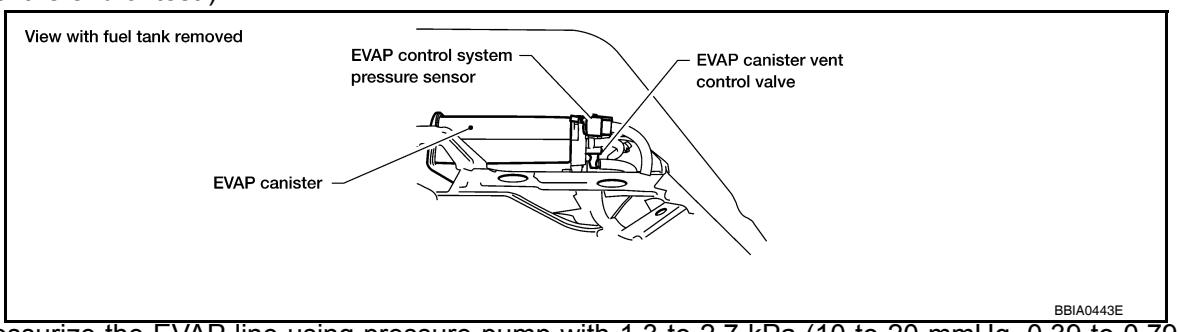

3. Pressurize the EVAP line using pressure pump with 1.3 to 2.7 kPa (10 to 20 mmHg, 0.39 to 0.79 inHg), then remove pump and EVAP service port adapter.
   CAUTION:
   - **Do not use compressed air or a high pressure pump.**
   - **Do not exceed 4.12 kPa (0.042 kg/cm^2 , 0.6 psi) of pressure in the system.**
4. Using EVAP leak detector, locate the EVAP leak. For the leak detector, refer to the instruction manual for more details. Refer to EC-37, "Description" .

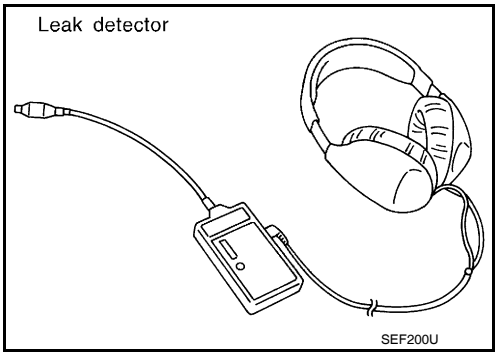

OK or NG

OK >> GO TO 8.
NG >> Repair or replace.

8. CHECK EVAP CANISTER VENT CONTROL VALVE

Check the following.
- EVAP canister vent control valve is installed properly.
  Refer to EC-498, "Removal and Installation" .
- EVAP canister vent control valve.
  Refer to EC-241, "Component Inspection" .

OK or NG

OK >> GO TO 9.
NG >> Repair or replace EVAP canister vent control valve and O-ring.

9. CHECK IF EVAP CANISTER SATURATED WITH WATER

1. Remove EVAP canister with EVAP canister vent control valve and EVAP control system pressure sensor attached.
2. Does water drain from the EVAP canister?

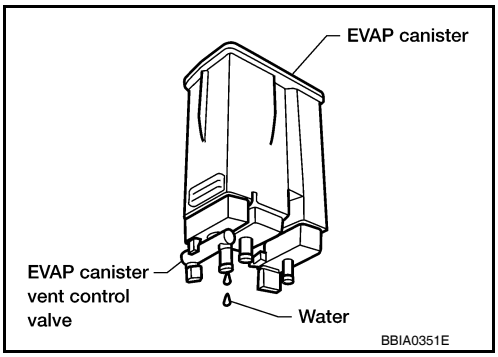

Yes or No

Yes >> GO TO 10.
No (With CONSULT-III)>>GO TO 12.
No (Without CONSULT-III)>>GO TO 13.

10. CHECK EVAP CANISTER

Weigh the EVAP canister with the EVAP canister vent control valve and EVAP control system pressure sensor attached.
The weight should be less than 2.5 kg (5.5 lb).

OK or NG

OK (With CONSULT-III)>>GO TO 12.
OK (Without CONSULT-III)>>GO TO 13.
NG >> GO TO 11.

11. DETECT MALFUNCTIONING PART

Check the following.
- EVAP canister for damage
- EVAP hose between EVAP canister and vehicle frame for clogging or poor connection

>> Repair hose or replace EVAP canister.

12. CHECK EVAP CANISTER PURGE VOLUME CONTROL SOLENOID VALVE OPERATION

With CONSULT-III

1. Disconnect vacuum hose to EVAP canister purge volume control solenoid valve at EVAP service port.
2. Start engine.
3. Perform “PURG VOL CONT/V” in “ACTIVE TEST” mode.
4. Touch “Qu” on CONSULT-III screen to increase “PURG VOL CONT/V” opening to 100%.
5. Check vacuum hose for vacuum when revving engine up to 2,000 rpm.

Vacuum should exist.

OK or NG

OK >> GO TO 15.
NG >> GO TO 14.

13. CHECK EVAP CANISTER PURGE VOLUME CONTROL SOLENOID VALVE OPERATION

Without CONSULT-III

1. Start engine and warm it up to normal operating temperature.
2. Stop engine.
3. Disconnect vacuum hose to EVAP canister purge volume control solenoid valve at EVAP service port.
4. Start engine and let it idle for at least 80 seconds.
5. Check vacuum hose for vacuum when revving engine up to 2,000 rpm.

Vacuum should exist.

OK or NG

OK >> GO TO 16.
NG >> GO TO 14.

14. CHECK VACUUM HOSE

Check vacuum hoses for clogging or disconnection. Refer to EC-37, "Description".

OK or NG

OK >> GO TO 15.
NG >> Repair or reconnect the hose.

15. CHECK EVAP CANISTER PURGE VOLUME CONTROL SOLENOID VALVE

Refer to EC-238, "Component Inspection".

OK or NG

OK >> GO TO 16.
NG >> Replace EVAP canister purge volume control solenoid valve.

16. CHECK FUEL TANK TEMPERATURE SENSOR

Refer to EC-190, "Component Inspection" .

OK or NG

OK >> GO TO 17.
NG >> Replace fuel level sensor unit.

17. CHECK EVAP CONTROL SYSTEM PRESSURE SENSOR

Refer to EC-248, "Component Inspection".

OK or NG

OK >> GO TO 18.
NG >> Replace EVAP control system pressure sensor.

18. CHECK EVAP PURGE LINE

Check EVAP purge line (pipe, rubber tube, fuel tank and EVAP canister) for cracks or improper connection. Refer to EC-37, "Description".

OK or NG

OK >> GO TO 19.
NG >> Repair or reconnect the hose.

19. CLEAN EVAP PURGE LINE

Clean EVAP purge line (pipe and rubber tube) using air blower.

>> GO TO 20.

20. CHECK EVAP/ORVR LINE

Check EVAP/ORVR line between EVAP canister and fuel tank for clogging, kink, looseness and improper connection. For location, refer to EC-416.

OK or NG

OK >> GO TO 21.
NG >> Repair or replace hoses and tubes.

21. CHECK RECIRCULATION LINE

Check recirculation line between filler neck tube and fuel tank for clogging, kink, cracks, looseness and improper connection.

OK or NG

OK >> GO TO 22.
NG >> Repair or replace hose, tube or filler neck tube.

22. CHECK REFUELING EVAP VAPOR CUT VALVE

Refer to EC-418, "Component Inspection".

OK or NG

OK >> GO TO 23.
NG >> Replace refueling EVAP vapor cut valve with fuel tank.

23. CHECK FUEL LEVEL SENSOR

Refer to MWI-34, "Component Inspection".

OK or NG

OK >> GO TO 24.
NG >> Replace fuel level sensor unit.

24. CHECK INTERMITTENT INCIDENT

Refer to GI-35, "How to Check Terminal" and GI-38, "Intermittent Incident".

>> **INSPECTION END**

Component Inspection

INFOID:0000000001351638

FUEL TANK VACUUM RELIEF VALVE (BUILT INTO FUEL FILLER CAP)

1. Wipe clean valve housing.

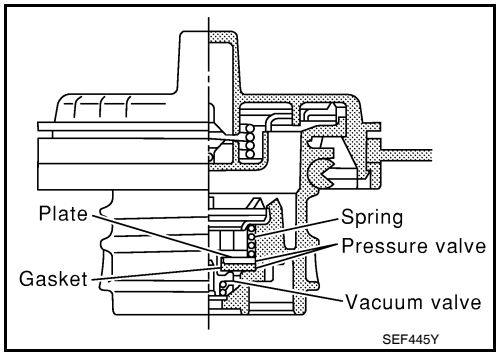

2. Check valve opening pressure and vacuum.

Pressure: **15.3 - 20.0 kPa (0.156 - 0.204 kg/cm^2, 2.22 - 2.90 psi)**

Vacuum: **−6.0 to −3.3 kPa (−0.061 to −0.034 kg/cm^2, −0.87 to −0.48 psi)**

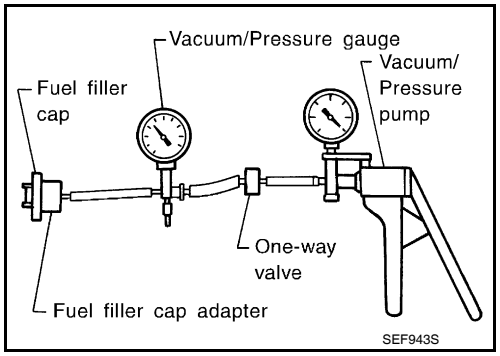

3. If out of specification, replace fuel filler cap as an assembly.

CAUTION:
Use only a genuine fuel filler cap as a replacement. If an incorrect fuel filler cap is used, the MIL may come on.

P0460 FUEL LEVEL SENSOR

Component Description

INFOID:0000000001351639

The fuel level sensor is mounted in the fuel level sensor unit. The sensor detects a fuel level in the fuel tank and transmits a signal to the combination meter. The combination meter sends the fuel level sensor signal to the ECM through CAN communication line.
It consists of two parts, one is mechanical float and the other is variable resistor. Fuel level sensor output voltage changes depending on the movement of the fuel mechanical float.

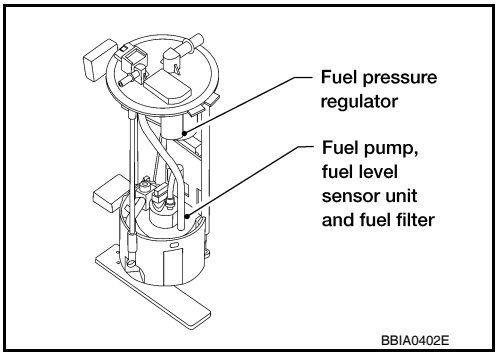

On Board Diagnosis Logic

INFOID:0000000001351640

NOTE:
- **If DTC P0460 is displayed with DTC U1000 or U1001, first perform the trouble diagnosis for DTC U1000, U1001. Refer to EC-87 .**
- **If DTC P0460 is displayed with DTC U1010, first perform the trouble diagnosis for DTC U1010. Refer to EC-88 .**

When the vehicle is parked, naturally the fuel level in the fuel tank is stable. It means that output signal of the fuel level sensor does not change. If ECM senses sloshing signal from the sensor, fuel level sensor malfunction is detected.

DTC No.	Trouble diagnosis name	DTC detecting condition	Possible cause
P0460 0460	Fuel level sensor circuit noise	Even though the vehicle is parked, a signal being varied is sent from the fuel level sensor to ECM.	• Harness or connectors (The CAN communication line is open or shorted) • Harness or connectors (The sensor circuit is open or shorted) • Combination meter • Fuel level sensor

DTC Confirmation Procedure

INFOID:0000000001351641

NOTE:
If DTC Confirmation Procedure has been previously conducted, always turn ignition switch OFF and wait at least 10 seconds before conducting the next test.

WITH CONSULT-III

1. Start engine and wait maximum of 2 consecutive minutes.
2. Check 1st trip DTC.
3. If 1st trip DTC is detected, go to EC-274, "Diagnosis Procedure".

WITH GST

Follow the procedure “WITH CONSULT-III” above.

Diagnosis Procedure

INFOID:0000000001351642

1. CHECK COMBINATION METER FUNCTION

Refer to MWI-5, "METER SYSTEM : System Description".

OK or NG

OK >> GO TO 2.
NG >> Go to MWI-34, "Component Inspection".

2. CHECK INTERMITTENT INCIDENT

Refer to GI-35, "How to Check Terminal" and GI-38, "Intermittent Incident".

>> **INSPECTION END**

P0461 FUEL LEVEL SENSOR

Component Description

INFOID:0000000001351644

The fuel level sensor is mounted in the fuel level sensor unit. The sensor detects a fuel level in the fuel tank and transmits a signal to the combination meter. The combination meter sends the fuel level sensor signal to the ECM through CAN communication line.
It consists of two parts, one is mechanical float and the other is variable resistor. Fuel level sensor output voltage changes depending on the movement of the fuel mechanical float.

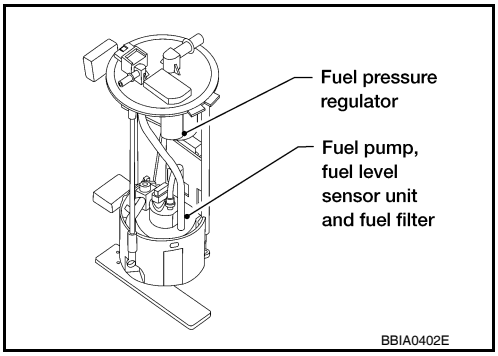

On Board Diagnosis Logic

INFOID:0000000001351645

NOTE:
- **If DTC P0461 is displayed with DTC U1000 or U1001, first perform the trouble diagnosis for DTC U1000, U1001. Refer to EC-87 .**
- **If DTC P0461 is displayed with DTC U1010, first perform the trouble diagnosis for DTC U1010. Refer to EC-88 .**

Driving long distances naturally affect fuel gauge level.
This diagnosis detects the fuel gauge malfunction of the gauge not moving even after a long distance has been driven.

DTC No.	Trouble diagnosis name	DTC detecting condition	Possible cause
P0461 0461	Fuel level sensor circuit range/performance	The output signal of the fuel level sensor does not change within the specified range even though the vehicle has been driven a long distance.	• Harness or connectors (The CAN communication line is open or shorted) • Harness or connectors (The sensor circuit is open or shorted) • Combination meter • Fuel level sensor

Overall Function Check

INFOID:0000000001351646

Use this procedure to check the overall function of the fuel level sensor function. During this check, a 1st trip DTC might not be confirmed.

WARNING:
When performing following procedure, be sure to observe the handling of the fuel. Refer to FL-11, "Removal and Installation".
TESTING CONDITION:
Before starting overall function check, preparation of draining fuel and refilling fuel is required.

WITH CONSULT-III
NOTE:
Start from step 10, if it is possible to confirm that the fuel cannot be drained by 30 ℓ (7-7/8 US gal, 6-5/8 Imp gal) in advance.
1. Prepare a fuel container and a spare hose.
2. Release fuel pressure from fuel line, refer to EC-494, "Fuel Pressure Check".
3. Remove the fuel feed hose on the fuel level sensor unit.
4. Connect a spare fuel hose where the fuel feed hose was removed.
5. Turn ignition switch OFF and wait at least 10 seconds then turn ON.
6. Select “FUEL LEVEL SE” in “DATA MONITOR” mode with CONSULT-III.
7. Check “FUEL LEVEL SE” output voltage and note it.
8. Select “FUEL PUMP” in “ACTIVE TEST” mode with CONSULT-III.
9. Touch “ON” and drain fuel approximately 30 ℓ (7-7/8 US gal, 6-5/8 Imp gal) and stop it.
10. Check “FUEL LEVEL SE” output voltage and note it.
11. Fill fuel into the fuel tank for 30 ℓ (7-7/8 US gal, 6-5/8 Imp gal).

12. Check “FUEL LEVEL SE” output voltage and note it.
13. Confirm whether the voltage changes more than 0.03V during step 7 to 10 and 10 to 12.
    If NG, go to EC-277, "Diagnosis Procedure".

WITH GST

NOTE:
Start from step 8, if it is possible to confirm that the fuel cannot be drained by 30 ℓ (7-7/8 US gal, 6-5/8 Imp gal) in advance.

1. Prepare a fuel container and a spare hose.
2. Release fuel pressure from fuel line. Refer to EC-494, "Fuel Pressure Check".
3. Remove the fuel feed hose on the fuel level sensor unit.
4. Connect a spare fuel hose where the fuel feed hose was removed.
5. Turn ignition switch ON.
6. Drain fuel by 30 ℓ (7-7/8 US gal, 6-5/8 Imp gal) from the fuel tank using proper equipment.
7. Confirm that the fuel gauge indication varies.
8. Fill fuel into the fuel tank for 30 ℓ (7-7/8 US gal, 6-5/8 Imp gal).
9. Confirm that the fuel gauge indication varies.
10. If NG, go to EC-277, "Diagnosis Procedure".

Diagnosis Procedure

INFOID:0000000001351647

1. CHECK COMBINATION METER FUNCTION

Refer to MWI-5, "METER SYSTEM : System Diagram".

OK or NG

OK >> GO TO 2.
NG >> Go to MWI-34, "Component Inspection" .

2. CHECK INTERMITTENT INCIDENT

Refer to GI-35, "How to Check Terminal" and GI-38, "Intermittent Incident".

>> **INSPECTION END**

P0462, P0463 FUEL LEVEL SENSOR

Component Description

INFOID:0000000001351649

The fuel level sensor is mounted in the fuel level sensor unit. The sensor detects a fuel level in the fuel tank and transmits a signal to the combination meter. The combination meter sends the fuel level sensor signal to the ECM through CAN communication line.
It consists of two parts, one is mechanical float and the other is variable resistor. Fuel level sensor output voltage changes depending on the movement of the fuel mechanical float.

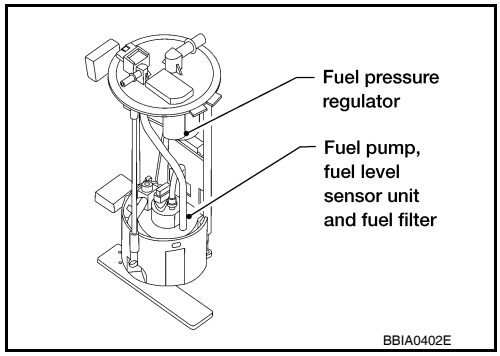

On Board Diagnosis Logic

INFOID:0000000001351650

NOTE:
- **If DTC P0462 or P0463 is displayed with DTC U1000 or U1001, first perform the trouble diagnosis for DTC U1000, U1001. Refer to EC-87 .**
- **If DTC P0462 or P0463 is displayed with DTC U1010, first perform the trouble diagnosis for DTC U1010. Refer to EC-88 .**

This diagnosis indicates the former, to detect open or short circuit malfunction.

DTC No.	Trouble diagnosis name	DTC detecting condition	Possible cause
P0462 0462	Fuel level sensor circuit low input	An excessively low voltage from the sensor is sent to ECM.	• Harness or connectors (The CAN communication line is open or shorted) • Harness or connectors (The sensor circuit is open or shorted) • Combination meter • Fuel level sensor
P0463 0463	Fuel level sensor circuit high input	An excessively high voltage from the sensor is sent to ECM.	

DTC Confirmation Procedure

INFOID:0000000001351651

NOTE:
If DTC Confirmation Procedure has been previously conducted, always turn ignition switch OFF and wait at least 10 seconds before conducting the next test.
TESTING CONDITION:
Before performing the following procedure, confirm that battery voltage is more than 11V at ignition switch ON.

WITH CONSULT-III
1. Turn ignition switch ON.
2. Wait at least 5 seconds.
3. Check 1st trip DTC.
4. If 1st trip DTC is detected, go to EC-278, "Diagnosis Procedure".

WITH GST
Follow the procedure “WITH CONSULT-III” above.

Diagnosis Procedure

INFOID:0000000001351652

1.CHECK COMBINATION METER FUNCTION

Refer to MWI-5.

OK or NG

OK >> GO TO 2.
NG >> Go to MWI-34, "Component Inspection".

2. CHECK INTERMITTENT INCIDENT

Refer to GI-35, "How to Check Terminal" and GI-38, "Intermittent Incident".

>> **INSPECTION END**

P0500 VSS

Description

INFOID:0000000001351654

NOTE:
- **If DTC P0500 is displayed with DTC U1000 or U1001, first perform the trouble diagnosis for DTC U1000, U1001. Refer to EC-87.**
- **If DTC P0500 is displayed with DTC U1010, first perform the trouble diagnosis for DTC U1010. Refer to EC-88.**

The vehicle speed signal is sent to the combination meter from the “ABS actuator and electric unit (control unit)” by CAN communication line. The c combination meter then sends a signal to the ECM by CAN communication line.

On Board Diagnosis Logic

INFOID:0000000001351655

DTC No.	Trouble diagnosis name	DTC detecting condition	Possible cause
P0500 0500	Vehicle speed sensor	The almost 0 km/h (0 MPH) signal from vehicle speed sensor is sent to ECM even when vehicle is being driven.	• Harness or connectors (The CAN communication line is open or shorted) • Harness or connectors (The vehicle speed signal circuit is open or shorted) • Wheel sensor • Combination meter • ABS actuator and electric unit (control unit)

FAIL-SAFE MODE

When the malfunction is detected, the ECM enters fail-safe mode.

Detected items	Engine operating condition in fail-safe mode
Vehicle speed sensor	When the fail-safe system for vehicle speed sensor is activated, the cooling fan operates (High) while engine is running.

DTC Confirmation Procedure

INFOID:0000000001351656

CAUTION:
Always drive vehicle at a safe speed.
NOTE:
If DTC Confirmation Procedure has been previously conducted, always turn ignition switch OFF and wait at least 10 seconds before conducting the next test.
TESTING CONDITION:
Steps 1 and 2 may be conducted with the drive wheels lifted in the shop or by driving the vehicle. If a road test is expected to be easier, it is unnecessary to lift the vehicle.

WITH CONSULT-III

1. Start engine (VDC switch OFF).
2. Read “VHCL SPEED SE” in “DATA MONITOR” mode with CONSULT-III. The vehicle speed on CONSULT-III should exceed 10 km/h (6 MPH) when rotating wheels with suitable gear position.
   If NG, go to EC-281, "Diagnosis Procedure".
   If OK, go to following step.
3. Select “DATA MONITOR” mode with CONSULT-III.
4. Warm engine up to normal operating temperature.
5. Maintain the following conditions for at least 60 consecutive seconds.

ENG SPEED	1,600 - 6,000 rpm
COOLAN TEMP/S	More than 70°C (158°F)
B/FUEL SCHDL	6.9 - 31.8 msec
Selector lever	Except P or N position
PW/ST SIGNAL	OFF

6. Check 1st trip DTC.
7. If 1st trip DTC is detected, go to EC-281, "Diagnosis Procedure".

Overall Function Check

INFOID:0000000001351657

Use this procedure to check the overall function of the vehicle speed sensor circuit. During this check, a 1st trip DTC might not be confirmed.

WITH GST

1. Lift up drive wheels.
2. Start engine.
3. Read vehicle speed sensor signal in Service $01 with GST.
   The vehicle speed sensor on GST should be able to exceed 10 km/h (6 MPH) when rotating wheels with suitable gear position.
4. If NG, go to EC-281, "Diagnosis Procedure".

Diagnosis Procedure

INFOID:0000000001351658

1. CHECK DTC WITH ABS ACTUATOR AND ELECTRIC UNIT (CONTROL UNIT)

Refer to BRC-24, "CONSULT-III Function (ABS)".

OK or NG

OK >> GO TO 2.
NG >> Repair or replace.

2. CHECK COMBINATION METER FUNCTION

Refer to MWI-5.

>> **INSPECTION END**

P0506 ISC SYSTEM

Description

INFOID:0000000001351659

NOTE:
If DTC P0506 is displayed with other DTC, first perform the trouble diagnosis for the other DTC.
The ECM controls the engine idle speed to a specified level through the fine adjustment of the air, which is let into the intake manifold, by operating the electric throttle control actuator. The operating of the throttle valve is varied to allow for optimum control of the engine idling speed. The crankshaft position sensor (POS) detects the actual engine speed and sends a signal to the ECM.
The ECM controls the electric throttle control actuator so that the engine speed coincides with the target value memorized in the ECM. The target engine speed is the lowest speed at which the engine can operate steadily. The optimum value stored in the ECM is determined by taking into consideration various engine conditions, such as during warming up, deceleration, and engine load (air conditioner, power steering and cooling fan operation, etc.).

On Board Diagnosis Logic

INFOID:0000000001351660

DTC No.	Trouble diagnosis name	DTC detecting condition	Possible cause
P0506 0506	Idle speed control system RPM lower than expected	The idle speed is less than the target idle speed by 100 rpm or more.	• Electric throttle control actuator • Intake air leak

DTC Confirmation Procedure

INFOID:0000000001351661

NOTE:
- If DTC Confirmation Procedure has been previously conducted, always turn ignition switch OFF and wait at least 10 seconds before conducting the next test.
- **If the target idle speed is out of the specified value, perform EC-18, "Idle Air Volume Learning", before conducting DTC Confirmation Procedure. For the target idle speed, refer to the EC-503, "Idle Speed and Ignition Timing".**

TESTING CONDITION:
- **Before performing the following procedure, confirm that battery voltage is more than 11V at idle.**
- **Always perform the test at a temperature above –10°C (14°F).**

WITH CONSULT-III

1. Open engine hood.
2. Start engine and warm it up to normal operating temperature.
3. Turn ignition switch OFF and wait at least 10 seconds.
4. Start engine and run it for at least 1 minute at idle speed.
5. Check 1st trip DTC.
6. If 1st trip DTC is detected, go to EC-282, "Diagnosis Procedure".

WITH GST

Follow the procedure “WITH CONSULT-III” above.

Diagnosis Procedure

INFOID:0000000001351662

1. CHECK INTAKE AIR LEAK

1. Start engine and let it idle.
2. Listen for an intake air leak after the mass air flow sensor.

OK or NG

OK >> GO TO 2.
NG >> Discover air leak location and repair.

2. REPLACE ECM

1. Stop engine.
2. Replace ECM.
3. Perform initialization of IVIS(NATS) system and registration of all IVIS(NATS) ignition key IDs. Refer to SEC-8, "ECM RE-COMMUNICATING FUNCTION : Special Repair Requirement".

4. Perform EC-17, "VIN Registration" .
5. Perform EC-18, "Accelerator Pedal Released Position Learning" .
6. Perform EC-18, "Throttle Valve Closed Position Learning" .
7. Perform EC-18, "Idle Air Volume Learning" .

>> **INSPECTION END**

P0507 ISC SYSTEM

Description

INFOID:0000000001351663

NOTE:
If DTC P0507 is displayed with other DTC, first perform the trouble diagnosis for the other DTC.
The ECM controls the engine idle speed to a specified level through the fine adjustment of the air, which is let into the intake manifold, by operating the electric throttle control actuator. The operating of the throttle valve is varied to allow for optimum control of the engine idling speed. The crankshaft position sensor (POS) detects the actual engine speed and sends a signal to the ECM.
The ECM controls the electric throttle control actuator so that the engine speed coincides with the target value memorized in the ECM. The target engine speed is the lowest speed at which the engine can operate steadily. The optimum value stored in the ECM is determined by taking into consideration various engine conditions, such as during warming up, deceleration, and engine load (air conditioner, power steering and cooling fan operation, etc.).

On Board Diagnosis Logic

INFOID:0000000001351664

DTC No.	Trouble diagnosis name	DTC detecting condition	Possible cause
P0507 0507	Idle speed control system RPM higher than expected	The idle speed is more than the target idle speed by 200 rpm or more.	• Electric throttle control actuator • Intake air leak • PCV system

DTC Confirmation Procedure

INFOID:0000000001351665

NOTE:
- If DTC Confirmation Procedure has been previously conducted, always turn ignition switch OFF and wait at least 10 seconds before conducting the next test.
- **If the target idle speed is out of the specified value, perform EC-18, "Idle Air Volume Learning", before conducting DTC Confirmation Procedure. For the target idle speed, refer to the EC-503, "Idle Speed and Ignition Timing".**

TESTING CONDITION:
- **Before performing the following procedure, confirm that battery voltage is more than 11V at idle.**
- **Always perform the test at a temperature above –10°C (14°F).**

WITH CONSULT-III

1. Open engine hood.
2. Start engine and warm it up to normal operating temperature.
3. Turn ignition switch OFF and wait at least 10 seconds.
4. Start engine and run it for at least 1 minute at idle speed.
5. Check 1st trip DTC.
6. If 1st trip DTC is detected, go to EC-284, "Diagnosis Procedure".

WITH GST

Follow the procedure “WITH CONSULT-III” above.

Diagnosis Procedure

INFOID:0000000001351666

1. CHECK PCV HOSE CONNECTION

Confirm that PCV hose is connected correctly.

OK or NG

OK >> GO TO 2.
NG >> Repair or replace.

2. CHECK INTAKE AIR LEAK

1. Start engine and let it idle.
2. Listen for an intake air leak after the mass air flow sensor.

OK or NG

OK >> GO TO 3.

NG >> Discover air leak location and repair.

3. REPLACE ECM

1. Stop engine.
2. Replace ECM.
3. Perform initialization of IVIS(NATS) system and registration of all IVIS(NATS) ignition key IDs. Refer to SEC-8, "ECM RE-COMMUNICATING FUNCTION : Special Repair Requirement".
4. Perform EC-17, "VIN Registration" .
5. Perform EC-18, "Accelerator Pedal Released Position Learning" .
6. Perform EC-18, "Throttle Valve Closed Position Learning" .
7. Perform EC-18, "Idle Air Volume Learning" .

>> **INSPECTION END**

P0550 PSP SENSOR

Component Description

INFOID:0000000001351667

Power steering pressure (PSP) sensor (1) is installed to the power steering high-pressure tube and detects a power steering load. This sensor is a potentiometer which transforms the power steering load into output voltage, and emits the voltage signal to the ECM. The ECM controls the electric throttle control actuator and adjusts the throttle valve opening angle to increase the engine speed and adjusts the idle speed for the increased load.

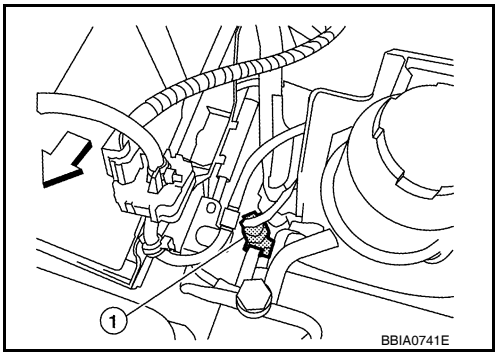

On Board Diagnosis Logic

INFOID:0000000001351669

The MIL will not light up for this self-diagnosis.
NOTE:
If DTC P0550 is displayed with DTC P0643, first perform the trouble diagnosis for DTC P0643. Refer to EC-293.

DTC No.	Trouble diagnosis name	DTC detecting condition	Possible cause
P0550 0550	Power steering pressure sensor circuit	An excessively low or high voltage from the sensor is sent to ECM.	• Harness or connectors (The sensor circuit is open or shorted) • Power steering pressure sensor

DTC Confirmation Procedure

INFOID:0000000001351670

NOTE:
If DTC Confirmation Procedure has been previously conducted, always turn ignition switch OFF and wait at least 10 seconds before conducting the next test.

WITH CONSULT-III

1. Start engine and let it idle for at least 5 seconds.
2. Check 1st trip DTC.
3. If 1st trip DTC is detected, go to EC-286, "Diagnosis Procedure".

WITH GST

Follow the procedure “WITH CONSULT-III” above.

Diagnosis Procedure

INFOID:0000000001351672

1.CHECK GROUND CONNECTIONS

1. Turn ignition switch OFF.
2. Loosen and retighten three ground screws on the body.
   Refer to EC-86, "Ground Inspection".

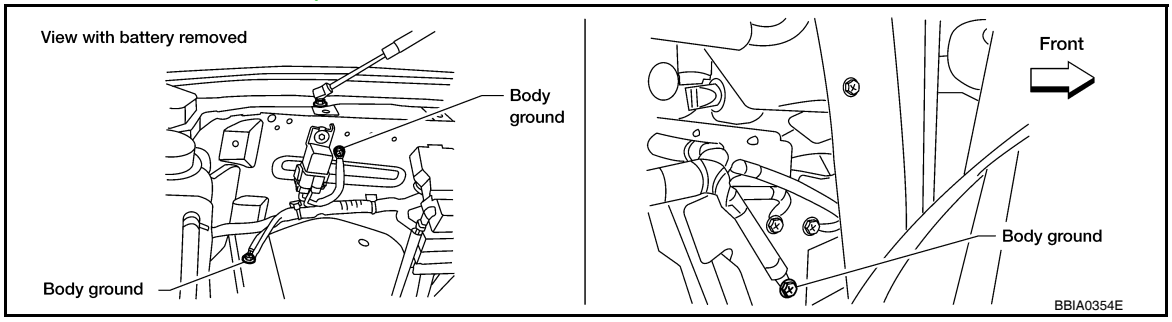

OK or NG

OK >> GO TO 2.
NG >> Repair or replace ground connections.

2. CHECK PSP SENSOR POWER SUPPLY CIRCUIT

1. Disconnect power steering pressure (PSP) sensor (1) harness connector.
2. Turn ignition switch ON.

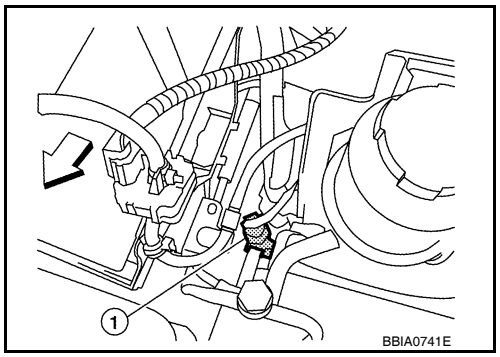

3. Check voltage between PSP sensor terminal 1 and ground with CONSULT-III or tester.

Voltage: Approximately 5V

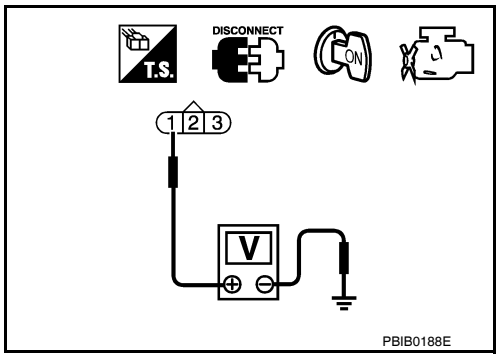

OK or NG
OK >> GO TO 3.
NG >> Repair harness or connectors.

3. CHECK PSP SENSOR GROUND CIRCUIT FOR OPEN AND SHORT

1. Turn ignition switch OFF.
2. Disconnect ECM harness connector.
3. Check harness continuity between PSP sensor terminal 3 and ECM terminal 67. Refer to Wiring Diagram.

Continuity should exist.

4. Also check harness for short to ground and short to power.

OK or NG
OK >> GO TO 4.
NG >> Repair open circuit or short to ground or short to power in harness or connectors.

4. CHECK PSP SENSOR INPUT SIGNAL CIRCUIT FOR OPEN AND SHORT

1. Check harness continuity between ECM terminal 12 and PSP sensor terminal 2.

Continuity should exist.

2. Also check harness for short to ground and short to power.

OK or NG
OK >> GO TO 5.
NG >> Repair open circuit or short to ground or short to power in harness or connectors.

5. CHECK PSP SENSOR

Refer to EC-288, "Component Inspection".

OK or NG
OK >> GO TO 6.
NG >> Replace PSP sensor.

6. CHECK INTERMITTENT INCIDENT

Refer to GI-35, "How to Check Terminal" and GI-38, "Intermittent Incident".

>> **INSPECTION END**

Component Inspection

INFOID:0000000001351673

POWER STEERING PRESSURE SENSOR

1. Reconnect all harness connectors disconnected.
2. Start engine and let it idle.
3. Check voltage between ECM terminal 12 and ground under the following conditions.

Condition	Voltage
Steering wheel: Being turned.	0.5 - 4.5V
Steering wheel: Not being turned.	0.4 - 0.8V

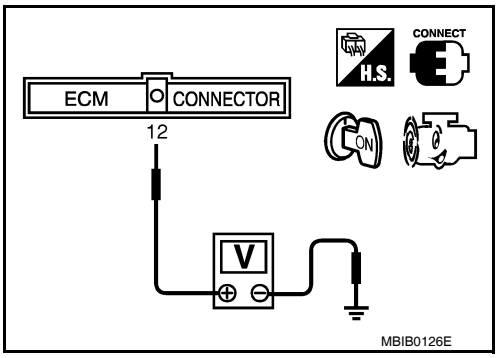

P0603 ECM POWER SUPPLY

Description

INFOID:0000000006084568

Battery voltage is supplied to the ECM even when the ignition switch is turned OFF for the ECM memory function of the DTC memory, the air-fuel ratio feedback compensation value memory, the idle air volume learning value memory, etc.

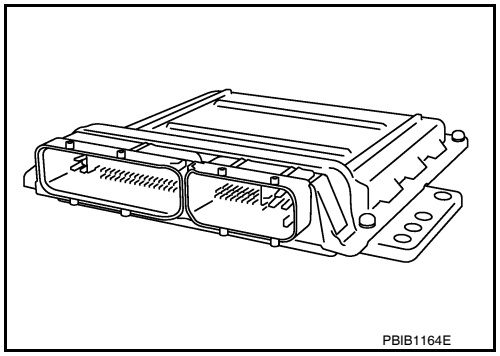

DTC Logic

INFOID:0000000006084569

DTC DETECTION LOGIC

DTC No.	Trouble diagnosis name	DTC detecting condition	Possible cause
P0603 0603	ECM power supply circuit	ECM backup RAM system does not function properly.	• Harness or connectors [ECM power supply (backup) circuit is open or shorted.] • Low battery voltage • Battery disconnected • ECM

DTC CONFIRMATION PROCEDURE

1.PRECONDITIONING

If DTC Confirmation Procedure has been previously conducted, always perform the following before conducting the next test.

1. Turn ignition switch OFF and wait at least 10 seconds.
2. Turn ignition switch ON.
3. Turn ignition switch OFF and wait at least 10 seconds.

>> GO TO 2.

2.PERFORM DTC CONFIRMATION PROCEDURE

1. Turn ignition switch ON and wait at least 10 seconds.
2. Turn ignition switch OFF and wait at least 5 minutes
3. Turn ignition switch ON and wait at least 10 seconds.
4. Repeat steps 2 and 3 for five more times.
5. Check 1st trip DTC.

Is 1st trip DTC detected?

YES >> Go to EC-289, "Diagnosis Procedure".
NO >> INSPECTION END

Diagnosis Procedure

INFOID:0000000001351679

1.CHECK ECM POWER SUPPLY

1. Turn ignition switch OFF.
2. Disconnect ECM harness connector.

3. Check voltage between ECM terminal 121 and ground with CONSULT-III or tester.

Voltage: Battery voltage

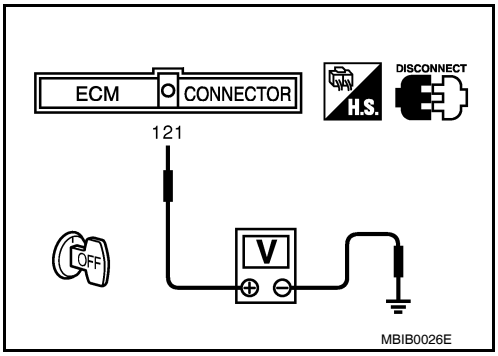

OK or NG

OK >> GO TO 3.
NG >> GO TO 2.

2. DETECT MALFUNCTIONING PART

Check the following.
- IPDM E/R connector E121
- 20A fuse
- Harness for open or short between ECM and battery

>> Repair or replace harness or connectors.

3. CHECK INTERMITTENT INCIDENT

Refer to GI-35, "How to Check Terminal" and GI-38, "Intermittent Incident".

OK or NG

OK >> GO TO 4.
NG >> Repair or replace harness or connectors.

4. PERFORM DTC CONFIRMATION PROCEDURE

With CONSULT-III
1. Turn ignition switch ON.
2. Select “SELF DIAG RESULTS” mode with CONSULT-III.
3. Touch “ERASE”.
4. **Perform DTC Confirmation Procedure.**
   See EC-289, "DTC Logic".
5. Is the 1st trip DTC P0603 displayed again?

With GST
1. Turn ignition switch ON.
2. Select Service $04 with GST.
3. **Perform DTC Confirmation Procedure.**
   See EC-289, "DTC Logic".
4. Is the 1st trip DTC P0603 displayed again?

Yes or No

Yes >> GO TO 5.
No >> **INSPECTION END**

5. REPLACE ECM

1. Replace ECM.
2. Perform initialization of IVIS(NATS) system and registration of all IVIS(NATS) ignition key IDs. Refer to SEC-8, "ECM RE-COMMUNICATING FUNCTION : Special Repair Requirement".
3. Perform EC-17, "VIN Registration".
4. Perform EC-18, "Accelerator Pedal Released Position Learning".
5. Perform EC-18, "Throttle Valve Closed Position Learning".
6. Perform EC-18, "Idle Air Volume Learning".

>> **INSPECTION END**

P0605 ECM

Component Description

INFOID:0000000001351680

The ECM consists of a microcomputer and connectors for signal input and output and for power supply. The ECM controls the engine.

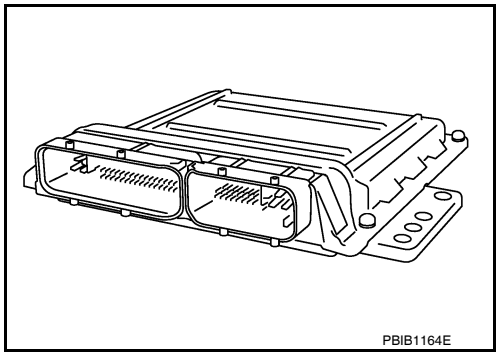

On Board Diagnosis Logic

INFOID:0000000001351681

This self-diagnosis has one or two trip detection logic.

DTC No.	Trouble diagnosis name	DTC detecting condition		Possible cause
P0605 0605	Engine control module	A)	ECM calculation function is malfunctioning.	• ECM
		B)	ECM EEP-ROM system is malfunctioning.	
		C)	ECM self shut-off function is malfunctioning.	

FAIL-SAFE MODE

ECM enters fail-safe mode when the malfunction A is detected.

Detected items	Engine operation condition in fail-safe mode
Malfunction A	• ECM stops the electric throttle control actuator control, throttle valve is maintained at a fixed opening (approx. 5 degrees) by the return spring. • ECM deactivates ASCD operation.

DTC Confirmation Procedure

INFOID:0000000001351682

Perform PROCEDURE FOR MALFUNCTION A first. If the 1st trip DTC cannot be confirmed, perform PROCEDURE FOR MALFUNCTION B. If there is no malfunction on PROCEDURE FOR MALFUNCTION B, perform PROCEDURE FOR MALFUNCTION C.

NOTE:

If DTC Confirmation Procedure has been previously conducted, always turn ignition switch OFF and wait at least 10 seconds before conducting the next test.

PROCEDURE FOR MALFUNCTION A

With CONSULT-III

1. Turn ignition switch ON.
2. Check 1st trip DTC.
3. If 1st trip DTC is detected, go to EC-292, "Diagnosis Procedure"

With GST

Follow the procedure “With CONSULT-III” above.

PROCEDURE FOR MALFUNCTION B

With CONSULT-III

1. Turn ignition switch ON and wait at least 1 second.
2. Turn ignition switch OFF, wait at least 10 seconds and then turn ON.
3. Check 1st trip DTC.
4. If 1st trip DTC is detected, go to EC-292, "Diagnosis Procedure".

With GST

Follow the procedure “With CONSULT-III” above.

PROCEDURE FOR MALFUNCTION C

With CONSULT-III
1. Turn ignition switch ON and wait at least 1 second.
2. Turn ignition switch OFF, wait at least 10 seconds and then turn ON.
3. Repeat step 2 for 32 times.
4. Check 1st trip DTC.
5. If 1st trip DTC is detected, go to EC-292, "Diagnosis Procedure".

With GST
Follow the procedure “With CONSULT-III” above.

Diagnosis Procedure

INFOID:0000000001351683

1. INSPECTION START

With CONSULT-III
1. Turn ignition switch ON.
2. Select “SELF DIAG RESULTS” mode with CONSULT-III.
3. Touch “ERASE”.
4. **Perform DTC Confirmation Procedure.**
   See EC-291, "DTC Confirmation Procedure".
5. Is the 1st trip DTC P0605 displayed again?

With GST
1. Turn ignition switch ON.
2. Select Service $04 with GST.
3. **Perform DTC Confirmation Procedure.**
   See EC-291, "DTC Confirmation Procedure".
4. Is the 1st trip DTC P0605 displayed again?

Yes or No

Yes >> GO TO 2.
No >> **INSPECTION END**

2. REPLACE ECM

1. Replace ECM.
2. Perform initialization of IVIS(NATS) system and registration of all IVIS(NATS) ignition key IDs. Refer to SEC-8, "ECM RE-COMMUNICATING FUNCTION : Special Repair Requirement".
3. Perform EC-17, "VIN Registration".
4. Perform EC-18, "Accelerator Pedal Released Position Learning".
5. Perform EC-18, "Throttle Valve Closed Position Learning" .
6. Perform EC-18, "Idle Air Volume Learning" .

>> **INSPECTION END**

P0643 SENSOR POWER SUPPLY

On Board Diagnosis Logic

INFOID:0000000001351684

This self-diagnosis has the one trip detection logic.

DTC No.	Trouble diagnosis name	DTC detecting condition	Possible cause
P0643 0643	Sensor power supply circuit short	ECM detects a voltage of power source for sensor is excessively low or high.	• Harness or connectors (APP sensor 1 circuit is shorted.) (PSP sensor circuit is shorted.) (Battery current sensor circuit is shorted.) (Refrigerant pressure sensor circuit is shorted.) (EVAP control system pressure sensor circuit is shorted.) • Accelerator pedal position sensor • Power steering pressure sensor • Refrigerant pressure sensor • EVAP control system pressure sensor

FAIL-SAFE MODE

When the malfunction is detected, ECM enters fail-safe mode and the MIL lights up.

Engine operation condition in fail-safe mode
ECM stops the electric throttle control actuator control, throttle valve is maintained at a fixed opening (approx. 5 degrees) by the return spring.

DTC Confirmation Procedure

INFOID:0000000001351685

NOTE:
If DTC Confirmation Procedure has been previously conducted, always turn ignition switch OFF and wait at least 10 seconds before conducting the next test.

TESTING CONDITION:
Before performing the following procedure, confirm that battery voltage is more than 10V at idle.

WITH CONSULT-III

1. Start engine and let it idle for 1 second.
2. Check DTC.
3. If DTC is detected, go to EC-293, "Diagnosis Procedure".

WITH GST

Follow the procedure “WITH CONSULT-III” above.

Diagnosis Procedure

INFOID:0000000001351687

1. CHECK GROUND CONNECTIONS

1. Turn ignition switch OFF.
2. Loosen and retighten three ground screws on the body.
   Refer to EC-86, "Ground Inspection".

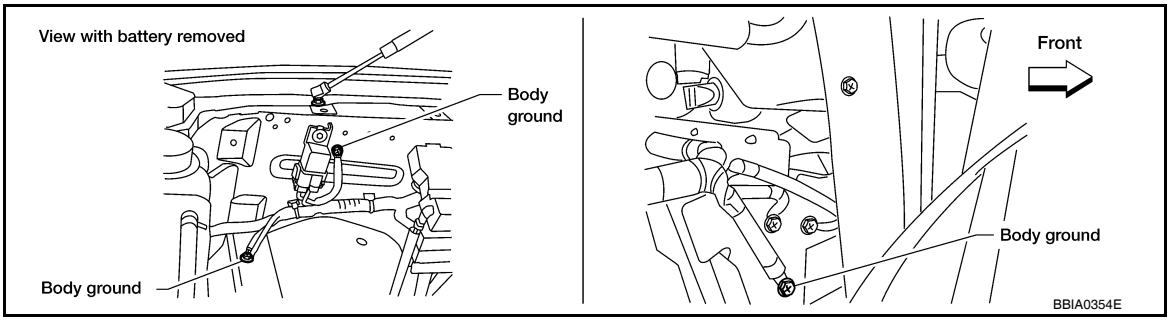

OK or NG

OK >> GO TO 2.
NG >> Repair or replace ground connections.

2. CHECK APP SENSOR 1 POWER SUPPLY CIRCUIT

1. Disconnect accelerator pedal position (APP) sensor harness connector.
2. Turn ignition switch ON.

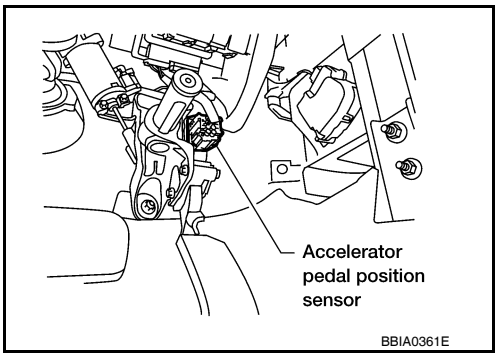

3. Check voltage between APP sensor terminal 7 and ground with CONSULT-III or tester.

Voltage: Approximately 5V

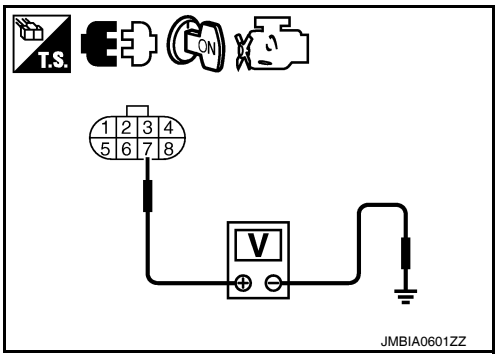

OK or NG
OK >> GO TO 5.
NG >> GO TO 3.

3. CHECK SENSOR POWER SUPPLY CIRCUITS

Check harness for short to power and short to ground, between the following terminals

ECM terminal	Sensor terminal	Reference Wiring Diagram
48	EVAP control system pressure sensor terminal 3	EC-439, "Wiring Diagram - ENGINE CONTROL SYSTEM -"
49	Refrigerant pressure sensor terminal 1	
	Battery current sensor terminal 1	
68	Power steering pressure sensor terminal 1	
90	APP sensor terminal 7	

OK or NG
OK >> GO TO 4.
NG >> Repair short to ground or short to power in harness or connectors.

4. CHECK COMPONENTS

Check the following.
- EVAP control system pressure sensor (Refer to EC-253, "Component Inspection".)
- Power steering pressure sensor (Refer to EC-288, "Component Inspection".)
- Battery current sensor (Refer to EC-318, "Component Inspection".)
- Refrigerant pressure sensor

OK or NG
OK >> GO TO 7.
NG >> Replace malfunctioning components.

5. CHECK ACCELERATOR PEDAL POSITION SENSOR

Refer to EC-384, "Component Inspection".

OK or NG
OK >> GO TO 7.
NG >> GO TO 6.

6. REPLACE ACCELERATOR PEDAL ASSEMBLY

1. Replace accelerator pedal position assembly.
2. Perform EC-18, "Accelerator Pedal Released Position Learning".
3. Perform EC-18, "Throttle Valve Closed Position Learning".
4. Perform EC-18, "Idle Air Volume Learning".

>> **INSPECTION END**

7. CHECK INTERMITTENT INCIDENT

Refer to GI-35, "How to Check Terminal" and GI-38, "Intermittent Incident".

>> **INSPECTION END**

P0850 PNP SWITCH

Component Description

INFOID:0000000001351688

When the gear position is P or N, transmission range switch is ON.
TCM detects the position because the continuity of the line (the ON signal) exists.
Then the TCM sends the PNP signal to the ECM via combination meter.

On Board Diagnosis Logic

INFOID:0000000001351690

DTC No.	Trouble diagnosis name	DTC detecting condition	Possible cause
P0850 0850	Park/neutral position switch	The park/neutral position (PNP) signal is not changed in the process of engine starting and driving.	• Harness or connectors [The park/neutral position (PNP) signal circuit is open or shorted.] • Combination meter • TCM

DTC Confirmation Procedure

INFOID:0000000001351691

CAUTION:
Always drive vehicle at a safe speed.
NOTE:
If DTC Confirmation Procedure has been previously conducted, always turn ignition switch OFF and wait at least 10 seconds before conducting the next test.

WITH CONSULT-III

1. Turn ignition switch ON.
2. Select “P/N POSI SW” in “DATA MONITOR” mode with CONSULT-III. Then check the “P/N POSI SW” signal under the following conditions.

Position (Selector lever)	Known-good signal
N or P position	ON
Except the above position	OFF

If NG, go to EC-297, "Diagnosis Procedure".
If OK, go to following step.

3. Select “DATA MONITOR” mode with CONSULT-III.
4. Start engine and warm it up to normal operating temperature.
5. Maintain the following conditions for at least 60 consecutive seconds.

ENG SPEED	1,000 - 6,375 rpm
COOLAN TEMP/S	More than 70°C (158°F)
B/FUEL SCHDL	2.0 - 31.8 msec
VHCL SPEED SE	More than 64 km/h (40 MPH)
Selector lever	Suitable position

6. Check 1st trip DTC.
7. If 1st trip DTC is detected, go to EC-297, "Diagnosis Procedure".

Overall Function Check

INFOID:0000000001351692

Use this procedure to check the overall function of the park/neutral position (PNP) signal circuit. During this check, a 1st trip DTC might not be confirmed.

WITH GST

1. Turn ignition switch ON.

2. Check voltage between ECM terminal 102 (PNP signal) and ground under the following conditions.

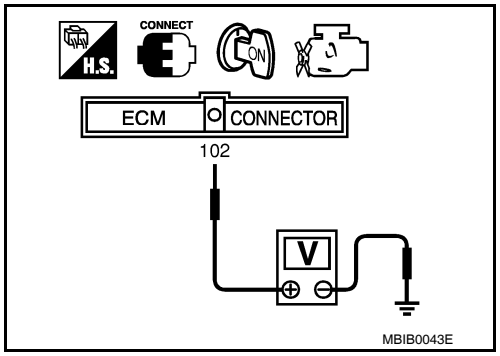

Condition (Gear position)	Voltage V (Known-good data)
P or N position	Approx. 0
Except the above position	BATTERY VOLTAGE (11 - 14V)

3. If NG, go to EC-297, "Diagnosis Procedure".

Diagnosis Procedure

INFOID:0000000001351694

1. CHECK DTC WITH TCM

Refer to TM-30, "OBD-II Diagnostic Trouble Code (DTC)".

OK or NG

OK >> GO TO 2.
NG >> Repair or replace.

2. CHECK STARTING SYSTEM

Turn ignition switch OFF, then turn it to START.
Does starter motor operate?

Yes or No

Yes >> GO TO 3.
No >> Refer to STR-17.

3. CHECK PNP INPUT SIGNAL CIRCUIT FOR OPEN AND SHORT-I

1. Turn ignition switch OFF.
2. Disconnect A/T assembly harness connector.
3. Disconnect combination meter harness connector.
4. Check harness continuity between A/T assembly terminal 9 and combination meter terminal 8. Refer to Wiring Diagram.

Continuity should exist.

5. Also check harness for short to ground and short to power.

OK or NG

OK >> GO TO 5.
NG >> GO TO 4.

4. DETECT MALFUNCTIONING PART

Check the following.
- Harness connectors F14, E5
- Harness connectors E152, M31
- Harness for open or short between A/T assembly and combination meter

>> Repair open circuit or short to ground or short to power in harness or connectors.

5. CHECK PNP INPUT SIGNAL CIRCUIT FOR OPEN AND SHORT-II

1. Disconnect ECM harness connector.
2. Check harness continuity between ECM terminal 102 and combination meter terminal 7. Refer to Wiring Diagram.

Continuity should exist.

3. Also check harness for short to ground and short to power.

OK or NG

OK >> GO TO 7.

NG >> GO TO 6.

6. DETECT MALFUNCTIONING PART

Check the following.
- Harness connectors M31, E152
- Harness for open or short between ECM and combination meter

>> Repair open circuit or short to ground or short to power in harness or connectors.

7. CHECK PNP INPUT SIGNAL CIRCUIT FOR OPEN AND SHORT-III

1. Disconnect TCM harness connector.
2. Check harness continuity between TCM terminal 8 and A/T assembly terminal 9.
   Refer to Wiring Diagram.

Continuity should exist.

3. Also check harness for short to ground and short to power.

OK or NG

OK >> GO TO 8.
NG >> Repair open circuit or short to ground or short to power in harness or connectors.

8. CHECK INTERMITTENT INCIDENT

Refer to GI-35, "How to Check Terminal" and GI-38, "Intermittent Incident".

OK or NG

OK >> GO TO 9.
NG >> Repair or replace.

9. REPLACE COMBINATION METER

Refer to MWI-76, "Removal and Installation".

>> **INSPECTION END**

P1140, P1145 IVT CONTROL POSITION SENSOR

Component Description

INFOID:0000000001351695

Intake valve timing control position sensors are located in the front of cylinder heads in both bank 1 and bank 2.
This sensor uses a Hall IC.
The cam position is determined by the intake camshaft sprocket concave (in four places). The ECM provides feedback to the intake valve timing control for appropriate target valve open-close timing according to drive conditions based on detected cam position.

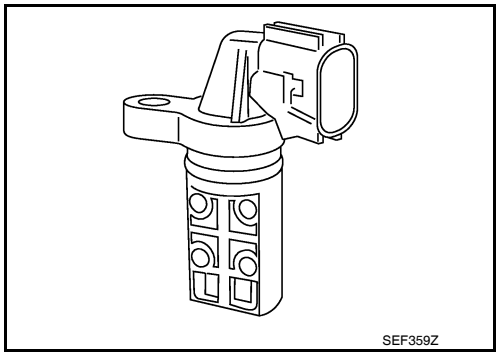

On Board Diagnosis Logic

INFOID:0000000001351697

DTC No.	Trouble diagnosis name	DTC detecting condition	Possible cause
P1140 1140 (Bank 1)	Intake valve timing control position sensor circuit	An excessively high or low voltage from the sensor is sent to ECM.	• Harness or connectors (Intake valve timing control position sensor circuit is open or shorted) • Intake valve timing control position sensor • Crankshaft position sensor (POS) • Camshaft position sensor (PHASE) • Accumulation of debris to the signal pick-up portion of the camshaft sprocket
P1145 1145 (Bank 2)			

DTC Confirmation Procedure

INFOID:0000000001351698

NOTE:
If DTC Confirmation Procedure has been previously conducted, always turn ignition switch OFF and wait at least 10 seconds before conducting the next test.

WITH CONSULT-III

1. Turn ignition switch ON.
2. Select “DATA MONITOR” mode with CONSULT-III.
3. Maintain the following conditions for at least 10 seconds.

ENG SPEED	More than idle speed
Selector lever	P or N position

4. Check 1st trip DTC.
5. If 1st trip DTC is detected, go to EC-299, "Diagnosis Procedure".

WITH GST

Follow the procedure “WITH CONSULT-III” above.

Diagnosis Procedure

INFOID:0000000001351700

1. CHECK GROUND CONNECTIONS

1. Turn ignition switch OFF.
2. Loosen and retighten three ground screws on the body.

Refer to EC-86, "Ground Inspection".

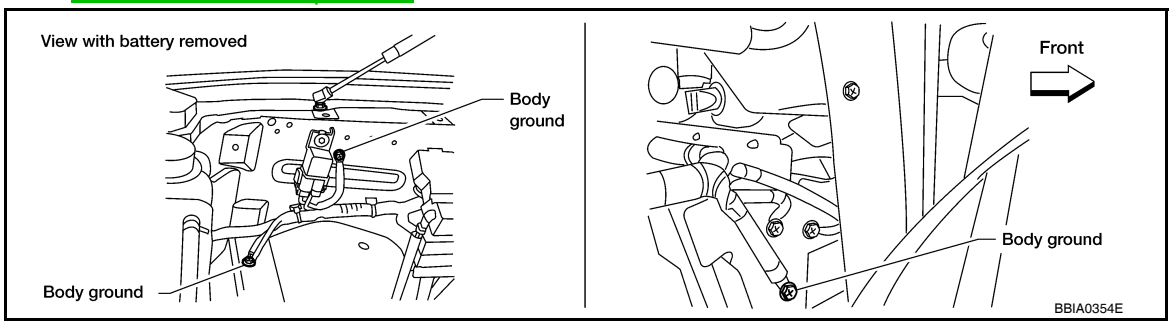

OK or NG

OK >> GO TO 2.
NG >> Repair or replace ground connections.

2. CHECK INTAKE VALVE TIMING CONTROL POSITION SENSOR POWER SUPPLY CIRCUIT

1. Disconnect intake valve timing control position sensor harness connector.

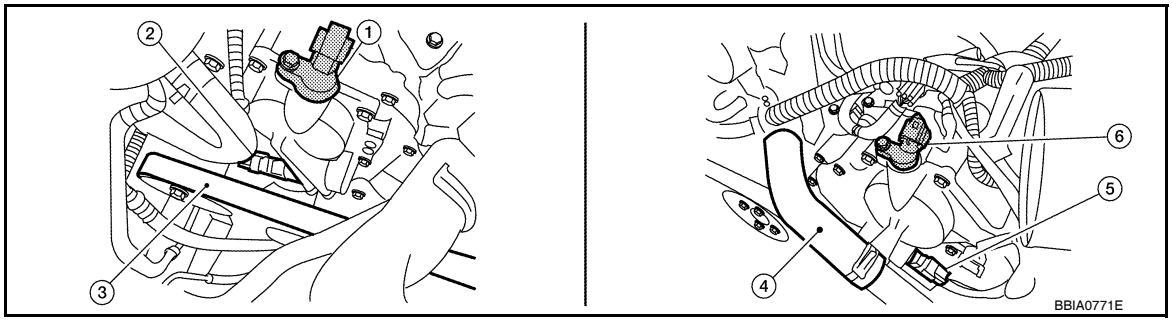

1. Intake valve timing control position sensor (bank 2)	2. Intake valve timing control solenoid valve (bank 2)	3. Drive belt
4. Radiator hose	5. Intake valve timing control solenoid valve (bank 1)	6. Intake valve timing control position sensor (bank 1)

2. Turn ignition switch ON.
3. Check voltage between intake valve timing control position sensor terminal 3 and ground with CONSULT-III or tester.

Voltage: Battery voltage

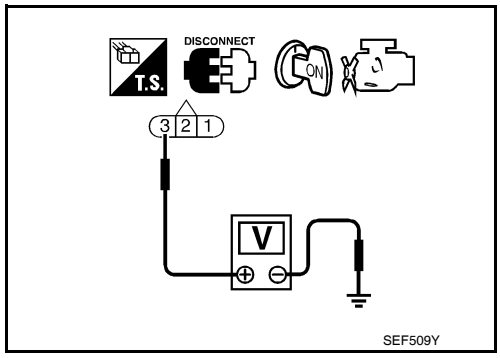

OK or NG

OK >> GO TO 4.
NG >> GO TO 3.

3. DETECT MALFUNCTIONING PART

Check the following.
- Harness connectors E2, F32
- Harness for open or short between intake valve timing control position sensor and IPDM E/R
- Harness for open or short between intake valve timing control position sensor and ECM

>> Repair open circuit or short to ground or short to power in harness or connectors.

4. CHECK INTAKE VALVE TIMING CONTROL POSITION SENSOR GROUND CIRCUIT FOR OPEN AND SHORT

1. Turn ignition switch OFF.
2. Check harness continuity between intake valve timing control position sensor terminal 1 and ground. Refer to Wiring Diagram.

Continuity should exist.

3. Also check harness for short to power.

OK or NG

OK >> GO TO 6.
NG >> GO TO 5.

5. DETECT MALFUNCTIONING PART

Check the following.
- Harness connectors E2, F32
- Harness for open or short between intake valve timing control position sensor and ground

>> Repair open circuit or short to power in harness or connectors.

6. CHECK INTAKE VALVE TIMING CONTROL POSITION SENSOR INPUT SIGNAL CIRCUIT FOR OPEN AND SHORT

1. Disconnect ECM harness connector.
2. Check harness continuity between the following;
   ECM terminal 72 and intake valve timing control position sensor (Bank 1) terminal 2 or
   ECM terminal 53 and intake valve timing control position sensor (Bank 2) terminal 2.
   Refer to Wiring Diagram.

Continuity should exist.

3. Also check harness for short to ground and short to power.

OK or NG

OK >> GO TO 7.
NG >> Repair open circuit or short to ground or short to power in harness or connectors.

7. CHECK INTAKE VALVE TIMING CONTROL POSITION SENSOR

Refer to EC-302, "Component Inspection".

OK or NG

OK >> GO TO 8.
NG >> Replace malfunctioning intake valve timing control position sensor. Refer to EC-501.

8. CHECK CRANKSHAFT POSITION SENSOR (POS)

Refer to EC-209, "Component Inspection".

OK or NG

OK >> GO TO 9.
NG >> Replace crankshaft position sensor (POS).

9. CHECK CAMSHAFT POSITION SENSOR (PHASE)

Refer to EC-213, "Component Inspection".

OK or NG

OK >> GO TO 10.
NG >> Replace camshaft position sensor (PHASE). Refer to EC-501.

10. CHECK CAMSHAFT SPROCKET

Check accumulation of debris to the signal pick-up portion of the camshaft sprocket. Refer to EM-62, "Inspection after Installation".

OK or NG

OK >> GO TO 11.
NG >> Remove debris and clean the signal pick-up cutout of camshaft sprocket.

11. CHECK INTERMITTENT INCIDENT

Refer to GI-35, "How to Check Terminal" and GI-38, "Intermittent Incident".

>> **INSPECTION END**

Component Inspection

INFOID:0000000001351701

INTAKE VALVE TIMING CONTROL POSITION SENSOR

1. Disconnect intake valve timing control position sensor harness connector.
2. Loosen the fixing bolt of the sensor.
3. Remove the sensor.
4. Visually check the sensor for chipping.

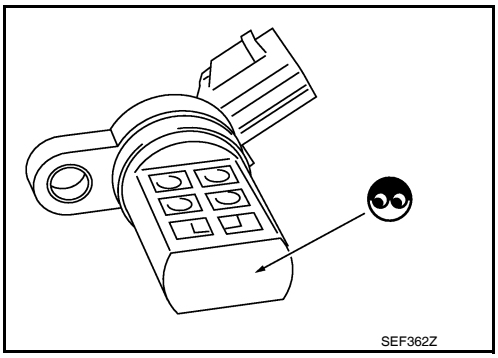

5. Check resistance as shown below.

Terminal No. (Polarity)	Resistance Ω [at 25°C (77°F)]
3 (+) - 1 (-)	Except 0 or ∞
2 (+) - 1 (-)	
3 (+) - 2 (-)	

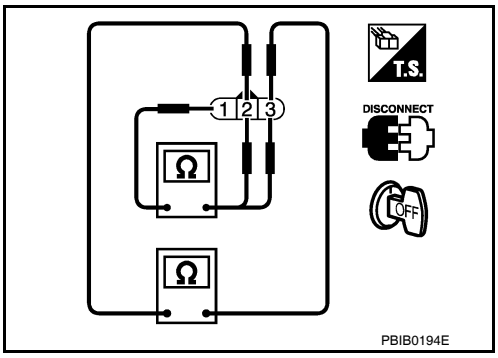

6. If NG, replace intake valve timing control position sensor. Refer to EC-501.

P1148, P1168 CLOSED LOOP CONTROL

On Board Diagnosis Logic

INFOID:0000000001351703

These self-diagnoses have the one trip detection logic.

DTC No.	Trouble diagnosis name	DTC detecting condition	Possible cause
P1148 1148 (Bank 1)	Closed loop control function	The closed loop control function for bank 1 does not operate even when vehicle is driving in the specified condition.	• Harness or connectors [The air fuel ratio (A/F) sensor 1 circuit is open or shorted.] • Air fuel ratio (A/F) sensor 1 • Air fuel ratio (A/F) sensor 1 heater
P1168 1168 (Bank 2)		The closed loop control function for bank 2 does not operate even when vehicle is driving in the specified condition.	

DTC P1148 or P1168 is displayed with another DTC for air fuel ratio (A/F) sensor 1.
Perform the trouble diagnosis for the corresponding DTC.

P1211 TCS CONTROL UNIT

Description

INFOID:0000000001351704

The malfunction information related to TCS is transferred through the CAN communication line from “ABS actuator and electric unit (control unit)” to ECM.
Be sure to erase the malfunction information such as DTC not only for “ABS actuator and electric unit (control unit)” but also for ECM after TCS related repair.

On Board Diagnosis Logic

INFOID:0000000001351705

Freeze frame data is not stored in the ECM for this self-diagnosis.
The MIL will not light up for this self-diagnosis.

DTC No.	Trouble diagnosis name	DTC detecting condition	Possible cause
P1211 1211	TCS control unit	ECM receives a malfunction information from “ABS actuator electric unit (control unit)”	• ABS actuator and electric unit (control unit) • TCS related parts

DTC Confirmation Procedure

INFOID:0000000001351706

TESTING CONDITION:
Before performing the following procedure, confirm that battery voltage is more than 10.5V at idle.

WITH CONSULT-III

1. Start engine and let it idle for at least 60 seconds.
2. Check 1st trip DTC.
3. If 1st trip DTC is detected, go to EC-304, "Diagnosis Procedure".

WITH GST

Follow the procedure “WITH CONSULT-III” above.

Diagnosis Procedure

INFOID:0000000001351707

Go to BRC-24, "CONSULT-III Function (ABS)".

P1212 TCS COMMUNICATION LINE

Description

INFOID:0000000001351708

NOTE:
- **If DTC P1212 is displayed with DTC U1000 or U1001, first perform the trouble diagnosis for DTC U1000, U1001. Refer to EC-87 .**
- **If DTC P1212 is displayed with DTC U1010, first perform the trouble diagnosis for DTC U1010. Refer to EC-88 .**

This CAN communication line is used to control the smooth engine operation during the TCS operation. Pulse signals are exchanged between ECM and “ABS actuator and electric unit (control unit)”.
Be sure to erase the malfunction information such as DTC not only for “ABS actuator and electric unit (control unit)” but also for ECM after TCS related repair.

On Board Diagnosis Logic

INFOID:0000000001351709

Freeze frame data is not stored in the ECM for this self-diagnosis.
The MIL will not light up for this self-diagnosis.

DTC No.	Trouble diagnosis name	DTC detecting condition	Possible cause
P1212 1212	TCS communication line	ECM can not receive the information from “ABS actuator and electric unit (control unit)” continuously.	• Harness or connectors (The CAN communication line is open or shorted.) • ABS actuator and electric unit (control unit) • Dead (Weak) battery

DTC Confirmation Procedure

INFOID:0000000001351710

TESTING CONDITION:
Before performing the following procedure, confirm that battery voltage is more than 10.5V at idle.

WITH CONSULT-III

1. Start engine and let it idle for at least 10 seconds.
2. Check 1st trip DTC.
3. If 1st trip DTC is detected, go to EC-305, "Diagnosis Procedure".

WITH GST

Follow the procedure “WITH CONSULT-III” above.

Diagnosis Procedure

INFOID:0000000001351711

Go to BRC-24, "CONSULT-III Function (ABS)".

P1217 ENGINE OVER TEMPERATURE

On Board Diagnosis Logic

INFOID:0000000001351714

NOTE:
- **If DTC P1217 is displayed with DTC U1000 or U1001, first perform the trouble diagnosis for DTC U1000, U1001. Refer to EC-87.**
- **If DTC P1217 is displayed with DTC U1010, first perform the trouble diagnosis for DTC U1010. Refer to EC-88.**

If the cooling fan or another component in the cooling system malfunctions, engine coolant temperature will rise.
When the engine coolant temperature reaches an abnormally high temperature condition, a malfunction is indicated.
This self-diagnosis has the one trip detection logic.

DTC No.	Trouble diagnosis name	DTC detecting condition	Possible cause
P1217 1217	Engine over temperature (Overheat)	• Cooling fan does not operate properly (Overheat). • Cooling fan system does not operate properly (Overheat). • Engine coolant was not added to the system using the proper filling method. • Engine coolant is not within the specified range.	• Harness or connectors (The cooling fan circuit is open or shorted.) • Cooling fan • Cooling fan (crankshaft diven) • IPDM E/R (Cooling fan relay) • Radiator hose • Radiator • Radiator cap • Reservoir tank • Reservoir tank cap • Water pump • Thermostat For more information, refer to EC-308, "Main 13 Causes of Overheating".

CAUTION:
When a malfunction is indicated, be sure to replace the coolant. Refer to CO-11, "Changing Engine Coolant". Also, replace the engine oil. Refer to LU-9, "Changing Engine Oil".
1. **Fill radiator with coolant up to specified level with a filling speed of 2 liters per minute. Be sure to use coolant with the proper mixture ratio. Refer to CO-10.**
2. **After refilling coolant, run engine to ensure that no water-flow noise is emitted.**

Overall Function Check

INFOID:0000000001351715

Use this procedure to check the overall function of the cooling fan. During this check, a DTC might not be confirmed.

WARNING:
Never remove the radiator cap and/or reservoir tank cap when the engine is hot. Serious burns could be caused by high pressure fluid escaping from the radiator and/or reservoir tank.
Wrap a thick cloth around cap. Carefully remove the cap by turning it a quarter turn to allow built-up pressure to escape. Then turn the cap all the way off.

WITH CONSULT-III

1. Check the coolant level in the reservoir tank and radiator.
   Allow engine to cool before checking coolant level.
   If the coolant level in the reservoir tank and/or radiator is below the proper range, skip the following steps and go to EC-395, "Diagnosis Procedure".
2. Confirm whether customer filled the coolant or not. If customer filled the coolant, skip the following steps and go to EC-395, "Diagnosis Procedure".
3. Turn ignition switch ON.

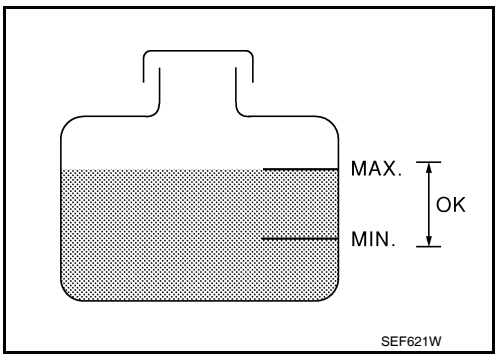

4. Perform “COOLING FAN” in “ACTIVE TEST” mode with CONSULT-III.
5. If the results are NG, go to EC-395, "Diagnosis Procedure".

WITH GST

1. Check the coolant level in the reservoir tank and radiator.
   Allow engine to cool before checking coolant level.
   If the coolant level in the reservoir tank and/or radiator is below the proper range, skip the following steps and go to EC-395, "Diagnosis Procedure".
2. Confirm whether customer filled the coolant or not. If customer filled the coolant, skip the following steps and go to EC-395, "Diagnosis Procedure".
3. Disconnect engine coolant temperature sensor harness connector.
4. Connect 150Ω resistor to engine coolant temperature sensor harness connector.

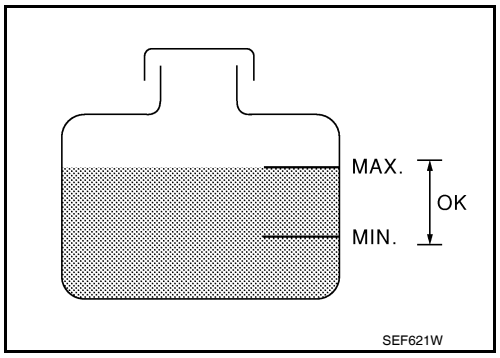

5. Start engine and make sure that cooling fan operates.
   CAUTION:
   Be careful not to overheat engine.
6. If NG, go to EC-395, "Diagnosis Procedure".

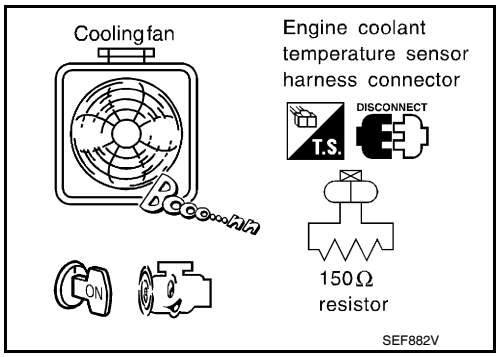

Diagnosis Procedure

INFOID:0000000001351717

1. CHECK COOLING FAN (CRANKSHAFT DRIVEN) OPERATION

1. Start engine and let it idle.
2. Make sure that cooling fan (crankshaft driven) operates normally.

OK or NG

OK (With CONSULT-III)>>GO TO 2.
OK (Without CONSULT-III)>>GO TO 3.
NG >> Check cooling fan (crankshaft driven). Refer to CO-18, "Removal and Installation (Crankshaft Driven Type)".

2. CHECK COOLING FAN MOTOR OPERATION

With CONSULT-III

1. Start engine and let it idle.
2. Select “COOLING FAN” in “ACTIVE TEST” mode with CONSULT-III.
3. Make sure that cooling fan operates.

OK or NG

OK >> GO TO 4.
NG >> Check cooling fan control circuit. (Go to "PROCEDURE A".)

3. CHECK COOLING FAN MOTOR OPERATION

Without CONSULT-III

1. Disconnect engine coolant temperature sensor harness connector.
2. Connect 150Ω resistor to engine coolant temperature sensor harness connector.
3. Start engine and let it idle.

4. Make sure that cooling fan operates.

OK or NG

OK >> GO TO 4.
NG >> Check cooling fan control circuit. (Go to "PROCEDURE A".)

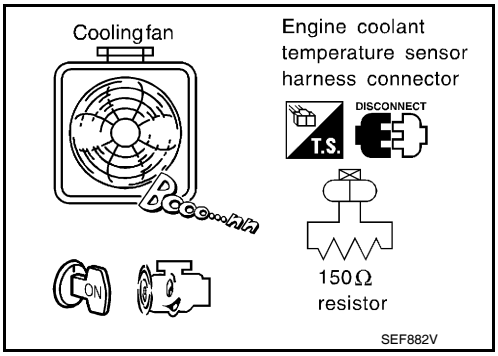

4. CHECK COOLING SYSTEM FOR LEAK

Refer to CO-10, "Inspection".

OK or NG

OK >> GO TO 5.
NG >> Check the following for leak.
- Hose
- Radiator
- Radiator cap
- Water pump
- Reservoir tank

5. CHECK COMPONENT PARTS

Check the following.
- RESERVOIR TANK CAP (Refer to CO-10, "Inspection".)
- Thermostat. (Refer to CO-22, "Removal and Installation".)
- Engine coolant temperature sensor. (Refer to EC-126, "Component Inspection".)

OK or NG

OK >> GO TO 6.
NG >> Replace malfunctioning component.

6. CHECK MAIN 13 CAUSES

If the cause cannot be isolated, go to EC-308, "Main 13 Causes of Overheating".

>> **INSPECTION END**

Main 13 Causes of Overheating

INFOID:0000000001351718

Engine	Step	Inspection item	Equipment	Standard	Reference page
OFF	1	• Blocked radiator • Blocked condenser • Blocked radiator grille • Blocked bumper	• Visual	No blocking	—
	2	• Coolant mixture	• Coolant tester	50 - 50% coolant mixture	CO-10
	3	• Coolant level	• Visual	Coolant up to MAX level in reservoir tank and radiator filler neck	CO-11, "Changing Engine Coolant"
	4	• Reservoir tank cap	• Pressure tester	95 - 125 kPa (0.97 - 1.28 kg/cm^2, 14 - 18 psi) (Limit)	CO-10, "Inspection"
ON*2	5	• Coolant leaks	• Visual	No leaks	CO-10, "Inspection"
ON*2	6	• Thermostat	• Touch the upper and lower radiator hoses	Both hoses should be hot	CO-22, "Removal and Installation"
ON*1	7	• Cooling fan	• CONSULT-III	Operating	See trouble diagnosis for DTC P1217 (EC-36).

Engine	Step	Inspection item	Equipment	Standard	Reference page
OFF	8	• Combustion gas leak	• Color checker chemical tester 4 Gas analyzer	Negative	—
ON*3	9	• Coolant temperature gauge	• Visual	Gauge less than 3/4 when driving	—
		• Coolant overflow to reservoir tank	• Visual	No overflow during driving and idling	CO-11, "Changing Engine Coolant"
OFF*4	10	• Coolant return from reservoir tank to radiator	• Visual	Should be initial level in reservoir tank	CO-11, "Changing Engine Coolant"
OFF	12	• Cylinder head	• Straight gauge feeler gauge	0.1 mm (0.004 in) Maximum distortion (warping)	EM-72, "Inspection After Disassembly"
	13	• Cylinder block and pistons	• Visual	No scuffing on cylinder walls or piston	EM-90, "Inspection After Disassembly"

*1: Turn the ignition switch ON.

*2: Engine running at 3,000 rpm for 10 minutes.

*3: Drive at 90 km/h (55 MPH) for 30 minutes and then let idle for 10 minutes.

*4: After 60 minutes of cool down time.

For more information, refer to CO-8, "Troubleshooting Chart".

P1225 TP SENSOR

Component Description

INFOID:0000000001351876

Electric throttle control actuator consists of throttle control motor, throttle position sensor, etc. The throttle position sensor responds to the throttle valve movement.
The throttle position sensor has the two sensors. These sensors are a kind of potentiometers which transform the throttle valve position into output voltage, and emit the voltage signal to the ECM. In addition, these sensors detect the opening and closing speed of the throttle valve and feed the voltage signals to the ECM. The ECM judges the current opening angle of the throttle valve from these signals and the ECM controls the throttle control motor to make the throttle valve opening angle properly in response to driving condition.

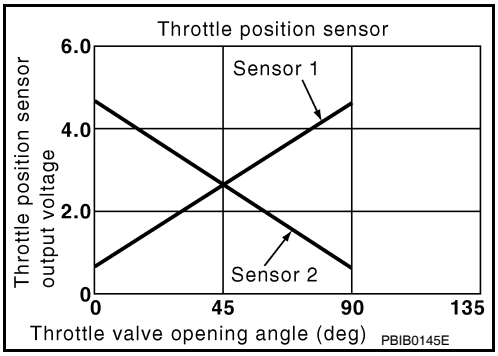

On Board Diagnosis Logic

INFOID:0000000001351877

The MIL will not light up for this self-diagnosis.

DTC No.	Trouble diagnosis name	DTC detecting condition	Possible cause
P1225 1225	Closed throttle position learning performance	Closed throttle position learning value is excessively low.	• Electric throttle control actuator (TP sensor 1 and 2)

DTC Confirmation Procedure

INFOID:0000000001351878

NOTE:
If DTC Confirmation Procedure has been previously conducted, always turn ignition switch OFF and wait at least 10 seconds before conducting the next test.
TESTING CONDITION:
Before performing the following procedure, confirm that battery voltage is more than 10V at idle.

WITH CONSULT-III

1. Turn ignition switch ON.
2. Turn ignition switch OFF and wait at least 10 seconds.
3. Turn ignition switch ON.
4. Check 1st trip DTC.
5. If 1st trip DTC is detected, go to EC-310, "Diagnosis Procedure".

WITH GST

Follow the procedure “WITH CONSULT-III” above.

Diagnosis Procedure

INFOID:0000000001351879

1. CHECK ELECTRIC THROTTLE CONTROL ACTUATOR VISUALLY

1. Turn ignition switch OFF.
2. Remove the intake air duct.
3. Check if foreign matter is caught between the throttle valve and the housing.

OK or NG

OK >> GO TO 2.
NG >> Remove the foreign matter and clean the electric throttle control actuator inside.

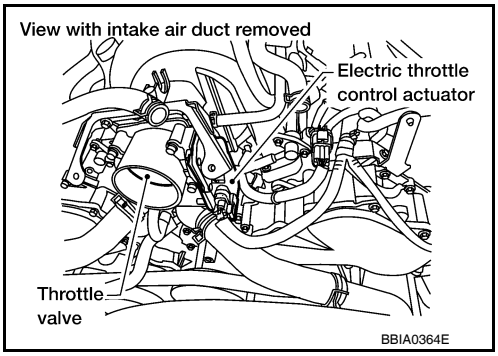

2. REPLACE ELECTRIC THROTTLE CONTROL ACTUATOR

1. Replace the electric throttle control actuator.
2. Perform EC-18, "Throttle Valve Closed Position Learning".
3. Perform EC-18, "Idle Air Volume Learning".

>> **INSPECTION END**

P1226 TP SENSOR

Component Description

INFOID:0000000001351881

Electric throttle control actuator consists of throttle control motor, throttle position sensor, etc. The throttle position sensor responds to the throttle valve movement.
The throttle position sensor has the two sensors. These sensors are a kind of potentiometers which transform the throttle valve position into output voltage, and emit the voltage signal to the ECM. In addition, these sensors detect the opening and closing speed of the throttle valve and feed the voltage signals to the ECM. The ECM judges the current opening angle of the throttle valve from these signals and the ECM controls the throttle control motor to make the throttle valve opening angle properly in response to driving condition.

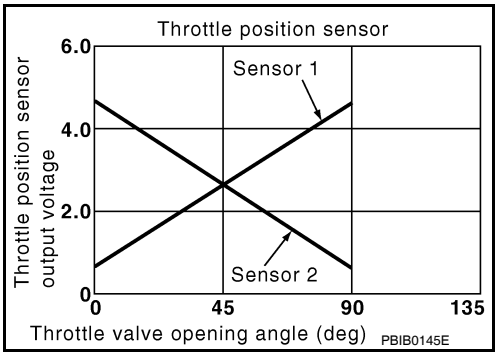

On Board Diagnosis Logic

INFOID:0000000001351882

The MIL will not light up for this self-diagnosis.

DTC No.	Trouble diagnosis name	DTC detecting condition	Possible cause
P1226 1226	Closed throttle position learning performance	Closed throttle position learning is not performed successfully, repeatedly.	• Electric throttle control actuator (TP sensor 1 and 2)

DTC Confirmation Procedure

INFOID:0000000001351883

NOTE:
If DTC Confirmation Procedure has been previously conducted, always turn ignition switch OFF and wait at least 10 seconds before conducting the next test.
TESTING CONDITION:
Before performing the following procedure, confirm that battery voltage is more than 10V at idle.

WITH CONSULT-III

1. Turn ignition switch ON.
2. Turn ignition switch OFF and wait at least 10 seconds.
3. Turn ignition switch ON.
4. Repeat steps 2 and 3 for 32 times.
5. Check 1st trip DTC.
6. If 1st trip DTC is detected, go to EC-312, "Diagnosis Procedure".

WITH GST

Follow the procedure “WITH CONSULT-III” above.

Diagnosis Procedure

INFOID:0000000001351884

1. CHECK ELECTRIC THROTTLE CONTROL ACTUATOR VISUALLY

1. Turn ignition switch OFF.
2. Remove the intake air duct.

3. Check if foreign matter is caught between the throttle valve and the housing.

OK or NG

OK >> GO TO 2.
NG >> Remove the foreign matter and clean the electric throttle control actuator inside.

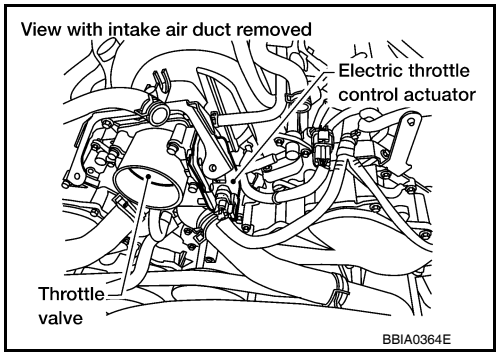

2. REPLACE ELECTRIC THROTTLE CONTROL ACTUATOR

1. Replace the electric throttle control actuator.
2. Perform EC-18, "Throttle Valve Closed Position Learning".
3. Perform EC-18, "Idle Air Volume Learning".

>> **INSPECTION END**

P1421 COLD START CONTROL

Description

INFOID:0000000001351886

ECM controls ignition timing and engine idle speed when engine is started with prewarming up condition. This control promotes the activation of three way catalyst by heating the catalyst and reduces emissions.

On Board Diagnosis Logic

INFOID:0000000001351887

DTC No.	Trouble diagnosis name	DTC detecting condition	Possible cause
P1421 1421	Cold start emission reduction strategy monitoring	ECM does not control ignition timing and engine idle speed properly when engine is started with prewarming up condition.	• Lack of intake air volume • Fuel injection system • ECM

DTC Confirmation Procedure

INFOID:0000000001351888

NOTE:
- If DTC Confirmation Procedure has been previously conducted, always turn ignition switch OFF and wait at least 10 seconds before conducting the next test.
- **If DTC P1421 is displayed with other DTC, first perform the trouble diagnosis for other DTC.**

TESTING CONDITION:
Before performing the following procedure, confirm that battery voltage is more than 11V at idle.

WITH CONSULT-III

1. Turn ignition switch OFF and wait at least 10 seconds.
2. Turn ignition switch ON.
3. Select “DATA MONITOR” mode with CONSULT-III.
4. Check that the “COOLAN TEMP/S” indication is between 4°C (39°F) and 36°C (97°F).
   If “COOLAN TEMP/S” indication is within the specified value, go to the following step.
   If “COOLANT TEMP/S” indication is out of the specified value, cool engine down or warm engine up and go to step 1.
5. Start engine and let it idle for 5 minutes.
6. Check 1st trip DTC.
7. If 1st trip DTC is detected, go to EC-314, "Diagnosis Procedure".

WITH GST

Follow the procedure “WITH CONSULT-III” above.

Diagnosis Procedure

INFOID:0000000001351889

1. PERFORM IDLE AIR VOLUME LEARNING

Perform EC-18, "Idle Air Volume Learning".
Is Idle Air Volume Learning carried out successfully?

Yes or No

Yes >> GO TO 2.
No >> Follow the instruction of Idle Air Volume Learning.

2. CHECK INTAKE SYSTEM

Check for the cause of intake air volume lacking. Refer to the following.
- Crushed intake air passage
- Intake air passage clogging

OK or NG

OK >> GO TO 3.
NG >> Repair or replace malfunctioning part

3. CHECK FUEL INJECTION SYSTEM FUNCTION

Perform EC-176, "DTC Confirmation Procedure" in DTC P0171, P0174 FUEL INJECTION SYSTEM FUNCTION.

OK or NG

OK >> GO TO 4.
NG >> Go to EC-179, "Diagnosis Procedure".

4. PERFORM DTC CONFIRMATION PROCEDURE

With CONSULT-III

1. Turn ignition switch ON.
2. Select “SELF DIAG RESULTS” mode with CONSULT-III.
3. Touch “ERASE”.
4. **Perform DTC Confirmation Procedure.**
   See EC-314, "DTC Confirmation Procedure".
5. Is the 1st trip DTC P1421 displayed again?

With GST

1. Turn ignition switch ON.
2. Select Service $04 with GST.
3. **Perform DTC Confirmation Procedure.**
   See EC-314, "DTC Confirmation Procedure".
4. Is the 1st trip DTC P1421 displayed again?

Yes or No

Yes >> GO TO 5.
No >> **INSPECTION END**

5. REPLACE ECM

1. Replace ECM.
2. Perform initialization of IVIS (NATS) system and registration of all IVIS (NATS) ignition key IDs.
   Refer to SEC-8, "ECM RE-COMMUNICATING FUNCTION : Special Repair Requirement".
3. Perform EC-17, "VIN Registration".
4. Perform EC-18, "Accelerator Pedal Released Position Learning".
5. Perform EC-18, "Throttle Valve Closed Position Learning".
6. Perform EC-18, "Idle Air Volume Learning".

>> **INSPECTION END**

P1550 BATTERY CURRENT SENSOR

Component Description

INFOID:0000000001351890

The power generation voltage variable control enables fuel consumption to be decreased by reducing the engine load which is caused by the power generation of the generator. The battery current sensor (1) is installed to the battery cable at the negative terminal. The sensor measures the charging/discharging current of the battery. Based on the sensor signal, ECM judges whether or not the power generation voltage variable control is performed. When performing the power generation voltage variable control, ECM calculates the target power generation voltage based on the sensor signal. And ECM sends the calculated value as the power generation command value to IPDM E/R. For the details of the power generation voltage variable control, refer to CHG-9, "System Description".

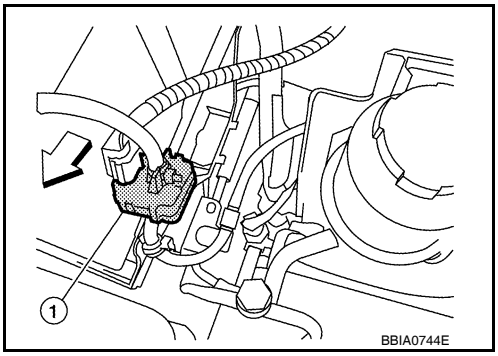

⇦: Vehicle front

CAUTION:

Do not connect the electrical component or the ground wire directly to the battery terminal. The connection causes the malfunction of the power generation voltage variable control, and then the battery discharge may occur.

On Board Diagnosis Logic

INFOID:0000000001351892

The MIL will not light up for this self-diagnosis.

NOTE:

If DTC P1550 is displayed with DTC P0643, first perform the trouble diagnosis for DTC P0643. Refer to EC-293.

DTC No.	Trouble diagnosis name	DTC detecting condition	Possible cause
P1550 1550	Battery current sensor circuit range/performance	The output voltage of the battery current sensor remains within the specified range while engine is running.	• Harness or connectors (The sensor circuit is open or shorted.) • Battery current sensor

DTC Confirmation Procedure

INFOID:0000000001351893

If DTC Confirmation Procedure has been previously conducted, always turn ignition switch OFF and wait at least 10 seconds before conducting the next test.

TESTING CONDITION:

Before performing the following procedure, confirm that battery voltage is more than 8V at idle.

WITH CONSULT-III

1. Start engine and wait at least 10 seconds.
2. Check 1st trip DTC.
3. If 1st trip DTC is detected, go to EC-316, "Diagnosis Procedure".

WITH GST

Follow the procedure “WITH CONSULT-III” above.

Diagnosis Procedure

INFOID:0000000001351895

1. CHECK GROUND CONNECTIONS

1. Turn ignition switch OFF.
2. Loosen and retighten ground screws on the body.

Refer to EC-86, "Ground Inspection".

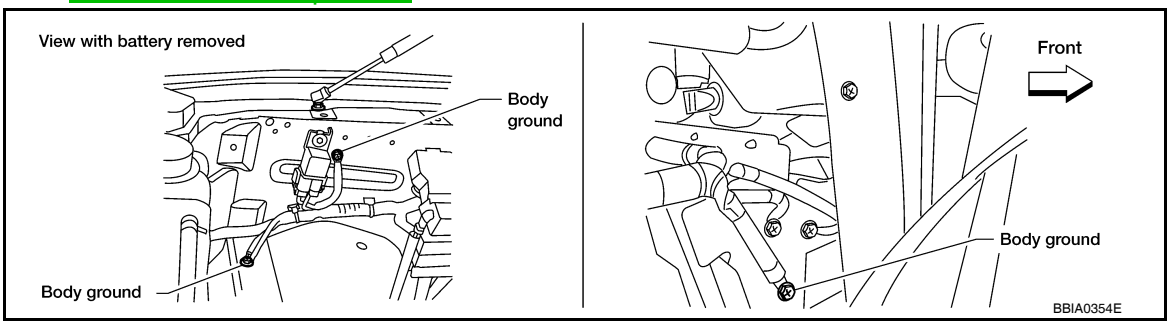

OK or NG

OK >> GO TO 2.
NG >> Repair or replace ground connections.

2. CHECK BATTERY CURRENT SENSOR POWER SUPPLY CIRCUIT

1. Disconnect battery current sensor (1) harness connector.
2. Turn ignition switch ON.
   ⇦: Vehicle front

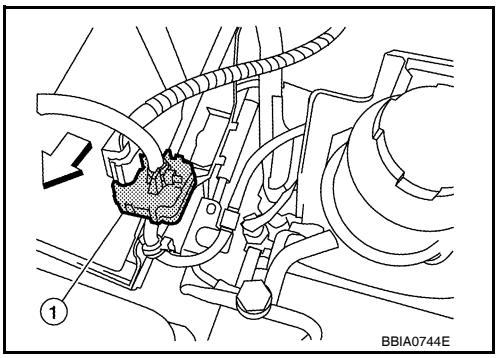

3. Check voltage between battery current sensor terminal 1 and ground with CONSULT-III or tester.

Voltage: Approximately 5V

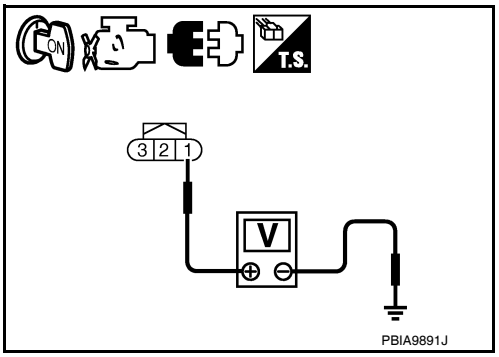

OK or NG

OK >> GO TO 4.
NG >> GO TO 3.

3. DETECT MALFUNCTIONING PART

Check the following.
- Harness connectors E5, F14
- Harness for open or short between battery current sensor and ECM

>> Repair open circuit or short to ground or short to power in harness or connectors.

4. CHECK BATTERY CURRENT SENSOR GROUND CIRCUIT FOR OPEN AND SHORT

1. Turn ignition switch OFF.
2. Disconnect ECM harness connector.
3. Check harness continuity between battery current sensor terminal 2 and ECM terminal 67.
   Refer to Wiring Diagram.

Continuity should exist.

4. Also check harness for short to ground and short to power.

OK or NG

OK >> GO TO 6.
NG >> GO TO 5.

5. DETECT MALFUNCTIONING PART

Check the following.
- Harness connectors E5, F14
- Harness for open or short between battery current sensor and ECM

>> Repair open circuit or short to ground or short to power in harness or connectors.

6. CHECK BATTERY CURRENT SENSOR INPUT SIGNAL CIRCUIT FOR OPEN AND SHORT

1. Check harness continuity between battery current sensor terminal 3 and ECM terminal 71. Refer to Wiring Diagram.

Continuity should exist.

2. Also check harness for short to ground and short to power.

OK or NG

OK >> GO TO 8.
NG >> GO TO 7.

7. DETECT MALFUNCTIONING PART

Check the following.
- Harness connectors E2, F32
- Harness for open or short between battery current sensor and ECM

>> Repair open circuit or short to ground or short to power in harness or connectors.

8. CHECK BATTERY CURRENT SENSOR

Refer to EC-318, "Component Inspection".

OK or NG

OK >> GO TO 9.
NG >> Replace battery negative cable assembly.

9. CHECK INTERMITTENT INCIDENT

Refer to GI-35, "How to Check Terminal" and GI-38, "Intermittent Incident".

>> **INSPECTION END**

Component Inspection

INFOID:0000000001351896

BATTERY CURRENT SENSOR

1. Reconnect harness connectors disconnected.
2. Disconnect battery negative cable (1).
3. Install jumper cable (A) between battery negative terminal and body ground.
4. Turn ignition switch ON.

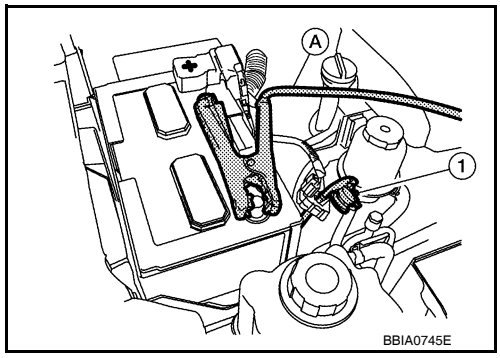

5. Check voltage between ECM terminal 71 (battery current sensor signal) and ground.

Voltage: Approximately 2.5V

6. If NG, replace battery negative cable assembly.

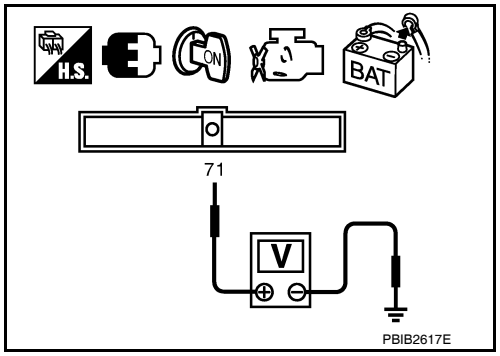

P1551, P1552 BATTERY CURRENT SENSOR

Component Description

INFOID:0000000001528770

The power generation voltage variable control enables fuel consumption to be decreased by reducing the engine load which is caused by the power generation of the generator. The battery current sensor (1) is installed to the battery cable at the negative terminal. The sensor measures the charging/discharging current of the battery. Based on the sensor signal, ECM judges whether or not the power generation voltage variable control is performed. When performing the power generation voltage variable control, ECM calculates the target power generation voltage based on the sensor signal. And ECM sends the calculated value as the power generation command value to IPDM E/R. For the details of the power generation voltage variable control, refer to CHG-9, "System Description".

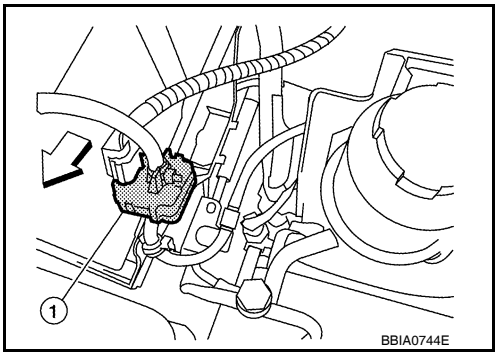

⇦: Vehicle front

CAUTION:

Do not connect the electrical component or the ground wire directly to the battery terminal. The connection causes the malfunction of the power generation voltage variable control, and then the battery discharge may occur.

On Board Diagnosis Logic

INFOID:0000000001528772

The MIL will not light up for these self-diagnoses.

NOTE:

If DTC P1551 or P1552 is displayed with DTC P0643, first perform the trouble diagnosis for DTC P0643. Refer to EC-293, "On Board Diagnosis Logic".

DTC No.	Trouble diagnosis name	DTC detecting condition	Possible cause
P1551 1551	Battery current sensor circuit low input	An excessively low voltage from the sensor is sent to ECM.	• Harness or connectors (The sensor circuit is open or shorted.) • Battery current sensor
P1552 1552	Battery current sensor circuit high input	An excessively high voltage from the sensor is sent to ECM.	

DTC Confirmation Procedure

INFOID:0000000001528773

If DTC Confirmation Procedure has been previously conducted, always turn ignition switch OFF and wait at least 10 seconds before conducting the next test.

TESTING CONDITION:

Before performing the following procedure, confirm that battery voltage is more than 8V with ignition switch ON

WITH CONSULT-III

1. Turn ignition switch ON.
2. Wait at least 10 seconds.
3. Check 1st trip DTC.
4. If 1st trip DTC is detected, go to EC-320, "Diagnosis Procedure".

WITH GST

Follow the procedure “WITH CONSULT-III” above.

Diagnosis Procedure

INFOID:0000000001528775

1. CHECK GROUND CONNECTIONS

1. Turn ignition switch OFF.
2. Loosen and retighten ground screws on the body.

Refer to EC-86, "Ground Inspection".

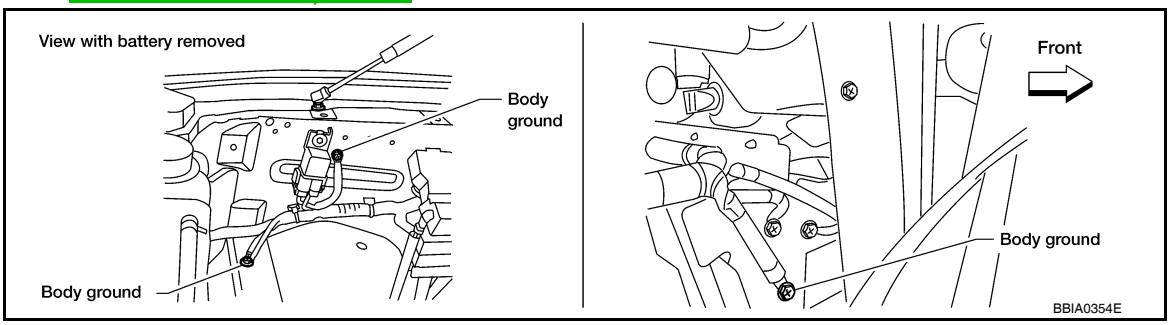

OK or NG

OK >> GO TO 2.
NG >> Repair or replace ground connections.

2. CHECK BATTERY CURRENT SENSOR POWER SUPPLY CIRCUIT

1. Disconnect battery current sensor (1) harness connector.
2. Turn ignition switch ON.
   ⇦: Vehicle front

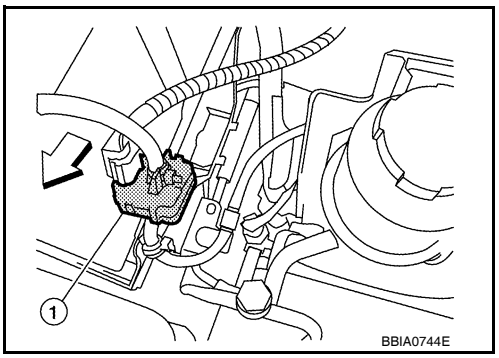

3. Check voltage between battery current sensor terminal 1 and ground with CONSULT-III or tester.

Voltage: Approximately 5V

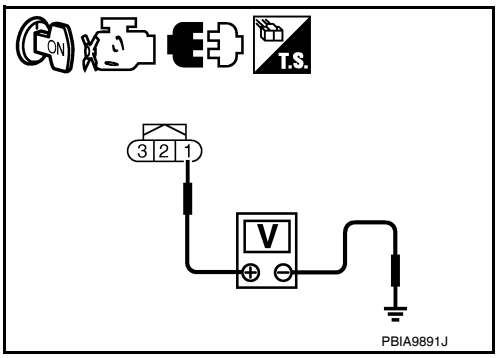

OK or NG

OK >> GO TO 4.
NG >> GO TO 3.

3. DETECT MALFUNCTIONING PART

Check the following.
- Harness connectors E5, F14
- Harness for open or short between battery current sensor and ECM

>> Repair open circuit or short to ground or short to power in harness or connectors.

4. CHECK BATTERY CURRENT SENSOR GROUND CIRCUIT FOR OPEN AND SHORT

1. Turn ignition switch OFF.
2. Disconnect ECM harness connector.
3. Check harness continuity between battery current sensor terminal 2 and ECM terminal 67.
   Refer to Wiring Diagram.

Continuity should exist.

4. Also check harness for short to ground and short to power.

OK or NG

OK >> GO TO 6.
NG >> GO TO 5.

5. DETECT MALFUNCTIONING PART

Check the following.
- Harness connectors E5, F14
- Harness for open or short between battery current sensor and ECM

>> Repair open circuit or short to ground or short to power in harness or connectors.

6. CHECK BATTERY CURRENT SENSOR INPUT SIGNAL CIRCUIT FOR OPEN AND SHORT

1. Check harness continuity between battery current sensor terminal 3 and ECM terminal 71. Refer to Wiring Diagram.

Continuity should exist.

2. Also check harness for short to ground and short to power.

OK or NG

OK >> GO TO 8.
NG >> GO TO 7.

7. DETECT MALFUNCTIONING PART

Check the following.
- Harness connectors E2, F32
- Harness for open or short between battery current sensor and ECM

>> Repair open circuit or short to ground or short to power in harness or connectors.

8. CHECK BATTERY CURRENT SENSOR

Refer to EC-322, "Component Inspection".

OK or NG

OK >> GO TO 9.
NG >> Replace battery negative cable assembly.

9. CHECK INTERMITTENT INCIDENT

Refer to GI-35, "How to Check Terminal" and GI-38, "Intermittent Incident".

>> **INSPECTION END**

Component Inspection

INFOID:0000000001528776

BATTERY CURRENT SENSOR

1. Reconnect harness connectors disconnected.
2. Disconnect battery negative cable (1).
3. Install jumper cable (A) between battery negative terminal and body ground.
4. Turn ignition switch ON.

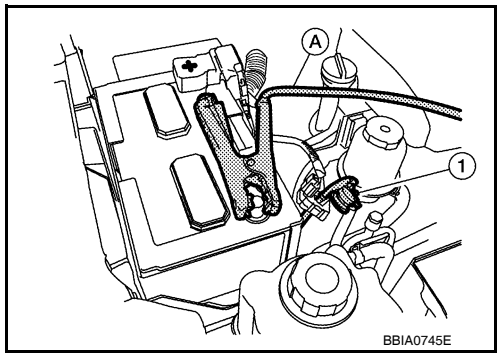

5. Check voltage between ECM terminal 71 (battery current sensor signal) and ground.

Voltage: Approximately 2.5V

6. If NG, replace battery negative cable assembly.

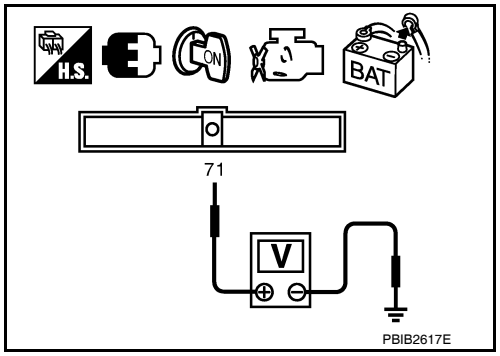

P1553 BATTERY CURRENT SENSOR

Component Description

INFOID:0000000001351904

The power generation voltage variable control enables fuel consumption to be decreased by reducing the engine load which is caused by the power generation of the generator. The battery current sensor (1) is installed to the battery cable at the negative terminal. The sensor measures the charging/discharging current of the battery. Based on the sensor signal, ECM judges whether or not the power generation voltage variable control is performed. When performing the power generation voltage variable control, ECM calculates the target power generation voltage based on the sensor signal. And ECM sends the calculated value as the power generation command value to IPDM E/R. For the details of the power generation voltage variable control, refer to CHG-9, "System Description".

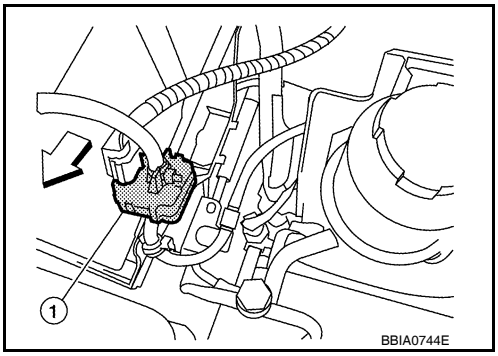

⇦: Vehicle front

CAUTION:

Do not connect the electrical component or the ground wire directly to the battery terminal. The connection causes the malfunction of the power generation voltage variable control, and then the battery discharge may occur.

On Board Diagnosis Logic

INFOID:0000000001351906

The MIL will not light up for this self-diagnosis.

NOTE:

If DTC P1553 is displayed with DTC P0643, first perform the trouble diagnosis for DTC P0643. Refer to EC-293.

DTC No.	Trouble diagnosis name	DTC detecting condition	Possible cause
P1553 1553	Battery current sensor performance	The signal voltage transmitted from the sensor to ECM is higher than the amount of the maximum power generation.	• Harness or connectors (The sensor circuit is open or shorted.) • Battery current sensor

DTC Confirmation Procedure

INFOID:0000000001351907

If DTC Confirmation Procedure has been previously conducted, always turn ignition switch OFF and wait at least 10 seconds before conducting the next test.

TESTING CONDITION:

Before performing the following procedure, confirm that battery voltage is more than 8V at idle.

WITH CONSULT-III

1. Start engine and wait at least 10 seconds.
2. Check 1st trip DTC.
3. If 1st trip DTC is detected, go to EC-324, "Diagnosis Procedure".

WITH GST

Follow the procedure “WITH CONSULT-III” above.

Diagnosis Procedure

INFOID:0000000001351909

1. CHECK GROUND CONNECTIONS

1. Turn ignition switch OFF.
2. Loosen and retighten ground screws on the body.

Refer to EC-86, "Ground Inspection".

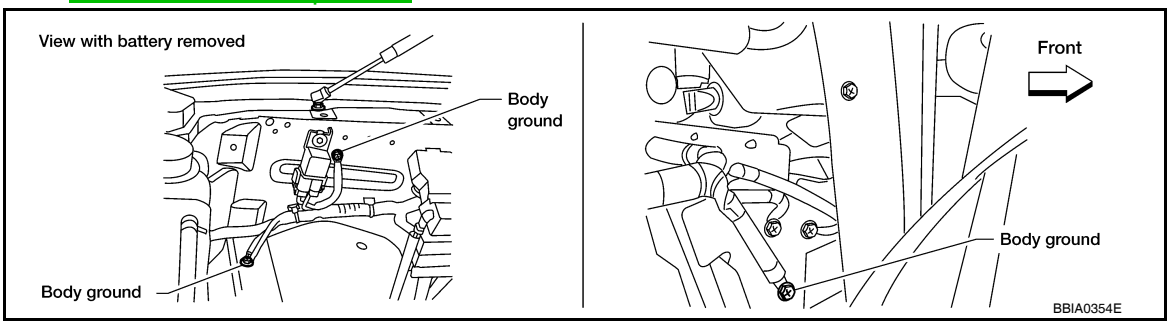

OK or NG

OK >> GO TO 2.
NG >> Repair or replace ground connections.

2. CHECK BATTERY CURRENT SENSOR POWER SUPPLY CIRCUIT

1. Disconnect battery current sensor (1) harness connector.
2. Turn ignition switch ON.
   ⇦: Vehicle front

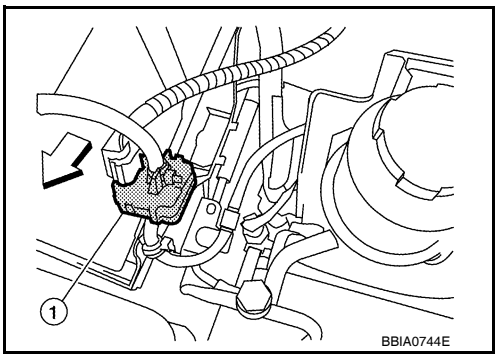

3. Check voltage between battery current sensor terminal 1 and ground with CONSULT-III or tester.

Voltage: Approximately 5V

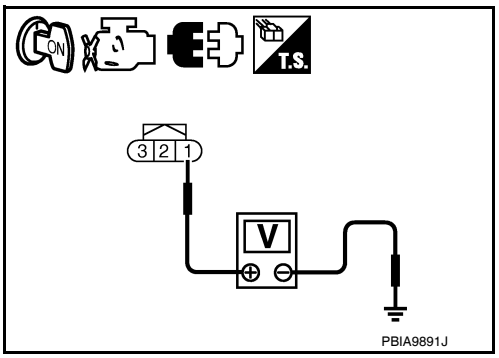

OK or NG

OK >> GO TO 4.
NG >> GO TO 3.

3. DETECT MALFUNCTIONING PART

Check the following.
- Harness connectors E5, F14
- Harness for open or short between battery current sensor and ECM

>> Repair open circuit or short to ground or short to power in harness or connectors.

4. CHECK BATTERY CURRENT SENSOR GROUND CIRCUIT FOR OPEN AND SHORT

1. Turn ignition switch OFF.
2. Disconnect ECM harness connector.
3. Check harness continuity between battery current sensor terminal 2 and ECM terminal 67.
   Refer to Wiring Diagram.

Continuity should exist.

4. Also check harness for short to ground and short to power.

OK or NG

OK >> GO TO 6.
NG >> GO TO 5.

5. DETECT MALFUNCTIONING PART

Check the following.
- Harness connectors E5, F14
- Harness for open or short between battery current sensor and ECM

>> Repair open circuit or short to ground or short to power in harness or connectors.

6. CHECK BATTERY CURRENT SENSOR INPUT SIGNAL CIRCUIT FOR OPEN AND SHORT

1. Check harness continuity between battery current sensor terminal 3 and ECM terminal 71. Refer to Wiring Diagram.

Continuity should exist.

2. Also check harness for short to ground and short to power.

OK or NG

OK >> GO TO 8.
NG >> GO TO 7.

7. DETECT MALFUNCTIONING PART

Check the following.
- Harness connectors E2, F32
- Harness for open or short between battery current sensor and ECM

>> Repair open circuit or short to ground or short to power in harness or connectors.

8. CHECK BATTERY CURRENT SENSOR

Refer to EC-326, "Component Inspection".

OK or NG

OK >> GO TO 9.
NG >> Replace battery negative cable assembly.

9. CHECK INTERMITTENT INCIDENT

Refer to GI-35, "How to Check Terminal" and GI-38, "Intermittent Incident".

>> **INSPECTION END**

Component Inspection

INFOID:0000000001351910

BATTERY CURRENT SENSOR

1. Reconnect harness connectors disconnected.
2. Disconnect battery negative cable (1).
3. Install jumper cable (A) between battery negative terminal and body ground.
4. Turn ignition switch ON.

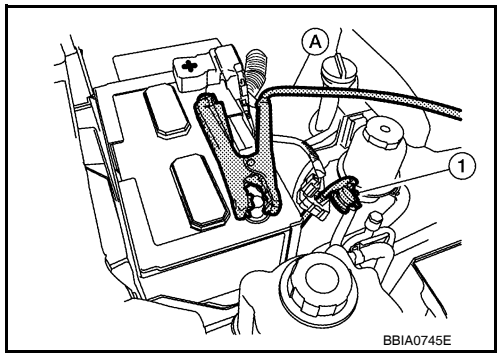

5. Check voltage between ECM terminal 71 (battery current sensor signal) and ground.

Voltage: Approximately 2.5V

6. If NG, replace battery negative cable assembly.

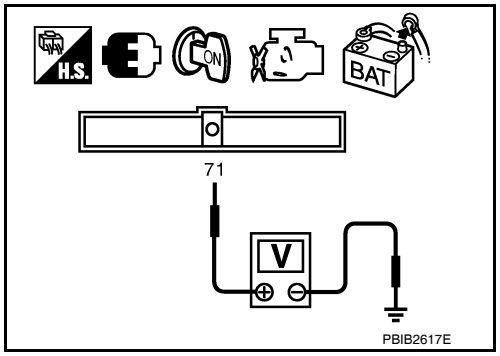

P1554 BATTERY CURRENT SENSOR

Component Description

INFOID:0000000001528777

The power generation voltage variable control enables fuel consumption to be decreased by reducing the engine load which is caused by the power generation of the generator. The battery current sensor (1) is installed to the battery cable at the negative terminal. The sensor measures the charging/discharging current of the battery. Based on the sensor signal, ECM judges whether or not the power generation voltage variable control is performed. When performing the power generation voltage variable control, ECM calculates the target power generation voltage based on the sensor signal. And ECM sends the calculated value as the power generation command value to IPDM E/R. For the details of the power generation voltage variable control, refer to CHG-9, "System Description".

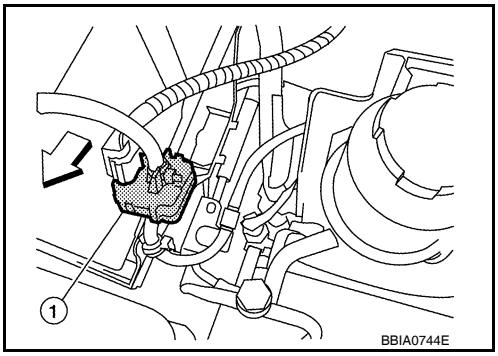

⇦: Vehicle front

CAUTION:

Do not connect the electrical component or the ground wire directly to the battery terminal. The connection causes the malfunction of the power generation voltage variable control, and then the battery discharge may occur.

On Board Diagnosis Logic

INFOID:0000000001528779

The MIL will not light up for this self-diagnosis.

NOTE:

If DTC P1554 is displayed with DTC P0643, first perform the trouble diagnosis for DTC P0643. Refer to EC-293, "On Board Diagnosis Logic".

DTC No.	Trouble diagnosis name	DTC detecting condition	Possible cause
P1554 1554	Battery current sensor performance	The output voltage of the battery current sensor is lower than the specified value while the battery voltage is high enough.	• Harness or connectors (The sensor circuit is open or shorted.) • Battery current sensor

Overall Function Check

INFOID:0000000001528780

Use this procedure to check the overall function of the battery current sensor circuit. During this check, a 1st trip DTC might not be confirmed.

TESTING CONDITION:

- **Before performing the following procedure, confirm that battery voltage is more than 12.8V at idle.**
- **Before performing the following procedure, confirm that all load switches and A/C switch are turned OFF.**

WITH CONSULT-III

1. Start engine and let it idle.
2. Select “BAT CUR SEN” in “DATA MONITOR” mode with CONSULT-III.
3. Check “BAT CUR SEN” indication for 10 seconds.
   “BAT CUR SEN” should be above 2,300mV at least once.
4. If NG, go to EC-329, "Diagnosis Procedure".

WITH GST

1. Start engine and let it idle.

2. Check voltage between ECM terminal 71 (battery current sensor signal) and ground for 10 seconds.
The voltage should be above 2.3V at least once.
3. If NG, go to EC-329, "Diagnosis Procedure".

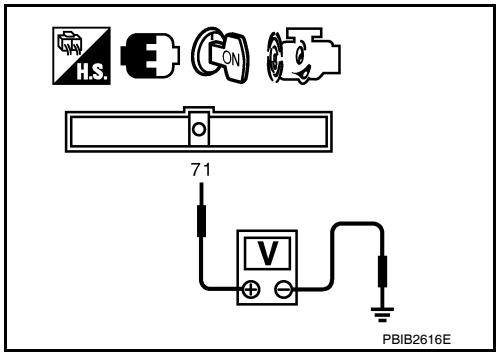

Diagnosis Procedure

INFOID:0000000001528782

1. CHECK GROUND CONNECTIONS

1. Turn ignition switch OFF.
2. Loosen and retighten ground screws on the body.
Refer to EC-86, "Ground Inspection".

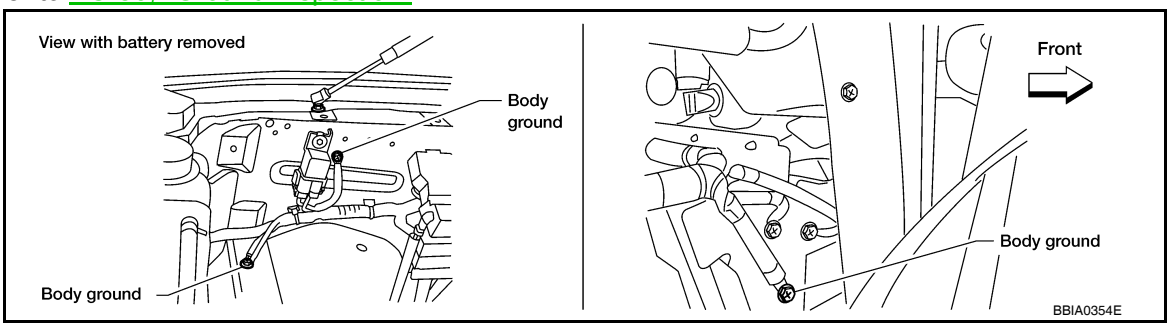

OK or NG

OK >> GO TO 2.
NG >> Repair or replace ground connections.

2. CHECK BATTERY CURRENT SENSOR POWER SUPPLY CIRCUIT

1. Disconnect battery current sensor (1) harness connector.
2. Turn ignition switch ON.
⇦: Vehicle front

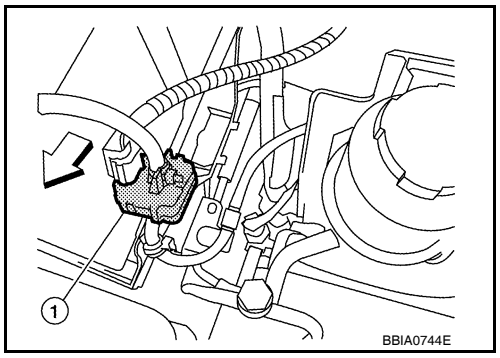

3. Check voltage between battery current sensor terminal 1 and ground with CONSULT-III or tester.

Voltage: Approximately 5V

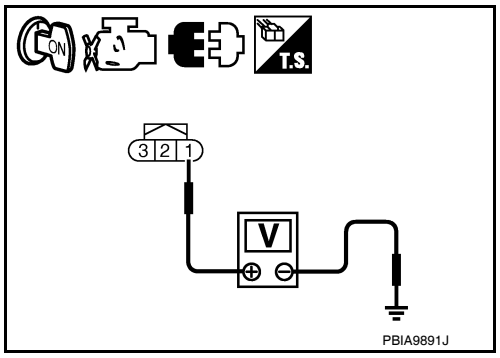

OK or NG

OK >> GO TO 4.
NG >> GO TO 3.

3. DETECT MALFUNCTIONING PART

Check the following.
- Harness connectors E5, F14
- Harness for open or short between battery current sensor and ECM

>> Repair open circuit or short to ground or short to power in harness or connectors.

4. CHECK BATTERY CURRENT SENSOR GROUND CIRCUIT FOR OPEN AND SHORT

1. Turn ignition switch OFF.
2. Disconnect ECM harness connector.
3. Check harness continuity between battery current sensor terminal 2 and ECM terminal 67. Refer to Wiring Diagram.

Continuity should exist.

4. Also check harness for short to ground and short to power.

OK or NG

OK >> GO TO 6.
NG >> GO TO 5.

5. DETECT MALFUNCTIONING PART

Check the following.
- Harness connectors E5, F14
- Harness for open or short between battery current sensor and ECM

>> Repair open circuit or short to ground or short to power in harness or connectors.

6. CHECK BATTERY CURRENT SENSOR INPUT SIGNAL CIRCUIT FOR OPEN AND SHORT

1. Check harness continuity between battery current sensor terminal 3 and ECM terminal 71. Refer to Wiring Diagram.

Continuity should exist.

2. Also check harness for short to ground and short to power.

OK or NG

OK >> GO TO 8.
NG >> GO TO 7.

7. DETECT MALFUNCTIONING PART

Check the following.
- Harness connectors E2, F32
- Harness for open or short between battery current sensor and ECM

>> Repair open circuit or short to ground or short to power in harness or connectors.

8. CHECK BATTERY CURRENT SENSOR

Refer toEC-330, "Component Inspection".

OK or NG

OK >> GO TO 9.
NG >> Replace battery negative cable assembly.

9. CHECK INTERMITTENT INCIDENT

Refer to GI-35, "How to Check Terminal" and GI-38, "Intermittent Incident".

>> **INSPECTION END**

Component Inspection

INFOID:0000000001528783

BATTERY CURRENT SENSOR

1. Reconnect harness connectors disconnected.
2. Disconnect battery negative cable (1).
3. Install jumper cable (A) between battery negative terminal and body ground.
4. Turn ignition switch ON.

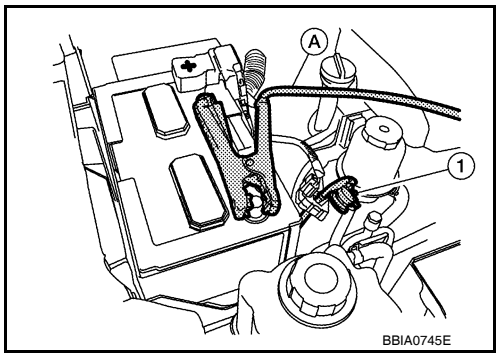

5. Check voltage between ECM terminal 71 (battery current sensor signal) and ground.

Voltage: Approximately 2.5V

6. If NG, replace battery negative cable assembly.

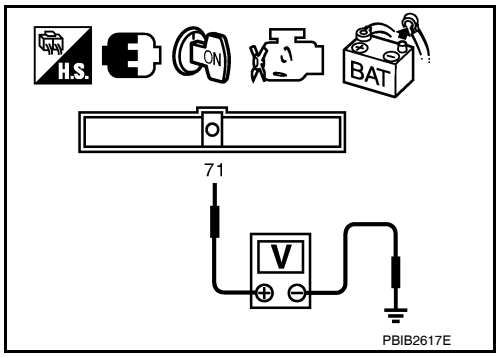

P1564 ICC STEERING SWITCH

Component Description

INFOID:0000000001365749

ICC steering switch has variant values of electrical resistance for each button. ECM reads voltage variation of switch, and determines which button is operated.

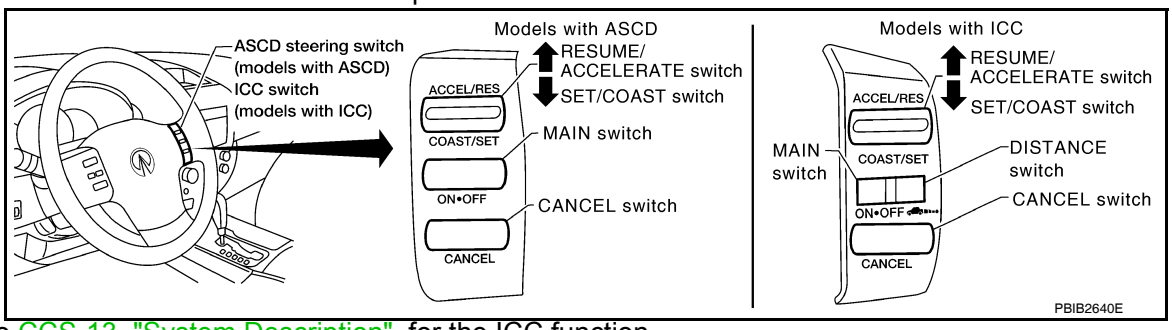

Refer to CCS-13, "System Description" for the ICC function.

On Board Diagnosis Logic

INFOID:0000000001365751

This self-diagnosis has the one trip detection logic.
The MIL will not light up for this self-diagnosis.
NOTE:
If DTC P1564 is displayed with DTC P0605, first perform the trouble diagnosis for DTC P0605. Refer to EC-291, "On Board Diagnosis Logic".

DTC No.	Trouble diagnosis name	DTC detecting condition	Possible cause
P1564 1564	ICC steering switch	• An excessively high voltage signal from the ICC steering switch is sent to ECM. • ECM detects that input signal from the ICC steering switch is out of the specified range. • ECM detects that the ICC steering switch is stuck ON.	• Harness or connectors (The switch circuit is open or shorted.) • ICC steering switch • Combination switch (spiral cable) • ECM

DTC Confirmation Procedure

INFOID:0000000001365752

NOTE:
If DTC Confirmation Procedure has been previously conducted, always turn ignition switch OFF and wait at least 10 seconds before conducting the next test.

WITH CONSULT-III

1. Turn ignition switch ON.
2. Wait at least 10 seconds.
3. Press MAIN switch for at least 10 seconds, then release it and wait at least 10 seconds.
4. Press CANCEL switch for at least 10 seconds, then release it and wait at least 10 seconds.
5. Press RESUME/ACCELERATE switch for at least 10 seconds, then release it and wait at least 10 seconds.
6. Press SET/COAST switch for at least 10 seconds, then release it and wait at least 10 seconds.
7. Press DISTANCE switch for at least 10 seconds, then release it and wait at least 10 seconds.
8. Check DTC.
9. If DTC is detected, go to EC-332, "Diagnosis Procedure".

WITH GST

Follow the procedure “WITH CONSULT-III” above.

Diagnosis Procedure

INFOID:0000000001365754

1.CHECK GROUND CONNECTIONS

1. Turn ignition switch OFF.
2. Loosen and retighten three ground screws on the body.
   Refer to EC-86, "Ground Inspection".

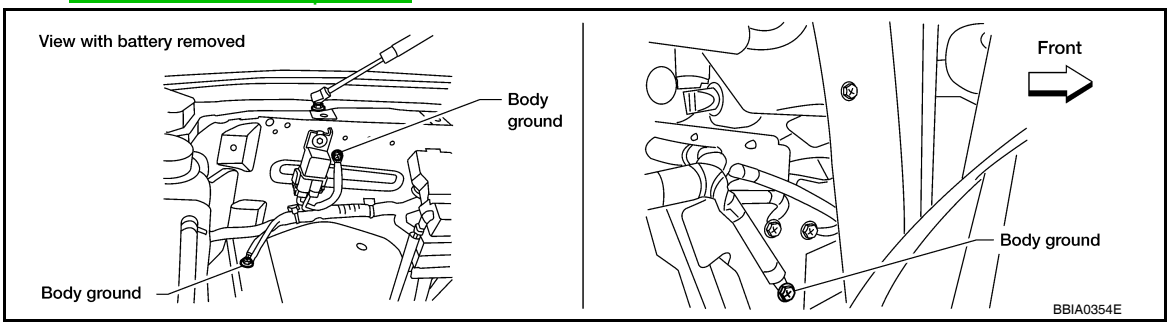

OK or NG

OK >> GO TO 2.
NG >> Repair or replace ground connections.

2. CHECK ICC STEERING SWITCH CIRCUIT

With CONSULT-III

1. Turn ignition switch ON.
2. Select “MAIN SW”, “CANCEL SW”, “RESUME/ACC SW”, “SET SW” and “DIST SW” in “DATA MONITOR” mode with CONSULT-III.
3. Check each item indication under the following conditions.

Switch	Monitor item	Condition	Indication
MAIN switch	MAIN SW	Pressed	ON
		Released	OFF
CANCEL switch	CANCEL SW	Pressed	ON
		Released	OFF
RESUME/ACCELERATE switch	RESUME/ACC SW	Pressed	ON
		Released	OFF
SET/COAST switch	SET SW	Pressed	ON
		Released	OFF
DISTANCE switch	DIST SW	Pressed	ON
		Released	OFF

Without CONSULT-III

1. Turn ignition switch ON.
2. Check voltage between ECM terminal 99 and ground with pressing each button.

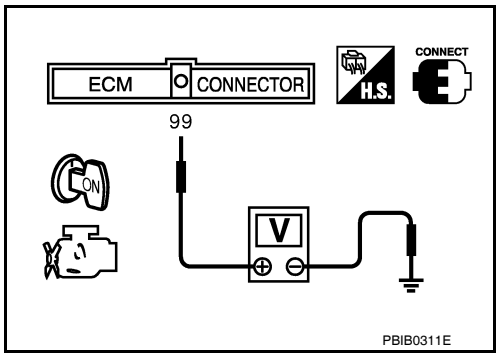

Switch	Condition	Voltage [V]
MAIN switch	Pressed	Approx. 0
	Released	Approx. 4.3
CANCEL switch	Pressed	Approx. 1.3
	Released	Approx. 4.3
RESUME/ACCELERATE switch	Pressed	Approx. 3.7
	Released	Approx. 4.3
SET/COAST switch	Pressed	Approx. 3.0
	Released	Approx. 4.3
DISTANCE switch	Pressed	Approx. 2.2
	Released	Approx. 4.3

OK or NG

OK >> GO TO 8.
NG >> GO TO 3.

3. CHECK ICC STEERING SWITCH GROUND CIRCUIT FOR OPEN AND SHORT

1. Turn ignition switch OFF.
2. Disconnect ECM harness connector.
3. Disconnect combination switch harness connector.
4. Check harness continuity between combination switch terminal 15 and ECM terminal 67.
   Refer to Wiring Diagram.

Continuity should exist.

5. Also check harness for short to ground and short to power.

OK or NG

OK >> GO TO 5.
NG >> GO TO 4.

4. DETECT MALFUNCTIONING PART

Check the following.
- Harness connectors M31, E152
- Harness connectors E5, F14
- Combination switch (spiral cable)
- Harness for open and short between ECM and combination switch

>> Repair open circuit or short to ground or short to power in harness or connectors.

5. CHECK ICC STEERING SWITCH INPUT SIGNAL CIRCUIT FOR OPEN AND SHORT

1. Check harness continuity between ECM terminal 99 and combination switch terminal 14.
   Refer to Wiring Diagram.

Continuity should exist.

2. Also check harness for short to ground and short to power.

OK or NG

OK >> GO TO 7.
NG >> GO TO 6.

6. DETECT MALFUNCTIONING PART

Check the following.
- Harness connectors M31, E152
- Combination switch (spiral cable)
- Harness for open and short between ECM and combination switch

>> Repair open circuit or short to ground or short to power in harness or connectors.

7. CHECK ICC STEERING SWITCH

Refer to EC-335, "Component Inspection".

OK or NG

OK >> GO TO 8.
NG >> Replace ICC steering switch.

8. CHECK INTERMITTENT INCIDENT

Refer to GI-35, "How to Check Terminal" and GI-38, "Intermittent Incident".

>> **INSPECTION END**

Component Inspection

INFOID:0000000001365755

ICC STEERING SWITCH

1. Disconnect combination switch (spiral cable) harness connector M102.
2. Check continuity between combination switch terminals 1 and 2 with pushing each switch.

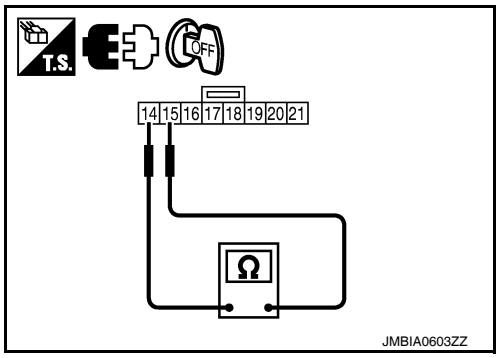

Switch	Condition	Resistance [Ω]
MAIN switch	Pressed	Approx. 0
	Released	Approx. 5,500
CANCEL switch	Pressed	Approx. 310
	Released	Approx. 5,500
RESUME/ACCELERATE switch	Pressed	Approx. 2,600
	Released	Approx. 5,500
SET/COAST switch	Pressed	Approx. 1,400
	Released	Approx. 5,500
DISTANCE switch	Pressed	Approx. 740
	Released	Approx. 5,500

If NG, replace ICC steering switch.

P1564 ASCD STEERING SWITCH

Component Description

INFOID:0000000001365456

ASCD steering switch has variant values of electrical resistance for each button. ECM reads voltage variation of switch, and determines which button is operated.

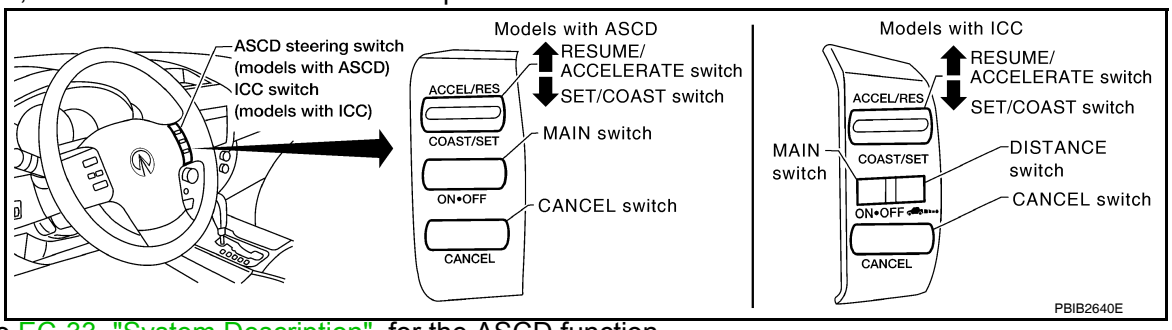

Refer to EC-33, "System Description" for the ASCD function.

On Board Diagnosis Logic

INFOID:0000000001365458

- **This self-diagnosis has the one trip detection logic.**
- **The MIL will not light up for this self-diagnosis.**

NOTE:
If DTC P1564 is displayed with DTC P0605, first perform the trouble diagnosis for DTC P0605. Refer to EC-291, "On Board Diagnosis Logic".

DTC No.	Trouble Diagnosis Name	DTC Detecting Condition	Possible Cause
P1564 1564	ASCD steering switch	• An excessively high voltage signal from the ASCD steering switch is sent to ECM. • ECM detects that input signal from the ASCD steering switch is out of the specified range. • ECM detects that the ASCD steering switch is stuck ON.	• Harness or connectors (The switch circuit is open or shorted.) • ASCD steering switch • Combination meter (spiral cable) • ECM

DTC Confirmation Procedure

INFOID:0000000001365459

NOTE:
If DTC Confirmation Procedure has been previously conducted, always turn ignition switch OFF and wait at least 10 seconds before conducting the next test.

WITH CONSULT-III

1. Turn ignition switch ON.
2. Wait at least 10 seconds.
3. Press MAIN switch for at least 10 seconds, then release it and wait at least 10 seconds.
4. Press CANCEL switch for at least 10 seconds, then release it and wait at least 10 seconds.
5. Press RESUME/ACCELERATE switch for at least 10 seconds, then release it and wait at least 10 seconds.
6. Press SET/COAST switch for at least 10 seconds, then release it and wait at least 10 seconds.
7. Check DTC.
8. If DTC is detected, go to EC-336, "Diagnosis Procedure".

WITH GST

Follow the procedure “WITH CONSULT-III” above.

Diagnosis Procedure

INFOID:0000000001365461

1. CHECK GROUND CONNECTIONS

1. Turn ignition switch OFF.
2. Loosen and retighten three ground screws on the body.

Refer to EC-86, "Ground Inspection".

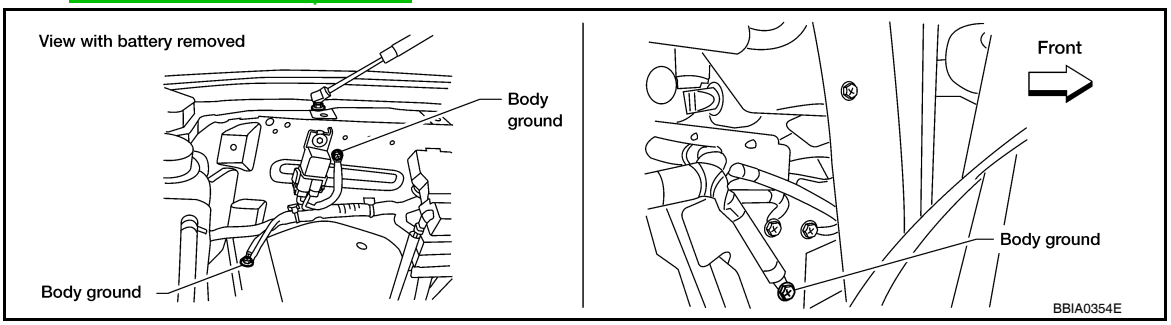

OK or NG

OK >> GO TO 2.
NG >> Repair or replace ground connections.

2. CHECK ASCD STEERING SWITCH CIRCUIT

With CONSULT-III

1. Turn ignition switch ON.
2. Select “MAIN SW”, “CANCEL SW”, RESUME/ACC SW” and “SET SW” in “DATA MONITOR” mode with CONSULT-III.
3. Check each item indication under the following conditions.

Switch	Monitor item	Condition	Indication
MAIN switch	MAIN SW	Pressed	ON
		Released	OFF
CANCEL switch	CANCEL SW	Pressed	ON
		Released	OFF
RESUME/ACCELERATE switch	RESUME/ACC SW	Pressed	ON
		Released	OFF
SET/COAST switch	SET SW	Pressed	ON
		Released	OFF

Without CONSULT-III

1. Turn ignition switch ON.
2. Check voltage between ECM terminal 99 and ground with pressing each button.

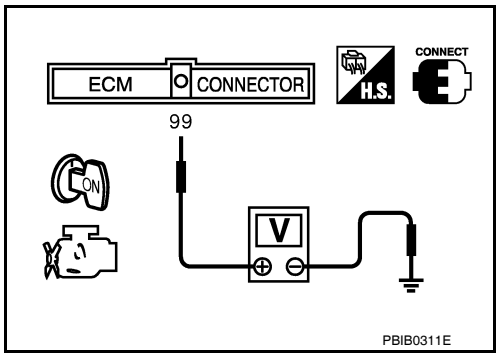

Switch	Condition	Voltage [V]
MAIN switch	Pressed	Approx. 0
	Released	Approx. 4
CANCEL switch	Pressed	Approx. 1
	Released	Approx. 4
RESUME/ACCELERATE switch	Pressed	Approx. 3
	Released	Approx. 4
SET/COAST switch	Pressed	Approx. 2
	Released	Approx. 4

OK or NG

OK >> GO TO 8.
NG >> GO TO 3.

3. CHECK ASCD STEERING SWITCH GROUND CIRCUIT FOR OPEN AND SHORT

1. Turn ignition switch OFF.

2. Disconnect combination switch harness connector M102.
3. Disconnect ECM harness connector.
4. Check harness continuity between combination switch terminal 15 and ECM terminal 67.
   Refer to Wiring Diagram.

   Continuity should exist.

5. Also check harness for short to ground and short to power.

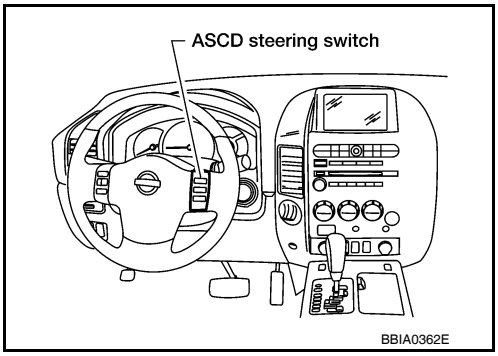

OK or NG

OK >> GO TO 5.
NG >> GO TO 4.

4. DETECT MALFUNCTIONING PART

Check the following.
- Harness connectors M31, E152
- Harness connectors E5, F14
- Combination switch (spiral cable)
- Harness for open and short between ECM and combination switch

>> Repair open circuit or short to ground or short to power in harness or connectors.

5. CHECK ASCD STEERING SWITCH INPUT SIGNAL CIRCUIT FOR OPEN AND SHORT

1. Check harness continuity between ECM terminal 99 and combination switch terminal 14.
   Refer to Wiring Diagram.

   Continuity should exist.

2. Also check harness for short to ground and short to power.

OK or NG

OK >> GO TO 7.
NG >> GO TO 6.

6. DETECT MALFUNCTIONING PART

Check the following.
- Harness connectors M31, E152
- Combination switch (spiral cable)
- Harness for open and short between ECM and combination switch

>> Repair open circuit or short to ground or short to power in harness or connectors.

7. CHECK ASCD STEERING SWITCH

Refer to EC-338, "Component Inspection".

OK or NG

OK >> GO TO 8.
NG >> Replace ASCD steering switch.

8. CHECK INTERMITTENT INCIDENT

Refer to GI-35, "How to Check Terminal" and GI-38, "Intermittent Incident".

>> **INSPECTION END**

Component Inspection

INFOID:0000000001365462

ASCD STEERING SWITCH

1. Disconnect combination switch (spiral cable) harness connector M102.

2. Check continuity between combination switch (spiral cable) terminals 14 and 15 with pushing each switch.

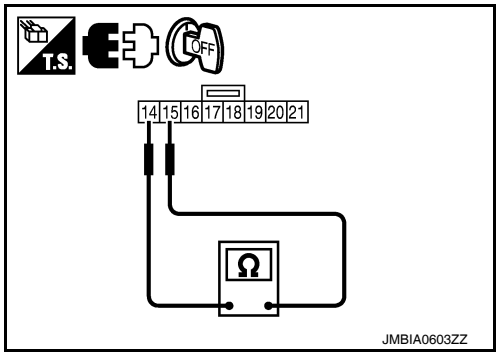

Switch	Condition	Resistance [Ω]
MAIN switch	Pressed	Approx. 0
	Released	Approx. 4,000
CANCEL switch	Pressed	Approx. 250
	Released	Approx. 4,000
RESUME/ACCELERATE switch	Pressed	Approx. 1,480
	Released	Approx. 4,000
SET/COAST switch	Pressed	Approx. 660
	Released	Approx. 4,000

P1568 ICC FUNCTION

On Board Diagnosis Logic

INFOID:0000000001365756

- **This self-diagnosis has the one trip detection logic.**
- **The MIL will not light up for this self-diagnosis.**

NOTE:

- **If DTC P1568 is displayed with DTC U1000, U1001, first perform the trouble diagnosis for DTC U1000, U1001. Refer to EC-87, "On Board Diagnosis Logic".**
- **If DTC P1568 is displayed with DTC U1010, first perform the trouble diagnosis for DTC U1010. Refer to EC-88, "On Board Diagnosis Logic".**
- **If DTC P1568 is displayed with DTC P0605, first perform the trouble diagnosis for DTC P0605. Refer to EC-291, "On Board Diagnosis Logic".**

DTC No.	Trouble Diagnosis Name	DTC Detecting Condition	Possible Cause
P1568 1568	ICC function	ECM detects a difference between signals from ICC unit is out of specified range.	• Harness or connectors (The CAN communication line is open or shorted.) • ICC unit • ECM

DTC Confirmation Procedure

INFOID:0000000001365757

CAUTION:

Always drive vehicle at a safe speed.

NOTE:

If DTC Confirmation Procedure has been previously conducted, always turn ignition switch OFF and wait at least 10 seconds before conducting the next test.

TESTING CONDITION:

Step 4 may be conducted with the drive wheels lifted in the shop or by driving the vehicle. If a road test is expected to be easier, it is unnecessary to lift the vehicle.

WITH CONSULT-III

1. Turn ignition switch ON.
2. Press MAIN switch on ICC steering switch.
3. Drive the vehicle at more than 40 km/h (25 MPH).
4. Press SET/COAST switch.
5. Check DTC.
6. If DTC is detected, go to EC-340, "Diagnosis Procedure".

WITH GST

Follow the procedure “WITH CONSULT-III” above.

Diagnosis Procedure

INFOID:0000000001365758

1. REPLACE ICC UNIT

1. Replace ICC unit.
2. Perform CCS-8.
3. Check DTC of ICC unit. Refer to CCS-18.

>> **INSPECTION END**

P1572 ICC BRAKE SWITCH

Component Description

INFOID:0000000001365766

When the brake pedal is depressed, ICC brake switch is turned OFF and stop lamp switch is turned ON. ECM detects the state of the brake pedal by this input of two kinds (ON/OFF signal).
Refer to CCS-13 for the ICC function.

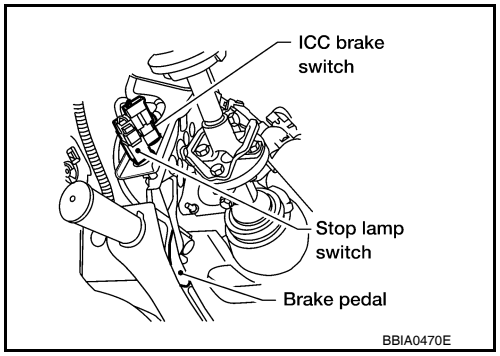

On Board Diagnosis Logic

INFOID:0000000001365768

- **This diagnosis has the one trip detection logic.**
- **The MIL will not light up for this self-diagnosis.**

NOTE:
- **If DTC P1572 is displayed with DTC P0605, first perform the trouble diagnosis for DTC P0605. Refer to EC-291, "On Board Diagnosis Logic".**
- **This self-diagnosis has the one trip detection logic. When malfunction A is detected, DTC is not stored in ECM memory. And in that case, 1st trip DTC and 1st trip freeze frame data are displayed. 1st trip DTC is erased when ignition switch OFF. And even when malfunction A is detected in two consecutive trips, DTC is not stored in ECM memory.**

DTC No.	Trouble diagnosis name	DTC detecting condition		Possible cause
P1572 1572	ICC brake switch	A)	When vehicle speed is above 30 km/h (19 MPH), ON signals from the stop lamp switch and the ICC brake switch are sent to ECM at the same time.	• Harness or connectors (The stop lamp switch circuit is shorted.) • Harness or connectors (The ICC brake switch circuit is shorted.) • Stop lamp switch • ICC brake switch • ICC brake hold relay • Incorrect stop lamp switch installation • Incorrect ICC brake switch installation • ECM
		B)	ICC brake switch signal is not sent to ECM for extremely long time while the vehicle is driving	

DTC Confirmation Procedure

INFOID:0000000001365769

CAUTION:
Always drive vehicle at a safe speed.

NOTE:
- If DTC Confirmation Procedure has been previously conducted, always turn ignition switch OFF and wait at least 10 seconds before conducting the next test.
- Procedure for malfunction B is not described here. It takes extremely long time to complete procedure for malfunction B. By performing procedure for malfunction A, the incident that causes malfunction B can be detected.

TESTING CONDITION:
Steps 4 and 5 may be conducted with the drive wheels lifted in the shop or by driving the vehicle. If a road test is expected to be easier, it is unnecessary to lift the vehicle.

WITH CONSULT-III

1. Start engine (VDC switch OFF).
2. Select “DATA MONITOR” mode with CONSULT-III.
3. Press MAIN switch and make sure that CRUISE lamp lights up.
4. Drive the vehicle for at least 5 consecutive seconds under the following conditions.

VHCL SPEED SE	More than 30 km/h (19 MPH)
Selector lever	Suitable position

5. Check 1st trip DTC.
6. If 1st trip DTC is detected, go to EC-342, "Diagnosis Procedure".
   If 1st trip DTC is not detected, go to the following step.
7. Drive the vehicle for at least 5 consecutive seconds under the following conditions.

VHCL SPEED SE	More than 30 km/h (19 MPH)
Selector lever	Suitable position
Driving location	Depress the brake pedal for more than five seconds so as not to come off from the above-mentioned vehicle speed.

8. Check 1st trip DTC.
9. If 1st trip DTC is detected, go to EC-342, "Diagnosis Procedure".

WITH GST

Follow the procedure “WITH CONSULT-III” above.

Diagnosis Procedure

INFOID:0000000001365771

1. CHECK OVERALL FUNCTION-I

With CONSULT-III

1. Turn ignition switch ON.
2. Select “BRAKE SW1” in “DATA MONITOR” mode with CONSULT-III.
3. Check “BRAKE SW1” indication under the following conditions.

CONDITION	INDICATION
Brake pedal: Slightly depressed	OFF
Brake pedal: Fully released	ON

Without CONSULT-III

1. Turn ignition switch ON.
2. Check voltage between ECM terminal 108 and ground under the following conditions.

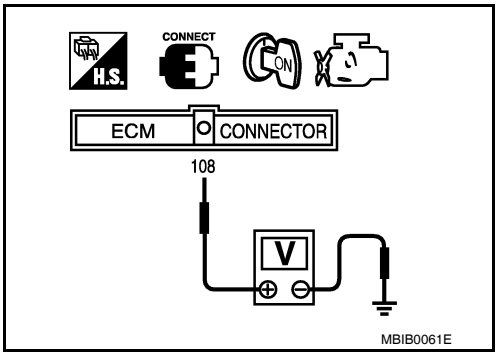

CONDITION	VOLTAGE
Brake pedal: Slightly depressed	Approximately 0V
Brake pedal: Fully released	Battery voltage

OK or NG

OK >> GO TO 2.
NG >> GO TO 3.

2. CHECK OVERALL FUNCTION-II

With CONSULT-III

Check “BRAKE SW2” indication in “DATA MONITOR” mode.

CONDITION	INDICATION
Brake pedal: Fully released	OFF
Brake pedal: Slightly depressed	ON

Without CONSULT-III

Check voltage between ECM terminal 101 and ground under the following conditions.

CONDITION	VOLTAGE
Brake pedal: Fully released	Approximately 0V
Brake pedal: Slightly depressed	Battery voltage

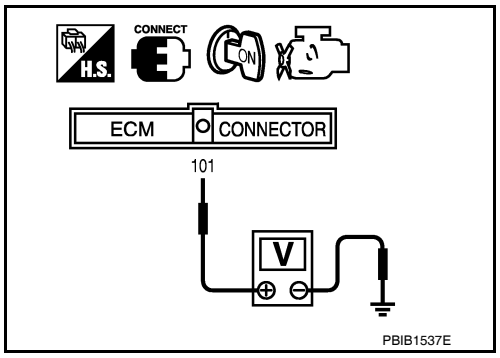

OK or NG

OK >> GO TO 14.
NG >> GO TO 7.

3. CHECK ICC BRAKE SWITCH POWER SUPPLY CIRCUIT

1. Turn ignition switch OFF.
2. Disconnect ICC brake switch harness connector.
3. Turn ignition switch ON.
4. Check voltage between ICC brake switch terminal 1 and ground with CONSULT-III or tester.

Voltage: Battery voltage

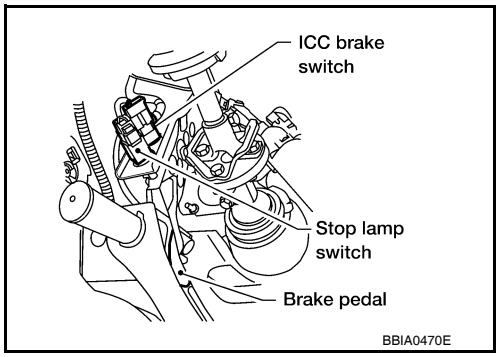

OK or NG

OK >> GO TO 5.
NG >> GO TO 4.

4. DETECT MALFUNCTIONING PART

Check the following.
- Harness connectors M31, E152
- Fuse block (J/B) connector M4
- 10A fuse
- Harness for open or short between ICC brake switch and fuse

>> Repair open circuit or short to ground or short to power in harness or connectors.

5. CHECK ICC BRAKE SWITCH INPUT SIGNAL CIRCUIT FOR OPEN AND SHORT

1. Turn ignition switch OFF.
2. Disconnect ECM harness connector.
3. Check harness continuity between ICC brake switch terminal 2 and ECM terminal 108. Refer Wiring Diagram.

Continuity should exist.

4. Also check harness for short to ground and short to power.

OK or NG

OK >> GO TO 6.
NG >> Repair open circuit or short to ground or short to power in harness or connectors.

6. CHECK ICC BRAKE SWITCH

Refer to EC-346, "Component Inspection".

OK or NG

OK >> GO TO 14.
NG >> Replace ICC brake switch.

7. CHECK DTC WITH ICC UNIT

Refer to CCS-18.

OK or NG

OK >> GO TO 8.
NG >> Repair or replace.

8. CHECK POWER SUPPLY CIRCUIT

1. Turn ignition switch OFF.
2. Disconnect stop lamp switch harness connector.

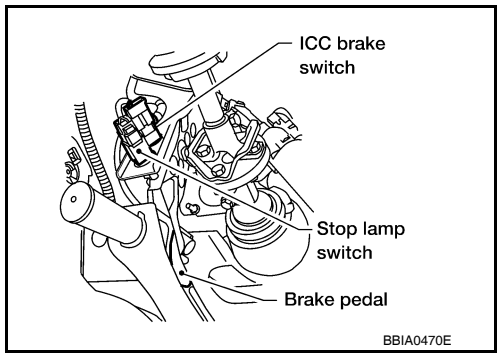

3. Check voltage between stop lamp switch terminal 3 and ground with CONSULT -III or tester.

Voltage: Battery voltage

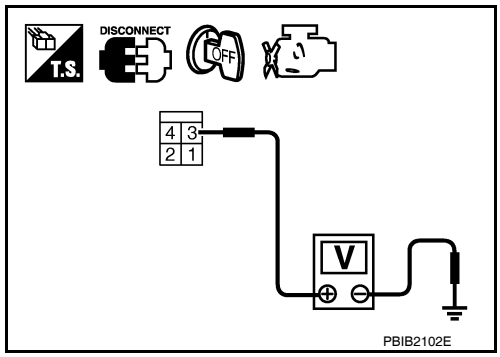

4. Disconnect ICC brake hold relay.

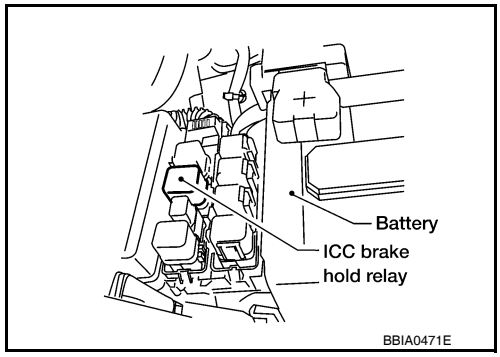

5. Check voltage between ICC brake hold relay terminal 7 and ground with CONSULT-III or tester.

Voltage: Battery voltage

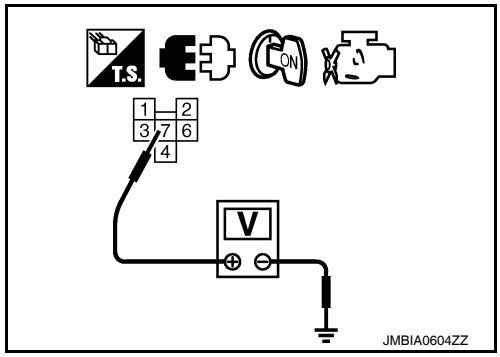

OK or NG

OK >> GO TO 10.
NG >> GO TO 9.

9. DETECT MALFUNCTIONING PART

Check the following.
- Harness connectors M31, E152
- Fuse block (J/B) connector M60
- 10A fuse
- Harness for open or short between stop lamp switch and battery

>> Repair open circuit or short to ground or short to power in harness or connectors.

10. CHECK INPUT SIGNAL CIRCUIT FOR OPEN AND SHORT

1. Turn ignition switch OFF.
2. Disconnect ECM harness connector.
3. Check harness continuity between ECM terminal 101 and stop lamp switch terminal 4.
   Refer to Wiring Diagram.

   Continuity should exist.

4. Also check harness for short to ground and short to power.
5. Check harness continuity between ECM terminal 101 and ICC hold relay terminal 6.
   Refer to Wiring Diagram.

   Continuity should exist.

6. Also check harness for short to ground and short to power.
7. Disconnect ICC unit harness connector.
8. Check harness continuity between ECM terminal 101 and ICC unit terminal 38.
   Refer to Wiring Diagram.

   Continuity should exist.

9. Also check harness for short to ground and short to power.

OK or NG

OK >> GO TO 12.
NG >> GO TO 11.

11. DETECT MALFUNCTIONING PART

Check the following.
- Harness connectors E34, B40
- Harness for open or short between ICC unit and ECM

>> Repair open circuit or short to ground or short to power in harness or connectors.

12. CHECK STOP LAMP SWITCH

Refer to EC-346, "Component Inspection".

OK or NG

OK >> GO TO 13.
NG >> Replace stop lamp switch.

13. CHECK ICC BRAKE HOLD RELAY

Refer to EC-346, "Component Inspection".

OK >> GO TO 14.
NG >> Replace ICC brake hold relay.

14. CHECK INTERMITTENT INCIDENT

Refer to GI-35, "How to Check Terminal" and GI-38, "Intermittent Incident".

>> **INSPECTION END**

Component Inspection

INFOID:0000000001365772

ICC BRAKE SWITCH

1. Turn ignition switch OFF.
2. Disconnect ICC brake switch harness connector.
3. Check continuity between ICC brake switch terminals 1 and 2 under the following conditions.

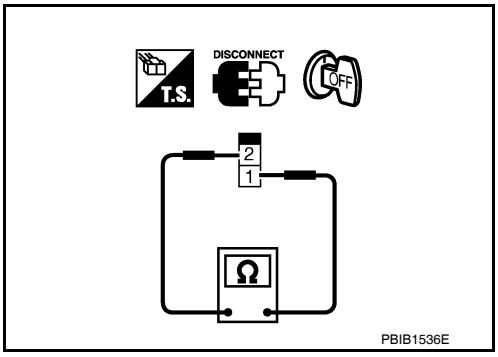

Condition	Continuity
Brake pedal: Fully released.	Should exist.
Brake pedal: Slightly depressed.	Should not exist.

If NG, adjust ICC brake switch installation, refer to BR-15, "Inspection and Adjustment", and perform step 3 again.

STOP LAMP SWITCH

1. Turn ignition switch OFF.
2. Disconnect stop lamp switch harness connector.
3. Check continuity between stop lamp switch terminals 3 and 4 under the following conditions.

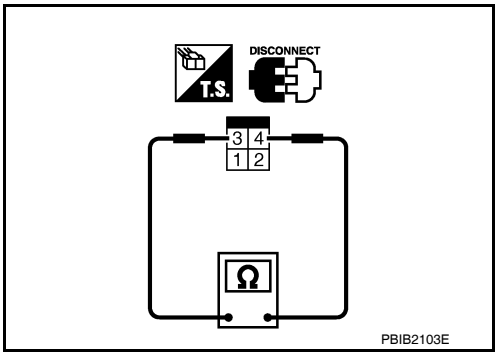

Condition	Continuity
Brake pedal: Fully released.	Should not exist.
Brake pedal: Slightly depressed.	Should exist.

If NG, adjust stop lamp switch installation, refer to BR-15, "Inspection and Adjustment", and perform step 3 again.

ICC BRAKE HOLD RELAY

1. Apply 12V direct current between ICC brake hold relay terminals 1 and 2.
2. Check continuity between relay terminals 3 and 4, 6 and 7 under the following conditions.

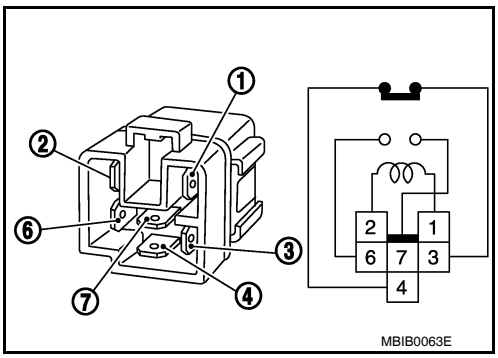

Condition	Between terminals	Continuity
12V direct current supply between terminals 1 and 2	3 and 4	Should not exist
	6 and 7	Should exist
No current supply	3 and 4	Should exist
	6 and 7	Should not exist

3. If NG, replace ICC brake hold relay.

P1572 ASCD BRAKE SWITCH

Component Description

INFOID:0000000001528784

When the brake pedal is depressed, ASCD brake switch is turned OFF and stop lamp switch is turned ON. ECM detects the state of the brake pedal by this input of two kinds (ON/OFF signal).
Refer to EC-33, "System Description" for the ASCD function.

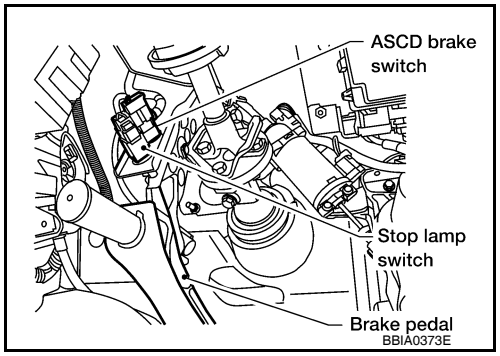

On Board Diagnosis Logic

INFOID:0000000001528786

- **This self-diagnosis has the one trip detection logic.**
- **The MIL will not light up for this self-diagnosis.**

NOTE:
- **If DTC P 1572 is displayed with DTC P0605, first perform the trouble diagnosis for DTC P0605. Refer to EC-291, "On Board Diagnosis Logic".**
- **This self-diagnosis has the one trip detection logic. When malfunction A is detected, DTC is not stored in ECM memory. And in that case, 1st trip DTC and 1st trip freeze frame data are displayed. 1st trip DTC is erased when ignition switch OFF. And even when malfunction A is detected in two consecutive trips, DTC is not stored in ECM memory.**

DTC No.	Trouble Diagnosis Name	DTC Detecting Condition		Possible Cause
P1572 1572	ASCD brake switch	A)	When the vehicle speed is above 30km/h (19 MPH), ON signals from the stop lamp switch and the ASCD brake switch are sent to ECM at the same time.	• Harness or connectors (The stop lamp switch circuit is shorted.) • Harness or connectors (The ASCD brake switch circuit is shorted.) • Stop lamp switch • ASCD brake switch • Incorrect stop lamp switch installation • Incorrect ASCD brake switch installation • ECM
		B)	ASCD brake switch signal is not sent to ECM for extremely long time while the vehicle is driving	

DTC Confirmation Procedure

INFOID:0000000001528787

CAUTION:
Always drive vehicle at a safe speed.

NOTE:
- If DTC Confirmation Procedure has been previously conducted, always turn ignition switch OFF and wait at least 10 seconds before conducting the next test.
- Procedure for malfunction B is not described here. It takes extremely long time to complete procedure for malfunction B. By performing procedure for malfunction A, the incident that causes malfunction B can be detected.

TESTING CONDITION:
Steps 4 and 5 may be conducted with the drive wheels lifted in the shop or by driving the vehicle. If a road test is expected to be easier, it is unnecessary to lift the vehicle.

WITH CONSULT-III

1. Start engine (VDC switch OFF).
2. Select “DATA MONITOR” mode with CONSULT-III.
3. Press MAIN switch and make sure that CRUISE indicator lights up.
4. Drive the vehicle for at least 5 consecutive seconds under the following condition.

VHCL SPEED SE	More than 30 km/h (19 MPH)
Selector lever	Suitable position

5. Check 1st trip DTC.
6. If 1st trip DTC is detected, go to EC-348, "Diagnosis Procedure".
   If 1st trip DTC is not detected, go to the following step.
7. Drive the vehicle for at least 5 consecutive seconds under the following condition.

VHCL SPEED SE	More than 30 km/h (19 MPH)
Selector lever	Suitable position
Driving location	Depress the brake pedal for more than five seconds so as not to come off from the above-mentioned condition.

8. Check 1st trip DTC.
9. If 1st trip DTC is detected, go to EC-348, "Diagnosis Procedure".

WITH GST
Follow the procedure “WITH CONSULT-III” above.

Diagnosis Procedure

INFOID:0000000001528789

1. CHECK OVERALL FUNCTION-I

With CONSULT-III
1. Turn ignition switch ON.
2. Select “BRAKE SW1” in “DATA MONITOR” mode with CONSULT-III.
3. Check “BRAKE SW1” indication under the following conditions.

CONDITION	INDICATION
Brake pedal: Slightly depressed	OFF
Brake pedal: Fully released	ON

Without CONSULT-III
1. Turn ignition switch ON.
2. Check voltage between ECM terminal 108 and ground under the following conditions.

CONDITION	VOLTAGE
Brake pedal: Slightly depressed	Approximately 0V
Brake pedal: Fully released	Battery voltage

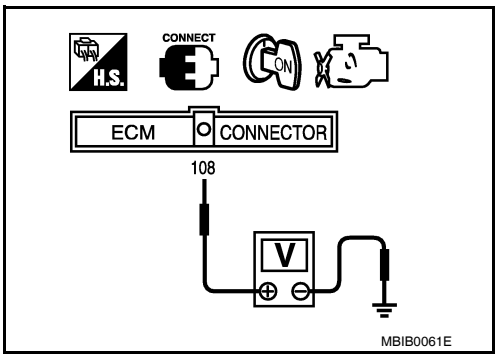

OK or NG
OK >> GO TO 2.
NG >> GO TO 3.

2. CHECK OVERALL FUNCTION-II

With CONSULT-III
Check “BRAKE SW2” indication in “DATA MONITOR” mode.

CONDITION	INDICATION
Brake pedal: Fully released	OFF
Brake pedal: Slightly depressed	ON

Without CONSULT-III

Check voltage between ECM terminal 101 and ground under the following conditions.

CONDITION	VOLTAGE
Brake pedal: Fully released	Approximately 0V
Brake pedal: Slightly depressed	Battery voltage

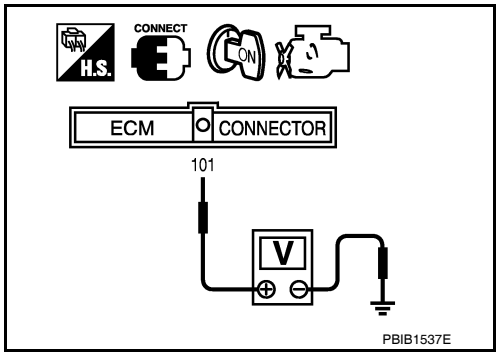

OK or NG

OK >> GO TO 11.
NG >> GO TO 7.

3. CHECK ASCD BRAKE SWITCH POWER SUPPLY CIRCUIT

1. Turn ignition switch OFF.
2. Disconnect ASCD brake switch harness connector.
3. Turn ignition switch ON.

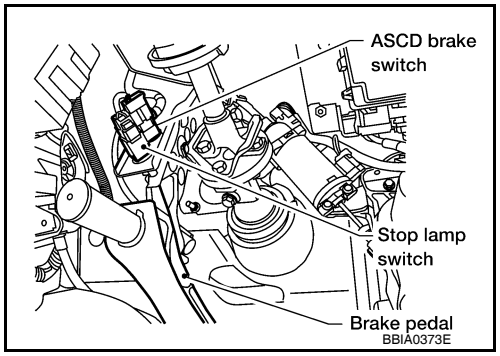

4. Check voltage between ASCD brake switch terminal 1 and ground with CONSULT-III or tester.

Voltage: Battery voltage

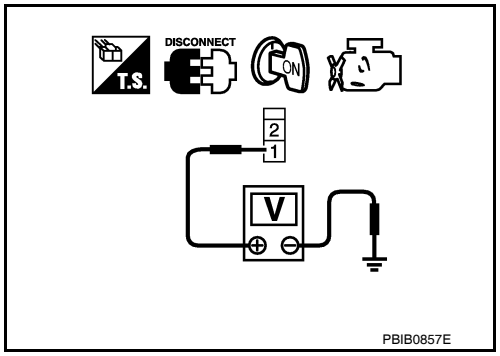

OK or NG

OK >> GO TO 5.
NG >> GO TO 4.

4. DETECT MALFUNCTIONING PART

Check the following.
- Harness connectors M31, E152
- Fuse block (J/B) connector M4
- 10A fuse
- Harness for open or short between ASCD brake switch and fuse

>> Repair open circuit or short to ground or short to power in harness or connectors.

5. CHECK ASCD BRAKE SWITCH INPUT SIGNAL CIRCUIT FOR OPEN AND SHORT

1. Turn ignition switch OFF.
2. Disconnect ECM harness connector.
3. Check harness continuity between ECM terminal 108 and ASCD brake switch terminal 2. Refer to Wiring Diagram.

Continuity should exist.

4. Also check harness for short to ground and short to power.

OK or NG

OK >> GO TO 6.
NG >> Repair open circuit or short to ground or short to power in harness or connectors.

6. CHECK ASCD BRAKE SWITCH

Refer to EC-351, "Component Inspection".

OK or NG

OK >> GO TO 11.
NG >> Replace ASCD brake switch.

7. CHECK STOP LAMP SWITCH POWER SUPPLY CIRCUIT

1. Turn ignition switch OFF.
2. Disconnect stop lamp switch harness connector.

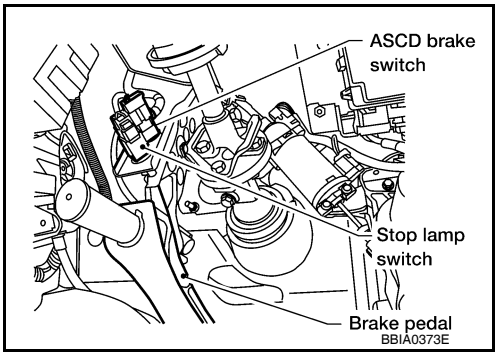

3. Check voltage between stop lamp switch terminal 3 and ground with CONSULT-III or tester.

Voltage: Battery voltage

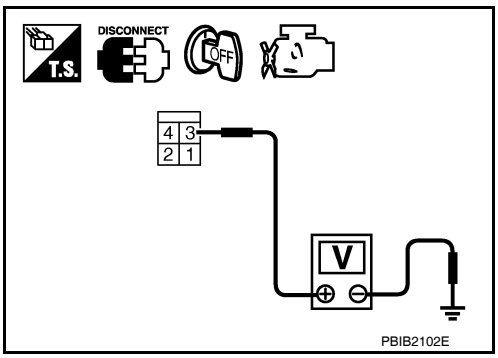

OK or NG

OK >> GO TO 9.
NG >> GO TO 8.

8. DETECT MALFUNCTIONING PART

Check the following.
- Harness connectors M31, E152
- Fuse block (J/B) connector M60
- 10A fuse
- Harness for open or short between stop lamp switch and battery

>> Repair open circuit or short to ground or short to power in harness or connectors.

9. CHECK STOP LAMP SWITCH INPUT SIGNAL CIRCUIT FOR OPEN AND SHORT

1. Disconnect ECM harness connector.
2. Check harness continuity between ECM terminal 101 and stop lamp switch terminal 4. Refer to Wiring Diagram.

Continuity should exist.

3. Also check harness for short to ground and short to power.

OK or NG

OK >> GO TO 10.
NG >> Repair open circuit or short to ground or short to power in harness or connectors.

10. CHECK STOP LAMP SWITCH

Refer to EC-351, "Component Inspection".

OK or NG

OK >> GO TO 11.
NG >> Replace stop lamp switch.

11. CHECK INTERMITTENT INCIDENT

Refer to GI-35, "How to Check Terminal" and GI-38, "Intermittent Incident".

>> **INSPECTION END**

Component Inspection

INFOID:0000000001528790

ASCD BRAKE SWITCH

1. Turn ignition switch OFF.
2. Disconnect ASCD brake switch harness connector.
3. Check harness continuity between ASCD brake switch terminals 1 and 2 under the following conditions.

Condition	Continuity
Brake pedal: Fully released	Should exist.
Brake pedal: Slightly depressed	Should not exist.

If NG, adjust ASCD brake switch installation, refer to BR-15, "Inspection and Adjustment", and perform step 3 again.

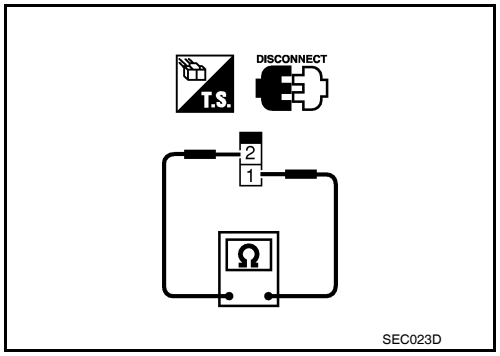

STOP LAMP SWITCH

1. Turn ignition switch OFF.
2. Disconnect stop lamp switch harness connector.
3. Check harness continuity between stop lamp switch terminals 1 and 2 under the following conditions.

Condition	Continuity
Brake pedal: Fully released	Should not exist.
Brake pedal: Slightly depressed	Should exist.

If NG, adjust stop lamp switch installation, refer to BR-15, "Inspection and Adjustment", and perform step 3 again.

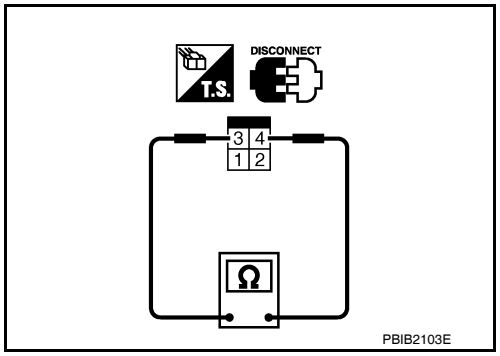

P1574 ICC VEHICLE SPEED SENSOR

Component Description

INFOID:0000000001528791

The ECM receives two vehicle speed signals via CAN communication line. One is sent from “unified meter and A/C amp.”, and the other is from TCM (Transmission control module). The ECM uses these signals for ICC control. Refer to CCS-13 for ICC functions.

On Board Diagnosis Logic

INFOID:0000000001528792

- **This self-diagnosis has the one trip detection logic.**
- **The MIL will not light up for this self-diagnosis.**

NOTE:

- **If DTC P1574 is displayed with DTC U1000, U1001, first perform the trouble diagnosis for DTC U1000, U1001. Refer to EC-87, "On Board Diagnosis Logic".**
- **If DTC P1574 is displayed with DTC U1010, first perform the trouble diagnosis for DTC U1010. Refer to EC-88, "On Board Diagnosis Logic".**
- **If DTC P1574 is displayed with DTC P0500, first perform the trouble diagnosis for DTC P0500. Refer to EC-280, "On Board Diagnosis Logic".**
- **If DTC P1574 is displayed with DTC P0605, first perform the trouble diagnosis for DTC P0605. Refer to EC-291, "On Board Diagnosis Logic".**

DTC No.	Trouble Diagnosis Name	DTC Detecting Condition	Possible Cause
P1574 1574	ICC vehicle speed sensor	ECM detects a difference between two vehicle speed signals is out of the specified range.	• Harness or connectors (The CAN communication line is open or shorted.) • Combination meter • ABS actuator and electric unit (control unit) • Wheel sensor • TCM • ECM

DTC Confirmation Procedure

INFOID:0000000001528793

CAUTION:
Always drive vehicle at a safe speed.
NOTE:
If DTC Confirmation Procedure has been previously conducted, always turn ignition switch OFF and wait at least 10 seconds before conducting the next test.
TESTING CONDITION:
Step 3 may be conducted with the drive wheels lifted in the shop or by driving the vehicle. If a road test is expected to be easier, it is unnecessary to lift the vehicle.

WITH CONSULT-III

1. Start engine.
2. Drive the vehicle at more than 40 km/h (25MPH).
3. Check 1st trip DTC.
4. If DTC is detected, go to EC-352, "Diagnosis Procedure".

WITH GST

Follow the procedure “WITH CONSULT-III” above.

Diagnosis Procedure

INFOID:0000000001528794

1.CHECK DTC WITH TCM

Check DTC with TCM. Refer to TM-30, "OBD-II Diagnostic Trouble Code (DTC)".

OK or NG

OK >> GO TO 2.
NG >> Perform trouble shooting relevant to DTC indicated.

2. CHECK DTC WITH “ABS ACTUATOR AND ELECTRIC UNIT (CONTROL UNIT)”

Refer to BRC-24, "CONSULT-III Function (ABS)".

OK or NG

OK >> GO TO 3.
NG >> Repair or replace.

3. CHECK COMBINATION METER FUNCTION

Refer to MWI-5.

>> **INSPECTION END**

P1574 ASCD VEHICLE SPEED SENSOR

Component Description

INFOID:0000000001365781

The ECM receives two vehicle speed sensor signals via CAN communication line. One is sent from combination meter and the other is from TCM (Transmission control module). The ECM uses these signals for ASCD control. Refer to EC-33, "System Description" for ASCD functions.

On Board Diagnosis Logic

INFOID:0000000001365782

- **This self-diagnosis has the one trip detection logic.**
- **The MIL will not light up for this self-diagnosis.**

NOTE:

- **If DTC P1574 is displayed with DTC U1000, U1001, first perform the trouble diagnosis for DTC U1000, U1001. Refer to EC-87, "DTC Confirmation Procedure" .**
- **If DTC P1574 is displayed with DTC U1010, first perform the trouble diagnosis for DTC U1010. Refer to EC-88, "On Board Diagnosis Logic" .**
- **If DTC P1574 is displayed with DTC P0500, first perform the trouble diagnosis for DTC P0500. Refer to EC-280, "On Board Diagnosis Logic".**
- **If DTC P1574 is displayed with DTC P0605, first perform the trouble diagnosis for DTC P0605. Refer to EC-291, "On Board Diagnosis Logic".**

DTC No.	Trouble Diagnosis Name	DTC Detecting Condition	Possible Cause
P1574 1574	ASCD vehicle speed sensor	ECM detects a difference between two vehicle speed signals is out of the specified range.	• Harness or connectors (The CAN communication line is open or shorted.) • Combination meter • ABS actuator and electric unit (control unit) • Wheel sensor • TCM • ECM

DTC Confirmation Procedure

INFOID:0000000001365783

CAUTION:
Always drive vehicle at a safe speed.
NOTE:
If DTC Confirmation Procedure has been previously conducted, always turn ignition switch OFF and wait at least 10 seconds before conducting the next test.
TESTING CONDITION:
Step 3 may be conducted with the drive wheels lifted in the shop or by driving the vehicle. If a road test is expected to be easier, it is unnecessary to lift the vehicle.

WITH CONSULT-III

1. Start engine (VDC switch OFF).
2. Drive the vehicle at more than 40 km/h (25 MPH).
3. Check DTC.
4. If DTC is detected, go to EC-354, "Diagnosis Procedure".

WITH GST

Follow the procedure “WITH CONSULT-III” above.

Diagnosis Procedure

INFOID:0000000001365784

1.CHECK DTC WITH TCM

Check DTC with TCM. Refer to TM-30, "OBD-II Diagnostic Trouble Code (DTC)".

OK or NG

OK >> GO TO 2.
NG >> Perform trouble shooting relevant to DTC indicated.

2. CHECK DTC WITH ABS ACTUATOR AND ELECTRIC UNIT (CONTROL UNIT)

Refer to BRC-24, "CONSULT-III Function (ABS)".

OK or NG

OK >> GO TO 3.
NG >> Repair or replace.

3. CHECK COMBINATION METER FUNCTION

Check combination meter function.
Refer to MWI-5.

>> **INSPECTION END**

P1805 BRAKE SWITCH

Description

INFOID:0000000001528795

Brake switch signal is applied to the ECM through the stop lamp switch when the brake pedal is depressed. This signal is used mainly to decrease the engine speed when the vehicle is driving.

On Board Diagnosis Logic

INFOID:0000000001528797

The MIL will not light up for this self-diagnosis.

DTC No.	Trouble diagnosis name	DTC detecting condition	Possible cause
P1805 1805	Brake switch	A brake switch signal is not sent to ECM for extremely long time while the vehicle is driving.	• Harness or connectors (Stop lamp switch circuit is open or shorted.) • Stop lamp switch

FAIL-SAFE MODE

When the malfunction is detected, the ECM enters fail-safe mode.

Engine operating condition in fail-safe mode	
ECM controls the electric throttle control actuator by regulating the throttle opening to a small range. Therefore, acceleration will be poor.	
Vehicle condition	Driving condition
When engine is idling	Normal
When accelerating	Poor acceleration

DTC Confirmation Procedure

INFOID:0000000001528798

WITH CONSULT-III

1. Turn ignition switch ON.
2. Fully depress the brake pedal for at least 5 seconds.
3. Erase the DTC with CONSULT-III.
4. Check 1st trip DTC.
5. If 1st trip DTC is detected, go to EC-356, "Diagnosis Procedure".

WITH GST

Follow the procedure “WITH CONSULT-III” above.

Diagnosis Procedure

INFOID:0000000001528800

1. CHECK STOP LAMP SWITCH CIRCUIT

1. Turn ignition switch OFF.
2. Check the stop lamp when depressing and releasing the brake pedal.

Brake pedal	Stop lamp
Fully released	Not illuminated
Slightly depressed	Illuminated

OK or NG

OK >> GO TO 4.
NG >> GO TO 2.

2. CHECK STOP LAMP SWITCH POWER SUPPLY CIRCUIT

1. Disconnect stop lamp switch harness connector.

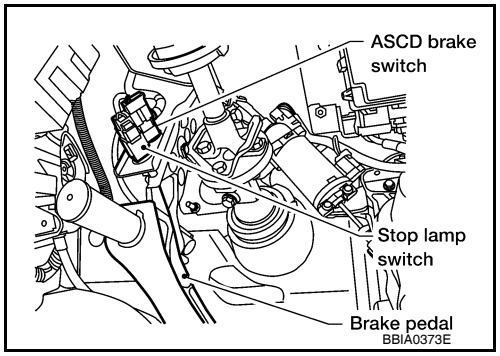

2. Check voltage between stop lamp switch terminal 3 and ground with CONSULT-III or tester.

Voltage: Battery voltage

OK or NG

OK >> GO TO 4.
NG >> GO TO 3.

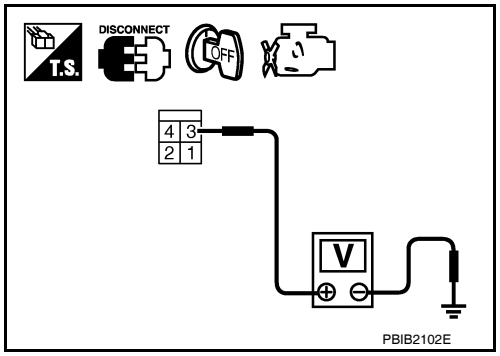

3. DETECT MALFUNCTIONING PART

Check the following.
- Harness connectors M31, E152
- Fuse block (J/B) connector M60
- 10A fuse
- Harness for open and short between stop lamp switch and battery

>> Repair open circuit or short to ground or short to power in harness or connectors.

4. CHECK STOP LAMP SWITCH INPUT SIGNAL CIRCUIT FOR OPEN AND SHORT

1. Turn ignition switch OFF.
2. Disconnect ECM harness connector.
3. Check harness continuity between ECM terminal 101 and stop lamp switch terminal 4. Refer to Wiring Diagram.

Continuity should exist.

4. Also check harness for short to ground and short to power.

OK or NG

OK >> GO TO 5.
NG >> Repair open circuit or short to ground or short to power in harness or connectors.

5. CHECK STOP LAMP SWITCH

Refer to EC-358, "Component Inspection".

OK or NG

OK >> GO TO 6.
NG >> Replace stop lamp switch.

6. CHECK INTERMITTENT INCIDENT

Refer to GI-35, "How to Check Terminal" and GI-38, "Intermittent Incident".

>> **INSPECTION END**

Component Inspection

INFOID:0000000001528801

STOP LAMP SWITCH

1. Disconnect stop lamp switch harness connector.

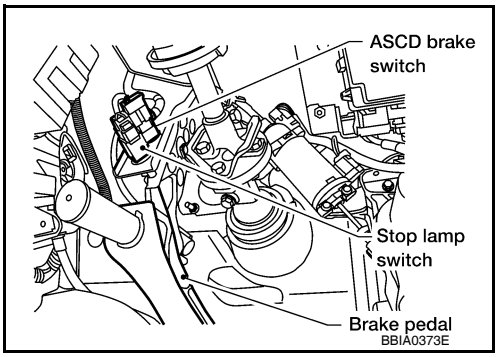

2. Check continuity between stop lamp switch terminals 3 and 4 under the following conditions.

Conditions	Continuity
Brake pedal: Fully released	Should not exist.
Brake pedal: Slightly depressed	Should exist.

3. If NG, adjust stop lamp switch installation, refer to BR-15, "Inspection and Adjustment", and perform step 2 again.

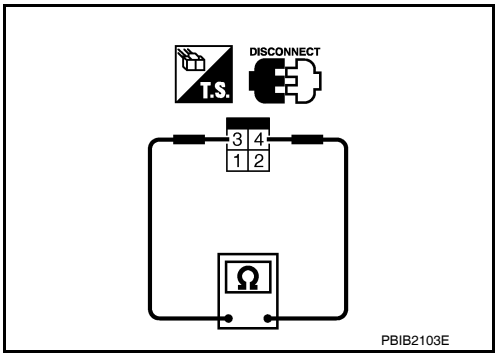

P2100, P2103 THROTTLE CONTROL MOTOR RELAY

Component Description

INFOID:0000000001528860

Power supply for the throttle control motor is provided to the ECM via throttle control motor relay. The throttle control motor relay is ON/OFF controlled by the ECM. When the ignition switch is turned ON, the ECM sends an ON signal to throttle control motor relay and battery voltage is provided to the ECM. When the ignition switch is turned OFF, the ECM sends an OFF signal to throttle control motor relay and battery voltage is not provided to the ECM.

On Board Diagnosis Logic

INFOID:0000000001528862

These self-diagnoses have the one trip detection logic.

DTC No.	Trouble diagnosis name	DTC detecting condition	Possible cause
P2100 2100	Throttle control motor relay circuit open	ECM detects a voltage of power source for throttle control motor is excessively low.	• Harness or connectors (Throttle control motor relay circuit is open) • Throttle control motor relay
P2103 2103	Throttle control motor relay circuit short	ECM detect the throttle control motor relay is stuck ON.	• Harness or connectors (Throttle control motor relay circuit is shorted) • Throttle control motor relay

FAIL-SAFE MODE

When the malfunction is detected, ECM enters fail-safe mode and the MIL lights up.

Engine operating condition in fail-safe mode
ECM stops the electric throttle control actuator control, throttle valve is maintained at a fixed opening (approx. 5 degrees) by the return spring.

DTC Confirmation Procedure

INFOID:0000000001528863

NOTE:
If DTC Confirmation Procedure has been previously conducted, always turn ignition switch OFF and wait at least 10 seconds before conducting the next test.

PROCEDURE FOR DTC P2100

With CONSULT-III

1. Turn ignition switch ON and wait at least 2 seconds.
2. Start engine and let it idle for 5 seconds.
3. Check DTC.
4. If DTC is detected, go to EC-360, "Diagnosis Procedure".

With GST

Follow the procedure “With CONSULT-III” above.

PROCEDURE FOR DTC P2103

TESTING CONDITION:
Before performing the following procedure, confirm that battery voltage is more than 8V.

With CONSULT-III

1. Turn ignition switch ON and wait at least 1 second.
2. Check DTC.
3. If DTC is detected, go to EC-360, "Diagnosis Procedure".

With GST

Follow the procedure “With CONSULT-III” above.

Diagnosis Procedure

INFOID:0000000001528865

1. CHECK THROTTLE CONTROL MOTOR RELAY POWER SUPPLY CIRCUIT-I

1. Turn ignition switch OFF.
2. Check voltage between ECM terminal 104 and ground with CONSULT-III or tester.

Voltage: Battery voltage

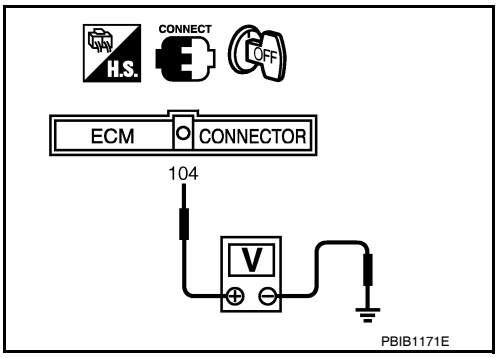

OK or NG

OK >> GO TO 4.
NG >> GO TO 2.

2. CHECK THROTTLE CONTROL MOTOR RELAY POWER SUPPLY CIRCUIT-II

1. Disconnect ECM harness connector.
2. Disconnect IPDM E/R harness connector E122.
3. Check continuity between ECM terminal 104 and IPDM E/R terminal 47.
   Refer to Wiring Diagram.

Continuity should exist.

4. Also check harness for short to ground and short to power.

OK or NG

OK >> GO TO 3.
NG >> Repair open circuit or short to ground or short to power in harness or connectors.

3. CHECK FUSE

1. Disconnect 20A fuse.
2. Check 20A fuse for blown.

OK or NG

OK >> GO TO 7.
NG >> Replace 20A fuse.

4. CHECK THROTTLE CONTROL MOTOR RELAY INPUT SIGNAL CIRCUIT-I

Check voltage between ECM terminal 3 and ground under the following conditions with CONSULT-III or tester.

Ignition switch	Voltage
OFF	Approximately 0V
ON	Battery voltage (11 - 14V)

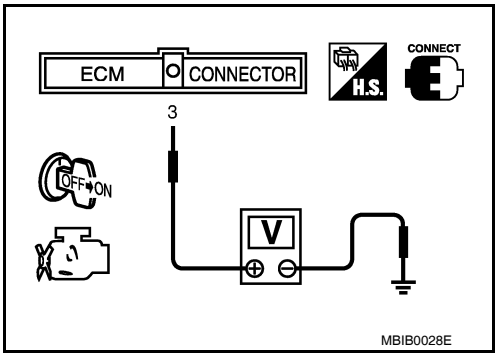

OK or NG

OK >> GO TO 7.
NG >> GO TO 5.

5. CHECK THROTTLE CONTROL MOTOR RELAY INPUT SIGNAL CIRCUIT-II

1. Turn ignition switch OFF.
2. Disconnect ECM harness connector.
3. Disconnect IPDM E/R harness connector E119.
4. Check continuity between ECM terminal 3 and IPDM E/R terminal 6.
   Refer to Wiring Diagram.

Continuity should exist.

5. Also check harness for short to ground and short to power.

OK or NG

OK >> GO TO 7.
NG >> GO TO 6.

6. DETECT MALFUNCTIONING PART

Check the following.
- Harness connectors E2, F32
- Harness for open or short between ECM and IPDM E/R

>> Repair open circuit or short to ground or short to power in harness or connectors.

7. CHECK INTERMITTENT INCIDENT

Refer to GI-35, "How to Check Terminal" and GI-38, "Intermittent Incident".

OK or NG

OK >> Replace IPDM E/R. Refer to PCS-34, "Removal and Installation of IPDM E/R" .
NG >> Repair or replace harness or connectors.

P2101 ELECTRIC THROTTLE CONTROL FUNCTION

Description

INFOID:0000000001365798

NOTE:
If DTC P2101 is displayed with DTC P2100 or 2119, first perform the trouble diagnosis for DTC P2100 or P2119. Refer to EC-359 or EC-368 .
Electric throttle control actuator consists of throttle control motor, throttle position sensor, etc.
The throttle control motor is operated by the ECM and it opens and closes the throttle valve.
The current opening angle of the throttle valve is detected by the throttle position sensor and it provides feedback to the ECM to control the throttle control motor to make the throttle valve opening angle properly in response to driving condition.

On Board Diagnosis Logic

INFOID:0000000001365799

This self-diagnosis has the one trip detection logic.

DTC No.	Trouble diagnosis name	DTC detecting condition	Possible cause
P2101 2101	Electric throttle control performance	Electric throttle control function does not operate properly.	• Harness or connectors (Throttle control motor circuit is open or shorted) • Electric throttle control actuator

FAIL-SAFE MODE

When the malfunction is detected, ECM enters fail-safe mode and the MIL lights up.

Engine operating condition in fail-safe mode
ECM stops the electric throttle control actuator control, throttle valve is maintained at a fixed opening (approx. 5 degrees) by the return spring.

DTC Confirmation Procedure

INFOID:0000000001365800

NOTE:
If DTC Confirmation Procedure has been previously conducted, always turn ignition switch OFF and wait at least 10 seconds before conducting the next test.
TESTING CONDITION:
Before performing the following procedure, confirm that battery voltage is more than 11V when engine is running.

WITH CONSULT-III

1. Turn ignition switch ON and wait at least 2 seconds.
2. Start engine and let it idle for 5 seconds.
3. Check DTC.
4. If DTC is detected, go to EC-362, "Diagnosis Procedure".

WITH GST

Follow the procedure “WITH CONSULT-III” above.

Diagnosis Procedure

INFOID:0000000001365802

1. CHECK GROUND CONNECTIONS

1. Turn ignition switch OFF.
2. Loosen and retighten three ground screws on the body.

Refer to EC-86, "Ground Inspection".

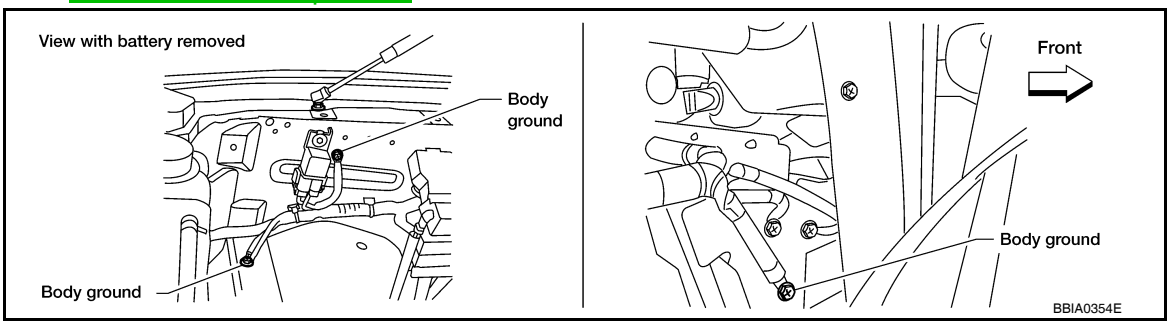

OK or NG

OK >> GO TO 2.
NG >> Repair or replace ground connections.

2. CHECK THROTTLE CONTROL MOTOR RELAY INPUT SIGNAL CIRCUIT-I

1. Check voltage between ECM terminal 3 and ground under the following conditions with CONSULT-III or tester.

Ignition switch	Voltage
OFF	Approximately 0V
ON	Battery voltage (11 - 14V)

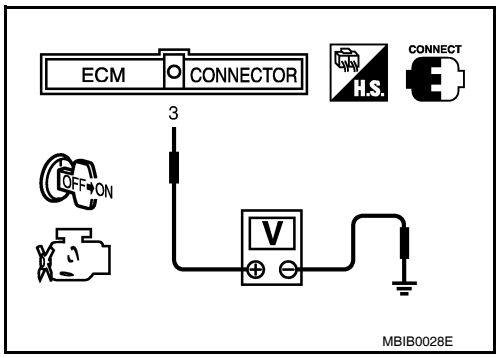

OK or NG

OK >> GO TO 9.
NG >> GO TO 3.

3. CHECK THROTTLE CONTROL MOTOR RELAY POWER SUPPLY CIRCUIT-I

1. Turn ignition switch OFF.
2. Check voltage between ECM terminal 104 and ground with CONSULT-III or tester.

Voltage: Battery voltage

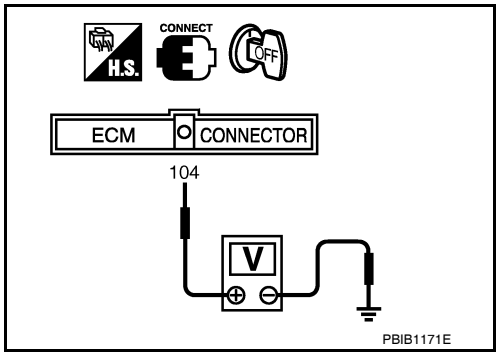

OK or NG

OK >> GO TO 6.
NG >> GO TO 4.

4. CHECK THROTTLE CONTROL MOTOR RELAY POWER SUPPLY CIRCUIT-II

1. Disconnect ECM harness connector.
2. Disconnect IPDM E/R harness connector E122.
3. Check harness continuity between ECM terminal 104 and IPDM E/R terminal 47. Refer to Wiring Diagram.

Continuity should exist.

4. Also check harness for short to ground and short to power.

OK or NG

OK >> GO TO 5.
NG >> Repair open circuit or short to ground or short to power in harness or connectors.

5. CHECK FUSE

1. Disconnect 20A fuse.
2. Check 20A fuse for blown.

OK or NG

OK >> GO TO 8.
NG >> Replace 20A fuse.

6. CHECK THROTTLE CONTROL MOTOR RELAY INPUT SIGNAL CIRCUIT-II

1. Disconnect ECM harness connector.
2. Disconnect IPDM E/R harness connector E119.
3. Check harness continuity between ECM terminal 3 and IPDM E/R terminal 6.
   Refer to Wiring Diagram.

Continuity should exist.

4. Also check harness for short to ground and short to power.

OK or NG

OK >> GO TO 8.
NG >> GO TO 7.

7. DETECT MALFUNCTIONING PART

Check the following.
- Harness connectors E2, F32
- Harness for open or short between ECM and IPDM E/R

>> Repair open circuit or short to ground or short to power in harness or connectors.

8. CHECK INTERMITTENT INCIDENT

Refer to GI-35, "How to Check Terminal" and GI-38, "Intermittent Incident".

OK or NG

OK >> Replace IPDM E/R. Refer to PCS-34, "Removal and Installation of IPDM E/R".
NG >> Repair or replace harness or connectors.

9. CHECK THROTTLE CONTROL MOTOR OUTPUT SIGNAL CIRCUIT FOR OPEN OR SHORT

1. Turn ignition switch OFF.
2. Disconnect electric throttle control actuator harness connector.
3. Disconnect ECM harness connector.
4. Check harness continuity between the following terminals.
   Refer to Wiring Diagram.

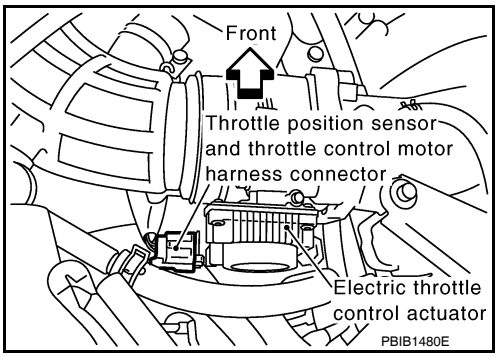

Electric throttle control actuator terminal	ECM terminal	Continuity
5	5	Should not exist
	4	Should exist
6	5	Should exist
	4	Should not exist

5. Also check harness for short to ground and short to power.

OK or NG

OK >> GO TO 10.
NG >> Repair or replace.

10. CHECK ELECTRIC THROTTLE CONTROL ACTUATOR VISUALLY

1. Remove the intake air duct.

2. Check if foreign matter is caught between the throttle valve and the housing.

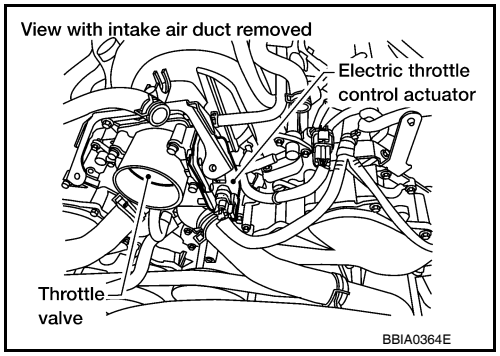

OK or NG

OK >> GO TO 11.
NG >> Remove the foreign matter and clean the electric throttle control actuator inside.

11. CHECK THROTTLE CONTROL MOTOR

Refer to EC-365, "Component Inspection".

OK or NG

OK >> GO TO 12.
NG >> GO TO 13.

12. CHECK INTERMITTENT INCIDENT

Refer to GI-35, "How to Check Terminal" and GI-38, "Intermittent Incident".

OK or NG

OK >> GO TO 13.
NG >> Repair or replace harness or connectors.

13. REPLACE ELECTRIC THROTTLE CONTROL ACTUATOR

1. Replace the electric throttle control actuator.
2. Perform EC-18, "Throttle Valve Closed Position Learning".
3. Perform EC-18, "Idle Air Volume Learning".

>> **INSPECTION END**

Component Inspection

INFOID:0000000001365803

THROTTLE CONTROL MOTOR

1. Disconnect electric throttle control actuator harness connector.
2. Check resistance between terminals 5 and 6.

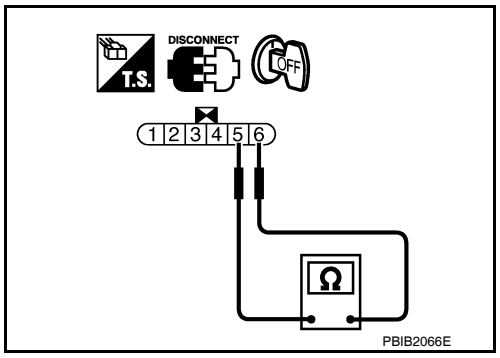

Resistance: Approximately 1 - 15 Ω [at 25 °C (77°F)]

3. If NG, replace electric throttle control actuator and go to next step.
4. Perform EC-18, "Throttle Valve Closed Position Learning" .
5. Perform EC-18, "Idle Air Volume Learning" .

P2118 THROTTLE CONTROL MOTOR

Component Description

INFOID:0000000001528866

The throttle control motor is operated by the ECM and it opens and closes the throttle valve.
The current opening angle of the throttle valve is detected by the throttle position sensor and it provides feedback to the ECM to control the throttle control motor to make the throttle valve opening angle properly in response to driving condition.

On Board Diagnosis Logic

INFOID:0000000001528867

This self-diagnosis has the one trip detection logic.

DTC No.	Trouble diagnosis name	DTC detecting condition	Possible cause
P2118 2118	Throttle control motor circuit short	ECM detects short in both circuits between ECM and throttle control motor.	• Harness or connectors (Throttle control motor circuit is shorted.) • Electric throttle control actuator (Throttle control motor)

FAIL-SAFE MODE

When the malfunction is detected, the ECM enters fail-safe mode and the MIL lights up.

Engine operating condition in fail-safe mode
ECM stops the electric throttle control actuator control, throttle valve is maintained at a fixed opening (approx. 5 degrees) by the return spring.

DTC Confirmation Procedure

INFOID:0000000001528868

NOTE:
If DTC Confirmation Procedure has been previously conducted, always turn ignition switch OFF and wait at least 10 seconds before conducting the next test.

WITH CONSULT-III

1. Turn ignition switch ON and wait at least 2 seconds.
2. Start engine and let it idle for 5 seconds.
3. Check DTC.
4. If DTC is detected, go to EC-366, "Diagnosis Procedure".

WITH GST

Follow the procedure “WITH CONSULT-III” above.

Diagnosis Procedure

INFOID:0000000001528870

1.CHECK GROUND CONNECTIONS

1. Turn ignition switch OFF.
2. Loosen and retighten three ground screws on the body.
   Refer to EC-86, "Ground Inspection".

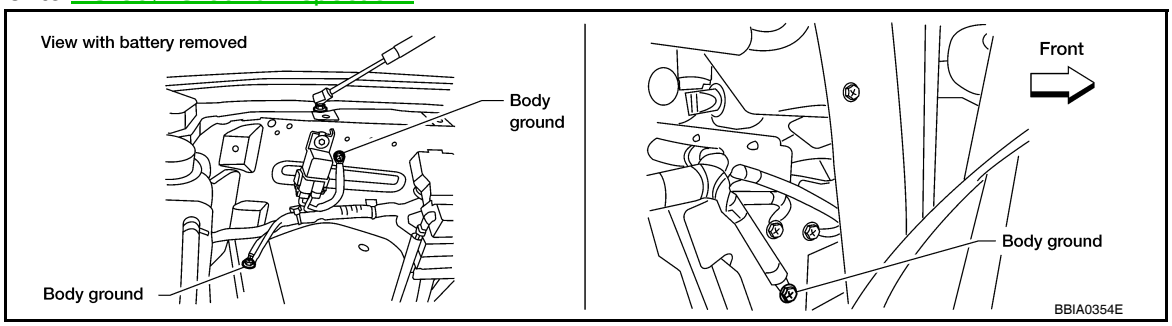

OK or NG

OK >> GO TO 2.

NG >> Repair or replace ground connections.

2. CHECK THROTTLE CONTROL MOTOR OUTPUT SIGNAL CIRCUIT FOR OPEN OR SHORT

1. Disconnect electric throttle control actuator (1) harness connector.
- Illustration shows the view with intake air duct removed.
2. Disconnect ECM harness connector.
3. Check harness continuity between the following terminals. Refer to Wiring Diagram.

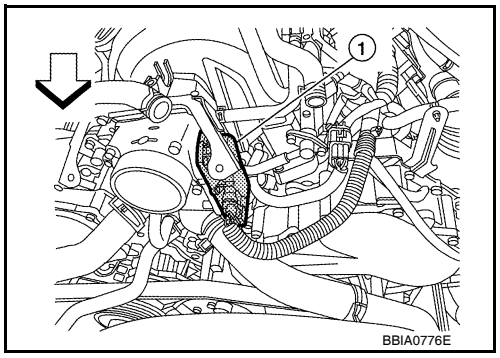

Electric throttle control actuator terminal	ECM terminal	Continuity
5	5	Should not exist
	4	Should exist
6	5	Should exist
	4	Should not exist

4. Also check harness for short to ground and short to power.

OK or NG

OK >> GO TO 3.
NG >> Repair or replace.

3. CHECK THROTTLE CONTROL MOTOR

Refer to EC-367, "Component Inspection".

OK or NG

OK >> GO TO 4.
NG >> GO TO 5.

4. CHECK INTERMITTENT INCIDENT

Refer to GI-35, "How to Check Terminal" and GI-38, "Intermittent Incident".

OK or NG

OK >> GO TO 5.
NG >> Repair or replace harness or connectors.

5. REPLACE ELECTRIC THROTTLE CONTROL ACTUATOR

1. Replace the electric throttle control actuator.
2. Perform EC-18, "Throttle Valve Closed Position Learning".
3. Perform EC-18, "Idle Air Volume Learning".

>> **INSPECTION END**

Component Inspection

INFOID:0000000001528871

THROTTLE CONTROL MOTOR

1. Disconnect electric throttle control actuator harness connector.
2. Check resistance between terminals 5 and 6.

Resistance: Approximately 1 - 15 Ω [at 25 °C (77°F)]

3. If NG, replace electric throttle control actuator and go to next step.
4. Perform EC-18, "Throttle Valve Closed Position Learning".
5. Perform EC-18, "Idle Air Volume Learning".

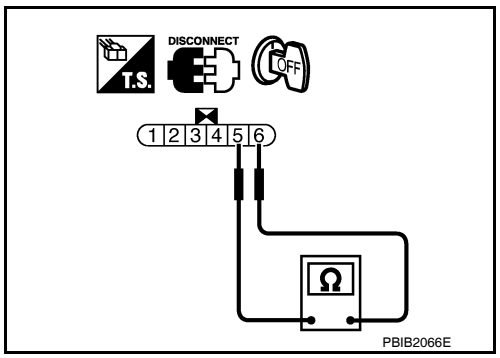

P2119 ELECTRIC THROTTLE CONTROL ACTUATOR

Component Description

INFOID:0000000001528873

Electric throttle control actuator consists of throttle control motor, throttle position sensor, etc.
The throttle control motor is operated by the ECM and it opens and closes the throttle valve.
The throttle position sensor detects the throttle valve position, and the opening and closing speed of the throttle valve and feeds the voltage signals to the ECM. The ECM judges the current opening angle of the throttle valve from these signals and the ECM controls the throttle control motor to make the throttle valve opening angle properly in response to driving condition.

On Board Diagnosis Logic

INFOID:0000000001528874

This self-diagnosis has one trip detection logic.

DTC No.	Trouble diagnosis name	DTC detecting condition		Possible cause
P2119 2119	Electric throttle control actuator	A)	Electric throttle control actuator does not function properly due to the return spring malfunction.	• Electric throttle control actuator
		B)	Throttle valve opening angle in fail-safe mode is not in specified range.	
		C)	ECM detect the throttle valve is stuck open.	

FAIL-SAFE MODE

When the malfunction is detected, ECM enters fail-safe mode and the MIL lights up.

Detected items	Engine operating condition in fail-safe mode
Malfunction A	The ECM controls the electric throttle actuator by regulating the throttle opening around the idle position. The engine speed will not rise more than 2,000 rpm.
Malfunction B	ECM controls the electric throttle control actuator by regulating the throttle opening to 20 degrees or less.
Malfunction C	While the vehicle is driving, it slows down gradually by fuel cut. After the vehicle stops, the engine stalls. The engine can restart in N or P position, and engine speed will not exceed 1,000 rpm or more.

DTC Confirmation Procedure

INFOID:0000000001528875

NOTE:
- **Perform PROCEDURE FOR MALFUNCTION A AND B first. If the DTC cannot be confirmed, perform PROCEDURE FOR MALFUNCTION C.**
- If DTC Confirmation Procedure has been previously conducted, always turn ignition switch OFF and wait at least 10 seconds before conducting the next test.

PROCEDURE FOR MALFUNCTION A AND B

With CONSULT-III

1. Turn ignition switch ON and wait at least 1 second.
2. Shift selector lever to D position and wait at least 3 seconds.
3. Shift selector lever to P or N position.
4. Turn ignition switch OFF and wait at least 10 seconds.
5. Turn ignition switch ON and wait at least 1 second.
6. Shift selector lever to D position and wait at least 3 seconds.
7. Shift selector lever to P or N position.
8. Turn ignition switch OFF, wait at least 10 seconds and then turn ON.
9. Check DTC.
10. If DTC is detected, go to EC-369, "Diagnosis Procedure".

With GST

Follow the procedure “With CONSULT-III” above.

PROCEDURE FOR MALFUNCTION C

With CONSULT-III

1. Turn ignition switch ON and wait at least 1 second.
2. Shift selector lever to D position and wait at least 3 seconds.
3. Shift selector lever to P position.
4. Start engine and let it idle for 3 seconds.
5. Check DTC.
6. If DTC is detected, go to EC-369, "Diagnosis Procedure".

With GST

Follow the procedure “With CONSULT-III” above.

Diagnosis Procedure

INFOID:0000000001528876

1. CHECK ELECTRIC THROTTLE CONTROL ACTUATOR VISUALLY

1. Remove the intake air duct.
2. Check if a foreign matter is caught between the throttle valve and the housing.

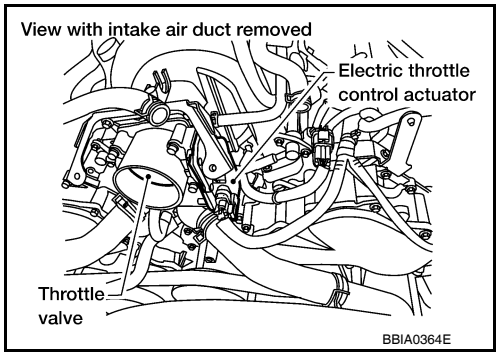

OK or NG

OK >> GO TO 2.

NG >> Remove the foreign matter and clean the electric throttle control actuator inside.

2. REPLACE ELECTRIC THROTTLE CONTROL ACTUATOR

1. Replace the electric throttle control actuator.
2. Perform EC-18, "Throttle Valve Closed Position Learning".
3. Perform EC-18, "Idle Air Volume Learning".

>> **INSPECTION END**

P2122, P2123 APP SENSOR

Component Description

INFOID:0000000001365823

The accelerator pedal position sensor is installed on the upper end of the accelerator pedal assembly. The sensor detects the accelerator position and sends a signal to the ECM.
Accelerator pedal position sensor has two sensors. These sensors are a kind of potentiometers which transform the accelerator pedal position into output voltage, and emit the voltage signal to the ECM. In addition, these sensors detect the opening and closing speed of the accelerator pedal and feed the voltage signals to the ECM. The ECM judges the current opening angle of the accelerator pedal from these signals and controls the throttle control motor based on these signals.

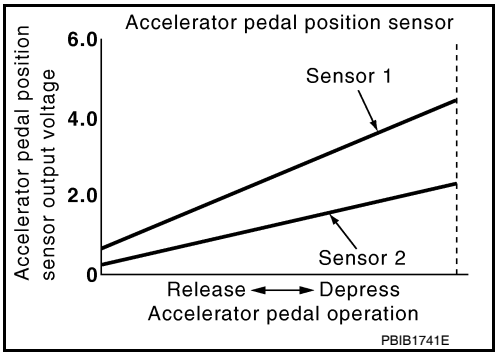

Idle position of the accelerator pedal is determined by the ECM receiving the signal from the accelerator pedal position sensor. The ECM uses this signal for the engine operation such as fuel cut.

On Board Diagnosis Logic

INFOID:0000000001365825

These self-diagnoses have the one trip detection logic.
NOTE:
If DTC P2122 or P2123 is displayed with DTC P0643, first perform the trouble diagnosis for DTC P0643. Refer to EC-293 .

DTC No.	Trouble diagnosis name	DTC detecting condition	Possible cause
P2122 2122	Accelerator pedal position sensor 1 circuit low input	An excessively low voltage from the APP sensor 1 is sent to ECM.	• Harness or connectors (The APP sensor 1 circuit is open or shorted.) • Accelerator pedal position sensor (Accelerator pedal position sensor 1)
P2123 2123	Accelerator pedal position sensor 1 circuit high input	An excessively high voltage from the APP sensor 1 is sent to ECM.	

FAIL-SAFE MODE

When the malfunction is detected, ECM enters fail-safe mode and the MIL lights up.

Engine operating condition in fail-safe mode
The ECM controls the electric throttle control actuator in regulating the throttle opening in order for the idle position to be within +10 degrees. The ECM regulates the opening speed of the throttle valve to be slower than the normal condition. So, the acceleration will be poor.

DTC Confirmation Procedure

INFOID:0000000001365826

NOTE:
If DTC Confirmation Procedure has been previously conducted, always turn ignition switch OFF and wait at least 10 seconds before conducting the next test.
TESTING CONDITION:
Before performing the following procedure, confirm that battery voltage is more than 8V at idle.

WITH CONSULT-III

1. Start engine and let it idle for 1 second.
2. Check DTC.
3. If DTC is detected, go to EC-371, "Diagnosis Procedure".

WITH GST

Follow the procedure “WITH CONSULT-III” above.

Diagnosis Procedure

INFOID:0000000001365828

1. CHECK GROUND CONNECTIONS

1. Turn ignition switch OFF.
2. Loosen and retighten three ground screws on the body.
   Refer to EC-86, "Ground Inspection".

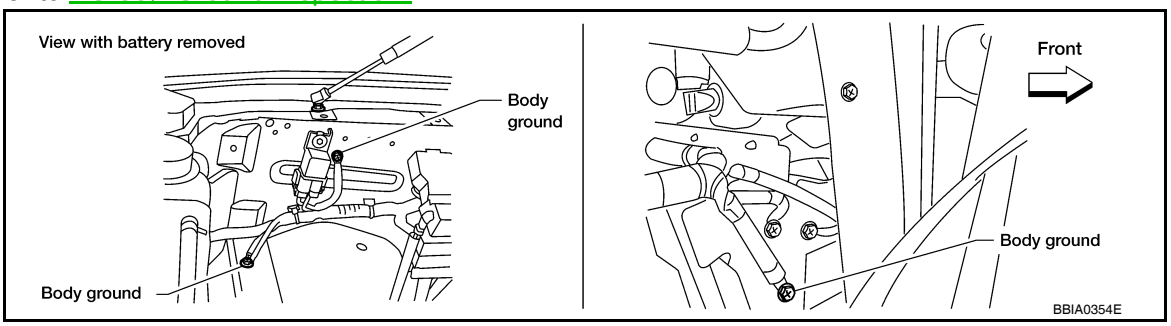

OK or NG

OK >> GO TO 2.
NG >> Repair or replace ground connections.

2. CHECK APP SENSOR 1 POWER SUPPLY CIRCUIT

1. Disconnect accelerator pedal position (APP) sensor harness connector.
2. Turn ignition switch ON.

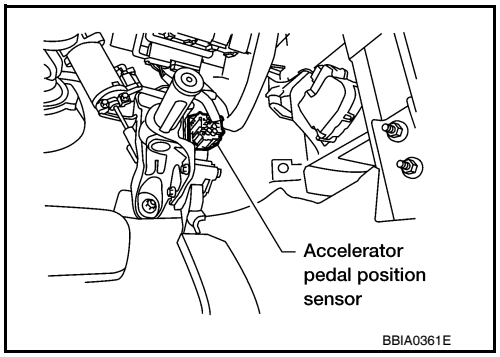

3. Check voltage between APP sensor terminal 7 and ground with CONSULT-III or tester.

Voltage: Approximately 5V

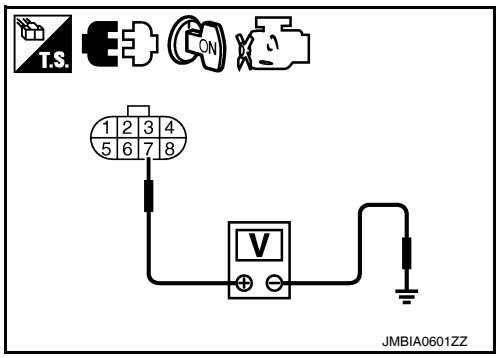

OK or NG

OK >> GO TO 3.
NG >> Repair open circuit or short to ground or short to power in harness or connectors.

3. CHECK APP SENSOR 1 GROUND CIRCUIT FOR OPEN AND SHORT

1. Turn ignition switch OFF.
2. Disconnect ECM harness connector.
3. Check harness continuity between ECM terminal 82 and APP sensor terminal 1.
   Refer to Wiring Diagram.

Continuity should exist.

4. Also check harness for short to ground and short to power.

OK or NG

OK >> GO TO 4.
NG >> Repair open circuit or short to ground or short to power in harness or connectors.

4. CHECK APP SENSOR INPUT SIGNAL CIRCUIT FOR OPEN AND SHORT

1. Check harness continuity between ECM terminal 106 and APP sensor terminal 2.
   Refer to Wiring Diagram.

   Continuity should exist.

2. Also check harness for short to ground and short to power.

OK or NG

OK >> GO TO 5.
NG >> Repair open circuit or short to ground or short to power in harness or connectors.

5. CHECK APP SENSOR

Refer to EC-372, "Component Inspection".

OK or NG

OK >> GO TO 7.
NG >> GO TO 6.

6. REPLACE ACCELERATOR PEDAL ASSEMBLY

1. Replace the accelerator pedal assembly.
2. Perform EC-18, "Accelerator Pedal Released Position Learning".
3. Perform EC-18, "Throttle Valve Closed Position Learning".
4. Perform EC-18, "Idle Air Volume Learning".

>> **INSPECTION END**

7. CHECK INTERMITTENT INCIDENT

Refer to GI-35, "How to Check Terminal" and GI-38, "Intermittent Incident".

>> **INSPECTION END**

Component Inspection

INFOID:0000000001365829

ACCELERATOR PEDAL POSITION SENSOR

1. Reconnect all harness connectors disconnected.
2. Turn ignition switch ON.
3. Check voltage between ECM terminals 106 (APP sensor 1 signal), 98 (APP sensor 2 signal) and ground under the following conditions.

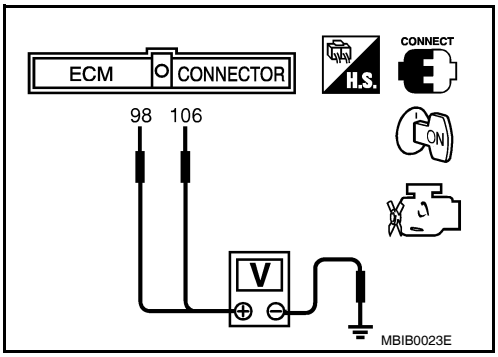

Terminal	Accelerator pedal	Voltage
106 (Accelerator pedal position sensor 1)	Fully released	0.5 - 1.0V
	Fully depressed	4.2 - 4.8V
98 (Accelerator pedal position sensor 2)	Fully released	0.25 - 0.5V
	Fully depressed	2.0 - 2.5V

4. If NG, replace accelerator pedal assembly and go to next step.
5. Perform EC-18, "Accelerator Pedal Released Position Learning".
6. Perform EC-18, "Throttle Valve Closed Position Learning".
7. Perform EC-18, "Idle Air Volume Learning".

P2127, P2128 APP SENSOR

Component Description

INFOID:0000000001365832

The accelerator pedal position sensor is installed on the upper end of the accelerator pedal assembly. The sensor detects the accelerator position and sends a signal to the ECM.
Accelerator pedal position sensor has two sensors. These sensors are a kind of potentiometers which transform the accelerator pedal position into output voltage, and emit the voltage signal to the ECM. In addition, these sensors detect the opening and closing speed of the accelerator pedal and feed the voltage signals to the ECM. The ECM judges the current opening angle of the accelerator pedal from these signals and controls the throttle control motor based on these signals.

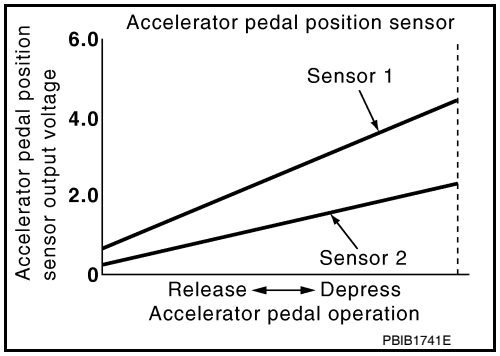

Idle position of the accelerator pedal is determined by the ECM receiving the signal from the accelerator pedal position sensor. The ECM uses this signal for the engine operation such as fuel cut.

On Board Diagnosis Logic

INFOID:0000000001365834

These self-diagnoses have the one trip detection logic.

DTC No.	Trouble diagnosis name	DTC detecting condition	Possible cause
P2127 2127	Accelerator pedal position sensor 2 circuit low input	An excessively low voltage from the APP sensor 2 is sent to ECM.	• Harness or connectors (APP sensor 2 circuit is open or shorted.) (TP sensor circuit is shorted.) • Accelerator pedal position sensor (Accelerator pedal position sensor 2) • Electric throttle control actuator (TP sensor)
P2128 2128	Accelerator pedal position sensor 2 circuit high input	An excessively high voltage from the APP sensor 2 is sent to ECM.	

FAIL-SAFE MODE

When the malfunction is detected, ECM enters fail-safe mode and the MIL lights up.

Engine operating condition in fail-safe mode
The ECM controls the electric throttle control actuator in regulating the throttle opening in order for the idle position to be within +10 degrees. The ECM regulates the opening speed of the throttle valve to be slower than the normal condition. So, the acceleration will be poor.

DTC Confirmation Procedure

INFOID:0000000001365835

NOTE:
If DTC Confirmation Procedure has been previously conducted, always turn ignition switch OFF and wait at least 10 seconds before conducting the next test.
TESTING CONDITION:
Before performing the following procedure, confirm that battery voltage is more than 8V at idle.

WITH CONSULT-III

1. Start engine and let it idle for 1 second.
2. Check DTC.
3. If DTC is detected, go to EC-373, "Diagnosis Procedure".

WITH GST

Follow the procedure “WITH CONSULT-III” above.

Diagnosis Procedure

INFOID:0000000001365837

1. CHECK GROUND CONNECTIONS

1. Turn ignition switch OFF.
2. Loosen and retighten three ground screws on the body.
   Refer to EC-86, "Ground Inspection".

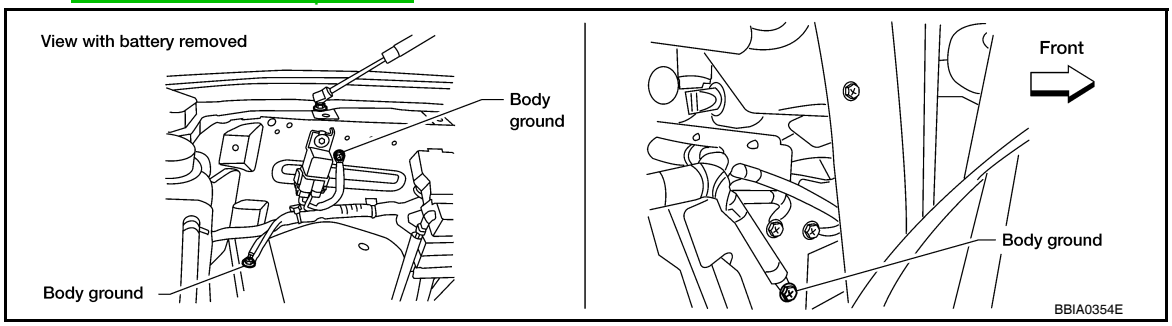

OK or NG

OK >> GO TO 2.
NG >> Repair or replace ground connections.

2. CHECK APP SENSOR 2 POWER SUPPLY CIRCUIT-I

1. Disconnect accelerator pedal position (APP) sensor harness connector.
2. Turn ignition switch ON.

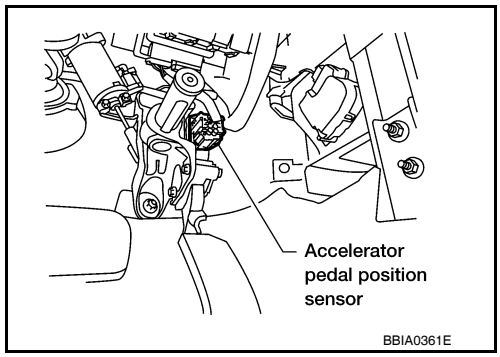

3. Check voltage between APP sensor terminal 6 and ground with CONSULT-III or tester.

Voltage: Approximately 5V

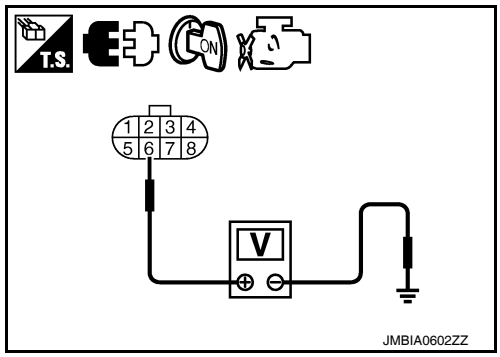

OK or NG

OK >> GO TO 7.
NG >> GO TO 3.

3. CHECK APP SENSOR 2 POWER SUPPLY CIRCUIT-II

1. Turn ignition switch OFF.
2. Disconnect ECM harness connector.
3. Check harness continuity between APP sensor terminal 6 and ECM terminal 91.
   Refer to Wiring Diagram.

Continuity should exist.

OK or NG

OK >> GO TO 4.
NG >> Repair open circuit.

4. CHECK APP SENSOR 2 POWER SUPPLY CIRCUIT-III

Check harness for short to power and short to ground, between the following terminals

ECM terminal	Sensor terminal	Reference Wiring Diagram
47	Electric throttle control actuator terminal 2	EC-439, "Wiring Diagram - ENGINE CONTROL SYSTEM -"
91	APP sensor terminal 6	

OK or NG

OK >> GO TO 5.
NG >> Repair short to ground or short to power in harness or connectors.

5. CHECK THROTTLE POSITION SENSOR

Refer to EC-380, "Component Inspection".

OK or NG

OK >> GO TO 11.
NG >> GO TO 6.

6. REPLACE ELECTRIC THROTTLE CONTROL ACTUATOR

1. Replace the electric throttle control actuator.
2. Perform EC-18, "Throttle Valve Closed Position Learning".
3. Perform EC-18, "Idle Air Volume Learning".

>> **INSPECTION END**

7. CHECK APP SENSOR 2 GROUND CIRCUIT FOR OPEN AND SHORT

1. Turn ignition switch OFF.
2. Disconnect ECM harness connector.
3. Check harness continuity between ECM terminal 83 and APP sensor terminal 3.
   Refer to Wiring Diagram.

   Continuity should exist.

4. Also check harness for short to ground and short to power.

OK or NG

OK >> GO TO 8.
NG >> Repair open circuit or short to ground or short to power in harness or connectors.

8. CHECK APP SENSOR 2 INPUT SIGNAL CIRCUIT FOR OPEN AND SHORT

1. Check harness continuity between ECM terminal 98 and APP sensor terminal 5.
   Refer to Wiring Diagram.

   Continuity should exist.

2. Also check harness for short to ground and short to power.

OK or NG

OK >> GO TO 9.
NG >> Repair open circuit or short to ground or short to power in harness or connectors.

9. CHECK APP SENSOR

Refer to EC-376, "Component Inspection".

OK or NG

OK >> GO TO 11.
NG >> GO TO 10.

10. REPLACE ACCELERATOR PEDAL ASSEMBLY

1. Replace the accelerator pedal assembly.
2. Perform EC-18, "Accelerator Pedal Released Position Learning".
3. Perform EC-18, "Throttle Valve Closed Position Learning".
4. Perform EC-18, "Idle Air Volume Learning".

>> **INSPECTION END**

11. CHECK INTERMITTENT INCIDENT

Refer to GI-35, "How to Check Terminal" and GI-38, "Intermittent Incident".

>> **INSPECTION END**

Component Inspection

INFOID:0000000001365838

ACCELERATOR PEDAL POSITION SENSOR

1. Reconnect all harness connectors disconnected.
2. Turn ignition switch ON.
3. Check voltage between ECM terminals 106 (APP sensor 1 signal), 98 (APP sensor 2 signal) and ground under the following conditions.

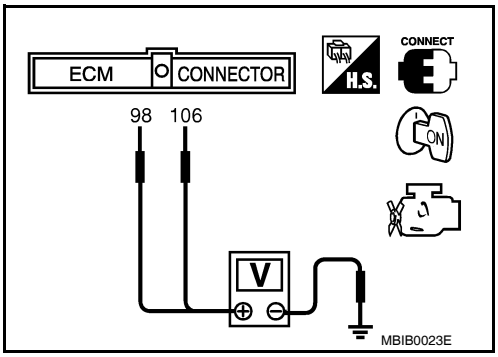

Terminal	Accelerator pedal	Voltage
106 (Accelerator pedal position sensor 1)	Fully released	0.5 - 1.0V
	Fully depressed	4.2 - 4.8V
98 (Accelerator pedal position sensor 2)	Fully released	0.25 - 0.5V
	Fully depressed	2.0 - 2.5V

4. If NG, replace accelerator pedal assembly and go to next step.
5. Perform EC-18, "Accelerator Pedal Released Position Learning".
6. Perform EC-18, "Throttle Valve Closed Position Learning".
7. Perform EC-18, "Idle Air Volume Learning".

P2135 TP SENSOR

Component Description

INFOID:0000000001365840

Electric throttle control actuator consists of throttle control motor, throttle position sensor, etc. The throttle position sensor responds to the throttle valve movement.
The throttle position sensor has the two sensors. These sensors are a kind of potentiometers which transform the throttle valve position into output voltage, and emit the voltage signal to the ECM. In addition, these sensors detect the opening and closing speed of the throttle valve and feed the voltage signals to the ECM. The ECM judges the current opening angle of the throttle valve from these signals and the ECM controls the throttle control motor to make the throttle valve opening angle properly in response to driving condition.

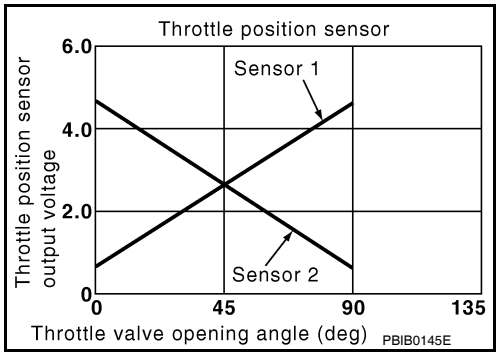

On Board Diagnosis Logic

INFOID:0000000001365842

This self-diagnosis has the one trip detection logic.

DTC No.	Trouble diagnosis name	DTC detecting condition	Possible cause
P2135 2135	Throttle position sensor circuit range/performance	Rationally incorrect voltage is sent to ECM compared with the signals from TP sensor 1 and TP sensor 2.	• Harness or connector (TP sensor 1 and 2 circuit is open or shorted.) (APP sensor 2 circuit is shorted.) • Electric throttle control actuator (TP sensor 1 and 2) • Accelerator pedal position sensor (APP sensor 2)

FAIL-SAFE MODE

When the malfunction is detected, the ECM enters fail-safe mode and the MIL lights up.

Engine operation condition in fail-safe mode
The ECM controls the electric throttle control actuator in regulating the throttle opening in order for the idle position to be within +10 degrees. The ECM regulates the opening speed of the throttle valve to be slower than the normal condition. So, the acceleration will be poor.

DTC Confirmation Procedure

INFOID:0000000001365843

NOTE:
If DTC Confirmation Procedure has been previously conducted, always turn ignition switch OFF and wait at least 10 seconds before conducting the next test.
TESTING CONDITION:
Before performing the following procedure, confirm that battery voltage is more than 8V at idle.

WITH CONSULT-III

1. Start engine and let it idle for 1 second.
2. Check DTC.
3. If DTC is detected, go to EC-377, "Diagnosis Procedure".

WITH GST

Follow the procedure “WITH CONSULT-III” above.

Diagnosis Procedure

INFOID:0000000001365845

1. CHECK GROUND CONNECTIONS

1. Turn ignition switch OFF.

2. Loosen and retighten three ground screws on the body.
   Refer to EC-86, "Ground Inspection".

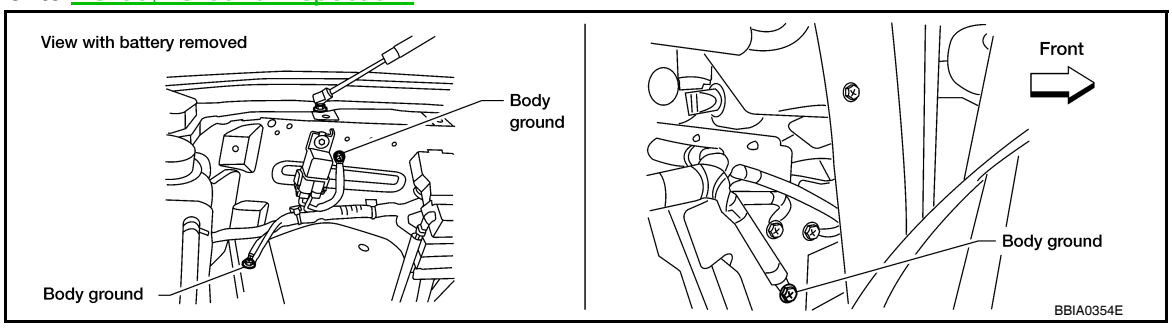

OK or NG

OK >> GO TO 2.
NG >> Repair or replace ground connections.

2. CHECK THROTTLE POSITION SENSOR POWER SUPPLY CIRCUIT-I

1. Disconnect electric throttle control actuator (1) harness connector.
- Illustration shows the view with intake air duct removed.
2. Turn ignition switch ON.

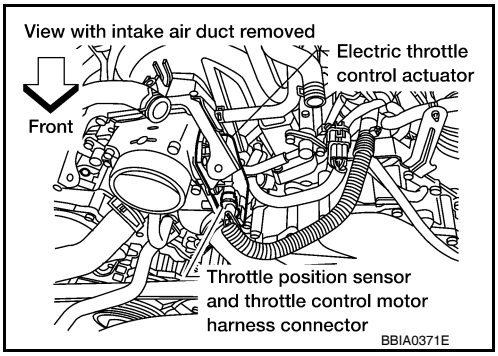

3. Check voltage between electric throttle control actuator (1) terminal 2 and ground with CONSULT-III or tester.

Voltage: Approximately 5V

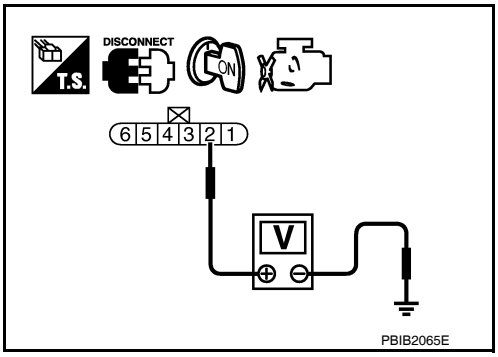

OK or NG

OK >> GO TO 7.
NG >> GO TO 3.

3. CHECK THROTTLE POSITION SENSOR POWER SUPPLY CIRCUIT-II

1. Turn ignition switch OFF.
2. Disconnect ECM harness connector.
3. Check harness continuity between electric throttle control actuator terminal 2 and ECM terminal 47.
   Refer to Wiring Diagram.

Continuity should exist.

OK or NG

OK >> GO TO 4.
NG >> Repair open circuit.

4. CHECK THROTTLE POSITION SENSOR POWER SUPPLY CIRCUIT-III

Check harness for short to power and short to ground, between the following terminals.

ECM terminal	Sensor terminal	Reference Wiring Diagram
47	Electric throttle control actuator terminal 2	EC-439, "Wiring Diagram - ENGINE CONTROL SYSTEM -"
91	APP sensor terminal 6	

OK or NG

OK >> GO TO 5.
NG >> Repair short to ground or short to power in harness or connectors.

5. CHECK ACCELERATOR PEDAL POSITION SENSOR

Refer to EC-384, "Component Inspection".

OK or NG

OK >> GO TO 11.
NG >> GO TO 6.

6. REPLACE ACCELERATOR PEDAL ASSEMBLY

1. Replace the accelerator pedal assembly.
2. Perform EC-18, "Accelerator Pedal Released Position Learning".
3. Perform EC-18, "Throttle Valve Closed Position Learning".
4. Perform EC-18, "Idle Air Volume Learning".

>> **INSPECTION END**

7. CHECK THROTTLE POSITION SENSOR GROUND CIRCUIT FOR OPEN AND SHORT

1. Turn ignition switch OFF.
2. Disconnect ECM harness connector.
3. Check harness continuity between electric throttle control actuator terminal 4 and ECM terminal 66.
   Refer to Wiring Diagram.

   Continuity should exist.

4. Also check harness for short to ground and short to power.

OK or NG

OK >> GO TO 8.
NG >> Repair open circuit or short to ground or short to power in harness or connectors.

8. CHECK THROTTLE POSITION SENSOR INPUT SIGNAL CIRCUIT FOR OPEN AND SHORT

1. Check harness continuity between ECM terminal 50 and electric throttle control actuator terminal 1, ECM terminal 69 and electric throttle control actuator terminal 3.
   Refer to Wiring Diagram.

   Continuity should exist.

2. Also check harness for short to ground and short to power.

OK or NG

OK >> GO TO 9.
NG >> Repair open circuit or short to ground or short to power in harness or connectors.

9. CHECK THROTTLE POSITION SENSOR

Refer to EC-380, "Component Inspection".

OK or NG

OK >> GO TO 11.
NG >> GO TO 10.

10. REPLACE ELECTRIC THROTTLE CONTROL ACTUATOR

1. Replace the electric throttle control actuator.
2. Perform EC-18, "Throttle Valve Closed Position Learning".
3. Perform EC-18, "Idle Air Volume Learning".

>> **INSPECTION END**

11. CHECK INTERMITTENT INCIDENT

Refer to GI-35, "How to Check Terminal" and GI-38, "Intermittent Incident".

>> **INSPECTION END**

Component Inspection

INFOID:0000000001365846

THROTTLE POSITION SENSOR

1. Reconnect all harness connectors disconnected.
2. Perform EC-18, "Throttle Valve Closed Position Learning".
3. Turn ignition switch ON.
4. Set selector lever to D position.
5. Check voltage between ECM terminals 50 (TP sensor 1 signal), 69 (TP sensor 2 signal) and ground under the following conditions.

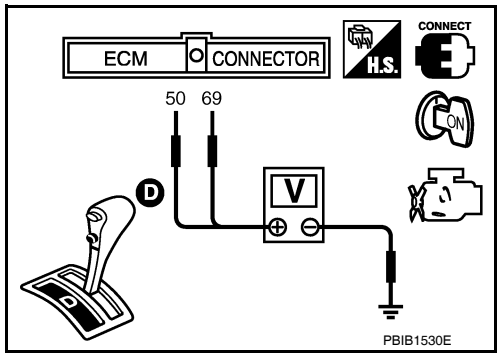

Terminal	Accelerator pedal	Voltage
50 (Throttle position sensor 1)	Fully released	More than 0.36V
	Fully depressed	Less than 4.75V
69 (Throttle position sensor 2)	Fully released	Less than 4.75V
	Fully depressed	More than 0.36V

6. If NG, replace electric throttle control actuator and go to the next step.
7. Perform EC-18, "Throttle Valve Closed Position Learning".
8. Perform EC-18, "Idle Air Volume Learning".

P2138 APP SENSOR

Component Description

INFOID:0000000001528877

The accelerator pedal position sensor is installed on the upper end of the accelerator pedal assembly. The sensor detects the accelerator position and sends a signal to the ECM.
Accelerator pedal position sensor has two sensors. These sensors are a kind of potentiometers which transform the accelerator pedal position into output voltage, and emit the voltage signal to the ECM. In addition, these sensors detect the opening and closing speed of the accelerator pedal and feed the voltage signals to the ECM. The ECM judges the current opening angle of the accelerator pedal from these signals and controls the throttle control motor based on these signals.

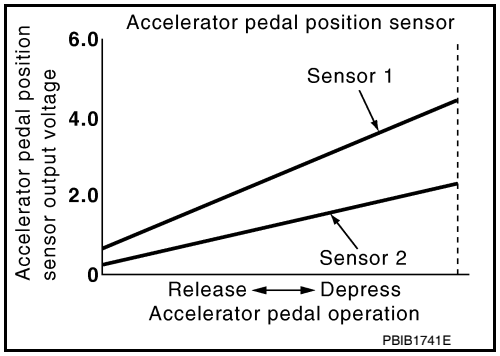

Idle position of the accelerator pedal is determined by the ECM receiving the signal from the accelerator pedal position sensor. The ECM uses this signal for the engine operation such as fuel cut.

On Board Diagnosis Logic

INFOID:0000000001528879

This self-diagnosis has the one trip detection logic.
NOTE:
If DTC P2138 is displayed with DTC P0643, first perform the trouble diagnosis for DTC P0643. Refer to EC-293 .

DTC No.	Trouble diagnosis name	DTC detecting condition	Possible cause
P2138 2138	Accelerator pedal position sensor circuit range/performance	Rationally incorrect voltage is sent to ECM compared with the signals from APP sensor 1 and APP sensor 2.	• Harness or connector (APP sensor 1 and 2 circuit is open or shorted.) (TP sensor circuit is shorted.) • Accelerator pedal position sensor 1 and 2 • Electric throttle control actuator (TP sensor)

FAIL-SAFE MODE

When the malfunction is detected, ECM enters fail-safe mode and the MIL lights up.

Engine operating condition in fail-safe mode
The ECM controls the electric throttle control actuator in regulating the throttle opening in order for the idle position to be within +10 degrees. The ECM regulates the opening speed of the throttle valve to be slower than the normal condition. So, the acceleration will be poor.

DTC Confirmation Procedure

INFOID:0000000001528880

NOTE:
If DTC Confirmation Procedure has been previously conducted, always turn ignition switch OFF and wait at least 10 seconds before conducting the next test.
TESTING CONDITION:
Before performing the following procedure, confirm that battery voltage is more than 8V at idle.

WITH CONSULT-III

1. Start engine and let it idle for 1 second.
2. Check DTC.
3. If DTC is detected, go to EC-382, "Diagnosis Procedure" .

WITH GST

Follow the procedure “WITH CONSULT-III” above.

Diagnosis Procedure

INFOID:0000000001528882

1. CHECK GROUND CONNECTIONS

1. Turn ignition switch OFF.
2. Loosen and retighten three ground screws on the body.
   Refer to EC-86, "Ground Inspection" .

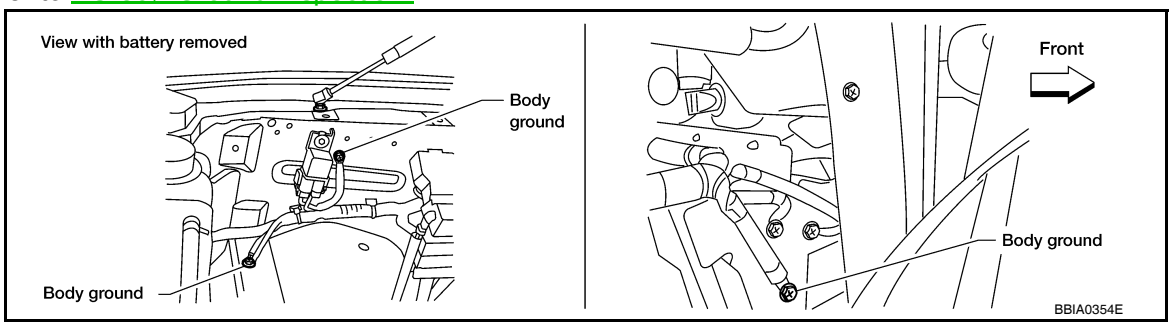

OK or NG

OK >> GO TO 2.
NG >> Repair or replace ground connections.

2. CHECK APP SENSOR 1 POWER SUPPLY CIRCUIT

1. Disconnect accelerator pedal position (APP) sensor harness connector.
2. Turn ignition switch ON.

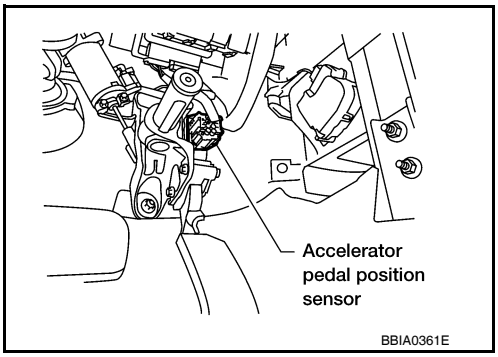

3. Check voltage between APP sensor terminal 7 and ground with CONSULT-III or tester.

Voltage: Approximately 5V

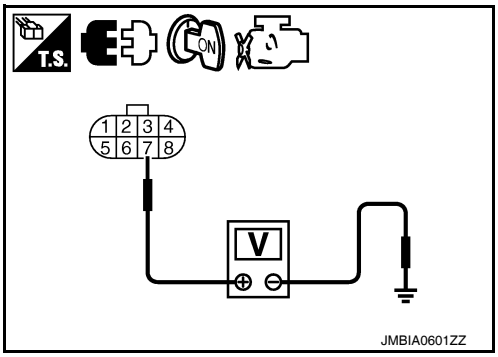

OK or NG

OK >> GO TO 3.
NG >> Repair open circuit or short to ground or short to power in harness or connectors.

3. CHECK APP SENSOR 2 POWER SUPPLY CIRCUIT-I

1. Turn ignition switch ON.
2. Check voltage between APP sensor terminal 6 and ground with CONSULT-III or tester.

Voltage: Approximately 5V

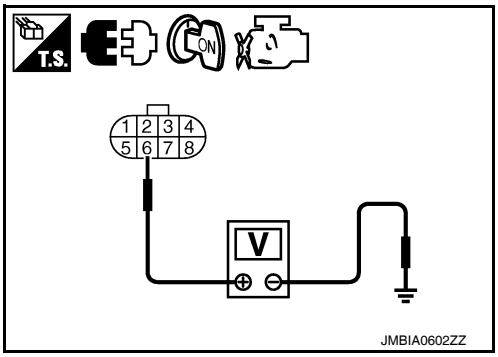

OK or NG

OK >> GO TO 8.
NG >> GO TO 4.

4. CHECK APP SENSOR 2 POWER SUPPLY CIRCUIT-II

1. Turn ignition switch OFF.
2. Disconnect ECM harness connector.
3. Check harness continuity between APP sensor terminal 6 and ECM terminal 91.
   Refer to Wiring Diagram.

Continuity should exist.

OK or NG

OK >> GO TO 5.
NG >> Repair open circuit in harness or connectors.

5. CHECK APP SENSOR 2 POWER SUPPLY CIRCUIT-III

Check harness for short to power and short to ground, between the following terminals

ECM terminal	Sensor terminal	Reference Wiring Diagram
47	Electric throttle control actuator terminal 2	EC-439, "Wiring Diagram - ENGINE CONTROL SYSTEM -"
91	APP sensor terminal 6	

OK or NG

OK >> GO TO 6.
NG >> Repair short to ground or short to power in harness connectors.

6. CHECK THROTTLE POSITION SENSOR

Refer to EC-380, "Component Inspection" .

OK or NG

OK >> GO TO 12.
NG >> GO TO 7.

7. REPLACE ELECTRIC THROTTLE CONTROL ACTUATOR

1. Replace the electric throttle control actuator.
2. Perform EC-18, "Throttle Valve Closed Position Learning" .
3. Perform EC-18, "Idle Air Volume Learning" .

>> **INSPECTION END**

8. CHECK APP SENSOR GROUND CIRCUIT FOR OPEN AND SHORT

1. Turn ignition switch OFF.
2. Disconnect ECM harness connector.
3. Check harness continuity between ECM terminal 82 and APP sensor terminal 1, ECM terminal 83 and APP sensor terminal 3.
   Refer to Wiring Diagram.

Continuity should exist.

4. Also check harness for short to ground and short to power.

OK or NG

OK >> GO TO 9.
NG >> Repair open circuit or short to ground or short to power in harness or connectors.

9. CHECK APP SENSOR INPUT SIGNAL CIRCUIT FOR OPEN AND SHORT

1. Check harness continuity between ECM terminal 106 and APP sensor terminal 2, ECM terminal 98 and APP sensor terminal 5.
   Refer to Wiring Diagram.

Continuity should exist.

2. Also check harness for short to ground and short to power.

OK or NG

OK >> GO TO 10.
NG >> Repair open circuit or short to ground or short to power in harness or connectors.

10. CHECK ACCELERATOR PEDAL POSITION SENSOR

Refer to EC-384, "Component Inspection" .

OK or NG

OK >> GO TO 12.
NG >> GO TO 11.

11. REPLACE ACCELERATOR PEDAL ASSEMBLY

1. Replace the accelerator pedal assembly.
2. Perform EC-18, "Accelerator Pedal Released Position Learning" .
3. Perform EC-18, "Throttle Valve Closed Position Learning" .
4. Perform EC-18, "Idle Air Volume Learning" .

>> **INSPECTION END**

12. CHECK INTERMITTENT INCIDENT

Refer to GI-35, "How to Check Terminal" and GI-38, "Intermittent Incident".

>> **INSPECTION END**

Component Inspection

INFOID:0000000001528883

ACCELERATOR PEDAL POSITION SENSOR

1. Reconnect all harness connectors disconnected.
2. Turn ignition switch ON.
3. Check voltage between ECM terminals 106 (APP sensor 1 signal), 98 (APP sensor 2 signal) and ground under the following conditions.

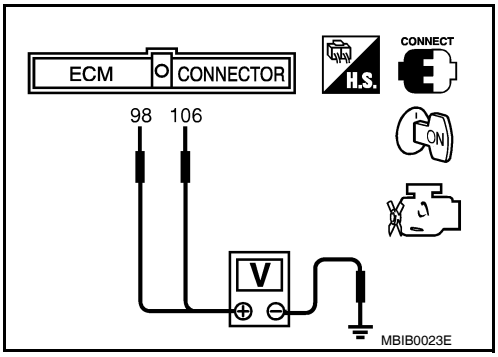

Terminal	Accelerator pedal	Voltage
106 (Accelerator pedal position sensor 1)	Fully released	0.5 - 1.0V
	Fully depressed	4.2 - 4.8V
98 (Accelerator pedal position sensor 2)	Fully released	0.25 - 0.5V
	Fully depressed	2.0 - 2.5V

4. If NG, replace accelerator pedal assembly and go to next step.
5. Perform EC-18, "Accelerator Pedal Released Position Learning" .
6. Perform EC-18, "Throttle Valve Closed Position Learning" .
7. Perform EC-18, "Idle Air Volume Learning" .

P2A00, P2A03 A/F SENSOR 1

Component Description

INFOID:0000000001365856

The air fuel ratio (A/F) sensor 1 is a planar one-cell limit current sensor. The sensor element of the A/F sensor 1 is composed an electrode layer, which transports ions. It has a heater in the element.
The sensor is capable of precise measurement λ = 1, but also in the lean and rich range. Together with its control electronics, the sensor outputs a clear, continuous signal throughout a wide λ range.
The exhaust gas components diffuse through the diffusion layer at the sensor cell. An electrode layer is applied voltage, and this current relative oxygen density in lean. Also this current relative hydrocarbon density in rich.
Therefore, the A/F sensor 1 is able to indicate air fuel ratio by this electrode layer of current. In addition, a heater is integrated in the sensor to ensure the required operating temperature of about 800°C (1,472°F).

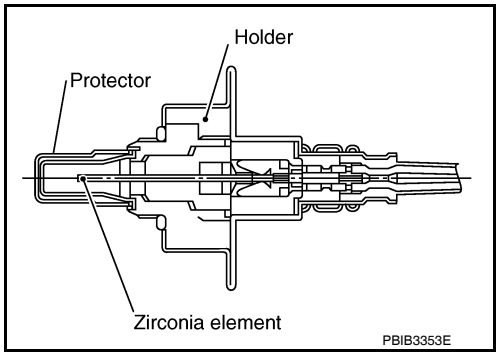

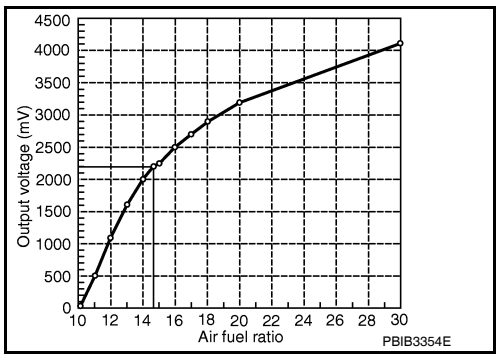

On Board Diagnosis Logic

INFOID:0000000001365858

To judge the malfunction, the A/F signal computed by ECM from the A/F sensor 1 signal is monitored not to be shifted to LEAN side or RICH side.

DTC No.	Trouble diagnosis name	DTC detecting condition	Possible Cause
P2A00 2A00 (Bank 1)	Air fuel ratio (A/F) sensor 1 circuit range/performance	• The output voltage computed by ECM from the A/F sensor 1 signal is shifted to the lean side for a specified period. • The A/F signal computed by ECM from the A/F sensor 1 signal is shifted to the rich side for a specified period.	• A/F sensor 1 • A/F sensor 1 heater • Fuel pressure • Fuel injector • Intake air leaks
P2A03 2A03 (Bank 2)			

DTC Confirmation Procedure

INFOID:0000000001365859

NOTE:
If DTC Confirmation Procedure has been previously conducted, always turn ignition switch OFF and wait at least 10 seconds before conducting the next test.
TESTING CONDITION:
Before performing the following procedure, confirm that battery voltage is more than 11V at idle.

WITH CONSULT-III

1. Start engine and warm it up to normal operating temperature.
2. Turn ignition switch OFF and wait at least 10 seconds.
3. Turn ignition switch ON and select “SELF-LEARNING CONT” in “WORK SUPPORT” mode with CONSULT-III.
4. Clear the self-learning coefficient by touching “CLEAR”.
5. Turn ignition switch OFF and wait at least 10 seconds.
6. Start engine and keep the engine speed between 3,500 and 4,000 rpm for 1 minute under no load.
7. Let engine idle for 1 minute.

8. Keep engine speed between 2,500 and 3,000 rpm for 20 minutes.
9. Check 1st trip DTC.
10. If 1st trip DTC is detected, go to EC-386, "Diagnosis Procedure".

WITH GST

1. Start engine and warm it up to normal operating temperature.
2. Turn ignition switch OFF and wait at least 10 seconds.
3. Disconnect mass air flow sensor harness connector.
4. Start engine and let it idle for at least 5 seconds.
5. Stop engine and reconnect mass air flow sensor harness connector.
6. Select Service $03 with GST and make sure that DTC P0102 is detected.
7. Select Service $04 with GST and erase the DTC P0102.
8. Start engine and keep the engine speed between 3,500 and 4,000 rpm for 1 minute under no load.
9. Let engine idle for 1 minute.
10. Keep engine speed between 2,500 and 3,000 rpm for 20 minutes.
11. Select Service $07 with GST.
    If 1st trip DTC is detected, go to EC-386, "Diagnosis Procedure".

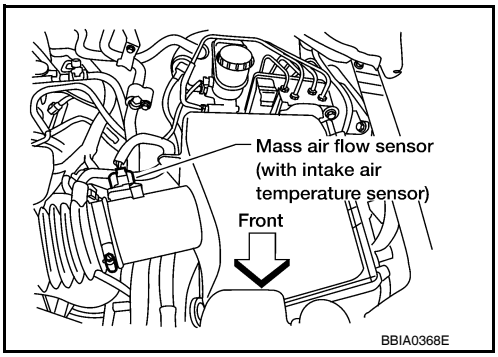

Diagnosis Procedure

INFOID:0000000001365861

1. CHECK GROUND CONNECTIONS

1. Turn ignition switch OFF.
2. Loosen and retighten two ground screws on the body.
   Refer to EC-86, "Ground Inspection".

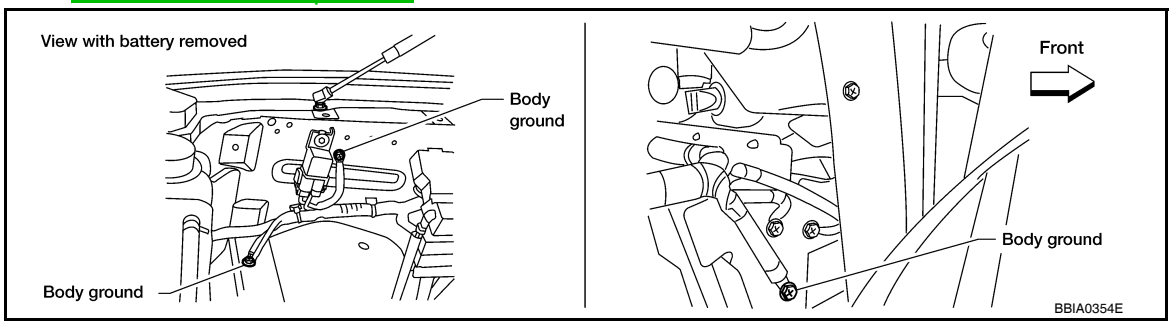

OK or NG

OK >> GO TO 2.
NG >> Repair or replace ground connections.

2. RETIGHTEN A/F SENSOR 1

1. Loosen and retighten the A/F sensor 1.

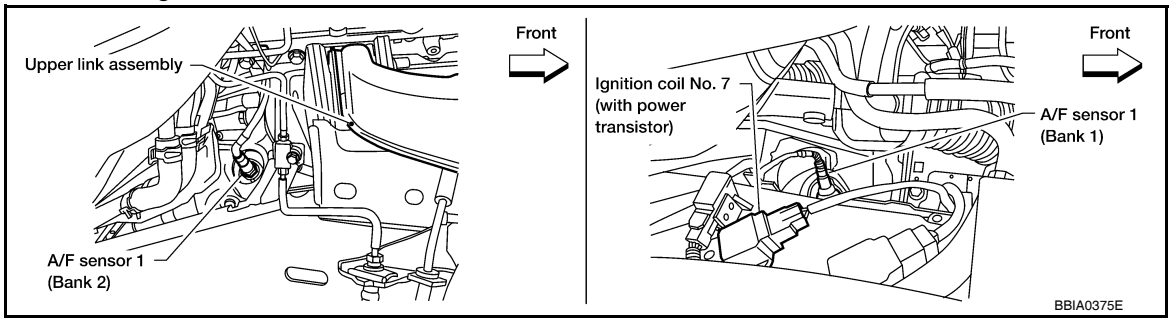

Tightening torque: 50 N-m (5.1 kg-m, 37 ft-lb)

>> GO TO 3.

3. CHECK FOR INTAKE AIR LEAK

1. Start engine and run it at idle.
2. Listen for an intake air leak after the mass air flow sensor.

OK or NG

OK >> GO TO 4.
NG >> Repair or replace.

4. CLEAR THE SELF-LEARNING DATA

With CONSULT-III

1. Start engine and warm it up to normal operating temperature.
2. Select “SELF-LEARNING CONT” in “WORK SUPPORT” mode with CONSULT-III.
3. Clear the self-learning control coefficient by touching “CLEAR”.
4. Run engine for at least 10 minutes at idle speed.
   Is the 1st trip DTC P0171, P0172, P0174 or P0175 detected?
   Is it difficult to start engine?

Without CONSULT-III

1. Start engine and warm it up to normal operating temperature.
2. Turn ignition switch OFF.
3. Disconnect mass air flow sensor harness connector.
4. Restart engine and let it idle for at least 5 seconds.
5. Stop engine and reconnect mass air flow sensor harness connector.
6. Make sure DTC P0102 is displayed.
7. Erase the DTC memory. Refer to EC-462, "DTC Index".
8. Make sure DTC P0000 is displayed.
9. Run engine for at least 10 minutes at idle speed.
   Is the 1st trip DTC P0171, P0172, P0174 or P0175 detected?
   Is it difficult to start engine?

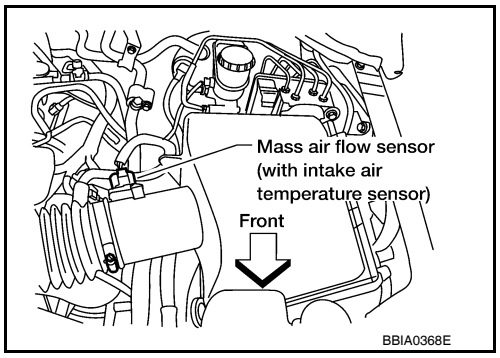

Yes or No

Yes >> Perform trouble diagnosis for DTC P0171, P0174 or P0172, P0175. Refer to EC-176 or EC-182.
No >> GO TO 5.

5. CHECK HARNESS CONNECTOR

1. Turn ignition switch OFF.
2. Disconnect A/F sensor 1 harness connector.

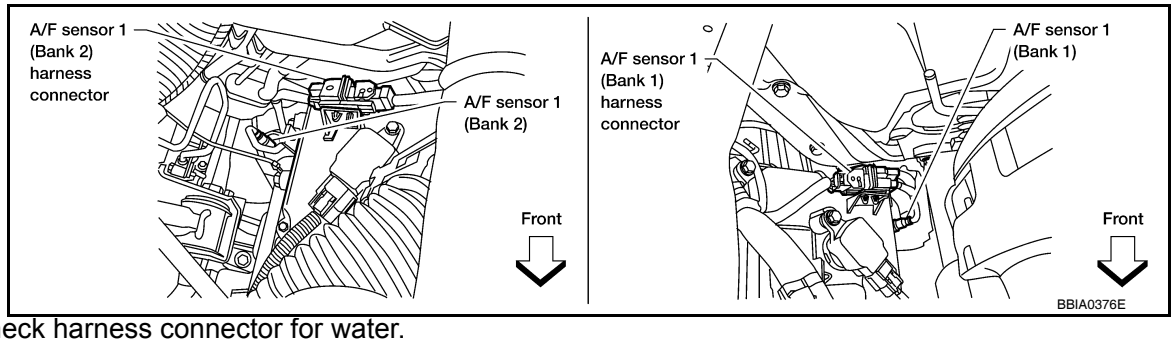

3. Check harness connector for water.

Water should not exit.

OK or NG

OK >> GO TO 6.
NG >> Repair or replace harness connector.

6. CHECK A/F SENSOR 1 POWER SUPPLY CIRCUIT

1. Turn ignition switch ON.
2. Check voltage between A/F sensor 1 terminal 4 and ground with CONSULT-III or tester.

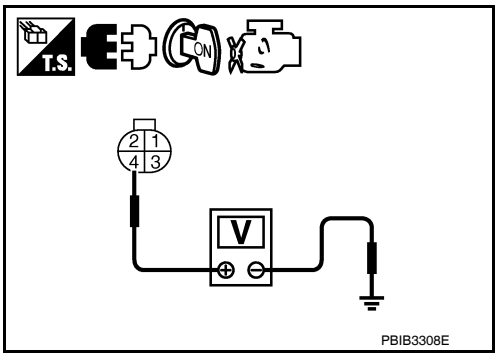

Voltage: Battery voltage

OK or NG

OK >> GO TO 8.
NG >> GO TO 7.

7. DETECT MALFUNCTIONING PART

Check the following.
- Harness connectors E5, F14
- IPDM E/R harness connector E119
- 15A fuse
- Harness for open or short between A/F sensor 1 and fuse

>> Repair or replace harness or connectors.

8. CHECK A/F SENSOR 1 INPUT SIGNAL CIRCUIT FOR OPEN AND SHORT

1. Turn ignition switch OFF.
2. Disconnect ECM harness connector.
3. Check harness continuity between A/F sensor 1 terminal and ECM terminal as follows. Refer to Wiring Diagram.

	A/F sensor 1 terminal	ECM terminal
Bank1	1	35
	2	56
Bank 2	1	16
	2	75

Continuity should exist.

4. Check harness continuity between the following terminals and ground. Refer to Wiring Diagram.

Bank 1		Bank 2	
A/F sensor 1 terminal	ECM terminal	A/F sensor 1 terminal	ECM terminal
1	35	1	16
2	56	2	75

Continuity should not exist.

5. Also check harness for short to power.

OK or NG

OK >> GO TO 9.
NG >> Repair open circuit or short to ground or short to power in harness or connectors.

9. CHECK A/F SENSOR 1 HEATER

Refer to EC-99, "Component Inspection".

OK or NG

OK >> GO TO 10.
NG >> GO TO 11.

10. CHECK INTERMITTENT INCIDENT

Perform GI-35, "How to Check Terminal" and GI-38, "Intermittent Incident".

OK or NG

OK >> GO TO 11.
NG >> Repair or replace.

11. REPLACE AIR FUEL RATIO (A/F) SENSOR 1

Replace malfunctioning air fuel ratio (A/F) sensor 1.

CAUTION:

- **Discard any A/F sensor which has been dropped from a height of more than 0.5 m (19.7 in) onto a hard surface such as a concrete floor; use a new one.**
- **Before installing new A/F sensor, clean exhaust system threads using Oxygen Sensor Thread Cleaner tool J-43897-18 or J-43897-12 and approved anti-seize lubricant.**

>> GO TO 12.

12. CONFIRM A/F ADJUSTMENT DATA

1. Turn ignition switch OFF and then ON.
2. Select “A/F ADJ-B1” and “” in “DATA MONITOR” mode with CONSULT-III.
3. Make sure that “0.000” is displayed on CONSULT-III screen.

OK or NG

OK >> INSPECTION END
NG >> GO TO 13.

13. CLEAR THE SELF-LEARNING DATA

With CONSULT-III

1. Start engine and warm it up to normal operating temperature.
2. Select “SELF-LEARNING CONT” in “WORK SUPPORT” mode with CONSULT-III.
3. Clear the self-learning control coefficient by touching “CLEAR”.

Without CONSULT-III

1. Start engine and warm it up to normal operating temperature.
2. Turn ignition switch OFF.
3. Disconnect mass air flow sensor harness connector.
4. Restart engine and let it idle for at least 5 seconds.
5. Stop engine and reconnect mass air flow sensor harness connector.
6. Make sure DTC P0102 is displayed.
7. Erase the DTC memory. Refer to EC-55, "Malfunction Indicator Lamp (MIL)".
8. Make sure DTC P0000 is displayed.

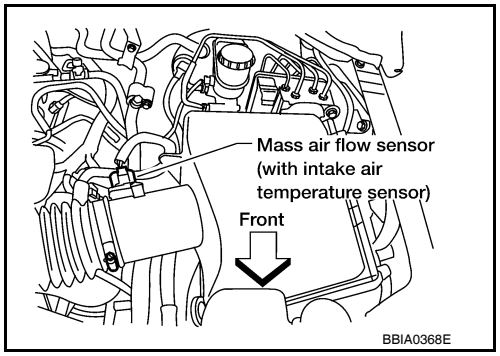

>> GO TO 14.

14. CONFIRM A/F ADJUSTMENT DATA

1. Turn ignition switch OFF and then ON.
2. Select “A/F ADJ-B1” and “A/F ADJ-B2” in “DATA MONITOR” mode with CONSULT-III.
3. Make sure that “0.000” is displayed on CONSULT-III screen.

>> **INSPECTION END**

ASCD BRAKE SWITCH

Component Description

INFOID:0000000001365863

When the brake pedal is depressed, ASCD brake switch is turned OFF and stop lamp switch is turned ON. ECM detects the state of the brake pedal by this input of two kinds (ON/OFF signal).
Refer to EC-33 for the ASCD function.

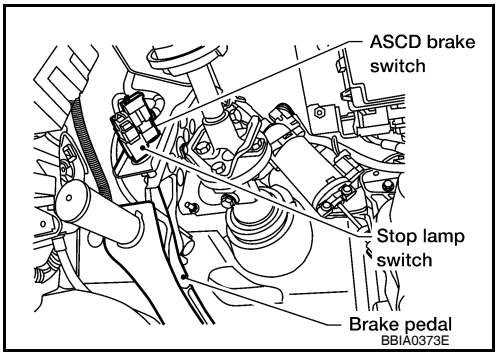

Diagnosis Procedure

INFOID:0000000001365866

1. CHECK OVERALL FUNCTION-I

With CONSULT-III

1. Turn ignition switch ON.
2. Select “BRAKE SW1” in “DATA MONITOR” mode with CONSULT-III.
3. Check “BRAKE SW1” indication under the following conditions.

CONDITION	INDICATION
Brake pedal: Slightly depressed	OFF
Brake pedal: Fully released	ON

Without CONSULT-III

1. Turn ignition switch ON.
2. Check voltage between ECM terminal 108 and ground under the following conditions.

CONDITION	VOLTAGE
Brake pedal: Slightly depressed	Approximately 0V
Brake pedal: Fully released	Battery voltage

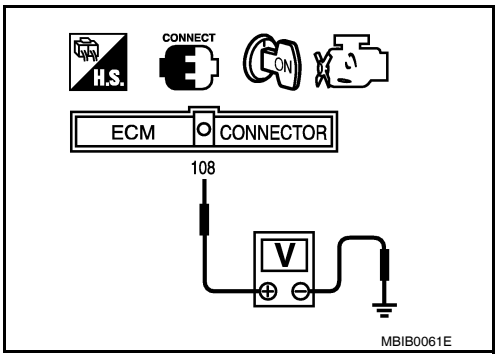

OK or NG

OK >> GO TO 2.
NG >> GO TO 3.

2. CHECK OVERALL FUNCTION-II

With CONSULT-III

Check “BRAKE SW2” indication in “DATA MONITOR” mode.

CONDITION	INDICATION
Brake pedal: Fully released	OFF
Brake pedal: Slightly depressed	ON

Without CONSULT-III

Check voltage between ECM terminal 101 and ground under the following conditions.

CONDITION	VOLTAGE
Brake pedal: Fully released	Approximately 0V
Brake pedal: Slightly depressed	Battery voltage

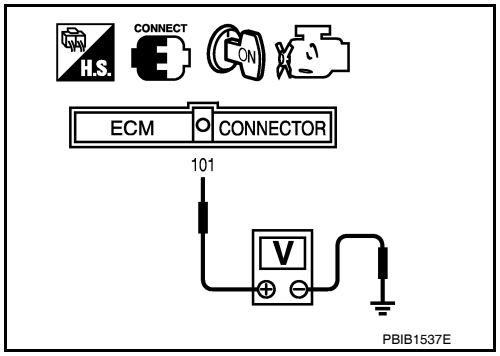

OK or NG

OK >> **INSPECTION END**
NG >> GO TO 7.

3. CHECK ASCD BRAKE SWITCH POWER SUPPLY CIRCUIT

1. Turn ignition switch OFF.
2. Disconnect ASCD brake switch harness connector.
3. Turn ignition switch ON.

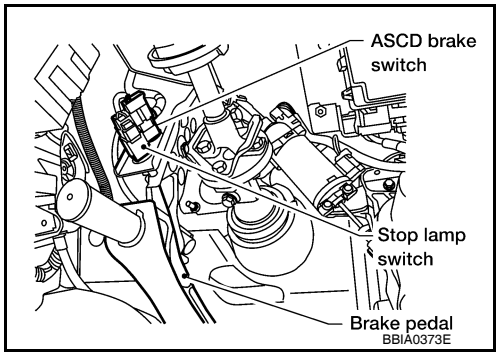

4. Check voltage between ASCD brake switch terminal 1 and ground with CONSULT-III or tester.

Voltage: Battery voltage

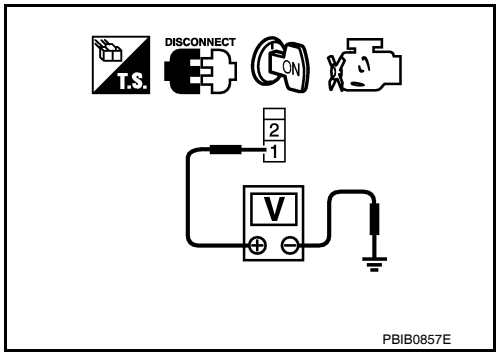

OK or NG

OK >> GO TO 5.
NG >> GO TO 4.

4. DETECT MALFUNCTIONING PART

Check the following.
- Harness connectors M31, E152
- Fuse block (J/B) connector M4
- 10A fuse
- Harness for open or short between ASCD brake switch and fuse

>> Repair open circuit or short to ground or short to power in harness or connectors.

5. CHECK ASCD BRAKE SWITCH INPUT SIGNAL CIRCUIT FOR OPEN AND SHORT

1. Turn ignition switch OFF.
2. Disconnect ECM harness connector.
3. Check harness continuity between ECM terminal 108 and ASCD brake switch terminal 2. Refer to Wiring Diagram.

Continuity should exist.

4. Also check harness for short to ground and short to power.

OK or NG

OK >> GO TO 6.
NG >> Repair open circuit or short to ground or short to power in harness or connectors.

6. CHECK ASCD BRAKE SWITCH

Refer to EC-393, "Component Inspection".

OK or NG

OK >> GO TO 11.
NG >> Replace ASCD brake switch.

7. CHECK STOP LAMP SWITCH POWER SUPPLY CIRCUIT

1. Turn ignition switch OFF.
2. Disconnect stop lamp switch harness connector.

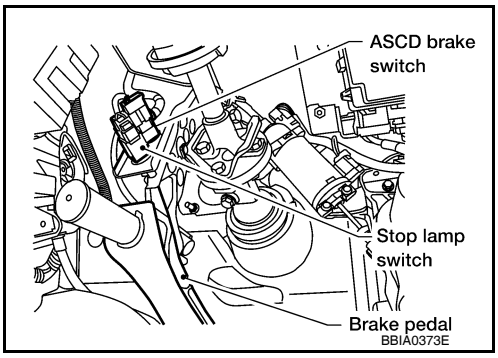

3. Check voltage between stop lamp switch terminal 3 and ground with CONSULT -III or tester.

Voltage: Battery voltage

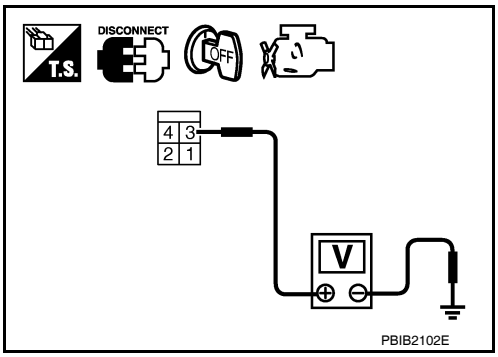

OK or NG

OK >> GO TO 9.
NG >> GO TO 8.

8. DETECT MALFUNCTIONING PART

Check the following.
- Harness connectors M31, E152
- Fuse block (J/B) connector M60
- 10A fuse
- Harness for open or short between stop lamp switch and battery

>> Repair open circuit or short to ground or short to power in harness or connectors.

9. CHECK STOP LAMP SWITCH INPUT SIGNAL CIRCUIT FOR OPEN AND SHORT

1. Disconnect ECM harness connector.
2. Check harness continuity between ECM terminal 101 and stop lamp switch terminal 4. Refer to Wiring Diagram.

Continuity should exist.

3. Also check harness for short to ground and short to power.

OK or NG

OK >> GO TO 10.
NG >> Repair open circuit or short to ground or short to power in harness or connectors.

10. CHECK STOP LAMP SWITCH

Refer to EC-393, "Component Inspection".

OK or NG

OK >> GO TO 11.
NG >> Replace stop lamp switch.

11. CHECK INTERMITTENT INCIDENT

Refer to GI-35, "How to Check Terminal" and GI-38, "Intermittent Incident".

>> **INSPECTION END**

Component Inspection

INFOID:0000000001365867

ASCD BRAKE SWITCH

1. Turn ignition switch OFF.
2. Disconnect ASCD brake switch harness connector.
3. Check harness continuity between ASCD brake switch terminals 1 and 2 under the following conditions.

Condition	Continuity
Brake pedal: Fully released	Should exist.
Brake pedal: Slightly depressed	Should not exist.

If NG, adjust ASCD brake switch installation, refer to BR-15, "Inspection and Adjustment", and perform step 3 again.

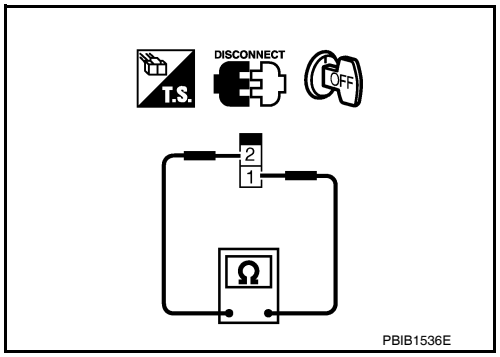

STOP LAMP SWITCH

1. Turn ignition switch OFF.
2. Disconnect stop lamp switch harness connector.
3. Check harness continuity between stop lamp switch terminals 3 and 4 under the following conditions.

Condition	Continuity
Brake pedal: Fully released	Should not exist.
Brake pedal: Slightly depressed	Should exist.

If NG, adjust stop lamp switch installation, refer to BR-15, "Inspection and Adjustment", and perform step 3 again.

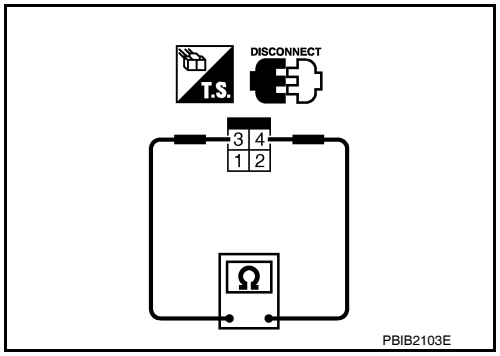

ASCD INDICATOR

Component Description

INFOID:0000000001365868

ASCD indicator lamp illuminates to indicate ASCD operation status. Lamp has two indicators, CRUISE and SET, and is integrated in combination meter.
CRUISE indicator illuminates when MAIN switch on ASCD steering switch is turned ON to indicate that ASCD system is ready for operation.
SET indicator illuminates when following conditions are met.
- CRUISE indicator is illuminated.
- SET/COAST switch on ASCD steering switch is turned ON while vehicle speed is within the range of ASCD setting.

SET indicator remains lit during ASCD control.
Refer to EC-33 for the ASCD function.

Diagnosis Procedure

INFOID:0000000001365871

1.CHECK OVERALL FUNCTION

Check ASCD indicator under the following conditions.

ASCD INDICATOR	CONDITION		SPECIFICATION
CRUISE LAMP	• Ignition switch: ON	• MAIN switch: Pressed at the 1st time → at the 2nd time	ON → OFF
SET LAMP	• MAIN switch: ON • When vehicle speed is between 40 km/h (25 MPH) and 144 km/h (89 MPH)	• ASCD: Operating	ON
		• ASCD: Not operating	OFF

OK or NG

OK >> **INSPECTION END**
NG >> GO TO 2.

2.CHECK DTC

Check that DTC U1000 or U1001 is not displayed.

OK or NG

OK >> GO TO 3.
NG >> Perform trouble diagnosis for DTC U1000, U1001. Refer to EC-87 .

3.CHECK COMBINATION METER FUNCTION

Refer to MWI-5.

OK or NG

OK >> GO TO 4.
NG >> Go to MWI-5.

4.CHECK INTERMITTENT INCIDENT

Refer to GI-35, "How to Check Terminal" and GI-38, "Intermittent Incident".

>> **INSPECTION END**

COOLING FAN

Diagnosis Procedure

INFOID:0000000001351874

1. CHECK POWER SUPPLY CIRCUIT

1. Turn ignition switch OFF.
2. Disconnect IPDM E/R harness connector E120.
3. Check voltage between IPDM E/R terminal 22 and ground with CONSULT-III or tester.

Voltage: Battery voltage

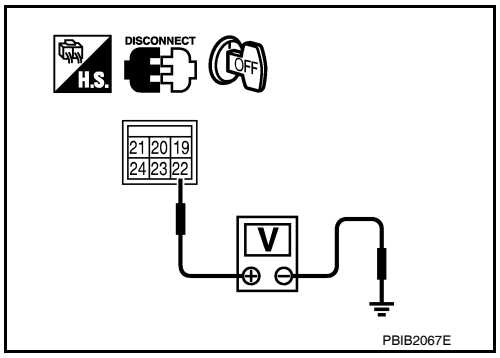

OK or NG

OK >> GO TO 3.
NG >> GO TO 2.

2. DETECT MALFUNCTIONING PART

Check the following.
- 40A fusible link (located in the fuse and fusible link box)
- 25A fusible link (located in the IPDM E/R box) (late production)
- Harness for open or short between IPDM E/R and battery

>> Repair open circuit or short to ground or short to power in harness or connectors.

3. CHECK COOLING FAN MOTOR CIRCUIT FOR OPEN OR SHORT

1. Disconnect cooling fan motor harness connector (1).
2. Check harness continuity between cooling fan motor terminal 1 and IPDM E/R terminal 24, cooling fan motor terminal 2 and ground.
   Refer to wiring diagram.

Continuity should exist.

3. Also check harness for short to ground and short to power.

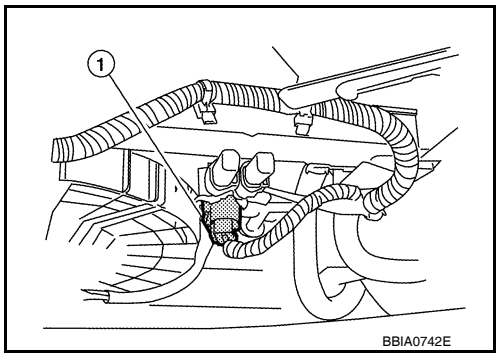

OK or NG

OK >> GO TO 4.
NG >> Repair open circuit or short to ground or short to power in harness or connectors.

4. CHECK COOLING FAN MOTOR

Refer to EC-395, "Component Inspection".

OK or NG

OK >> GO TO 5.
NG >> Replace cooling fan motor.

5. CHECK INTERMITTENT INCIDENT

Perform GI-35, "How to Check Terminal" and GI-38, "Intermittent Incident".

OK or NG

OK >> Replace IPDM E/R. Refer to PCS-34, "Removal and Installation of IPDM E/R".
NG >> Repair or replace harness connectors.

Component Inspection

INFOID:0000000001351875

COOLING FAN MOTOR

1. Disconnect cooling fan motor harness connector.

2. Supply cooling fan motor terminals with battery voltage and check operation.
   Cooling fan motor should operate.
   If NG, replace cooling fan motor.

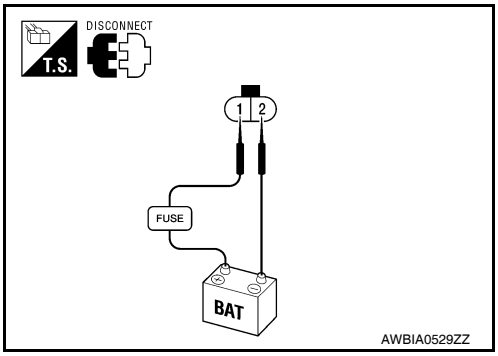

ELECTRICAL LOAD SIGNAL

Description

INFOID:0000000001365872

The electrical load signal (Headlamp switch signal, rear window defogger switch signal, etc.) is transferred through the CAN communication line from BCM to ECM via IPDM E/R.

Diagnosis Procedure

INFOID:0000000001365874

1. CHECK LOAD SIGNAL CIRCUIT OVERALL FUNCTION-I

1. Turn ignition switch ON.
2. Connect CONSULT-III and select “DATA MONITOR” mode.
3. Select “LOAD SIGNAL” and check indication under the following conditions.

Condition	Indication
Rear window defogger switch: ON	ON
Rear window defogger switch: OFF	OFF

OK or NG

OK >> GO TO 2.
NG >> GO TO 4.

2. CHECK LOAD SIGNAL CIRCUIT OVERALL FUNCTION-II

Check “LOAD SIGNAL” indication under the following conditions.

Condition	Indication
Lighting switch: ON at 2nd position	ON
Lighting switch: OFF	OFF

OK or NG

OK >> GO TO 3.
NG >> GO TO 5.

3. CHECK HEATER FAN SIGNAL CIRCUIT OVERALL FUNCTION

Select “HEATER FAN SW” and check indication under the following conditions.

Condition	Indication
Heater fan control switch: ON	ON
Heater fan control switch: OFF	OFF

OK or NG

OK >> **INSPECTION END**
NG >> GO TO 6.

4. CHECK REAR WINDOW DEFOGGER SYSTEM

Refer to DEF-4.

>> **INSPECTION END**

5. CHECK HEADLAMP SYSTEM

Refer to EXL-7, or EXL-9.

>> **INSPECTION END**

6. CHECK HEATER FAN CONTROL SYSTEM

Refer to HAC-49.

>> **INSPECTION END**

FUEL INJECTOR

Component Description

INFOID:0000000001365875

The fuel injector is a small, precise solenoid valve. When the ECM supplies a ground to the fuel injector circuit, the coil in the fuel injector is energized. The energized coil pulls the ball valve back and allows fuel to flow through the fuel injector into the intake manifold. The amount of fuel injected depends upon the injection pulse duration. Pulse duration is the length of time the fuel injector remains open. The ECM controls the injection pulse duration based on engine fuel needs.

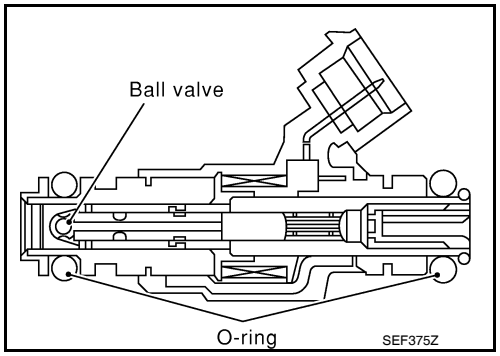

Diagnosis Procedure

INFOID:0000000001365878

1. INSPECTION START

Turn ignition switch to START.
Is any cylinder ignited?

Yes or No

Yes >> GO TO 2.
No >> GO TO 3.

2. CHECK OVERALL FUNCTION

With CONSULT-III

1. Start engine.
2. Perform “POWER BALANCE” in “ACTIVE TEST” mode with CONSULT-III.
3. Make sure that each circuit produces a momentary engine speed drop.

Without CONSULT-III

1. Start engine.
2. Listen to each fuel injector operating sound.
   Clicking noise should be heard.

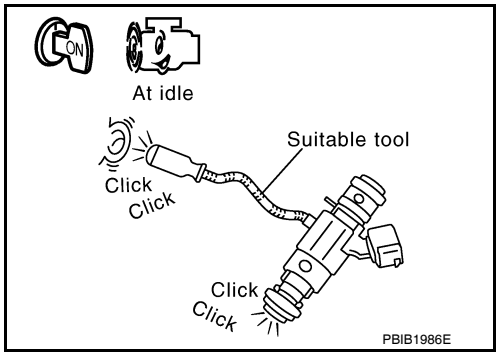

OK or NG

OK >> **INSPECTION END**
NG >> GO TO 3.

3. CHECK FUEL INJECTOR POWER SUPPLY CIRCUIT

1. Turn ignition switch OFF.

2. Disconnect fuel injector harness connector.

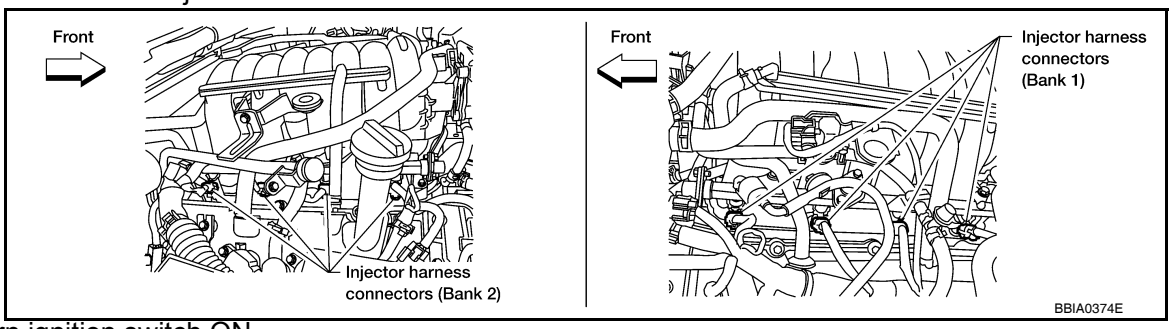

3. Turn ignition switch ON.
4. Check voltage between fuel injector terminal 1 and ground with CONSULT-III or tester.

Voltage: Battery voltage

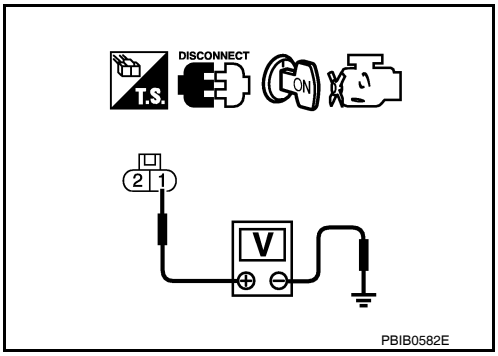

OK or NG

OK >> GO TO 5.
NG >> GO TO 4.

4. DETECT MALFUNCTIONING PART

Check the following.
- Harness connectors E2, F32
- IPDM E/R connector E119
- 15A fuse
- Harness for open or short between fuel injector and fuse

>> Repair harness or connectors.

5. CHECK FUEL INJECTOR OUTPUT SIGNAL CIRCUIT FOR OPEN AND SHORT

1. Turn ignition switch OFF.
2. Disconnect ECM harness connector.
3. Check harness continuity between fuel injector terminal 2 and ECM terminals 21, 22, 23, 40, 41, 42, 44, 63.
   Refer to Wiring Diagram.

Continuity should exist.

4. Also check harness for short to ground and short to power.

OK or NG

OK >> GO TO 6.
NG >> Repair open circuit or short to ground or short to power in harness or connectors.

6. CHECK FUEL INJECTOR

Refer to EC-401, "Component Inspection".

OK or NG

OK >> GO TO 7.
NG >> Replace malfunctioning fuel injector.

7. CHECK INTERMITTENT INCIDENT

Refer to GI-35, "How to Check Terminal" and GI-38, "Intermittent Incident".

>> **INSPECTION END**

Component Inspection

INFOID:0000000001365879

FUEL INJECTOR

1. Disconnect fuel injector harness connector.
2. Check resistance between terminals as shown in the figure.

Resistance: 11.1 - 14.5Ω [at 10 - 60°C (50 - 140°F)]

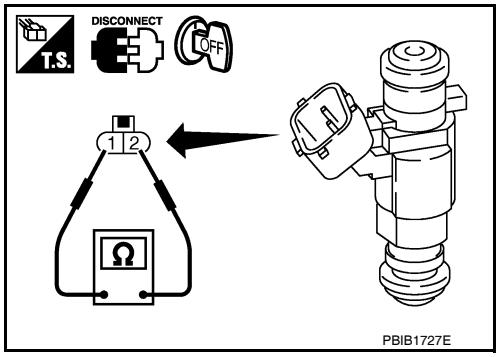

FUEL PUMP

Description

INFOID:0000000001365881

SYSTEM DESCRIPTION

Sensor	Input signal to ECM	ECM Function	Actuator
Crankshaft position sensor (POS) Camshaft position sensor (PHASE)	Engine speed*	Fuel pump control	Fuel pump relay
Battery	Battery voltage*		

*: ECM determines the start signal status by the signals of engine speed and battery voltage.

The ECM activates the fuel pump for several seconds after the ignition switch is turned ON to improve engine startability. If the ECM receives a engine speed signal from the camshaft position sensor (PHASE), it knows that the engine is rotating, and causes the pump to operate. If the engine speed signal is not received when the ignition switch is ON, the engine stalls. The ECM stops pump operation and prevents battery discharging, thereby improving safety. The ECM does not directly drive the fuel pump. It controls the ON/OFF fuel pump relay, which in turn controls the fuel pump.

Condition	Fuel pump operation
Ignition switch is turned to ON.	Operates for 1 second.
Engine running and cranking	Operates.
When engine is stopped	Stops in 1.5 seconds.
Except as shown above	Stops.

COMPONENT DESCRIPTION

A turbine type design fuel pump is used in the fuel tank.

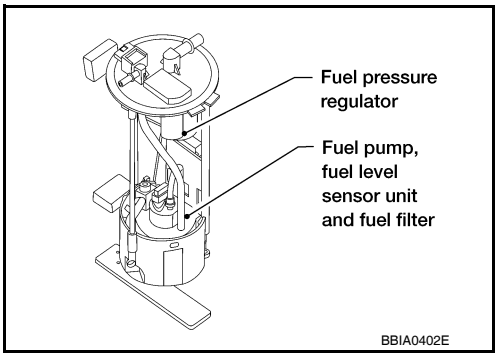

Diagnosis Procedure

INFOID:0000000001365884

1. CHECK OVERALL FUNCTION

1. Turn ignition switch ON.
2. Pinch fuel feed hose with two fingers.

Fuel pressure pulsation should be felt on the fuel feed hose for 1 second after ignition switch is turned ON.

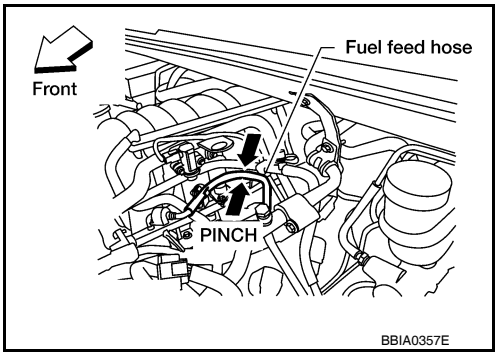

OK or NG

OK >> **INSPECTION END**
NG >> GO TO 2.

2. CHECK FUEL PUMP POWER SUPPLY CIRCUIT-I

1. Turn ignition switch OFF.
2. Disconnect ECM harness connector.
3. Turn ignition switch ON.

4. Check voltage between ECM terminal 113 and ground with CONSULT-III or tester.

Voltage: Battery voltage

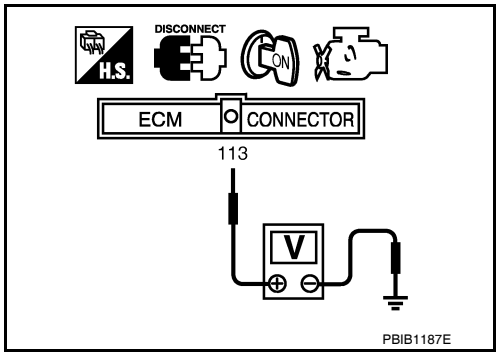

OK or NG

OK >> GO TO 5.
NG >> GO TO 3.

3. CHECK FUEL PUMP POWER SUPPLY CIRCUIT-II

Check voltage between IPDM E/R terminal 46 and ground with CONSULT-III or tester.

Voltage: Battery voltage

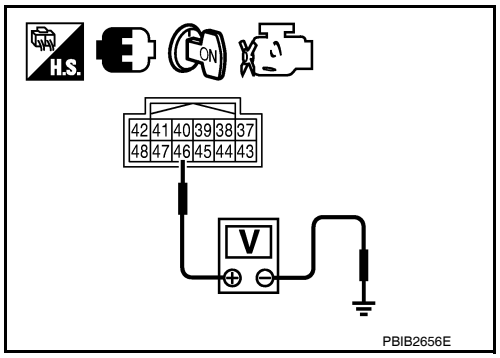

OK or NG

OK >> GO TO 4.
NG >> GO TO 13.

4. DETECT MALFUNCTIONING PART

Check harness for open or short between IPDM E/R and ECM.

>> Repair harness or connectors.

5. CHECK CONDENSER-2 POWER SUPPLY CIRCUIT

1. Turn ignition switch OFF.
2. Reconnect all harness connectors disconnected.
3. Disconnect condenser-2 harness connector.
4. Turn ignition switch ON.

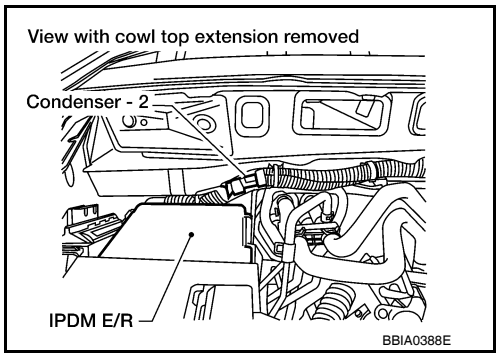

5. Check voltage between condenser-2 terminal 1 and ground with CONSULT-III or tester.

Voltage: Battery voltage should exist for 1 second after ignition switch is turned ON.

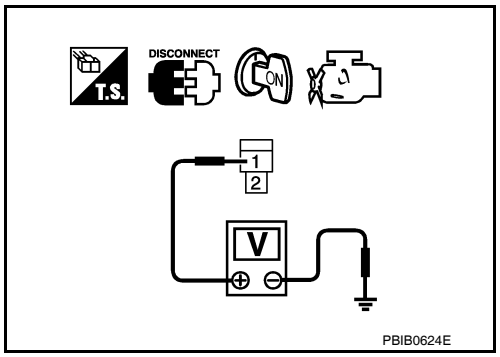

6. Also check harness for short to ground and short to power.

OK or NG

OK >> GO TO 8.
NG >> GO TO 6.

6. CHECK 15A FUSE

1. Turn ignition switch OFF.

2. Disconnect 15A fuse.
3. Check 15A fuse.

OK or NG

OK >> GO TO 7.
NG >> Replace fuse.

7. CHECK CONDENSER-2 POWER SUPPLY CIRCUIT-II FOR OPEN AND SHORT

1. Disconnect IPDM E/R harness connector E119.
2. Check harness continuity between IPDM E/R terminal 13 and condenser-2 terminal 1.
   Refer to Wiring Diagram.

   Continuity should exist.

3. Also check harness for short to ground and short to power.

OK or NG

OK >> GO TO 13.
NG >> Repair open circuit or short to ground or short to power in harness or connectors.

8. CHECK CONDENSER-2 GROUND CIRCUIT FOR OPEN AND SHORT

1. Check harness continuity between condenser-2

   + terminal 2 and ground.
   Refer to Wiring Diagram.

   Continuity should exist.

2. Also check harness for short to power.

OK or NG

OK >> GO TO 9.
NG >> Repair open circuit or short to power in harness or connectors.

9. CHECK CONDENSER-2

Refer to EC-405, "Component Inspection".

OK or NG

OK >> GO TO 10.
NG >> Replace condenser-2.

10. CHECK FUEL PUMP POWER SUPPLY AND GROUND CIRCUIT FOR OPEN AND SHORT

1. Turn ignition switch OFF.
2. Disconnect “fuel level sensor unit and fuel pump” harness connector.
3. Disconnect IPDM E/R harness connector E119.
4. Check harness continuity between IPDM E/R terminal 13 and “fuel level sensor unit and fuel pump” terminal 1, “fuel level sensor unit and fuel pump” terminal 3 and ground.
   Refer to Wiring Diagram.

   Continuity should exist.

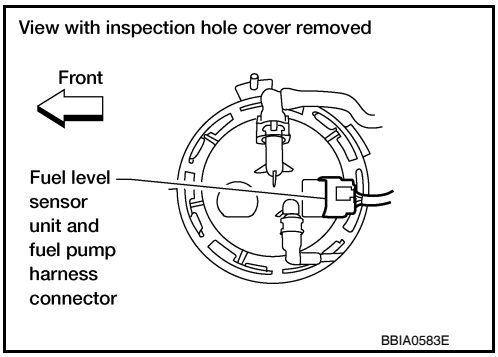

5. Also check harness for short to ground and short to power.

OK or NG

OK >> GO TO 12.
NG >> GO TO 11.

11. DETECT MALFUNCTIONING PART

Check the following.
- Harness connectors E41, C1
- Harness for open or short between fuel pump and IPDM E/R
- Harness for open or short between fuel pump and ground

>> Repair open circuit or short to ground or short to power in harness or connectors.

12. CHECK FUEL PUMP

Refer to EC-405, "Component Inspection".

OK or NG

OK >> GO TO 13.
NG >> Replace “fuel level sensor unit and fuel pump”.

13. CHECK INTERMITTENT INCIDENT

Refer to GI-35, "How to Check Terminal" and GI-38, "Intermittent Incident".

OK or NG

OK >> Replace IPDM E/R.
NG >> Repair or replace harness or connectors.

Component Inspection

INFOID:0000000001365885

FUEL PUMP

1. Disconnect “fuel level sensor unit and fuel pump” harness connector.
2. Check resistance between fuel level sensor unit and fuel pump terminals 1 and 3.

Resistance: 0.2 - 5.0Ω [at 25°C (77°F)]

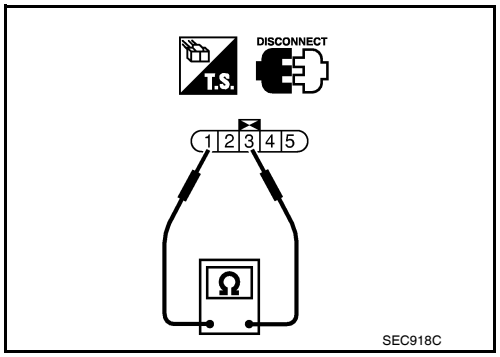

CONDENSER-2

1. Turn ignition switch OFF.
2. Disconnect condenser-2 harness connector.
3. Check resistance between condenser-2 terminals as 1 and 2.

Resistance	Above 1 MΩ at 25°C (77°F)

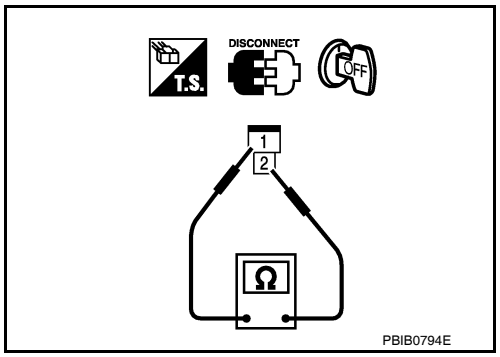

ICC BRAKE SWITCH

Component Description

INFOID:0000000001365887

When depress on the brake pedal, ICC brake switch is turned OFF and stop lamp switch is turned ON. ECM detects the state of the brake pedal by this input of two kinds (ON/OFF signal)
Refer to CCS-13 for the ICC function.

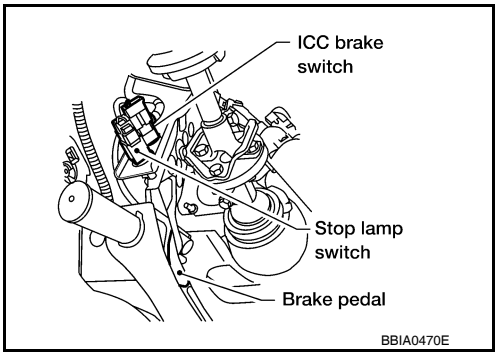

Diagnosis Procedure

INFOID:0000000001365890

1. CHECK OVERALL FUNCTION-I

With CONSULT-III

1. Turn ignition switch ON.
2. Select “BRAKE SW1” in “DATA MONITOR” mode with CONSULT-III.
3. Check “BRAKE SW1” indication under the following conditions.

CONDITION	INDICATION
Brake pedal: Slightly depressed	OFF
Brake pedal: Fully released	ON

Without CONSULT-III

1. Turn ignition switch ON.
2. Check voltage between ECM terminal 108 and ground under the following conditions.

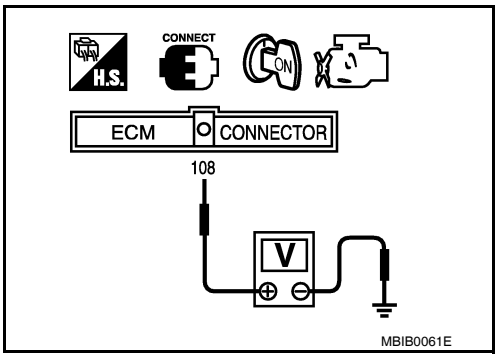

CONDITION	VOLTAGE
Brake pedal: Slightly depressed	Approximately 0V
Brake pedal: Fully released	Battery voltage

OK or NG

OK >> GO TO 2.
NG >> GO TO 3.

2. CHECK OVERALL FUNCTION-II

With CONSULT-III

Check “BRAKE SW2” indication in “DATA MONITOR” mode.

CONDITION	INDICATION
Brake pedal: Fully released	OFF
Brake pedal: Slightly depressed	ON

Without CONSULT-III

Check voltage between ECM terminal 101 and ground under the following conditions.

CONDITION	VOLTAGE
Brake pedal: Fully released	Approximately 0V
Brake pedal: Slightly depressed	Battery voltage

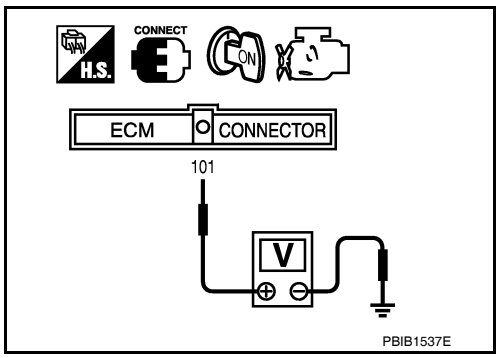

OK or NG

OK >> **INSPECTION END**
NG >> GO TO 10.

3. CHECK DTC WITH ICC UNIT

Refer to CCS-18.

OK or NG

OK >> GO TO 4.
NG >> Repair or replace.

4. CHECK ICC BRAKE HOLD RELAY POWER SUPPLY CIRCUIT

1. Turn ignition switch OFF.
2. Disconnect ICC brake hold relay.
3. Turn ignition switch ON.

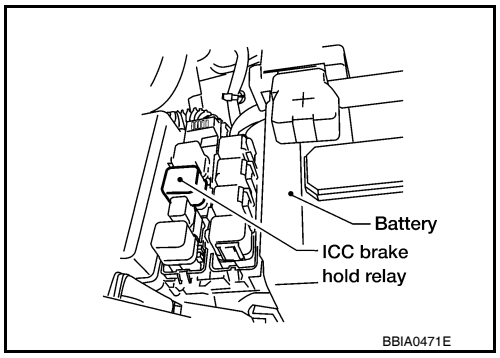

4. Check voltage between ICC brake hold relay terminal 4 and ground with CONSULT-III or tester.

Voltage: Battery voltage

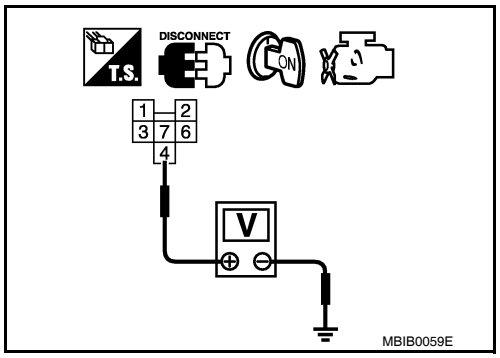

OK or NG

OK >> GO TO 6.
NG >> GO TO 5.

5. DETECT MALFUNCTIONING PART

Check the following.
- Harness connectors M31, E152
- Fuse block (J/B) connector M4
- 10A fuse
- Harness for open or short between ICC brake hold relay and fuse

>> Repair open circuit or short to ground or short to power in harness or connectors.

6. CHECK ICC BRAKE SWITCH POWER SUPPLY CIRCUIT

1. Turn ignition switch OFF.
2. Disconnect ICC brake switch harness connector.
3. Check harness continuity between ICC brake hold relay terminal 3 and ICC brake switch terminal 1.
   Refer to Wiring Diagram.

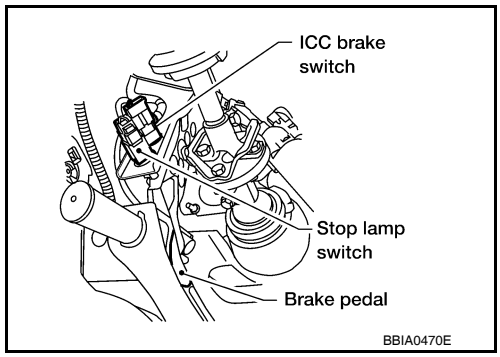

Continuity should exist.

4. Also check harness for short to ground and short to power.

OK or NG

OK >> GO TO 7.
NG >> Repair open circuit or short to ground or short to power in harness or connectors.

7. CHECK ICC BRAKE SWITCH INPUT SIGNAL CIRCUIT FOR OPEN AND SHORT

1. Disconnect ECM harness connector.
2. Check harness continuity between ICC brake switch terminal 2 and ECM terminal 108.
   Refer Wiring Diagram.

Continuity should exist.

3. Also check harness for short to ground and short to power.

OK or NG

OK >> GO TO 8.
NG >> Repair open circuit or short to ground or short to power in harness or connectors.

8. CHECK ICC BRAKE HOLD RELAY

Refer to EC-409, "Component Inspection".

OK >> GO TO 9.
NG >> Replace ICC brake hold relay.

9. CHECK ICC BRAKE SWITCH

Refer to EC-409, "Component Inspection".

OK or NG

OK >> GO TO 14.
NG >> Replace ICC brake switch.

10. CHECK STOP LAMP SWITCH POWER SUPPLY CIRCUIT

1. Turn ignition switch OFF.
2. Disconnect stop lamp switch harness connector.

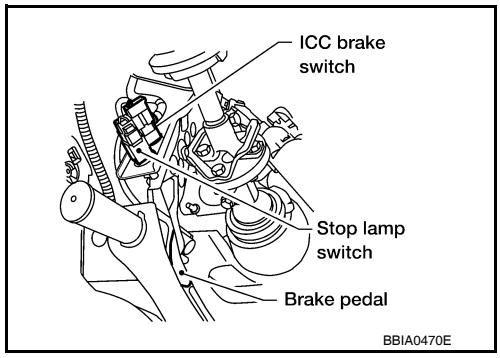

3. Check voltage between stop lamp switch terminal 3 and ground with CONSULT -III or tester.

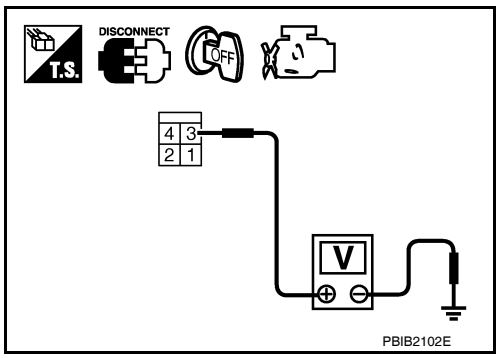

Voltage: Battery voltage

OK or NG

OK >> GO TO 12.
NG >> GO TO 11.

11. DETECT MALFUNCTIONING PART

Check the following.
- Harness connectors M31, E152
- Fuse block (J/B) No. 1 connector M60
- 10A fuse
- Harness for open or short between stop lamp switch and battery

>> Repair open circuit or short to ground or short to power in harness or connectors.

12. CHECK STOP LAMP SWITCH INPUT SIGNAL CIRCUIT FOR OPEN AND SHORT

1. Disconnect ECM harness connector.
2. Check harness continuity between ECM terminal 101 and stop lamp switch terminal 4. Refer to Wiring Diagram.

Continuity should exist.

3. Also check harness for short to ground and short to power.

OK or NG

OK >> GO TO 13.
NG >> Repair open circuit or short to ground or short to power in harness or connectors.

13. CHECK STOP LAMP SWITCH

Refer to EC-409, "Component Inspection".

OK or NG

OK >> GO TO 14.
NG >> Replace stop lamp switch.

14. CHECK INTERMITTENT INCIDENT

Refer to GI-35, "How to Check Terminal" and GI-38, "Intermittent Incident".

>> **INSPECTION END**

Component Inspection

INFOID:0000000001365891

ICC BRAKE SWITCH

1. Turn ignition switch OFF.
2. Disconnect ICC brake switch harness connector.

3. Check continuity between ICC brake switch terminals 1 and 2 under the following conditions.

Condition	Continuity
Brake pedal: Fully released.	Should exist.
Brake pedal: Slightly depressed.	Should not exist.

If NG, adjust ICC brake switch installation, refer to BR-15, "Inspection and Adjustment" , and perform step 3 again.

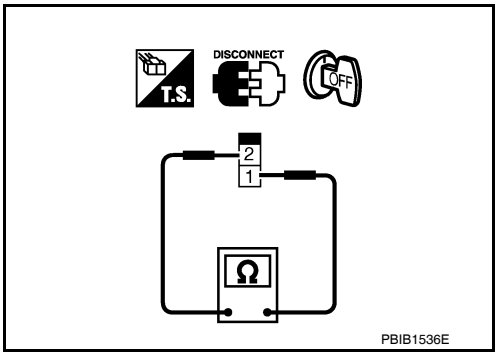

STOP LAMP SWITCH

1. Turn ignition switch OFF.
2. Disconnect stop lamp switch harness connector.
3. Check continuity between stop lamp switch terminals 3 and 4 under the following conditions.

Condition	Continuity
Brake pedal: Fully released.	Should not exist.
Brake pedal: Slightly depressed.	Should exist.

If NG, adjust stop lamp switch installation, refer to BR-15, "Inspection and Adjustment", and perform step 3 again.

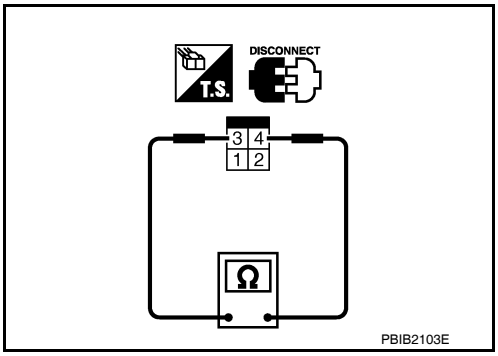

ICC BRAKE HOLD RELAY

1. Apply 12V direct current between ICC brake hold relay terminals 1 and 2.
2. Check continuity between relay terminals 3 and 4, 6 and 7 under the following conditions.

Condition	Between terminals	Continuity
12V direct current supply between terminals 1 and 2	3 and 4	Should not exist
	6 and 7	Should exist
No current supply	3 and 4	Should exist
	6 and 7	Should not exist

3. If NG, replace ICC brake hold relay.

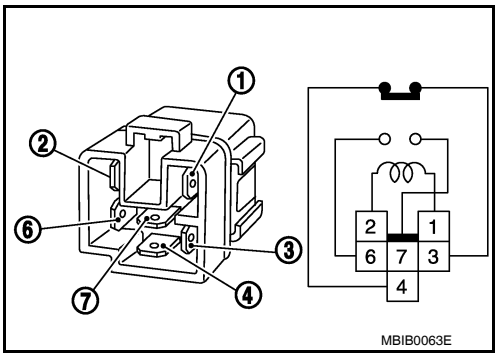

IGNITION SIGNAL

Component Description

INFOID:0000000001365892

IGNITION COIL & POWER TRANSISTOR

The ignition signal from the ECM is sent to and amplified by the power transistor. The power transistor turns ON and OFF the ignition coil primary circuit. This ON/OFF operation induces the proper high voltage in the coil secondary circuit.

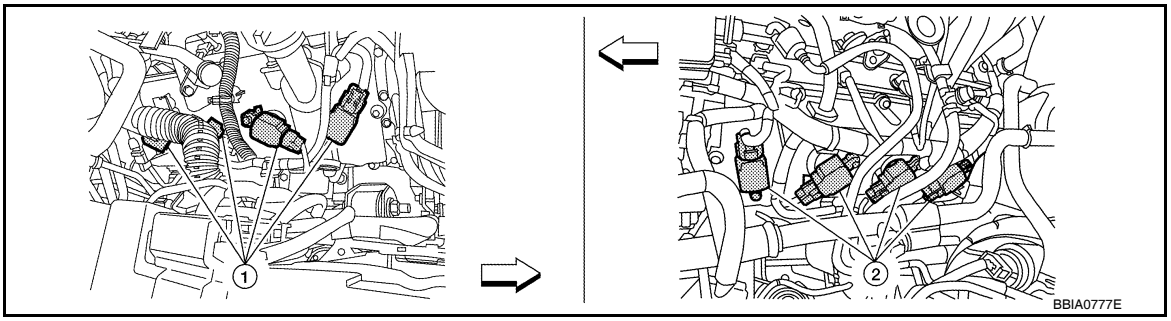

1. Ignition coils (with power transistor) (bank 2)
2. Ignition coils (with power transistor) (bank 1)

Diagnosis Procedure

INFOID:0000000001365894

1. CHECK ENGINE START

Turn ignition switch OFF, and restart engine.
Is engine running?

Yes or No

Yes (With CONSULT-III)>>GO TO 2.
Yes (Without CONSULT-III)>>GO TO 3.
No >> GO TO 4.

2. CHECK OVERALL FUNCTION

With CONSULT-III

1. Perform “POWER BALANCE” in “ACTIVE TEST” mode with CONSULT-III.
2. Make sure that each circuit produces a momentary engine speed drop.

OK or NG

OK >> **INSPECTION END**
NG >> GO TO 10.

3. CHECK OVERALL FUNCTION

Without CONSULT-III

1. Let engine idle.
2. Read the voltage signal between ECM terminals 46, 60, 61, 62, 65, 79, 80, 81 and ground with an oscilloscope.
3. Verify that the oscilloscope screen shows the signal wave as shown below.
   NOTE:
   The pulse cycle changes depending on rpm at idle.

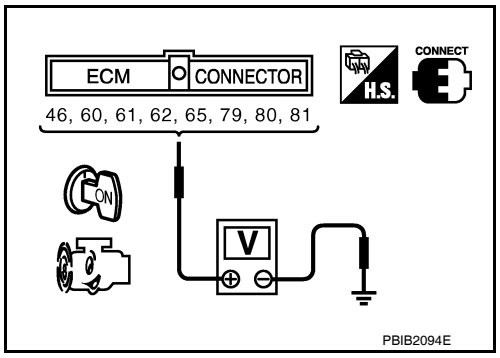

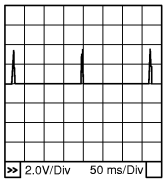

OK or NG

OK >> **INSPECTION END**
NG >> GO TO 10.

4. CHECK IGNITION COIL POWER SUPPLY CIRCUIT-I

1. Turn ignition switch OFF, wait at least 10 seconds and then turn ON.
2. Check voltage between ECM terminals 119, 120 and ground with CONSULT-III or tester.

Voltage: Battery voltage

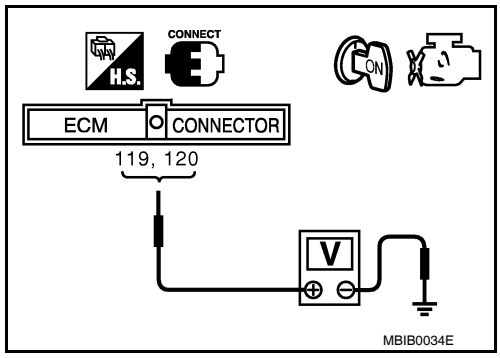

OK or NG

OK >> GO TO 5.
NG >> Go to EC-83.

5. CHECK IGNITION COIL POWER SUPPLY CIRCUIT-II

1. Turn ignition switch OFF.
2. Disconnect condenser-1 harness connector.
3. Turn ignition switch ON.

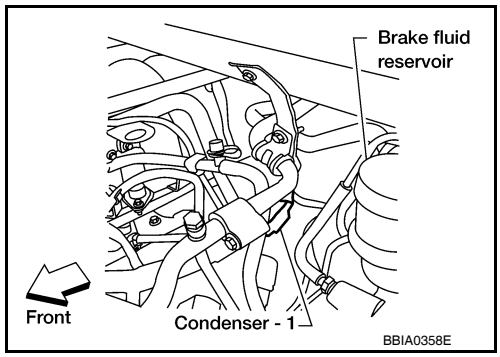

4. Check voltage between condenser-1 terminal 1 and ground with CONSULT-III or tester.

Voltage: Battery voltage

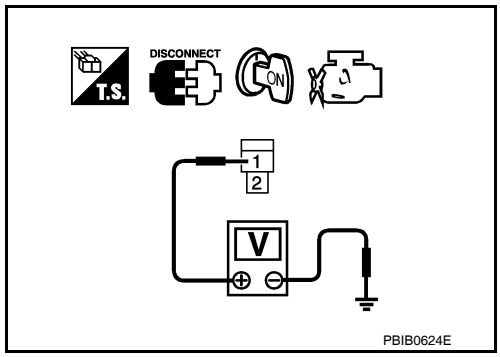

OK or NG

OK >> GO TO 8.
NG >> GO TO 6.

6. CHECK IGNITION COIL POWER SUPPLY CIRCUIT-III

1. Turn ignition switch OFF.
2. Disconnect IPDM E/R connector E119.
3. Check harness continuity between IPDM E/R terminal 4 and condenser-1 terminal 1. Refer to Wiring Diagram.

Continuity should exist.

4. Also check harness for short to ground and short to power.

OK or NG

OK >> Go to EC-83.
NG >> GO TO 7.

7. DETECT MALFUNCTIONING PART

Check the following.
- Harness connectors E2, F32

- Harness for open or short between condenser-1 and IPDM E/R

>> Repair open circuit or short to ground or short to power in harness or connectors.

8. CHECK CONDENSER-1 GROUND CIRCUIT FOR OPEN AND SHORT

1. Turn ignition switch OFF.
2. Check harness continuity between condenser-1 terminal 2 and ground.
   Refer to Wiring Diagram.

Continuity should exist.

3. Also check harness for short to power.

OK or NG

OK >> GO TO 9.
NG >> Repair open circuit or short to power in harness or connectors.

9. CHECK CONDENSER-1

Refer to EC-414, "Component Inspection".

OK or NG

OK >> GO TO 10.
NG >> Replace condenser-1.

10. CHECK IGNITION COIL POWER SUPPLY CIRCUIT-IV

1. Turn ignition switch OFF.
2. Reconnect all harness connectors disconnected.
3. Disconnect ignition coil harness connector.

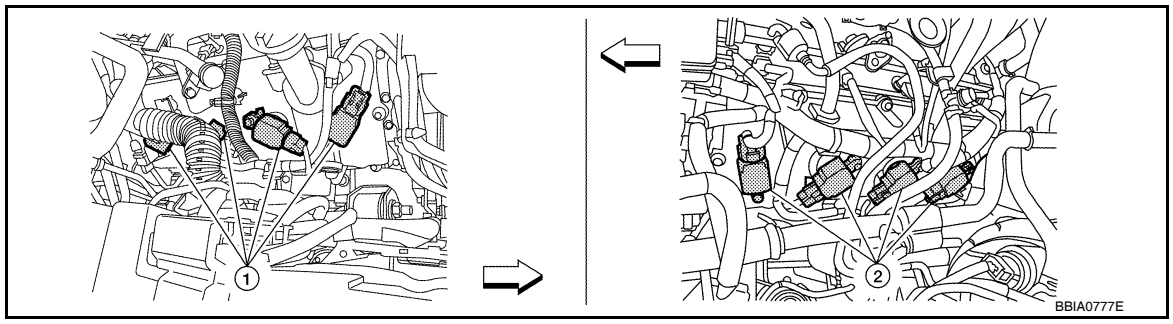

1. Ignition coils (with power transistor) (bank 2)
2. Ignition coils (with power transistor) (bank 1)

4. Turn ignition switch ON.
5. Check voltage between ignition coil terminal 3 and ground with CONSULT-III or tester.

Voltage: Battery voltage

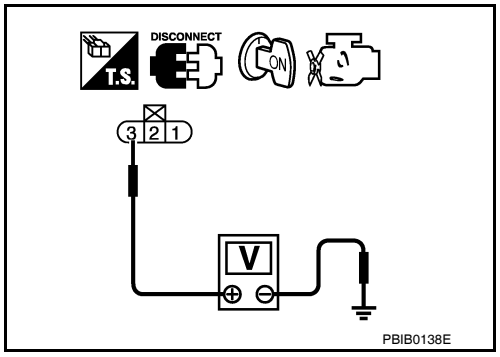

OK or NG

OK >> GO TO 12.
NG >> GO TO 11.

11. DETECT MALFUNCTIONING PART

Check the following.
- Harness connectors E2, F32
- Harness for open or short between ignition coil and harness connector F32

>> Repair or replace harness or connectors.

12. CHECK IGNITION COIL GROUND CIRCUIT FOR OPEN AND SHORT

1. Turn ignition switch OFF.
2. Check harness continuity between ignition coil terminal 2 and ground.
   Refer to Wiring Diagram.

Continuity should exist.

3. Also check harness for short to power.

OK or NG

OK >> GO TO 13.
NG >> Repair open circuit or short to power in harness or connectors.

13. CHECK IGNITION COIL OUTPUT SIGNAL CIRCUIT FOR OPEN AND SHORT

1. Disconnect ECM harness connector.
2. Check harness continuity between ECM terminals 46, 60, 61, 62, 65, 79, 80, 81 and ignition coil terminal 1.
   Refer to Wiring Diagram.

Continuity should exist.

3. Also check harness for short to ground and short to power.

OK or NG

OK >> GO TO 14.
NG >> Repair open circuit or short to ground or short to power in harness or connectors.

14. CHECK IGNITION COIL WITH POWER TRANSISTOR

Refer to EC-414, "Component Inspection".

OK or NG

OK >> GO TO 15.
NG >> Replace ignition coil with power transistor.

15. CHECK INTERMITTENT INCIDENT

Refer to GI-35, "How to Check Terminal" and GI-38, "Intermittent Incident".

>> **INSPECTION END**

Component Inspection

INFOID:0000000001365895

IGNITION COIL WITH POWER TRANSISTOR

CAUTION:

Do the following procedure in the place where ventilation is good without the combustible.

1. Turn ignition switch OFF.
2. Disconnect ignition coil harness connector.
3. Check resistance between ignition coil terminals as follows.

Terminal No. (Polarity)	Resistance Ω [at 25°C (77°F)]
1 and 2	Except 0 or ∞
1 and 3	Except 0
2 and 3	

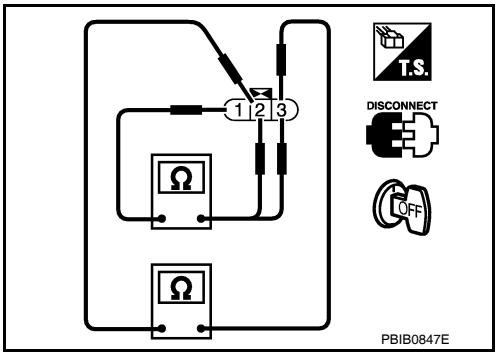

4. If NG, replace ignition coil with power transistor.
   If OK, go to next step.
5. Turn ignition switch OFF.
6. Reconnect all harness connectors disconnected.

7. Remove fuel pump fuse in IPDM E/R to release fuel pressure.
   NOTE:
   Do not use CONSULT-III to release fuel pressure, or fuel pressure applies again during the following procedure.
8. Start engine.
9. After engine stalls, crank it two or three times to release all fuel pressure.
10. Turn ignition switch OFF.
11. Remove all ignition coil harness connectors to avoid the electrical discharge from the ignition coils.
12. Remove ignition coil and spark plug of the cylinder to be checked.

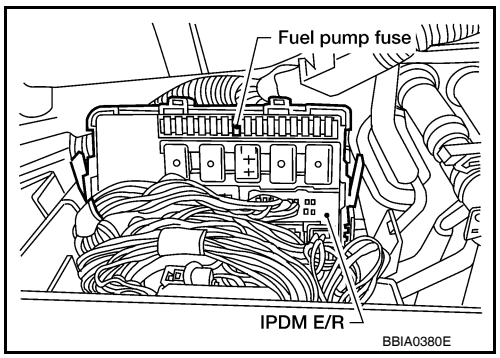

13. Crank engine for 5 seconds or more to remove combustion gas in the cylinder.
14. Connect spark plug and harness connector to ignition coil.
15. Fix ignition coil using a rope etc. with gap of 13 - 17 mm between the edge of the spark plug and grounded metal portion as shown in the figure.
16. Crank engine for about 3 seconds, and check whether spark is generated between the spark plug and the grounded metal portion.

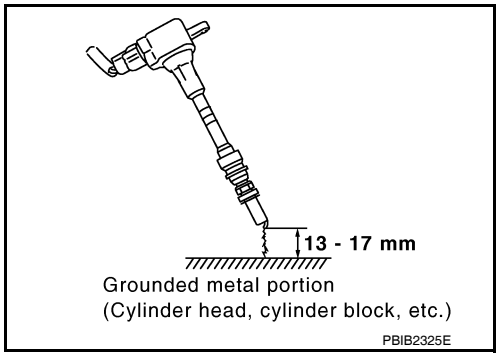

Spark should be generated.

CAUTION:
- **Do not approach to the spark plug and the ignition coil within 50cm. Be careful not to get an electrical shock while checking, because the electrical discharge voltage becomes 20kV or more.**
- **It might cause to damage the ignition coil if the gap of more than 17 mm is taken.**

NOTE:
When the gap is less than 13 mm, the spark might be generated even if the coil is malfunctioning.

17. If NG, replace ignition coil with power transistor.

CONDENSER-1

1. Turn ignition switch OFF.
2. Disconnect condenser-1 harness connector.
3. Check resistance between condenser-1 terminals 1 and 2.

Resistance	Above 1 MΩ at 25°C (77°F)

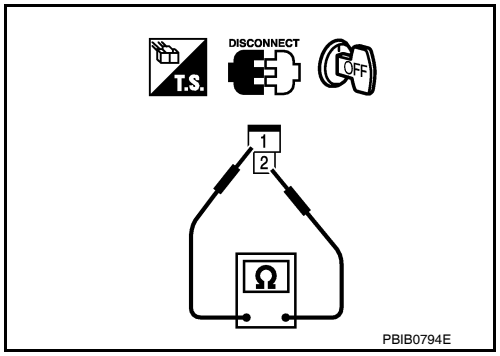

ON BOARD REFUELING VAPOR RECOVERY (ORVR)

System Description

INFOID:0000000001351317

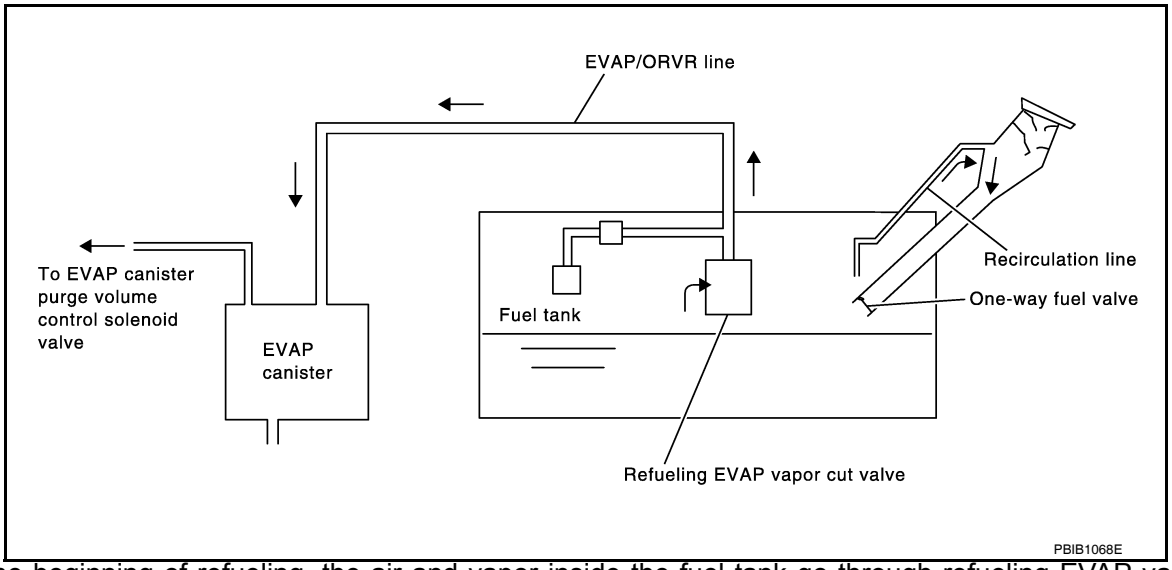

From the beginning of refueling, the air and vapor inside the fuel tank go through refueling EVAP vapor cut valve and EVAP/ORVR line to the EVAP canister. The vapor is absorbed by the EVAP canister and the air is released to the atmosphere.
When the refueling has reached the full level of the fuel tank, the refueling EVAP vapor cut valve is closed and refueling is stopped because of auto shut-off. The vapor which was absorbed by the EVAP canister is purged during driving.

WARNING:
When conducting inspections below, be sure to observe the following:
- **Put a "CAUTION: FLAMMABLE" sign in workshop.**
- **Do not smoke while servicing fuel system. Keep open flames and sparks away from work area.**
- **Be sure to furnish the workshop with a CO_2 fire extinguisher.**

CAUTION:
- **Before removing fuel line parts, carry out the following procedures:**
- **Put drained fuel in an explosion-proof container and put lid on securely.**
- **Release fuel pressure from fuel line. Refer to EC-494, "Fuel Pressure Check" .**
- **Disconnect battery ground cable.**
- **Always replace O-ring when the fuel gauge retainer is removed.**
- **Do not kink or twist hose and tube when they are installed.**
- **Do not tighten hose and clamps excessively to avoid damaging hoses.**
- **After installation, run engine and check for fuel leaks at connection.**
- **Do not attempt to top off the fuel tank after the fuel pump nozzle shuts off automatically. Continued refueling may cause fuel overflow, resulting in fuel spray and possibly a fire.**

Diagnosis Procedure

INFOID:0000000001351318

SYMPTOM: FUEL ODOR FROM EVAP CANISTER IS STRONG.

1. CHECK EVAP CANISTER

1. Remove EVAP canister with EVAP canister vent control valve and EVAP control system pressure sensor attached.
2. Weigh the EVAP canister with EVAP canister vent control valve and EVAP control system pressure sensor attached.
   The weight should be less than 2.5 kg (5.5 lb).

OK or NG

OK >> GO TO 2.
NG >> GO TO 3.

2. CHECK IF EVAP CANISTER SATURATED WITH WATER

Does water drain from the EVAP canister?

Yes or No

Yes >> GO TO 3.
No >> GO TO 5.

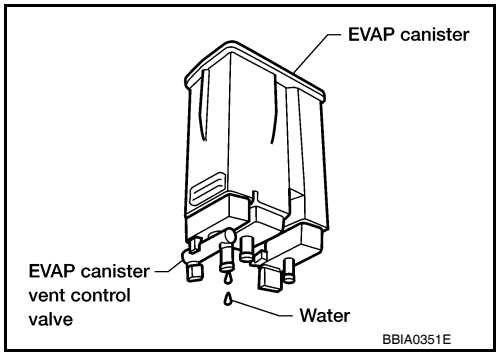

3. REPLACE EVAP CANISTER

Replace EVAP canister with a new one.

>> GO TO 4.

4. DETECT MALFUNCTIONING PART

Check the EVAP hose between EVAP canister and vehicle frame for clogging or poor connection.

>> Repair or replace EVAP hose.

5. CHECK REFUELING EVAP VAPOR CUT VALVE

Refer to EC-418, "Component Inspection" .

OK or NG

OK >> **INSPECTION END**
NG >> Replace refueling EVAP vapor cut valve with fuel tank.

SYMPTOM: CANNOT REFUEL/FUEL ODOR FROM THE FUEL FILLER OPENING IS STRONG WHILE REFUELING.

1. CHECK EVAP CANISTER

1. Remove EVAP canister with EVAP canister vent control valve and EVAP control system pressure sensor attached.
2. Weigh the EVAP canister with EVAP canister vent control valve and EVAP control system pressure sensor attached.
   The weight should be less than 2.5 kg (5.5 lb).

OK or NG

OK >> GO TO 2.
NG >> GO TO 3.

2. CHECK IF EVAP CANISTER SATURATED WITH WATER

Does water drain from the EVAP canister?

Yes or No

Yes >> GO TO 3.
No >> GO TO 5.

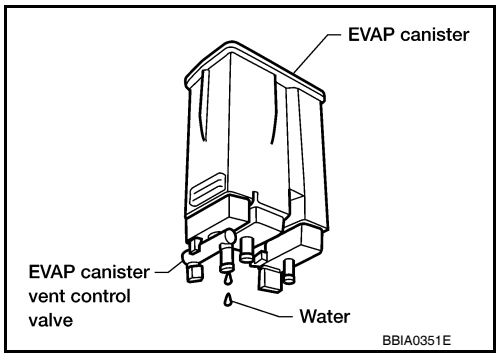

3. REPLACE EVAP CANISTER

Replace EVAP canister with a new one.

>> GO TO 4.

4. DETECT MALFUNCTIONING PART

Check the EVAP hose between EVAP canister and vehicle frame for clogging or poor connection.

>> Repair or replace EVAP hose.

5. CHECK VENT HOSES AND VENT TUBES

Check hoses and tubes between EVAP canister and refueling EVAP vapor cut valve for clogging, kink, looseness and improper connection.

OK or NG

OK >> GO TO 6.
NG >> Repair or replace hoses and tubes.

6. CHECK FILLER NECK TUBE

Check recirculation line for clogging, dents and cracks.

OK or NG

OK >> GO TO 7.
NG >> Replace filler neck tube.

7. CHECK REFUELING EVAP VAPOR CUT VALVE

Refer to EC-418, "Component Inspection" .

OK or NG

OK >> GO TO 8.
NG >> Replace refueling EVAP vapor cut valve with fuel tank.

8. CHECK FUEL FILLER TUBE

Check filler neck tube and hose connected to the fuel tank for clogging, dents and cracks.

OK or NG

OK >> GO TO 9.
NG >> Replace fuel filler tube.

9. CHECK ONE-WAY FUEL VALVE-I

Check one-way valve for clogging.

OK or NG

OK >> GO TO 10.
NG >> Repair or replace one-way fuel valve with fuel tank.

10. CHECK ONE-WAY FUEL VALVE-II

1. Make sure that fuel is drained from the tank.
2. Remove fuel filler tube and hose.
3. Check one-way fuel valve for operation as follows.
   When a stick is inserted, the valve should open, when removing stick it should close.
   Do not drop any material into the tank.

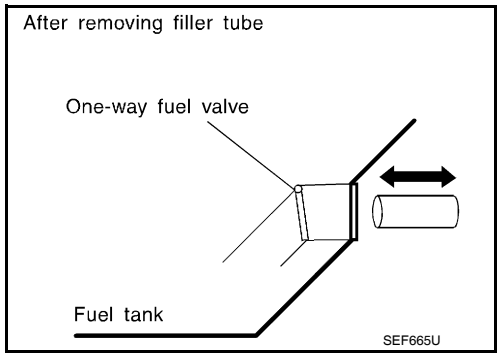

OK or NG

OK >> **INSPECTION END**
NG >> Replace fuel filler tube or replace one-way fuel valve with fuel tank.

Component Inspection

INFOID:0000000001351319

REFUELING EVAP VAPOR CUT VALVE

With CONSULT-III

1. Remove fuel tank. Refer to FL-11, "Removal and Installation".

2. Drain fuel from the tank as follows:
a. Remove fuel feed hose located on the fuel gauge retainer.
b. Connect a spare fuel hose, one side to fuel gauge retainer where the hose was removed and the other side to a fuel container.
c. Drain fuel using “FUEL PUMP RELAY” in “ACTIVE TEST” mode with CONSULT-III.
3. Check refueling EVAP vapor cut valve for being stuck to close as follows.
Blow air into the refueling EVAP vapor cut valve (from the end of EVAP/ORVR line hose), and check that the air flows freely into the tank.
4. Check refueling EVAP vapor cut valve for being stuck to open as follows.
a. Connect vacuum pump to hose end.
b. Remove fuel gauge retainer with fuel gauge unit.
Always replace O-ring with new one.
c. Put fuel tank upside down.
d. Apply vacuum pressure to hose end [–13.3 kPa (–100 mmHg, –3.94 inHg)] with fuel gauge retainer remaining open and check that the pressure is applicable.

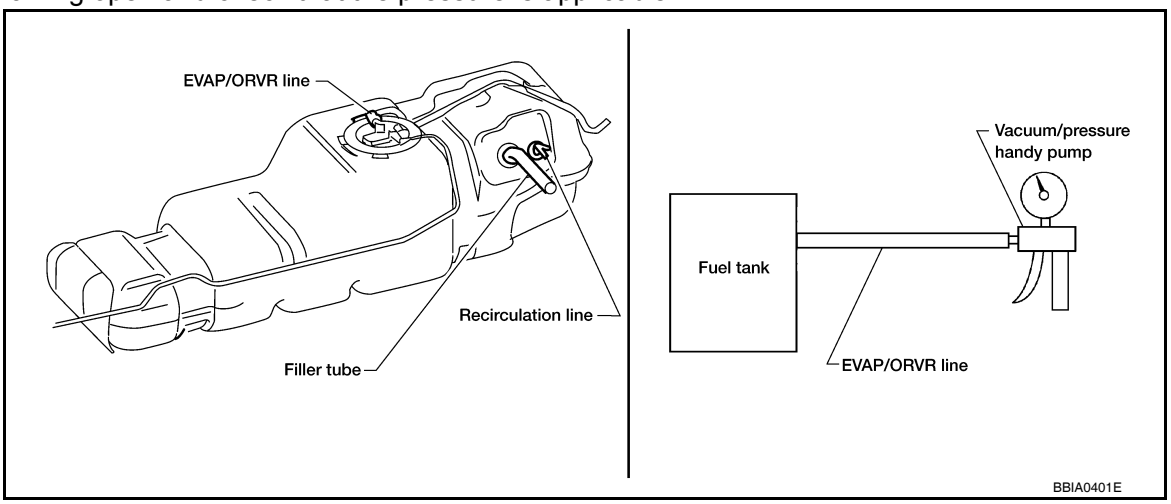

Without CONSULT-III
1. Remove fuel tank. Refer to FL-11, "Removal and Installation".
2. Drain fuel from the tank as follows:
a. Remove fuel gauge retainer.
b. Drain fuel from the tank using a handy pump into a fuel container.
3. Check refueling EVAP vapor cut valve for being stuck to close as follows.
Blow air into the refueling EVAP vapor cut valve (from the end of EVAP/ORVR line hose), and check that the air flows freely into the tank.
4. Check refueling EVAP vapor cut valve for being stuck to open as follows.
a. Connect vacuum pump to hose end.
b. Remove fuel gauge retainer with fuel gauge unit.
Always replace O-ring with new one.
c. Put fuel tank upside down.

d. Apply vacuum pressure to hose end [–13.3 kPa (–100 mmHg, –3.94 inHg)] with fuel gauge retainer remaining open and check that the pressure is applicable.

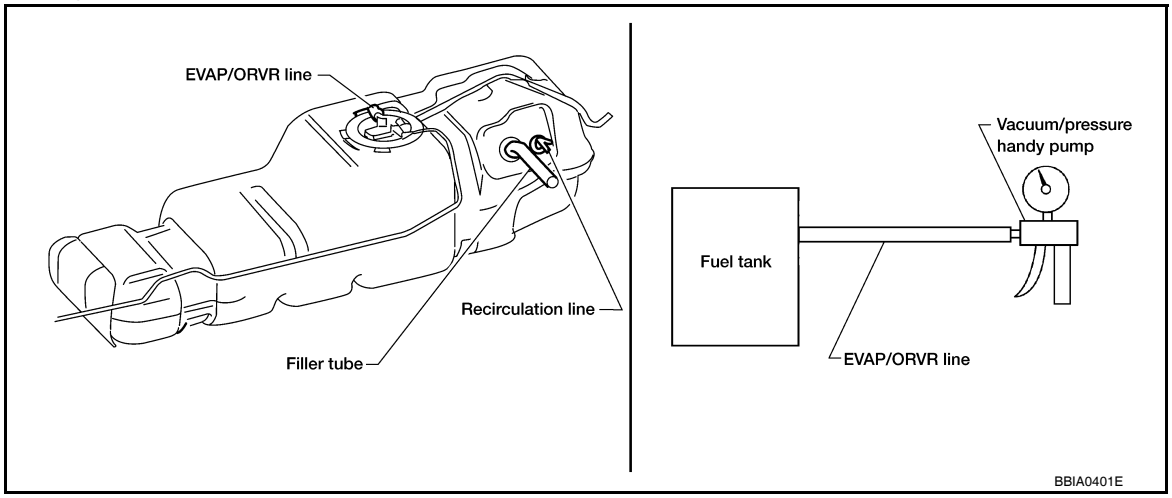

POSITIVE CRANKCASE VENTILATION

Description

INFOID:0000000001351320

SYSTEM DESCRIPTION

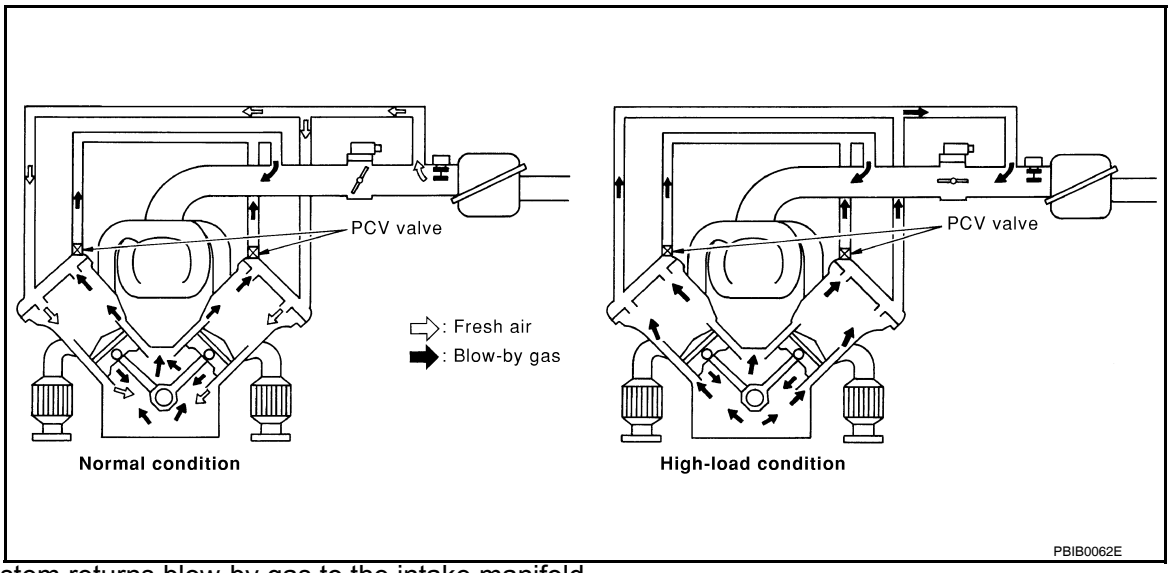

This system returns blow-by gas to the intake manifold.
The positive crankcase ventilation (PCV) valve is provided to conduct crankcase blow-by gas to the intake manifold. During partial throttle operation of the engine, the intake manifold sucks the blow-by gas through the PCV valve. Normally, the capacity of the valve is sufficient to handle any blow-by and a small amount of ventilating air. The ventilating air is then drawn from the air inlet tubes into the crankcase. In this process the air passes through the hose connecting air inlet tubes to rocker cover. Under full-throttle condition, the manifold vacuum is insufficient to draw the blow-by flow through the valve. The flow goes through the hose connection in the reverse direction.
On vehicles with an excessively high blow-by, the valve does not meet the requirement. This is because some of the flow will go through the hose connection to the air inlet tubes under all conditions.

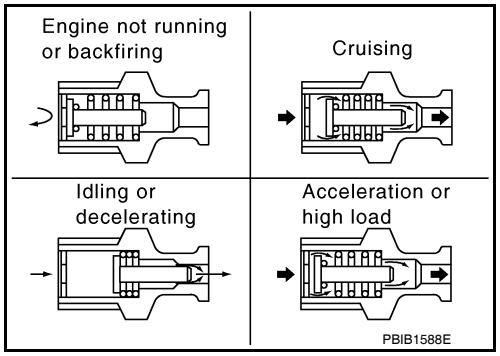

Component Inspection

INFOID:0000000001351321

PCV (POSITIVE CRANKCASE VENTILATION) VALVE

With engine running at idle, remove PCV valve from rocker cover. A properly working valve makes a hissing noise as air passes through it. A strong vacuum should be felt immediately when a finger is placed over valve inlet.

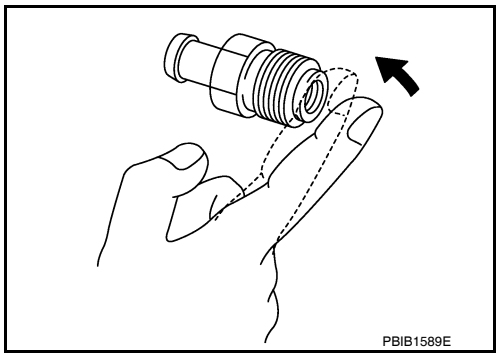

PCV VALVE VENTILATION HOSE

1. Check hoses and hose connections for leaks.
2. Disconnect all hoses and clean with compressed air. If any hose cannot be freed of obstructions, replace.

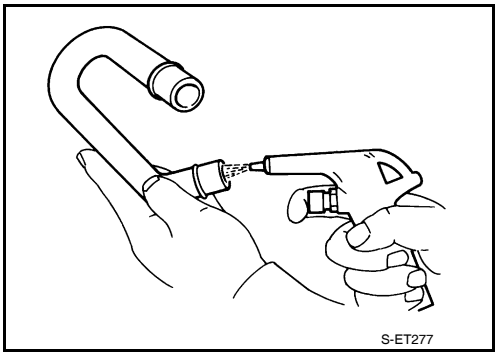

REFRIGERANT PRESSURE SENSOR

Component Description

INFOID:0000000001365897

The refrigerant pressure sensor is installed at the condenser of the air conditioner system. The sensor uses an electrostatic volume pressure transducer to convert refrigerant pressure to voltage. The voltage signal is sent to ECM, and ECM controls cooling fan system.

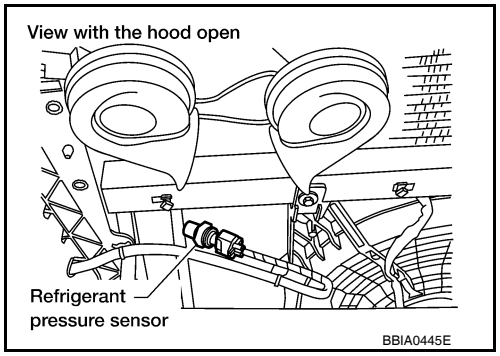

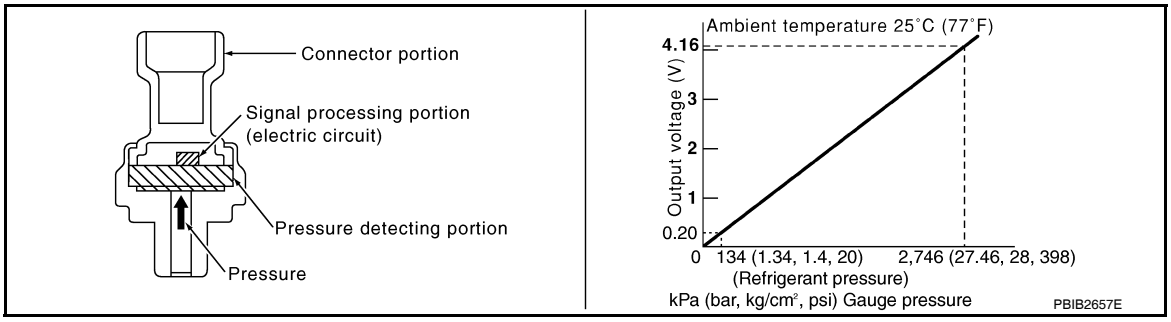

Diagnosis Procedure

INFOID:0000000001365899

1. CHECK REFRIGERANT PRESSURE SENSOR OVERALL FUNCTION

1. Start engine and warm it up to normal operating temperature.
2. Turn A/C switch and blower fan switch ON.
3. Check voltage between ECM terminal 70 and ground with CONSULT-III or tester.

Voltage: 1.0 - 4.0V

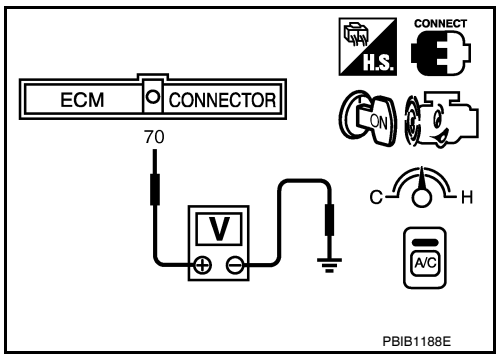

OK or NG

OK >> **INSPECTION END**
NG >> GO TO 2.

2. CHECK GROUND CONNECTIONS

1. Turn A/C switch and blower fan switch OFF.
2. Turn ignition switch OFF.
3. Loosen and retighten three ground screws on the body.

Refer to EC-86, "Ground Inspection".

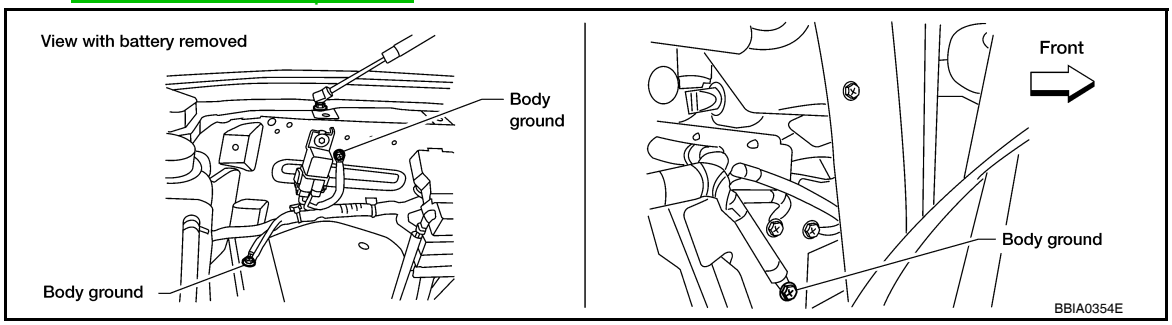

OK or NG

OK >> GO TO 3.
NG >> Repair or replace ground connections.

3. CHECK REFRIGERANT PRESSURE SENSOR POWER SUPPLY CIRCUIT

1. Disconnect refrigerant pressure sensor harness connector.
2. Turn ignition switch ON.

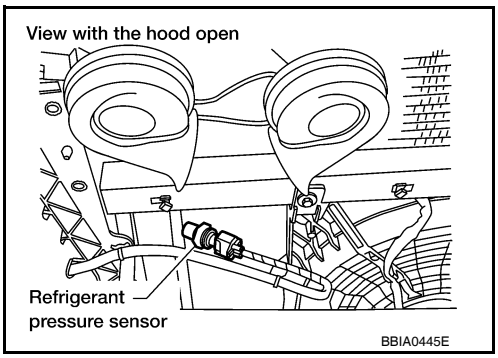

3. Check voltage between refrigerant pressure sensor terminal 1 and ground with CONSULT-III or tester.

Voltage: Approximately 5V

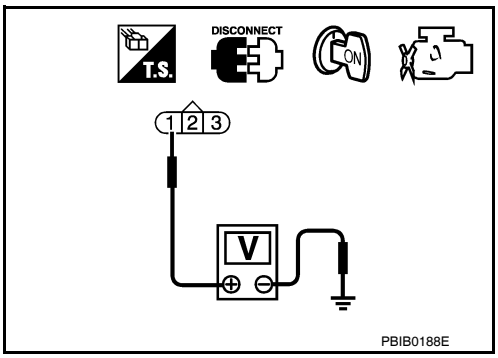

OK or NG

OK >> GO TO 5.
NG >> GO TO 4.

4. DETECT MALFUNCTIONING PART

Check the following.
- Harness connectors E5, F14
- Harness for open or short between ECM and refrigerant pressure sensor

>> Repair harness or connectors.

5. CHECK REFRIGERANT PRESSURE SENSOR GROUND CIRCUIT FOR OPEN AND SHORT

1. Turn ignition switch OFF.
2. Disconnect ECM harness connector.
3. Check harness continuity between refrigerant pressure sensor terminal 3 and ECM terminal 67. Refer to Wiring Diagram.

Continuity should exist.

4. Also check harness for short to ground and short to power.

OK or NG

OK >> GO TO 7.
NG >> GO TO 6.

6. DETECT MALFUNCTIONING PART

Check the following.
- Harness connectors E5, F14
- Harness for open or short between ECM and refrigerant pressure sensor

>> Repair open circuit or short to ground or short to power in harness or connectors.

7. CHECK REFRIGERANT PRESSURE SENSOR INPUT SIGNAL CIRCUIT FOR OPEN AND SHORT

1. Check harness continuity between ECM terminal 70 and refrigerant pressure sensor terminal 2. Refer to Wiring Diagram.

Continuity should exist.

2. Also check harness for short to ground and short to power.

OK or NG

OK >> GO TO 9.
NG >> GO TO 8.

8. DETECT MALFUNCTIONING PART

Check the following.
- Harness connectors E5, F14
- Harness for open or short between ECM and refrigerant pressure sensor

>> Repair open circuit or short to ground or short to power in harness or connectors.

9. CHECK INTERMITTENT INCIDENT

Refer to GI-35, "How to Check Terminal" and GI-38, "Intermittent Incident".

OK or NG

OK >> Replace refrigerant pressure sensor.
NG >> Repair or replace.

ECU DIAGNOSIS

ECM

CONSULT-III Reference Value in Data Monitor Mode

INFOID:0000000001351350

Remarks:
- Specification data are reference values.
- Specification data are output/input values which are detected or supplied by the ECM at the connector.
  * Specification data may not be directly related to their components signals/values/operations.
  i.e. Adjust ignition timing with a timing light before monitoring IGN TIMING, because the monitor may show the specification data in spite of the ignition timing not being adjusted to the specification data. This IGN TIMING monitors the data calculated by the ECM according to the signals input from the camshaft position sensor and other ignition timing related sensors.

MONITOR ITEM	CONDITION		SPECIFICATION
ENG SPEED	• Run engine and compare CONSULT-III value with the tachometer indication.		Almost the same speed as the tachometer indication.
MAS A/F SE-B1	See EC-75.		
B/FUEL SCHDL	See EC-75.		
A/F ALPHA-B1 A/F ALPHA-B2	See EC-75.		
COOLAN TEMP/S	• Engine: After warming up		More than 70°C (158°F)
A/F SEN1 (B1) A/F SEN1 (B2)	• Engine: After warming up	Maintaining engine speed at 2,000 rpm	Fluctuates around 2.2 V
HO2S2 (B1) HO2S2 (B2)	• Revving engine from idle to 3,000 rpm quickly after the following conditions are met. - Engine: After warming up - Keeping the engine speed between 3,500 and 4,000 rpm for 1 minute and at idle for 1 minute under no load		0 - 0.3V ←→ Approx. 0.6 - 1.0V
HO2S2 MNTR (B1) HO2S2 MNTR (B2)	• Revving engine from idle to 3,000 rpm quickly after the following conditions are met. - Engine: After warming up - Keeping the engine speed between 3,500 and 4,000 rpm for 1 minute and at idle for 1 minute under no load		LEAN ←→ RICH
VHCL SPEED SE	• Turn drive wheels and compare CONSULT-III value with the speedometer indication.		Almost the same speed as the speedometer indication
BATTERY VOLT	• Ignition switch: ON (Engine stopped)		11 - 14V
ACCEL SEN 1	• Ignition switch: ON (Engine stopped)	Accelerator pedal: Fully released	0.5 - 1.0V
		Accelerator pedal: Fully depressed	4.2 - 4.8V
ACCEL SEN 2*1	• Ignition switch: ON (Engine stopped)	Accelerator pedal: Fully released	0.5 - 1.0V
		Accelerator pedal: Fully depressed	4.2 - 4.8V
TP SEN 1-B1 TP SEN 2-B1	• Ignition switch: ON (Engine stopped) • Selector lever: D	Accelerator pedal: Fully released	More than 0.36V
		Accelerator pedal: Fully depressed	Less than 4.75V
EVAP SYS PRES	• Ignition switch: ON		Approx. 1.8 - 4.8V
START SIGNAL	• Ignition switch: ON → START → ON		OFF → ON → OFF
CLSD THL POS	• Ignition switch: ON (Engine stopped)	Accelerator pedal: Fully released	ON
		Accelerator pedal: Slightly depressed	OFF
AIR COND SIG	• Engine: After warming up, idle the engine	Air conditioner switch: OFF	OFF
		Air conditioner switch: ON (Compressor operates.)	ON
P/N POSI SW	• Ignition switch: ON	Selector lever: P or N	ON
		Selector lever: Except above	OFF
PW/ST SIGNAL	• Engine: After warming up, idle the engine	Steering wheel: Not being turned (Forward direction)	OFF
		Steering wheel: Being turned	ON

MONITOR ITEM	CONDITION		SPECIFICATION
LOAD SIGNAL	• Ignition switch: ON	Rear window defogger switch is ON and/or lighting switch is in 2nd.	ON
		Rear window defogger switch is OFF and lighting switch is OFF.	OFF
IGNITION SW	• Ignition switch: ON → OFF → ON		ON → OFF → ON
HEATER FAN SW	• Engine: After warming up, idle the engine	Heater fan control switch: ON	ON
		Heater fan control switch: OFF	OFF
BRAKE SW	• Ignition switch: ON	Brake pedal: Fully released	OFF
		Brake pedal: Slightly depressed	ON
INJ PULSE-B1 INJ PULSE-B2	• Engine: After warming up • Selector lever: P or N • Air conditioner switch: OFF • No load	Idle	2.0 - 2.8 msec
		2,000 rpm	1.9 - 2.9 msec
IGN TIMING	• Engine: After warming up • Selector lever: P or N • Air conditioner switch: OFF • No load	Idle	10° - 20° BTDC
		2,000 rpm	25° - 45° BTDC
CAL/LD VALUE	• Engine: After warming up • Selector lever: P or N • Air conditioner switch: OFF • No load	Idle	14% - 33%
		2,500 rpm	12% - 25%
MASS AIRFLOW	• Engine: After warming up • Selector lever: P or N • Air conditioner switch: OFF • No load	Idle	3.0 - 9.0 g·m/s
		2,500 rpm	9.0 - 28.0 g·m/s
PURG VOL C/V	• Engine: After warming up • Selector lever: P or N • Air conditioner switch: OFF • No load	Idle (Accelerator pedal: Not depressed even slightly, after engine starting.)	0%
		2,000 rpm	—
INT/V TIM (B1) INT/V TIM (B2)	• Engine: After warming up • Selector lever: P or N • Air conditioner switch: OFF • No load	Idle	–5° - 5°CA
		2,000 rpm	Approx. 0° - 20°CA
INT/V SOL (B1) INT/V SOL (B2)	• Engine: After warming up • Selector lever: P or N • Air conditioner switch: OFF • No load	Idle	0% - 2%
		2,000 rpm	Approx. 25% - 50%
AIR COND RLY	• Engine: After warming up, idle the engine	Air conditioner switch: OFF	OFF
		Air conditioner switch: ON (Compressor: Operates)	ON
FUEL PUMP RLY	• For 1 second after turning ignition switch ON • Engine running or cranking		ON
	• Except above conditions		OFF
VENT CONT/V	• Ignition switch: ON		OFF
THRTL RELAY	• Ignition switch: ON		ON
COOLING FAN	• Engine: After warming up, idle the engine • Air conditioner switch: OFF	Engine coolant temperature: 99°C (210°F) or less	OFF
		Engine coolant temperature: 100°C (212°F) or more	HI
HO2S2 HTR (B1) HO2S2 HTR (B2)	• Engine speed: Below 3,600 rpm after the following conditions are met. - Engine: After warming up - Keeping the engine speed between 3,500 and 4,000 rpm for 1 minute and at idle for 1 minute under no load		ON
	• Engine speed: Above 3,600 rpm		OFF

MONITOR ITEM	CONDITION		SPECIFICATION
I/P PULLY SPD	• Vehicle speed: More than 20 km/h (12 MPH)		Almost the same speed as the tachometer indication
VEHICLE SPEED	• Turn drive wheels and compare CONSULT-III value with the speedometer indication.		Almost the same speed as the speedometer indication
TRVL AFTER MIL	• Ignition switch: ON	Vehicle has traveled after MIL has turned ON.	0 - 65,535 km (0 - 40,723 mile)
A/F S1 HTR (B1) A/F S1 HTR (B2)	• Engine: After warming up, idle the engine		4 - 100%
AC PRESS SEN	• Engine: Idle • Both A/C switch and blower fan switch: ON (Compressor operates.)		1.0 - 4.0V
VHCL SPEED SE	• Turn drive wheels and compare CONSULT-III value with the speedometer indication.		Almost the same speed as the speedometer indication
SET VHCL SPD	• Engine: Running	ASCD: Operating.	The preset vehicle speed is displayed.
MAIN SW	• Ignition switch: ON	MAIN switch: Pressed	ON
		MAIN switch: Released	OFF
CANCEL SW	• Ignition switch: ON	CANCEL switch: Pressed	ON
		CANCEL switch: Released	OFF
RESUME/ACC SW	• Ignition switch: ON	RESUME/ACCELERATE switch: Pressed	ON
		RESUME/ACCELERATE switch: Released	OFF
SET SW	• Ignition switch: ON	SET/COAST switch: Pressed	ON
		SET/COAST switch: Released	OFF
DIST SW	• Ignition switch: ON	DISTANCE switch: Pressed	ON
		DISTANCE switch: Released	OFF
BRAKE SW1	• Ignition switch: ON	Brake pedal: Fully released	ON
		Brake pedal: Slightly depressed	OFF
BRAKE SW2	• Ignition switch: ON	Brake pedal: Fully released	OFF
		Brake pedal: Slightly depressed	ON
CRUISE LAMP	• Ignition switch: ON	MAIN switch: Pressed at the 1st time → at the 2nd time	ON → OFF
SET LAMP	• MAIN switch: ON • Vehicle speed: Between 40 km/h (25 MPH) and 144 km/h (89 MPH)	ASCD: Operating	ON
		ASCD: Not operating	OFF
ALT DUTY	• Engine: Idle		0 - 80%
BAT CUR SEN	• Engine speed: Idle • Battery: Fully charged*2 • Selector lever: P or N • Air conditioner switch: OFF • No load		Approx. 2,600 - 3,500mV
ALT DUTY SIG	• Power generation voltage variable control: Operating		ON
	• Power generation voltage variable control: Not operating		OFF

*1: Accelerator pedal position sensor 2 signal and throttle position sensor 2 signal are converted by ECM internally. Thus, they differ from ECM terminals voltage signal.

*2: Before measuring the terminal voltage, confirm the battery is fully charged. Refer to PG-73.

ECM Harness Connector Terminal Layout

INFOID:0000000001351346

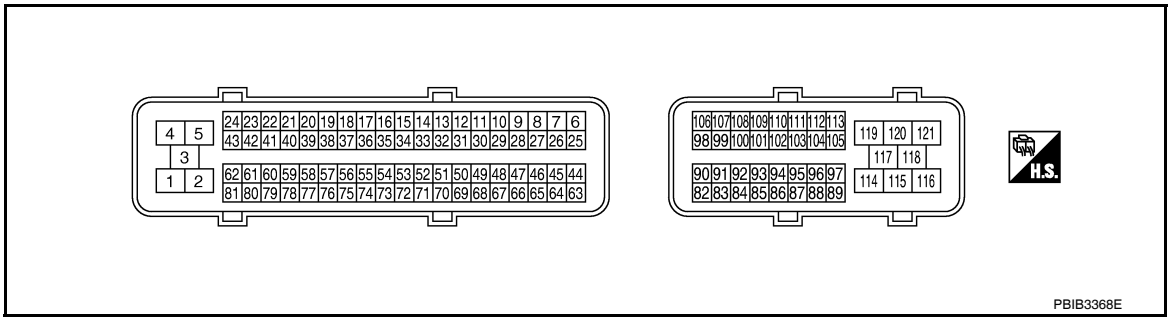

ECM Terminal and Reference Value

INFOID:0000000001351347

PREPARATION

ECM is located in the engine room passenger side behind battery.

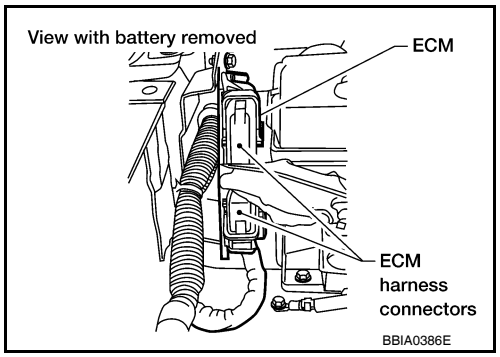

ECM INSPECTION TABLE

Specification data are reference values and are measured between each terminal and ground.
Pulse signal is measured by CONSULT-III.

CAUTION:

Do not use ECM ground terminals when measuring input/output voltage. Doing so may result in damage to the ECMs transistor. Use a ground other than ECM terminals, such as the ground.

TERMINAL NO.	WIRE COLOR	ITEM	CONDITION	DATA (DC Voltage)
1	B	ECM ground	**[Engine is running]** • Idle speed	Body ground
2	LG/B	A/F sensor 1 heater (bank 1)	**[Engine is running]** • **Warm-up condition** • Idle speed (More than 140 seconds after starting engine)	Approximately 2.9 - 8.8V★ 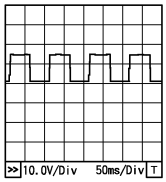 PBIA8148J
3	L	Throttle control motor relay power supply	**[Ignition switch: ON]**	BATTERY VOLTAGE (11 - 14V)
4	L/W	Throttle control motor (Close)	**[Ignition switch: ON]** • Engine: Stopped • Selector lever: D • Accelerator pedal: Fully released	0 - 14V★ 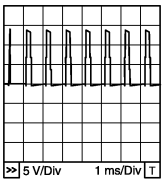 PBIB1104E

TERMINAL NO.	WIRE COLOR	ITEM	CONDITION	DATA (DC Voltage)
5	L/B	Throttle control motor (Open)	**[Ignition switch: ON]** • Engine: Stopped • Selector lever: D • Accelerator pedal: Fully depressed	0 - 14V★ 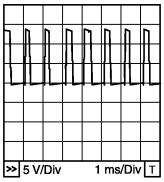 PBIB1105E
6	GR	Heated oxygen sensor 2 heater (bank 1)	**[Engine is running]** • Engine speed: Below 3,600 rpm after the following conditions are met. - Engine: After warming up - Keeping the engine speed between 3,500 and 4,000 rpm for 1 minute and at idle for 1 minute under no load	0 - 1.0V
			[Ignition switch: ON] • Engine: Stopped **[Engine is running]** • Engine speed: Above 3,600 rpm	BATTERY VOLTAGE (11 - 14V)
10	W	Intake valve timing control solenoid valve (bank 1)	**[Engine is running]** • **Warm-up condition** • Idle speed	BATTERY VOLTAGE (11 - 14V)
			[Engine is running] • **Warm-up condition** • Engine speed: 2,000rpm	7 - 12V★ 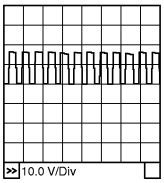 PBIB1790E
11	LG	Intake valve timing control solenoid valve (bank 2)	**[Engine is running]** • **Warm-up condition** • Idle speed	BATTERY VOLTAGE (11 - 14V)
			[Engine is running] • **Warm-up condition** • Engine speed: 2,000rpm	7 - 12V★ 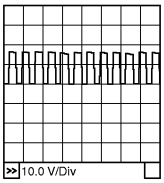 PBIB1790E
12	R	Power steering pressure sensor	**[Engine is running]** • Steering wheel: Being turned	0.5 - 4.5V
			[Engine is running] • Steering wheel: Not being turned	0.4 - 0.8V

TER-MI-NAL NO.	WIRE COLOR	ITEM	CONDITION	DATA (DC Voltage)
13	O	Crankshaft position sensor (POS)	**[Engine is running]** • **Warm-up condition** • Idle speed **NOTE:** The pulse cycle changes depending on rpm at idle	Approximately 10V★ 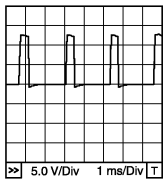 PBIB1041E
			[Engine is running] • Engine speed: 2,000 rpm	Approximately 10V★ 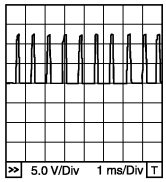 PBIB1042E
14	Y	Camshaft position sensor (PHASE)	**[Engine is running]** • **Warm-up condition** • Idle speed **NOTE:** The pulse cycle changes depending on rpm at idle	1.0 - 4.0V★ 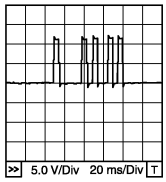 PBIB1039E
			[Engine is running] • Engine speed: 2,000 rpm	1.0 - 4.0V★ 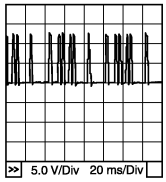 PBIB1040E
15	W	Knock sensor (bank 1)	**[Engine is running]** • Idle speed	Approximately 2.5V
16	G/L	A/F sensor 1 (bank 1)	**[Engine is running]** • **Warm-up condition** • Engine speed: 2,000 rpm	Approximately 1.8V Output voltage varies with air fuel ratio.

TERMINAL NO.	WIRE COLOR	ITEM	CONDITION	DATA (DC Voltage)
21 22 23 44	O/L BR GR/W O	Fuel injector No. 5 Fuel injector No. 3 Fuel injector No. 1 Fuel injector No. 7	**[Engine is running]** • **Warm-up condition** • Idle speed **NOTE:** The pulse cycle changes depending on rpm at idle	BATTERY VOLTAGE (11 - 14V)★ 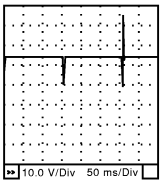 SEC984C
			[Engine is running] • **Warm-up condition** • Engine speed: 2,000 rpm	BATTERY VOLTAGE (11 - 14V)★ 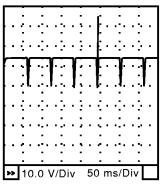 SEC985C
24 43	GR/G GR/G	A/F sensor 1 heater (bank 2)	**[Engine is running]** • **Warm-up condition** • Idle speed (More than 140 seconds after starting engine)	Approximately 2.9 - 8.8V★ 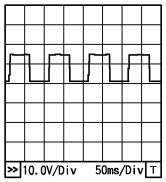 PBIA8148J
25	O/G	Heated oxygen sensor 2 heater (bank 2)	**[Engine is running]** • Engine speed: Below 3,600 rpm after the following conditions are met. - Engine: After warming up - Keeping the engine speed between 3,500 and 4,000 rpm for 1 minute and at idle for 1 minute under no load	0 - 1.0V
			[Ignition switch: ON] • Engine: Stopped **[Engine is running]** • Engine speed: Above 3,600 rpm	BATTERY VOLTAGE (11 - 14V)
32	L	EVAP control system pressure sensor	**[Ignition switch: ON]**	Approximately 1.8 - 4.8V
34	R/B	Intake air temperature sensor	**[Engine is running]**	Approximately 0 - 4.8V Output voltage varies with intake air temperature.
35	BR/R	A/F sensor 1 (bank 1)	**[Engine is running]** • **Warm-up condition** • Engine speed: 2,000 rpm	Approximately 1.8V Output voltage varies with air fuel ratio.
36	W	Knock sensor (bank 2)	**[Engine is running]** • Idle speed	Approximately 2.5V

TERMINAL NO.	WIRE COLOR	ITEM	CONDITION	DATA (DC Voltage)
40 41 42 63	Y/G P L G	Fuel injector No. 6 Fuel injector No. 4 Fuel injector No. 2 Fuel injector No. 8	**[Engine is running]** • **Warm-up condition** • Idle speed **NOTE:** The pulse cycle changes depending on rpm at idle	BATTERY VOLTAGE (11 - 14V)★ 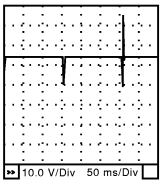 SEC984C
			[Engine is running] • **Warm-up condition** • Engine speed: 2,000 rpm	BATTERY VOLTAGE (11 - 14V)★ 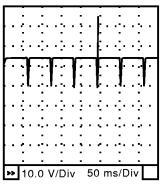 SEC985C
45	L/Y	EVAP canister purge volume control solenoid valve	**[Engine is running]** • Idle speed • Accelerator pedal: Not depressed even slightly, after engine starting	BATTERY VOLTAGE (11 - 14V)★ 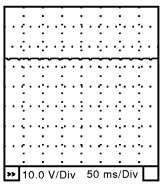 SEC990C
			[Engine is running] • Engine speed: About 2,000 rpm (More than 100 seconds after starting engine)	BATTERY VOLTAGE (11 - 14V)★ 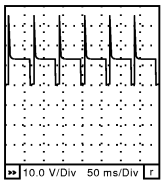 SEC991C
47	Y	Sensor power supply (Throttle position sensor)	**[Ignition switch: ON]**	Approximately 5V
48	SB	Sensor power supply (EVAP control system pressure sensor)	**[Ignition switch: ON]**	Approximately 5V
49	R/Y	Sensor power supply (Refrigerant pressure sensor)	**[Ignition switch: ON]**	Approximately 5V
50	B	Throttle position sensor 1	**[Ignition switch: ON]** • Engine: Stopped • Selector lever: D • Accelerator pedal: Fully released	More than 0.36V
			[Ignition switch: ON] • Engine: Stopped • Selector lever: D • Accelerator pedal: Fully depressed	Less than 4.75V

TERMINAL NO.	WIRE COLOR	ITEM	CONDITION	DATA (DC Voltage)
51	W	Mass air flow sensor	**[Engine is running]** • **Warm-up condition** • Idle speed	1.0 - 1.3V
			[Engine is running] • **Warm-up condition** • Engine speed: 2,500 rpm	1.7 - 2.1V
53	L	Intake valve timing control position sensor (Bank 2)	**[Engine is running]** • **Warm-up condition** • Idle speed	0 - 1.0V
			[Engine is running] • Engine speed: 2,000 rpm	0 - 1.0V ★ 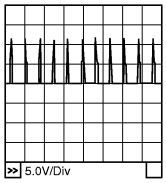 PBIB2046E
55	R	Heated oxygen sensor 2 (bank 1)	**[Engine is running]** • Revving engine from idle to 3,000 rpm quickly after the following conditions are met. - Engine: After warming up - Keeping the engine speed between 3,500 and 4,000 rpm for 1 minute and at idle for 1 minute under no load	0 - Approximately 1.0V
56	BR/G	A/F sensor 1 (bank 1)	**[Ignition switch: ON]**	Approximately 2.2V
46 60 61 62	L/R GR/R O/W Y/R	Ignition signal No. 7 Ignition signal No. 5 Ignition signal No. 3 Ignition signal No. 1	**[Engine is running]** • **Warm-up condition** • Idle speed **NOTE:** The pulse cycle changes depending on rpm at idle	0 - 0.3V★ 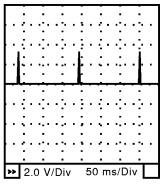 SEC986C
			[Engine is running] • **Warm-up condition** • Engine speed: 2,500 rpm	0.1 - 0.6V★ 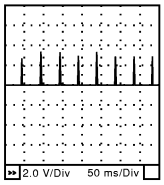 SEC987C
66	R	Sensor ground (Throttle position sensor)	**[Engine is running]** • **Warm-up condition** • Idle speed	Approximately 0V
67	B	Sensor ground	**[Engine is running]** • **Warm-up condition** • Idle speed	Approximately 0V
68	W/L	Sensor power supply (PSP sensor)	**[Ignition switch: ON]**	Approximately 5V

TERMINAL NO.	WIRE COLOR	ITEM	CONDITION	DATA (DC Voltage)
69	W	Throttle position sensor 2	**[Ignition switch: ON]** • Engine: Stopped • Selector lever: D • Accelerator pedal: Fully released	Less than 4.75V
			[Ignition switch: ON] • Engine: Stopped • Selector lever: D • Accelerator pedal: Fully depressed	More than 0.36V
70	B/W	Refrigerant pressure sensor	**[Engine is running]** • **Warm-up condition** • Both A/C switch and blower fan switch: ON (Compressor operates.)	1.0 - 4.0V
71	R	Battery current sensor	**[Engine is running]** • Battery: Fully charged* • Idle speed	Approximately 2.6 - 3.5V
72	Y	Intake valve timing control position sensor (Bank 1)	**[Engine is running]** • **Warm-up condition** • Idle speed	0 - 1.0V
			[Engine is running] • Engine speed: 2,000rpm	0 - 1.0V ★ 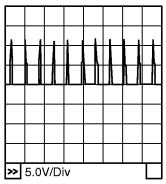 PBIB2046E
73	Y/B	Engine coolant temperature sensor	**[Engine is running]**	Approximately 0 - 4.8V Output voltage varies with engine coolant temperature.
74	L	Heated oxygen sensor 2 (bank 2)	**[Engine is running]** • Revving engine from idle to 3,000 rpm quickly after the following conditions are met. - Engine: After warming up - Keeping the engine speed between 3,500 and 4,000 rpm for 1 minute and at idle for 1 minute under no load	0 - Approximately 1.0V
75	L/P	A/F sensor 1 (bank 2)	**[Ignition switch: ON]**	Approximately 2.2V
78	B/W	Sensor ground (Heated oxygen sensor 2)	**[Engine is running]** • **Warm-up condition** • Idle speed	Approximately 0V

TER-MI-NAL NO.	WIRE COLOR	ITEM	CONDITION	DATA (DC Voltage)
65 79 80 81	G/R V/W W/R W/G	Ignition signal No. 8 Ignition signal No. 6 Ignition signal No. 4 Ignition signal No. 2	**[Engine is running]** • **Warm-up condition** • Idle speed **NOTE:** The pulse cycle changes depending on rpm at idle	0 - 0.3V★ 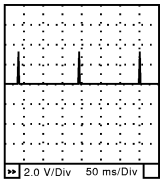 SEC986C
			[Engine is running] • **Warm-up condition** • Engine speed: 2,500 rpm	0.1 - 0.6V★ 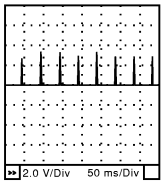 SEC987C
82	B/R	Sensor ground (APP sensor 1)	**[Engine is running]** • **Warm-up condition** • Idle speed	Approximately 0V
83	G/W	Sensor ground (APP sensor 2)	**[Engine is running]** • **Warm-up condition** • Idle speed	Approximately 0V
86	P	CAN communication line	—	—
90	L	Sensor power supply (APP sensor 1)	**[Ignition switch: ON]**	Approximately 5V
91	W/R	Sensor power supply (APP sensor 2)	**[Ignition switch: ON]**	Approximately 5V
94	L	CAN communication line	—	—
98	G/R	Accelerator pedal position sensor 2	**[Ignition switch: ON]** • Engine: Stopped • Accelerator pedal: Fully released	0.25 - 0.50V
			[Ignition switch: ON] • Engine: Stopped • Accelerator pedal: Fully depressed	2.0 - 2.5V
99	G/R	ASCD steering switch (Models with ICC system)	**[Ignition switch: ON]** • ICC steering switch: OFF	Approximately 4.3V
			[Ignition switch: ON] • MAIN switch: Pressed	Approximately 0V
			[Ignition switch: ON] • CANCEL switch: Pressed	Approximately 1.3V
			[Ignition switch: ON] • RESUME/ACCELERATE switch: Pressed	Approximately 3.7V
			[Ignition switch: ON] • SET/COAST switch: Pressed	Approximately 3V
			[Ignition switch: ON] • DISTANCE switch: Pressed	Approximately 2.2V

TERMINAL NO.	WIRE COLOR	ITEM	CONDITION	DATA (DC Voltage)
99	G/R	ASCD steering switch (Models with ASCD system)	**[Ignition switch: ON]** • ASCD steering switch: OFF	Approximately 4V
			[Ignition switch: ON] • MAIN switch: Pressed	Approximately 0V
			[Ignition switch: ON] • CANCEL switch: Pressed	Approximately 1V
			[Ignition switch: ON] • RESUME/ACCELERATE switch: Pressed	Approximately 3V
			[Ignition switch: ON] • SET/COAST switch: Pressed	Approximately 2V
101	R/W	Stop lamp switch	**[Ignition switch: OFF]** • Brake pedal: Fully released	Approximately 0V
			[Ignition switch: OFF] • Brake pedal: Slightly depressed	BATTERY VOLTAGE (11 - 14V)
102	GR/R	PNP signal	**[Ignition switch: ON]** • Selector lever: P or N	Approximately 0V
			[Ignition switch: ON] • Except the above gear position	BATTERY VOLTAGE (11 - 14V)
104	O	Throttle control motor relay	**[Ignition switch: OFF]**	BATTERY VOLTAGE (11 - 14V)
			[Ignition switch: ON]	0 - 1.0V
106	BR/W	Accelerator pedal position sensor 1	**[Ignition switch: ON]** • Engine: Stopped • Accelerator pedal: Fully released	0.5 - 1.0V
			[Ignition switch: ON] • Engine: Stopped • Accelerator pedal: Fully depressed	4.2 - 4.8V
107	V/R	Fuel tank temperature sensor	**[Engine is running]**	Approximately 0 - 4.8V Output voltage varies with fuel tank temperature.
108	BR/W	ICC brake switch (Models with ICC system) ASCD brake switch (Models with ASCD system)	**[Ignition switch: ON]** • Brake pedal: Slightly depressed	Approximately 0V
			[Ignition switch: ON] • Brake pedal: Fully released	BATTERY VOLTAGE (11 - 14V)
109	L/W	Ignition switch	**[Ignition switch: OFF]**	0V
			[Ignition switch: ON]	BATTERY VOLTAGE (11 - 14V)
111	W/B	ECM relay (Self shut-off)	**[Engine is running]** **[Ignition switch: OFF]** • For a few seconds after turning ignition switch OFF	0 - 1.5V
			[Ignition switch: OFF] • More than a few seconds after turning ignition switch OFF	BATTERY VOLTAGE (11 - 14V)
113	GR	Fuel pump relay	**[Ignition switch: ON]** • For 1 second after turning ignition switch ON **[Engine is running]**	0 - 1.5V
			[Ignition switch: ON] • More than 1 second after turning ignition switch ON	BATTERY VOLTAGE (11 - 14V)

TER-MI-NAL NO.	WIRE COLOR	ITEM	CONDITION	DATA (DC Voltage)
115 116	B B/W	ECM ground	**[Engine is running]** • Idle speed	Body ground
117	L/Y	EVAP canister vent control valve	**[Ignition switch: ON]**	BATTERY VOLTAGE (11 - 14V)
119 120	BR BR	Power supply for ECM	**[Ignition switch: ON]**	BATTERY VOLTAGE (11 - 14V)
121	W	Power supply for ECM (Back-up)	**[Ignition switch: OFF]**	BATTERY VOLTAGE (11 - 14V)

★: Average voltage for pulse signal (Actual pulse signal can be confirmed by oscilloscope.)

*:Before measuring the terminal voltage, confirm that the battery is fully charged. Refer to PG-73.

Wiring Diagram - ENGINE CONTROL SYSTEM -

INFOID:0000000001366491

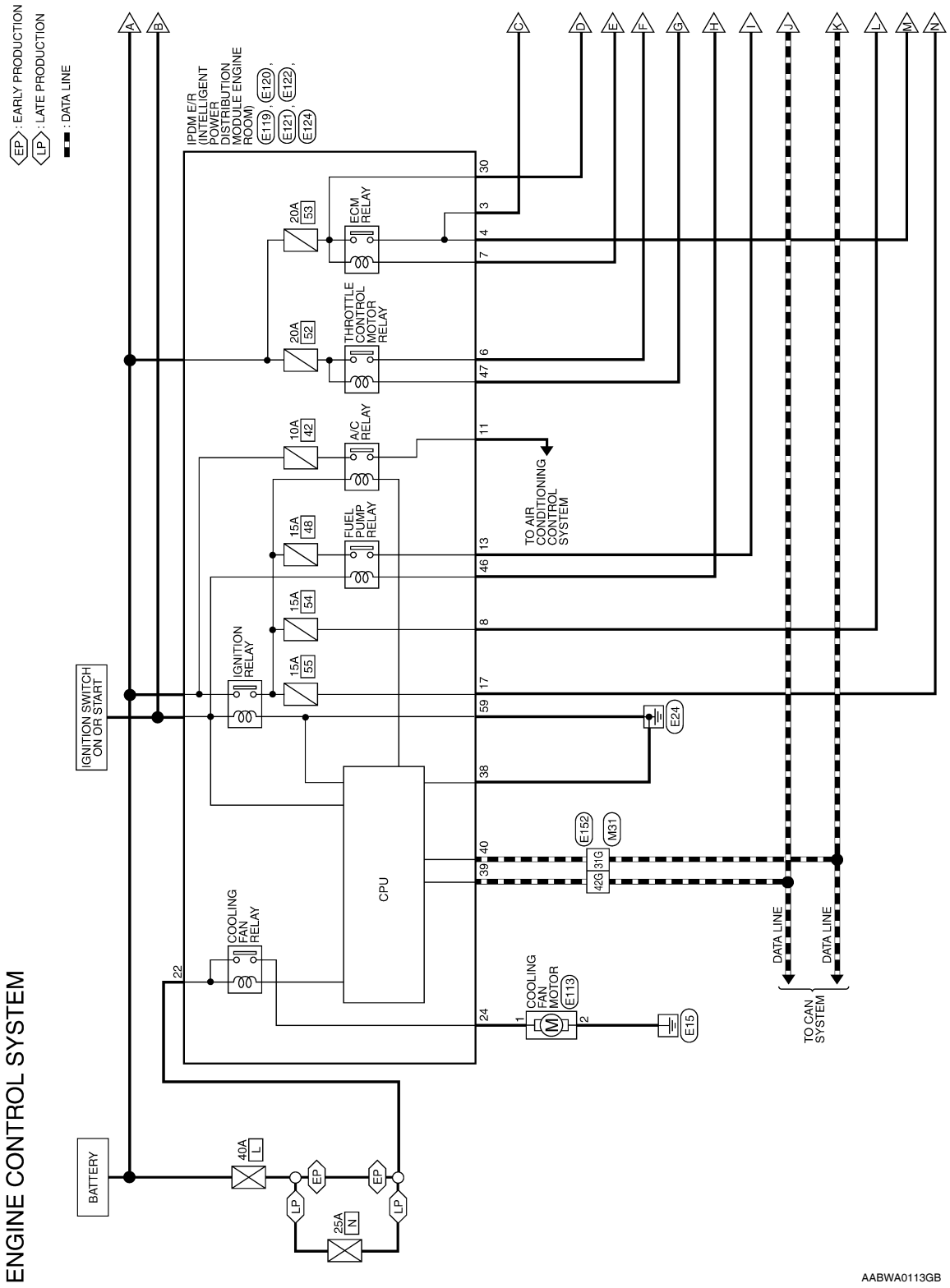

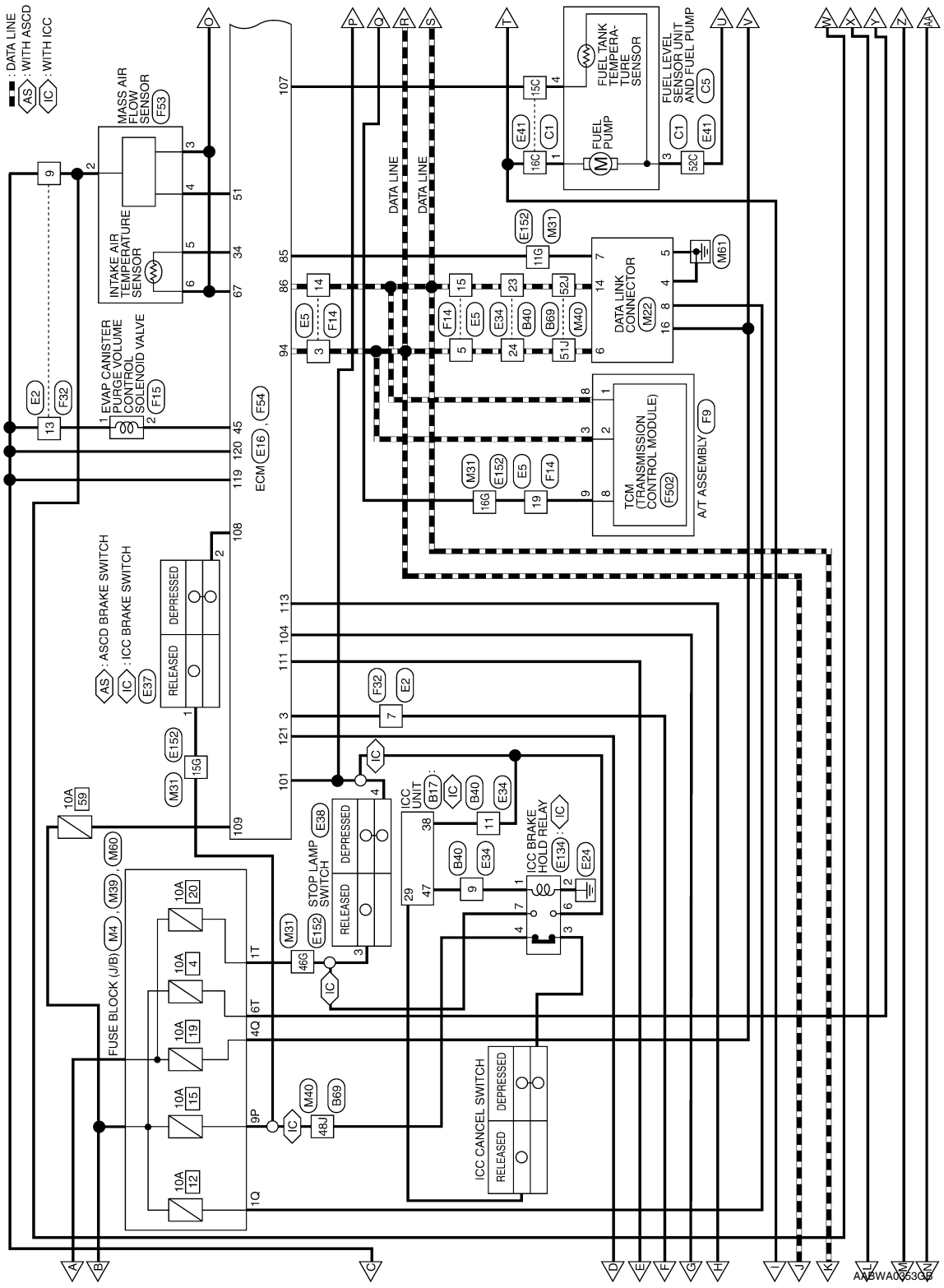
: DATA LINE
AS : WITH ASCD
IC : WITH ICC
MASS AIR FLOW SENSOR
F53
INTAKE AIR TEMPERATURE SENSOR
EVAP CANISTER PURGE VOLUME CONTROL SOLENOID VALVE
F15
E2
F32
ECM
E16
F54
DATA LINE
FUEL TANK TEMPERA-TURE SENSOR
FUEL PUMP
FUEL LEVEL SENSOR UNIT AND FUEL PUMP
C5
E41
C1
E152
M31
M61
DATA LINK CONNECTOR
M22
TCM (TRANSMISSION CONTROL MODULE)
F502
A/T ASSEMBLY
F9
AS : ASCD BRAKE SWITCH
IC : ICC BRAKE SWITCH
E37
RELEASED
DEPRESSED
STOP LAMP SWITCH
E38
ICC UNIT
B17
B40
E34
ICC BRAKE HOLD RELAY
E134
E24
FUSE BLOCK (J/B)
M4
M39
M60
10A
ICC CANCEL SWITCH
M40
B69
AWBWA0053GB

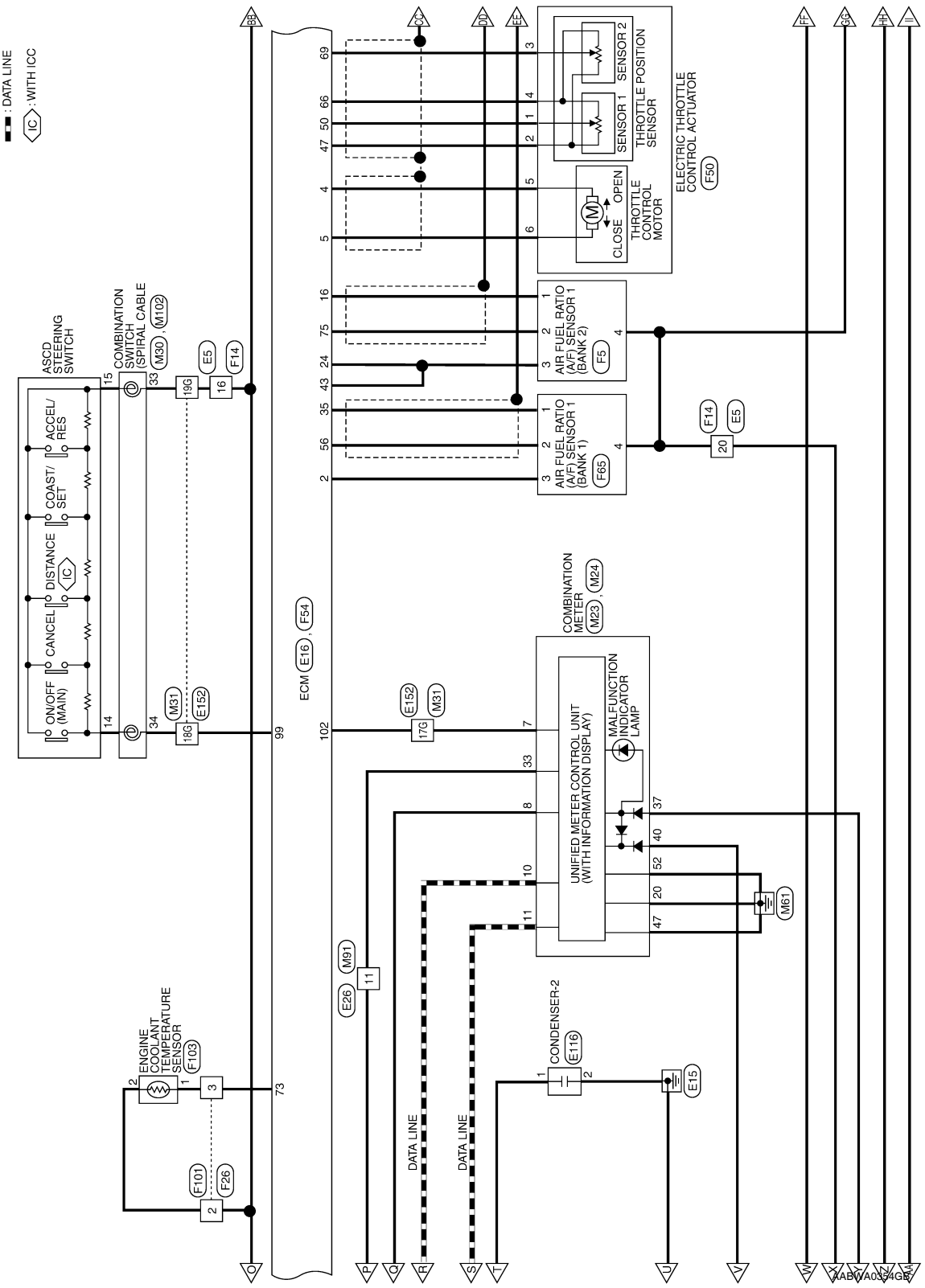
: DATA LINE
IC : WITH ICC
ASCD STEERING SWITCH
ON/OFF (MAIN)
CANCEL
DISTANCE
IC
COAST/ SET
ACCEL/ RES
COMBINATION SWITCH (SPIRAL CABLE
M30
M102
E5
F14
19G
16
18G
M31
E152
ECM
E16
F54
ENGINE COOLANT TEMPERATURE SENSOR
F103
F101
F26
DATA LINE
DATA LINE
E26
M91
11
E152
M31
17G
COMBINATION METER
M23
M24
UNIFIED METER CONTROL UNIT (WITH INFORMATION DISPLAY)
MALFUNCTION INDICATOR LAMP
M61
CONDENSER-2
E116
E15
AIR FUEL RATIO (A/F) SENSOR 1 (BANK 1)
F65
AIR FUEL RATIO (A/F) SENSOR 1 (BANK 2)
F5
F14
E5
20
ELECTRIC THROTTLE CONTROL ACTUATOR
F50
THROTTLE POSITION SENSOR
SENSOR 1
SENSOR 2
THROTTLE CONTROL MOTOR
CLOSE
OPEN
AABWA0354GB

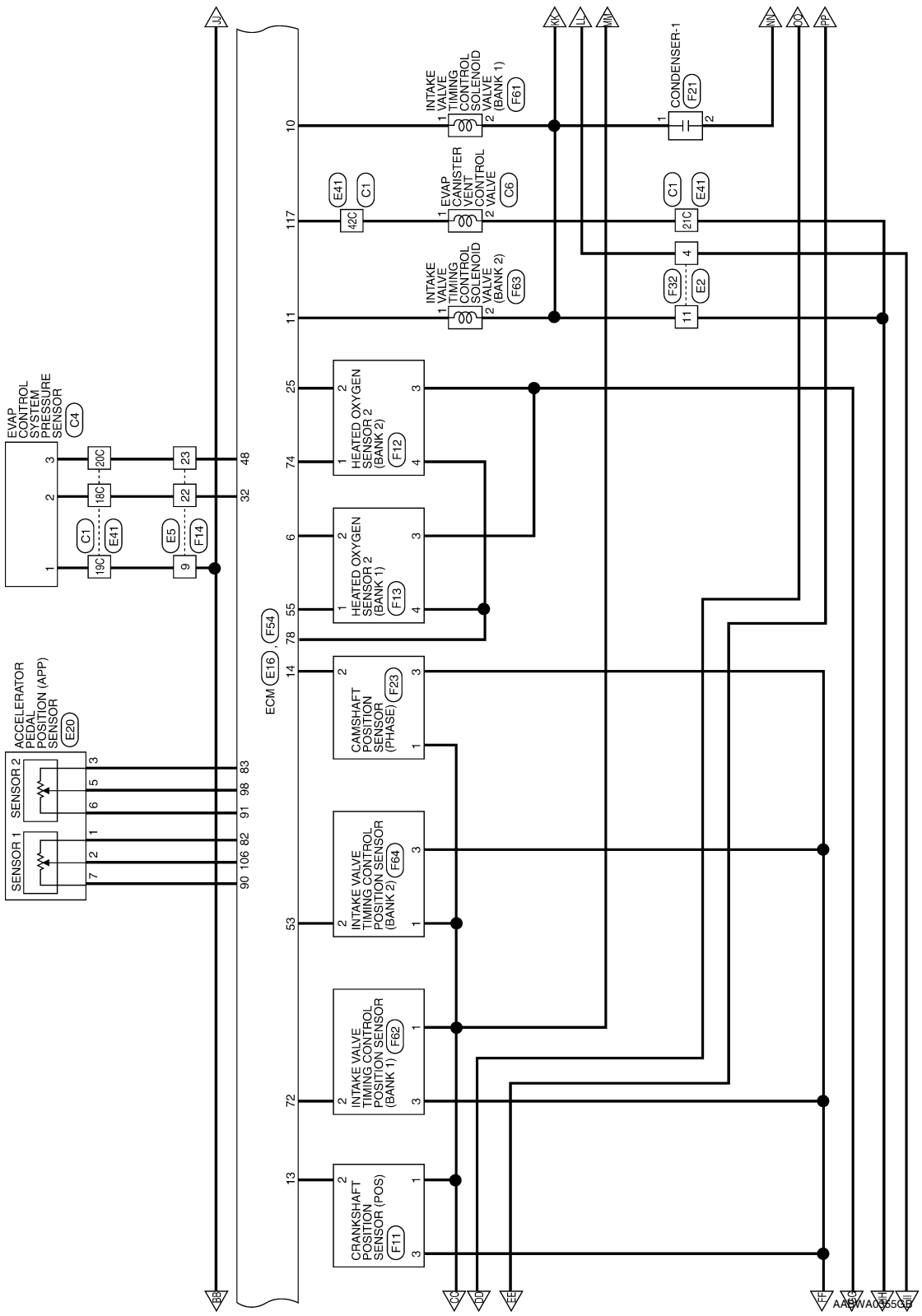
EVAP CONTROL SYSTEM PRESSURE SENSOR
C4
ACCELERATOR PEDAL POSITION (APP) SENSOR
E20
SENSOR 1
SENSOR 2
ECM E16, F54
CRANKSHAFT POSITION SENSOR (POS)
F11
INTAKE VALVE TIMING CONTROL POSITION SENSOR (BANK 1)
F62
INTAKE VALVE TIMING CONTROL POSITION SENSOR (BANK 2)
F64
CAMSHAFT POSITION SENSOR (PHASE)
F23
HEATED OXYGEN SENSOR 2 (BANK 1)
F13
HEATED OXYGEN SENSOR 2 (BANK 2)
F12
INTAKE VALVE TIMING CONTROL SOLENOID VALVE (BANK 2)
F63
EVAP CANISTER VENT CONTROL VALVE
C6
INTAKE VALVE TIMING CONTROL SOLENOID VALVE (BANK 1)
F61
CONDENSER-1
F21
AABWA0355GB

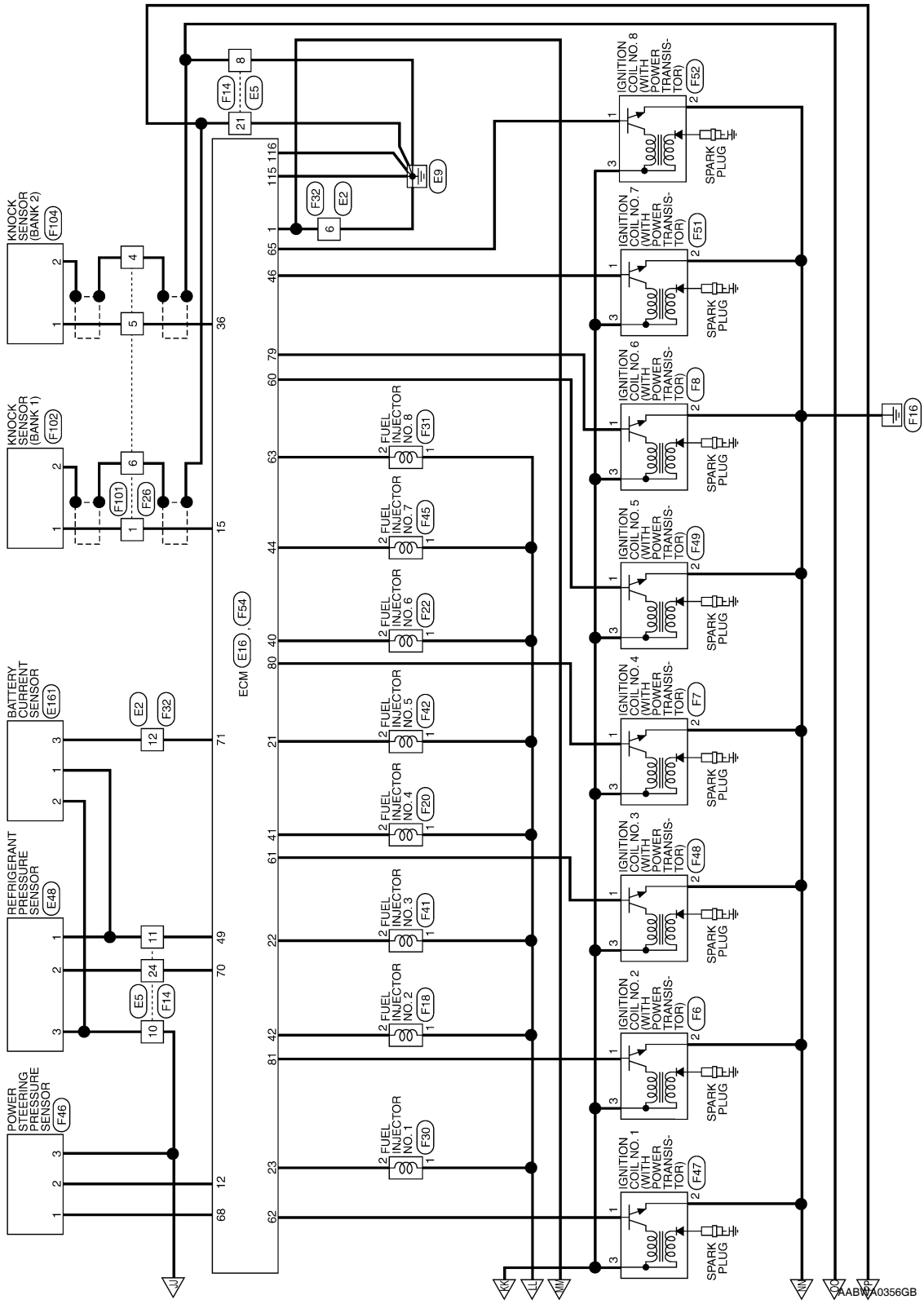
KNOCK SENSOR (BANK 2)
F104
KNOCK SENSOR (BANK 1)
F102
BATTERY CURRENT SENSOR
E161
REFRIGERANT PRESSURE SENSOR
E48
POWER STEERING PRESSURE SENSOR
F46
ECM E16, F54
2 FUEL INJECTOR NO. 1 F30
2 FUEL INJECTOR NO. 2 F18
2 FUEL INJECTOR NO. 3 F41
2 FUEL INJECTOR NO. 4 F20
2 FUEL INJECTOR NO. 5 F42
2 FUEL INJECTOR NO. 6 F22
2 FUEL INJECTOR NO. 7 F45
2 FUEL INJECTOR NO. 8 F31
IGNITION COIL NO. 1 (WITH POWER TRANSIS-TOR) F47
IGNITION COIL NO. 2 (WITH POWER TRANSIS-TOR) F6
IGNITION COIL NO. 3 (WITH POWER TRANSIS-TOR) F48
IGNITION COIL NO. 4 (WITH POWER TRANSIS-TOR) F7
IGNITION COIL NO. 5 (WITH POWER TRANSIS-TOR) F49
IGNITION COIL NO. 6 (WITH POWER TRANSIS-TOR) F8
IGNITION COIL NO. 7 (WITH POWER TRANSIS-TOR) F51
IGNITION COIL NO. 8 (WITH POWER TRANSIS-TOR) F52
SPARK PLUG
F16
E9
E2
F32
F14
E5
F101
F26
AABWA0356GB

ENGINE CONTROL SYSTEM CONNECTORS

Connector No.	M4
Connector Name	FUSE BLOCK (J/B)
Connector Color	WHITE

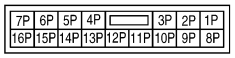

Terminal No.	Color of Wire	Signal Name
9P	R/B	–

Connector No.	M22
Connector Name	DATA LINK CONNECTOR
Connector Color	WHITE

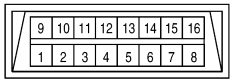

Terminal No.	Color of Wire	Signal Name
4	B	–
5	B	–
6	L	–
7	G/W	–
8	G/R	–
14	P	–
16	Y/R	–

Connector No.	M23
Connector Name	COMBINATION METER
Connector Color	WHITE

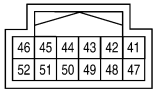

Terminal No.	Color of Wire	Signal Name
47	B	POWER GND
52	B	POWER GND

Connector No.	M24
Connector Name	COMBINATION METER
Connector Color	WHITE

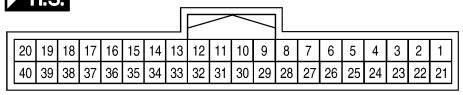

Terminal No.	Color of Wire	Signal Name
7	GR/R	–
8	B/R	–
10	L	–
11	P	–
20	B	–
33	R/G	–
37	O	–
40	Y/R	–
47	B	–

Connector No.	M30
Connector Name	COMBINATION SWITCH (SPIRAL CABLE)
Connector Color	GRAY

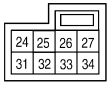

Terminal No.	Color of Wire	Signal Name
33	B	–
34	G/Y	–

AABIA0206GB

Connector No.	M31
Connector Name	WIRE TO WIRE
Connector Color	WHITE

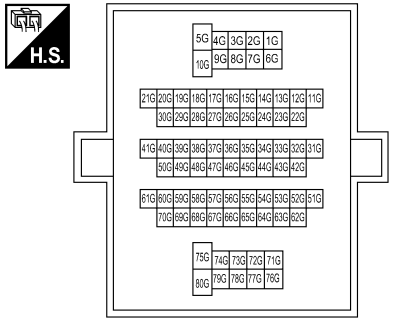

Terminal No.	Color of Wire	Signal Name
11G	G/W	–
15G	R/B	–
16G	B/R	–
17G	GR/R	–
18G	G/Y	–
19G	B	–
31G	L	–
42G	P	–
46G	R/Y	–

Connector No.	M39
Connector Name	FUSE BLOCK (J/B)
Connector Color	WHITE

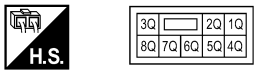

Terminal No.	Color of Wire	Signal Name
1Q	Y/R	–
4Q	G/R	–

Connector No.	M40
Connector Name	WIRE TO WIRE
Connector Color	WHITE

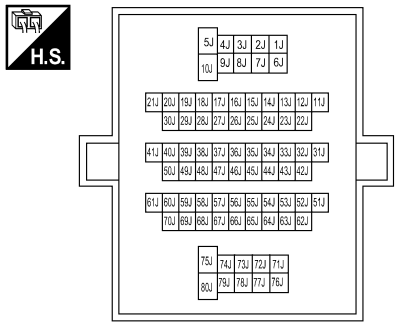

Terminal No.	Color of Wire	Signal Name
51J	L	–
52J	P	–

AABIA0207GB

Connector No.	M60
Connector Name	FUSE BLOCK (J/B)
Connector Color	WHITE

Terminal No.	Color of Wire	Signal Name
1T	R/Y	–
6T	O	–

Connector No.	M91
Connector Name	WIRE TO WIRE
Connector Color	WHITE

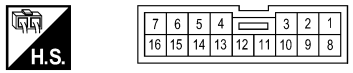

Terminal No.	Color of Wire	Signal Name
11	R/G	–

Connector No.	M102
Connector Name	COMBINATION SWITCH (SPIRAL CABLE)
Connector Color	GRAY

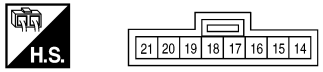

Terminal No.	Color of Wire	Signal Name
14	Y	–
15	B	–

Connector No.	E2
Connector Name	WIRE TO WIRE
Connector Color	WHITE

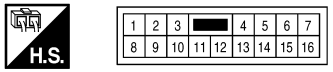

Terminal No.	Color of Wire	Signal Name
4	W	–
5	L/Y	–
6	B	–
7	L	–
9	BR	–
10	L	–
11	W/L	–
12	R	–
13	BR	–

Connector No.	E5
Connector Name	WIRE TO WIRE
Connector Color	WHITE

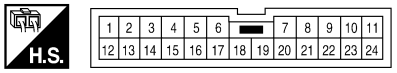

Terminal No.	Color of Wire	Signal Name
3	L	–
5	L	–
8	B	–
9	B	–
10	B	–
11	R/Y	–
14	P	–
15	P	–
16	B	–
19	B/R	–
20	R/B	–
21	B	–
22	L	–
23	SB	–
24	B/W	–

AABIA0208GB

Connector No.	E16
Connector Name	ECM
Connector Color	BLACK

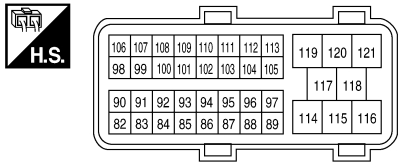

Terminal No.	Color of Wire	Signal Name
82	B/R	GND-A
83	G/W	GND-A2
85	G/W	KLINE
86	P	CAN-L
90	L	AVCC
91	W/R	AVCC2
94	L	CAN-H
98	G/R	APS2
99	G/R	ASCDSW
101	R/W	BRAKE
102	GR/R	NEUT
104	O	MOTRLY
106	BR/W	APSI
107	V/R	TF
108	BR/W	BNCSW
109	L/W	IGNSW
111	W/B	SSOFF
113	GR	FPR
115	B	GND
116	B/W	GND
117	L/Y	CDCV
119	BR	VB
120	BR	VB
121	W	BATT

Connector No.	E20
Connector Name	ACCELERATOR PEDAL POSITION (APP) SENSOR
Connector Color	WHITE

Terminal No.	Color of Wire	Signal Name
1	B/R	–
2	BR/W	–
3	G/W	–
5	G/R	–
6	W/R	–
7	L	–

Connector No.	E26
Connector Name	WIRE TO WIRE
Connector Color	WHITE

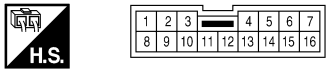

Terminal No.	Color of Wire	Signal Name
11	R/G	–

Connector No.	E34
Connector Name	WIRE TO WIRE
Connector Color	WHITE

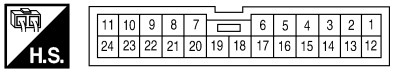

Terminal No.	Color of Wire	Signal Name
9	BR	–
11	R/G	–
23	P	–
24	L	–

Connector No.	E37
Connector Name	ASCD BRAKE SWITCH (WITH ASCD) ICC BRAKE SWITCH (WITH ICC)
Connector Color	BROWN

Terminal No.	Color of Wire	Signal Name
1	R/B	–
2	BR/W	–

Connector No.	E38
Connector Name	STOP LAMP SWITCH
Connector Color	WHITE

Terminal No.	Color of Wire	Signal Name
1	R/Y	–
2	R/G	–

AABIA0209GB

Connector No.	E41
Connector Name	WIRE TO WIRE
Connector Color	GRAY

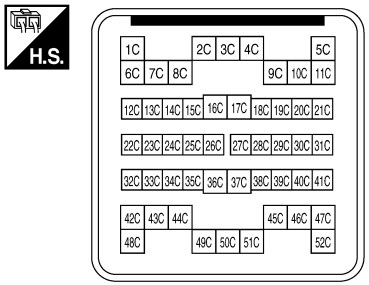

Terminal No.	Color of Wire	Signal Name
15C	V/R	–
16C	B/Y	–
18C	L	–
19C	B	–
20C	SB	–
21C	W/L	–
42C	L/Y	–
52C	B	–

Connector No.	E48
Connector Name	REFRIGERANT PRESSURE SENSOR
Connector Color	BLACK

Terminal No.	Color of Wire	Signal Name
1	R/Y	–
2	B/W	–
3	B	–

Connector No.	E113
Connector Name	COOLING FAN MOTOR
Connector Color	WHITE

Terminal No.	Color of Wire	Signal Name
1	L	–
2	B	–

Connector No.	E116
Connector Name	CONDENSER-2
Connector Color	WHITE

Terminal No.	Color of Wire	Signal Name
1	B/Y	–
2	B	–

Connector No.	E119
Connector Name	IPDM E/R (INTELLIGENT POWER DISTRIBUTION MODULE ENGINE ROOM)
Connector Color	WHITE

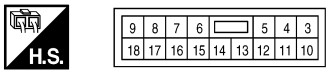

Terminal No.	Color of Wire	Signal Name
3	BR	–
4	W/L	–
6	L	–
7	W/B	–
8	R/B	–
11	Y/B	–
13	B/Y	–
17	W	–

AABIA0210GB

Connector No.	E120
Connector Name	IPDM E/R (INTELLIGENT POWER DISTRIBUTION MODULE ENGINE ROOM)
Connector Color	WHITE

Terminal No.	Color of Wire	Signal Name
22	G	–
24	L/B	–

Connector No.	E121
Connector Name	IPDM E/R (INTELLIGENT POWER DISTRIBUTION MODULE ENGINE ROOM)
Connector Color	BROWN

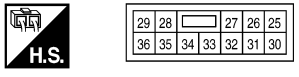

Terminal No.	Color of Wire	Signal Name
30	W	–

Connector No.	E122
Connector Name	IPDM E/R (INTELLIGENT POWER DISTRIBUTION MODULE ENGINE ROOM)
Connector Color	WHITE

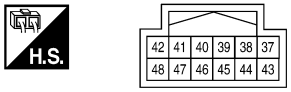

Terminal No.	Color of Wire	Signal Name
38	B	–
39	L	–
40	P	–
46	GR	–
47	O	–

Connector No.	E124
Connector Name	IPDM E/R (INTELLIGENT POWER DISTRIBUTION MODULE ENGINE ROOM)
Connector Color	BLACK

Terminal No.	Color of Wire	Signal Name
59	B	–

Connector No.	E134
Connector Name	ICC BRAKE HOLD RELAY
Connector Color	GRAY

Terminal No.	Color of Wire	Signal Name
1	B/R	–
2	B	–
3	L	–
4	R/B	–
6	R/G	–
7	R/Y	–

AABIA0211GB

Connector No.	E152
Connector Name	WIRE TO WIRE
Connector Color	WHITE

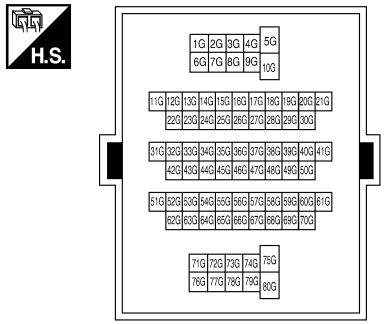

Terminal No.	Color of Wire	Signal Name
11G	G/W	–
15G	R/B	–
16G	B/R	–
17G	GR/R	–
18G	G/Y	–
19G	B	–
31G	L	–
42G	P	–
46G	R/Y	–

Connector No.	E161
Connector Name	BATTERY CURRENT SENSOR
Connector Color	BLACK

Terminal No.	Color of Wire	Signal Name
1	P	–
2	B	–
3	R	–

Connector No.	F5
Connector Name	AIR FUEL RATIO (A/F) SENSOR 1 (BANK 2)
Connector Color	GRAY

Terminal No.	Color of Wire	Signal Name
1	G/L	–
2	L/P	–
3	GR/G	–
4	R/B	–

Connector No.	F6
Connector Name	IGNITION COIL NO. 2 (WITH POWER TRANSISTOR)
Connector Color	GRAY

Terminal No.	Color of Wire	Signal Name
1	W/G	–
2	B	–
3	W/L	–

Connector No.	F7
Connector Name	IGNITION COIL NO. 4 (WITH POWER TRANSISTOR)
Connector Color	GRAY

Terminal No.	Color of Wire	Signal Name
1	W/R	–
2	B	–
3	W/L	–

AABIA0212GB

Connector No.	F8
Connector Name	IGNITION COIL NO. 6 (WITH POWER TRANSISTOR)
Connector Color	GRAY

Terminal No.	Color of Wire	Signal Name
1	V/W	–
2	B	–
3	W/L	–

Connector No.	F9
Connector Name	A/T ASSEMBLY
Connector Color	GREEN

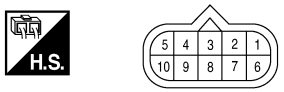

Terminal No.	Color of Wire	Signal Name
3	L	–
8	P	–
9	BR	–

Connector No.	F11
Connector Name	CRANKSHAFT POSITION SENSOR (POS)
Connector Color	BLACK

Terminal No.	Color of Wire	Signal Name
1	B	–
2	O	–
3	BR	–

Connector No.	F12
Connector Name	HEATED OXYGEN SENSOR 2 (BANK 2)
Connector Color	GREEN

Terminal No.	Color of Wire	Signal Name
1	L	–
2	O/G	–
3	R/B	–
4	B/W	–

Connector No.	F13
Connector Name	HEATED OXYGEN SENSOR 2 (BANK 1)
Connector Color	GREEN

Terminal No.	Color of Wire	Signal Name
1	R	–
2	GR	–
3	R/B	–
4	B	–

Connector No.	F14
Connector Name	WIRE TO WIRE
Connector Color	WHITE

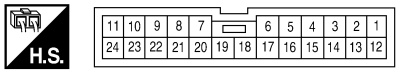

Terminal No.	Color of Wire	Signal Name
3	L	–
5	L	–
8	B	–
9	B	–
10	B	–
11	R/Y	–
14	P	–
15	P	–
16	B	–
19	B/R	–
20	R/B	–
21	B	–
22	L	–
23	SB	–
24	B/W	–

AABIA0213GB

Connector No.	F15
Connector Name	EVAP CANISTER PURGE VOLUME CONTROL SOLENOID VALVE
Connector Color	GRAY

Terminal No.	Color of Wire	Signal Name
1	BR	–
2	L/Y	–

Connector No.	F18
Connector Name	FUEL INJECTOR NO. 2
Connector Color	GRAY

Terminal No.	Color of Wire	Signal Name
1	W	–
2	L	–

Connector No.	F20
Connector Name	FUEL INJECTOR NO. 4
Connector Color	GRAY

Terminal No.	Color of Wire	Signal Name
1	W	–
2	P	–

Connector No.	F21
Connector Name	CONDENSER - 1
Connector Color	GRAY

Terminal No.	Color of Wire	Signal Name
1	W/L	–
2	B	–

Connector No.	F22
Connector Name	FUEL INJECTOR NO. 6
Connector Color	GRAY

Terminal No.	Color of Wire	Signal Name
1	W	–
2	Y/G	–

Connector No.	F23
Connector Name	CAMSHAFT POSITION SENSOR (PHASE)
Connector Color	BLACK

Terminal No.	Color of Wire	Signal Name
1	B	–
2	Y	–
3	BR	–

AABIA0214GB

Connector No.	F26
Connector Name	WIRE TO WIRE
Connector Color	BLACK

Terminal No.	Color of Wire	Signal Name
1	W	–
2	B	–
3	Y/B	–
4	B	–
5	W	–
6	B	–

Connector No.	F30
Connector Name	FUEL INJECTOR NO. 1
Connector Color	GRAY

Terminal No.	Color of Wire	Signal Name
1	W	–
2	GR/W	–

Connector No.	F31
Connector Name	FUEL INJECTOR NO. 8
Connector Color	GRAY

Terminal No.	Color of Wire	Signal Name
1	W	–
2	G	–

Connector No.	F32
Connector Name	WIRE TO WIRE
Connector Color	WHITE

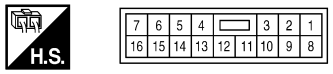

Terminal No.	Color of Wire	Signal Name
4	W	–
5	L/Y	–
6	B	–
7	L	–
9	BR	–
10	L	–
11	W/L	–
12	R	–
13	BR	–

AABIA0215GB

Connector No.	F41
Connector Name	FUEL INJECTOR NO. 3
Connector Color	GRAY

Terminal No.	Color of Wire	Signal Name
1	W	–
2	BR	–

Connector No.	F42
Connector Name	FUEL INJECTOR NO. 5
Connector Color	GRAY

Terminal No.	Color of Wire	Signal Name
1	W	–
2	O/L	–

Connector No.	F45
Connector Name	FUEL INJECTOR NO. 7
Connector Color	GRAY

Terminal No.	Color of Wire	Signal Name
1	W	–
2	O	–

Connector No.	F46
Connector Name	POWER STEERING PRESSURE SENSOR
Connector Color	BLACK

Terminal No.	Color of Wire	Signal Name
1	W/L	–
2	R	–
3	B	–

Connector No.	F47
Connector Name	IGNITION COIL NO. 1 (WITH POWER TRANSISTOR)
Connector Color	GRAY

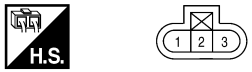

Terminal No.	Color of Wire	Signal Name
1	Y/R	–
2	B	–
3	W/L	–

Connector No.	F48
Connector Name	IGNITION COIL NO. 3 (WITH POWER TRANSISTOR)
Connector Color	GRAY

Terminal No.	Color of Wire	Signal Name
1	O/W	–
2	B	–
3	W/L	–

Connector No.	F49
Connector Name	IGNITION COIL NO. 5 (WITH POWER TRANSISTOR)
Connector Color	GRAY

Terminal No.	Color of Wire	Signal Name
1	G/R	–
2	B	–
3	W/L	–

Connector No.	F50
Connector Name	ELECTRIC THROTTLE CONTROL ACTUATOR
Connector Color	BLACK

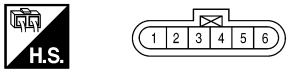

Terminal No.	Color of Wire	Signal Name
1	B	–
2	Y	–
3	W	–
4	R	–
5	L/W	–
6	L/B	–

AABIA0216GB

Connector No.	F51
Connector Name	IGNITION COIL NO. 7 (WITH POWER TRANSISTOR)
Connector Color	GRAY

Terminal No.	Color of Wire	Signal Name
1	L/R	–
2	B	–
3	W/L	–

Connector No.	F52
Connector Name	IGNITION COIL NO. 8 (WITH POWER TRANSISTOR)
Connector Color	GRAY

Terminal No.	Color of Wire	Signal Name
1	G/R	–
2	B	–
3	W/L	–

Connector No.	F53
Connector Name	MASS AIR FLOW SENSOR
Connector Color	BLACK

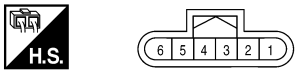

Terminal No.	Color of Wire	Signal Name
2	BR	–
3	B	–
4	W	–
5	R/B	–
6	B	–

AABIA0217GB

Connector No.	F54
Connector Name	ECM
Connector Color	BLACK

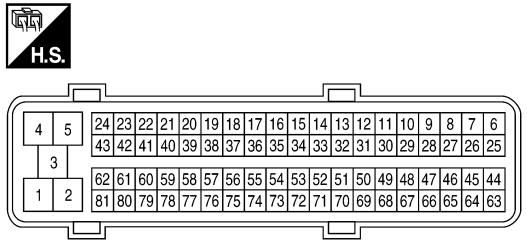

Terminal No.	Color of Wire	Signal Name
1	B	GND
2	LG/B	AF-H1
3	L	VMOT
4	L/W	MOTOR 2
5	L/B	MOTOR 1
6	GR	O2HRL
10	W	C-VTC (L)
11	LG	C-VTC (R)
12	R	PS-PRESS
13	O	POS
14	Y	PHASE
15	W	KNK1
16	G/L	A/F+2
21	O/L	INJ#5

Terminal No.	Color of Wire	Signal Name
22	BR	INJ#3
23	GR/W	INJ#1
24	GR/G	AF-H2
25	O/G	O2HRR
32	L	FTPRS
34	R/B	TA
35	BR/R	A/F+1
36	W	KNK2
38	L	FPCMCK
39	L/Y	FPCM
40	Y/G	INJ#6
41	P	INJ#4
42	L	INJ#2
43	GR/G	AF-H2
44	O	INJ#7
45	L/Y	EVAP
46	L/R	INJ#7
47	Y	AVCC2
48	SB	AVCC
49	R/Y	AVCC (PDPRES)
50	B	TPS1
51	W	QA+

Terminal No.	Color of Wire	Signal Name
53	L	VTC PUS (R)
55	R	O2SRL
56	BR/G	A/F-1
60	GR/R	IGN#5
61	O/W	IGN#3
62	Y/R	IGN#1
63	G	INJ#8
65	GR/R	IGN#8
66	R	GND-A2
67	B	GND-A
68	W/L	AVCC (PSPRES)
69	W	TPS2
70	B/W	PD PRESS
71	R	CURSEN
72	Y	VTS PUS (L)
73	Y/B	TW
74	L	O2SRR
75	L/P	A/F-2
78	B/W	GND_O2
79	V/W	IGN#6
80	W/R	IGN#4
81	W/G	IGN#2

AABIA0218GB

Connector No.	F61
Connector Name	INTAKE VALVE TIMING CONTROL SOLENOID VALVE (BANK 1)
Connector Color	GREEN

Terminal No.	Color of Wire	Signal Name
1	W	–
2	W/L	–

Connector No.	F62
Connector Name	INTAKE VALVE TIMING CONTROL POSITION SENSOR (BANK 1)
Connector Color	BLACK

Terminal No.	Color of Wire	Signal Name
1	B	–
2	Y	–
3	BR	–

Connector No.	F63
Connector Name	INTAKE VALVE TIMING CONTROL SOLENOID VALVE (BANK 2)
Connector Color	GREEN

Terminal No.	Color of Wire	Signal Name
1	LG	–
2	W/L	–

Connector No.	F64
Connector Name	INTAKE VALVE TIMING CONTROL POSITION SENSOR (BANK 2)
Connector Color	BLACK

Terminal No.	Color of Wire	Signal Name
1	B	–
2	L	–
3	BR	–

Connector No.	F65
Connector Name	AIR FUEL RATIO (A/F) SENSOR 1 (BANK 1)
Connector Color	GRAY

Terminal No.	Color of Wire	Signal Name
1	BR/R	–
2	BR/G	–
3	LG/B	–
4	R/B	–

Connector No.	F101
Connector Name	WIRE TO WIRE
Connector Color	BLACK

Terminal No.	Color of Wire	Signal Name
1	W	–
2	B	–
3	Y/B	–
4	B	–
5	W	–
6	B	–

AABIA0219GB

Connector No.	F102
Connector Name	KNOCK SENSOR (BANK 1)
Connector Color	BLACK

Terminal No.	Color of Wire	Signal Name
1	W	–
2	B	–

Connector No.	F103
Connector Name	ENGINE COOLANT TEMPERATURE SENSOR
Connector Color	GRAY

Terminal No.	Color of Wire	Signal Name
1	Y/B	–
2	B	–

Connector No.	F104
Connector Name	KNOCK SENSOR (BANK 2)
Connector Color	BLACK

Terminal No.	Color of Wire	Signal Name
1	W	–
2	B	–

Connector No.	F502
Connector Name	TCM (TRANSMISSION CONTROL MODULE)
Connector Color	GRAY

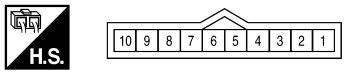

Terminal No.	Color of Wire	Signal Name
1	BR	–
2	L/Y	–
8	G	–

Connector No.	C1
Connector Name	WIRE TO WIRE
Connector Color	GRAY

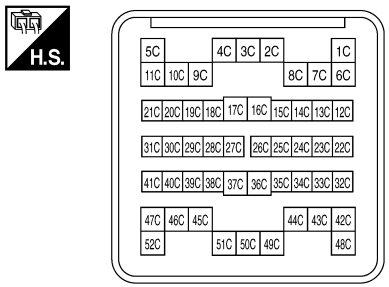

Terminal No.	Color of Wire	Signal Name
15C	V/R	–
16C	B/Y	–
18C	L	–
19C	B	–
20C	SB	–
21C	W/L	–
42C	L/Y	–
52C	B	–

AABIA0220GB

Connector No.	C4
Connector Name	EVAP CONTROL SYSTEM PRESSURE SENSOR
Connector Color	GRAY

Terminal No.	Color of Wire	Signal Name
1	B	–
2	L	–
3	SB	–

Connector No.	C5
Connector Name	FUEL LEVEL SENSOR UNIT AND FUEL PUMP
Connector Color	GRAY

Terminal No.	Color of Wire	Signal Name
1	B/Y	–
3	B	–
4	Y/R	–

Connector No.	C6
Connector Name	EVAP CANISTER VENT CONTROL VALVE
Connector Color	BLACK

Terminal No.	Color of Wire	Signal Name
1	W/L	–
2	L/Y	–

Connector No.	B17
Connector Name	ICC UNIT
Connector Color	GRAY

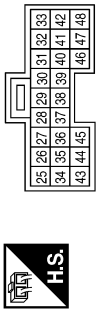

Terminal No.	Color of Wire	Signal Name
38	R/G	BNO-SW
47	BR	STP-LMP

Connector No.	B40
Connector Name	WIRE TO WIRE
Connector Color	WHITE

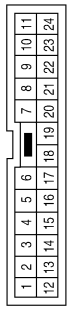

Terminal No.	Color of Wire	Signal Name
23	P	–
24	L	–

Connector No.	B69
Connector Name	WIRE TO WIRE
Connector Color	WHITE

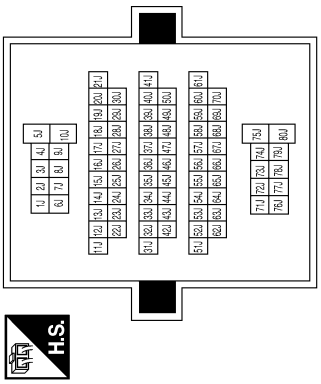

Terminal No.	Color of Wire	Signal Name
51J	L	–
52J	P	–

AABIA0221GB

Fail-Safe Chart

INFOID:0000000001351339

When the DTC listed below is detected, the ECM enters fail-safe mode and the MIL lights up.

DTC No.	Detected items	Engine operating condition in fail-safe mode
P0102 P0103	Mass air flow sensor circuit	Engine speed will not rise more than 2,400 rpm due to the fuel cut.
P0117 P0118	Engine coolant temperature sensor circuit	Engine coolant temperature will be determined by ECM based on the following condition. CONSULT-III displays the engine coolant temperature decided by ECM.
		Condition: Just as ignition switch is turned ON or START — Engine coolant temperature decided (CONSULT-III display): 40°C (104°F)
		Condition: Approx 4 minutes or more after engine starting. — Engine coolant temperature decided (CONSULT-III display): 80°C (176°F)
		Condition: Except as shown above — Engine coolant temperature decided (CONSULT-III display): 40 - 80°C (104 - 176°F) (Depends on the time)
		When the fail-safe system for engine coolant temperature sensor is activated, the cooling fan operates while engine is running.
P0122 P0123 P0222 P0223 P2135	Throttle position sensor	The ECM controls the electric throttle control actuator in regulating the throttle opening in order for the idle position to be within +10 degrees. The ECM regulates the opening speed of the throttle valve to be slower than the normal condition. So, the acceleration will be poor.
P0643	Sensor power supply	ECM stops the electric throttle control actuator control, throttle valve is maintained at a fixed opening (approx. 5 degrees) by the return spring.
P2100 P2103	Throttle control motor relay	ECM stops the electric throttle control actuator control, throttle valve is maintained at a fixed opening (approx. 5 degrees) by the return spring.
P2101	Electric throttle control function	ECM stops the electric throttle control actuator control, throttle valve is maintained at a fixed opening (approx. 5 degrees) by the return spring.
P2118	Throttle control motor	ECM stops the electric throttle control actuator control, throttle valve is maintained at a fixed opening (approx. 5 degrees) by the return spring.
P2119	Electric throttle control actuator	(When electric throttle control actuator does not function properly due to the return spring malfunction:) ECM controls the electric throttle actuator by regulating the throttle opening around the idle position. The engine speed will not rise more than 2,000 rpm.
		(When throttle valve opening angle in fail-safe mode is not in specified range:) ECM controls the electric throttle control actuator by regulating the throttle opening to 20 degrees or less.
		(When ECM detects the throttle valve is stuck open:) While the vehicle is driving, it slows down gradually by fuel cut. After the vehicle stops, the engine stalls. The engine can restart in N or P position, and engine speed will not exceed 1,000 rpm or more.
P2122 P2123 P2127 P2128 P2138	Accelerator pedal position sensor	The ECM controls the electric throttle control actuator in regulating the throttle opening in order for the idle position to be within +10 degrees. The ECM regulates the opening speed of the throttle valve to be slower than the normal condition. So, the acceleration will be poor.

- When there is an open circuit on MIL circuit, the ECM cannot warn the driver by lighting up MIL when there is malfunction on engine control system.
  Therefore, when electrical controlled throttle and part of ECM related diagnoses are continuously detected as NG for 5 trips, ECM warns the driver that engine control system malfunctions and MIL circuit is open by means of operating fail-safe function.
  The fail-safe function also operates when above diagnoses except MIL circuit are detected and demands the driver to repair the malfunction.

Engine operating condition in fail-safe mode	Engine speed will not rise more than 2,500 rpm due to the fuel cut

DTC Inspection Priority Chart

INFOID:0000000001351338

If some DTCs are displayed at the same time, perform inspections one by one based on the following priority chart.

NOTE:

- **If DTC U1000 and/or U1001 is displayed with other DTC, first perform the trouble diagnosis for DTC U1000, U1001. Refer to EC-87.**
- **If DTC U1010 is displayed with other DTC, first perform the trouble diagnosis for DTC U1010. Refer to EC-88.**

Priority	Detected items (DTC)
1	• U1000 U1001 CAN communication line • U1010 CAN communication • P0101 P0102 P0103 Mass air flow sensor • P0112 P0113 P0127 Intake air temperature sensor • P0116 P0117 P0118 P0125 Engine coolant temperature sensor • P0122 P0123 P0222 P0223 P1225 P1226 P2135 Throttle position sensor • P0128 Thermostat function • P0181 P0182 P0183 Fuel tank temperature sensor • P0327 P0328 P0332 P0333 Knock sensor • P0335 Crankshaft position sensor (POS) • P0340 Camshaft position sensor (PHASE) • P0460 P0461 P0462 P0463 Fuel level sensor • P0500 Vehicle speed sensor • P0605 ECM • P0643 Sensor power supply • P0700 TCM • P0705 Transmission range switch • P0850 Park/neutral position (PNP) switch • P1550 P1551 P1552 P1553 P1554 Battery current sensor • P1610 - P1615 NATS • P2122 P2123 P2127 P2128 P2138 Accelerator pedal position sensor

Priority	Detected items (DTC)
2	• P0031 P0032 P0051 P0052 Air fuel ratio (A/F) sensor 1 heater • P0037 P0038 P0057 P0058 Heated oxygen sensor 2 heater • P0075 P0081 Intake valve timing control solenoid valve • P0130 P0131 P0132 P0133 P0150 P0151 P0152 P0153 P2A00 P2A03 Air fuel ratio (A/F) sensor 1 • P0137 P0138 P0139 P0157 P0158 P0159 Heated oxygen sensor 2 • P0441 EVAP control system purge flow monitoring • P0443 P0444 P0445 EVAP canister purge volume control solenoid valve • P0447 P0448 EVAP canister vent control valve • P0451 P0452 P0453 EVAP control system pressure sensor • P0550 Power steering pressure sensor • P0603 ECM power supply • P0710 P0717 P0720 P0731 P0732 P0733 P0734 P0735 P0740 P0744 P0745 P1730 P1752 P1757 P1762 P1767 P1772 P1774 A/T related sensors, solenoid valves and switches • P1217 Engine over temperature (OVERHEAT) • P1140 P1145 Intake valve timing control position sensor • P1805 Brake switch • P2100 P2103 P2118 Electric throttle control actuator • P2101 Electric throttle control function
3	• P0011 P0021 Intake valve timing control • P0171 P0172 P0174 P0175 Fuel injection system function • P0300 - P0308 Misfire • P0420 P0430 Three way catalyst function • P0442 EVAP control system (SMALL LEAK) • P0455 EVAP control system (GROSS LEAK) • P0456 EVAP control system (VERY SMALL LEAK) • P0506 P0507 Idle speed control system • P1148 P1168 Closed loop control • P1211 TCS control unit • P1212 TCS communication line • P1421 Cold start control • P1564 ICC/ASCD steering switch • P1568 ICC command value • P1572 ICC/ASCD brake switch • P1574 ICC/ASCD vehicle speed sensor • P2119 Electric throttle control actuator

DTC Index

INFOID:0000000001351328

EMISSION-RELATED DIAGNOSTIC INFORMATION ITEMS

×:Applicable —: Not applicable

Items (CONSULT-III screen terms)	DTC*1		SRT code	Trip	MIL	Reference page
	CONSULT-III GST*2	ECM*3				
CAN COMM CIRCUIT	U1000	1000*5	—	1	×	EC-87
CAN COMM CIRCUIT	U1001	1001*5	—	1 or 2*9 2*10	—	EC-87
CONTROL UNIT(CAN)	U1010	1010	—	1	×	EC-88
NO DTC IS DETECTED. FURTHER TESTING MAY BE REQUIRED.	**P0000**	**0000**	—	—	**Flashing*7**	EC-55
INT/V TIM CONT-B1	P0011	0011	—	2	×	EC-40
INT/V TIM CONT-B2	P0021	0021	—	2	×	EC-40
A/F SEN1 HTR (B1)	P0031	0031	—	2	×	EC-97
A/F SEN1 HTR (B1)	P0032	0032	—	2	×	EC-97
HO2S2 HTR (B1)	P0037	0037	—	2	×	EC-100
HO2S2 HTR (B1)	P0038	0038	—	2	×	EC-100
A/F SEN1 HTR (B2)	P0051	0051	—	2	×	EC-97

Items (CONSULT-III screen terms)	DTC*1		SRT code	Trip	MIL	Reference page
	CONSULT-III GST*2	ECM*3				
A/F SEN1 HTR (B2)	P0052	0052	—	2	×	EC-97
HO2S2 HTR (B2)	P0057	0057	—	2	×	EC-100
HO2S2 HTR (B2)	P0058	0058	—	2	×	EC-100
INT/V TIM V/CIR-B1	P0075	0075	—	2	×	EC-103
INT/V TIM V/CIR-B2	P0081	0081	—	2	×	EC-103
MAF SEN/CIRCUIT-B1	P0101	0101	—	2	×	EC-106
MAF SEN/CIRCUIT-B1	P0102	0102	—	1	×	EC-113
MAF SEN/CIRCUIT-B1	P0103	0103	—	1	×	EC-113
IAT SEN/CIRCUIT-B1	P0112	0112	—	2	×	EC-118
IAT SEN/CIRCUIT-B1	P0113	0113	—	2	×	EC-118
ECT SEN/CIRC	P0116	0116	—	2	×	EC-121
ECT SEN/CIRC	P0117	0117	—	1	×	EC-124
ECT SEN/CIRC	P0118	0118	—	1	×	EC-124
TP SEN 2/CIRC-B1	P0122	0122	—	1	×	EC-128
TP SEN 2/CIRC-B1	P0123	0123	—	1	×	EC-128
ECT SENSOR	P0125	0125	—	2	×	EC-132
IAT SENSOR-B1	P0127	0127	—	2	×	EC-135
THERMSTAT FNCTN	P0128	0128	—	2	×	EC-138
A/F SENSOR1 (B1)	P0130	0130	—	2	×	EC-141
A/F SENSOR1 (B1)	P0131	0131	—	2	×	EC-145
A/F SENSOR1 (B1)	P0132	0132	—	2	×	EC-149
A/F SENSOR1 (B1)	P0133	0133	×	2	×	EC-153
HO2S2 (B1)	P0137	0137	×	2	×	EC-159
HO2S2 (B1)	P0138	0138	×	2	×	EC-164
HO2S2 (B1)	P0139	0139	×	2	×	EC-171
A/F SENSOR1 (B2)	P0150	0150	—	2	×	EC-141
A/F SENSOR1 (B2)	P0151	0151	—	2	×	EC-145
A/F SENSOR1 (B2)	P0152	0152	—	2	×	EC-149
A/F SENSOR1 (B2)	P0153	0153	×	2	×	EC-153
HO2S2 (B2)	P0157	0157	×	2	×	EC-159
HO2S2 (B2)	P0158	0158	×	2	×	EC-164
HO2S2 (B2)	P0159	0159	×	2	×	EC-171
FUEL SYS-LEAN-B1	P0171	0171	—	2	×	EC-176
FUEL SYS-RICH-B1	P0172	0172	—	2	×	EC-182
FUEL SYS-LEAN-B2	P0174	0174	—	2	×	EC-176
FUEL SYS-RICH-B2	P0175	0175	—	2	×	EC-182
FTT SENSOR	P0181	0181	—	2	×	EC-188
FTT SEN/CIRCUIT	P0182	0182	—	2	×	EC-191
FTT SEN/CIRCUIT	P0183	0183	—	2	×	EC-191
TP SEN 1/CIRC-B1	P0222	0222	—	1	×	EC-194
TP SEN 1/CIRC-B1	P0223	0223	—	1	×	EC-194
MULTI CYL MISFIRE	P0300	0300	—	2	×	EC-198

Items (CONSULT-III screen terms)	DTC*1		SRT code	Trip	MIL	Reference page
	CONSULT-III GST*2	ECM*3				
CYL 1 MISFIRE	P0301	0301	—	2	×	EC-198
CYL 2 MISFIRE	P0302	0302	—	2	×	EC-198
CYL 3 MISFIRE	P0303	0303	—	2	×	EC-198
CYL 4 MISFIRE	P0304	0304	—	2	×	EC-198
CYL 5 MISFIRE	P0305	0305	—	2	×	EC-198
CYL 6 MISFIRE	P0306	0306	—	2	×	EC-198
CYL 7 MISFIRE	P0307	0307	—	2	×	EC-198
CYL 8 MISFIRE	P0308	0308	—	2	×	EC-198
KNOCK SEN/CIRC-B1	P0327	0327	—	2	—	EC-204
KNOCK SEN/CIRC-B1	P0328	0328	—	2	—	EC-204
KNOCK SEN/CIRC-B2	P0332	0332	—	2	—	EC-204
KNOCK SEN/CIRC-B2	P0333	0333	—	2	—	EC-204
CKP SEN/CIRCUIT	P0335	0335	—	2	×	EC-207
CMP SEN/CIRC-B1	P0340	0340	—	2	×	EC-211
TW CATALYST SYS-B1	P0420	0420	×	2	×	EC-215
TW CATALYST SYS-B2	P0430	0430	×	2	×	EC-215
EVAP PURG FLOW/MON	P0441	0441	×	2	×	EC-219
EVAP SMALL LEAK	P0442	0442	×	2	×	EC-224
PURG VOLUME CONT/V	P0443	0443	—	2	×	EC-231
PURG VOLUME CONT/V	P0444	0444	—	2	×	EC-236
PURG VOLUME CONT/V	P0445	0445	—	2	×	EC-236
VENT CONTROL VALVE	P0447	0447	—	2	×	EC-239
VENT CONTROL VALVE	P0448	0448	—	2	×	EC-243
EVAP SYS PRES SEN	P0451	0451	—	2	×	EC-247
EVAP SYS PRES SEN	P0452	0452	—	2	×	EC-250
EVAP SYS PRES SEN	P0453	0453	—	2	×	EC-254
EVAP GROSS LEAK	P0455	0455	—	2	×	EC-259
EVAP VERY SML LEAK	P0456	0456	×*4	2	×	EC-266
FUEL LEV SEN SLOSH	P0460	0460	—	2	×	EC-274
FUEL LEVEL SENSOR	P0461	0461	—	2	×	EC-276
FUEL LEVL SEN/CIRC	P0462	0462	—	2	×	EC-278
FUEL LEVL SEN/CIRC	P0463	0463	—	2	×	EC-278
VEH SPEED SEN/CIRC*6	P0500	0500	—	2	×	EC-280
ISC SYSTEM	P0506	0506	—	2	×	EC-282
ISC SYSTEM	P0507	0507	—	2	×	EC-284
PW ST P SEN/CIRC	P0550	0550	—	2	—	EC-286
ECM BACK UP/CIRC	P0603	0603	—	2	×	EC-289
ECM	P0605	0605	—	1 or 2	× or —	EC-291
SENSOR POWER/CIRC	P0643	0643	—	1	×	EC-293
TRANSMISSION CONT	P0700	0700	—	1	×	TM-42
T/M RANGE SENSOR A	P0705	0705	—	2	×	TM-43
ATF TEMP SEN/CIRC	P0710	0710	—	2	×	TM-71

Items (CONSULT-III screen terms)	DTC*1		SRT code	Trip	MIL	Reference page
	CONSULT-III GST*2	ECM*3				
OUTPUT SPEED SENSOR*6	P0720	0720	—	2	×	TM-48
1GR INCORRECT RATIO	P0731	0731	—	2	×	TM-53
2GR INCORRECT RATIO	P0732	0732	—	2	×	TM-55
3GR INCORRECT RATIO	P0733	0733	—	2	×	TM-57
4GR INCORRECT RATIO	P0734	0734	—	2	×	TM-59
5GR INCORRECT RATIO	P0735	0735	—	2	×	TM-61
TORQUE CONVERTER	P0740	0740	—	2	×	TM-63
TORQUE CONVERTER	P0744	0744	—	2	×	TM-65
PC SOLENOID A	P0745	0745	—	2	×	TM-67
P-N POS SW/CIRCUIT	P0850	0850	—	2	×	EC-296
INTK TIM S/CIRC-B1	P1140	1140	—	2	×	EC-299
INTK TIM S/CIRC-B2	P1145	1145	—	2	×	EC-299
CLOSED LOOP-B1	P1148	1148	—	1	×	EC-303
CLOSED LOOP-B2	P1168	1168	—	1	×	EC-303
TCS C/U FUNCTN	P1211	1211	—	2	—	EC-304
TCS/CIRC	P1212	1212	—	2	—	EC-305
ENG OVER TEMP	P1217	1217	—	1	×	EC-36
CTP LEARNING-B1	P1225	1225	—	2	—	EC-310
CTP LEARNING-B1	P1226	1226	—	2	—	EC-312
COLD START CONTROL	P1421	1421	—	2	×	EC-314
BAT CURRENT SENSOR	P1550	1550	—	2	—	EC-316
BAT CURRENT SENSOR	P1551	1551	—	2	—	EC-320
BAT CURRENT SENSOR	P1552	1552	—	2	—	EC-320
BAT CURRENT SENSOR	P1553	1553	—	2	—	EC-324
BAT CURRENT SENSOR	P1554	1554	—	2	—	EC-328
ASCD SW	P1564	1564	—	1	—	EC-332 (Models with ICC) EC-336 (Models with ASCD)
ICC COMMAND VALUE*9	P1568	1568	—	1	—	EC-340
ASCD BRAKE SW	P1572	1572	—	1	—	EC-341 (Models with ICC) EC-347 (Models with ASCD)
ASCD VHL SPD SEN*8	P1574	1574	—	1	—	EC-352 (Models with ICC) EC-354 (Models with ASCD)
ID DISCARD IMM-ECM	P1611	1611	—	2	—	SEC-39
CHAIN OF ECM-IMMU	P1612	1612	—	2	—	SEC-35
CHAIN OF IMMU-KEY	P1614	1614	—	2	—	SEC-29

Items (CONSULT-III screen terms)	DTC*1		SRT code	Trip	MIL	Reference page
	CONSULT-III GST*2	ECM*3				
DIFFERENCE OF KEY	P1615	1615	—	2	—	SEC-32
INTERLOCK	P1730	1730	—	1	×	TM-76
IINPUT CLUTCH SOL	P1752	1752	—	1	×	TM-80
FR BRAKE SOLENOID	P1757	1757	—	1	×	TM-82
DRCT CLUTCH SOL	P1762	1762	—	1	×	TM-84
HLR CLUTCH SOLENOID	P1767	1767	—	1	×	TM-86
L C BRAKE SOLENOID	P1772	1772	—	1	×	TM-88
L C BRAKE SOLENOID	P1774	1774	—	1	×	TM-90
BRAKE SW/CIRCUIT	P1805	1805	—	2	—	EC-356
ETC MOT PWR-B1	P2100	2100	—	1	×	EC-359
ETC FUNCTION/CIRC-B1	P2101	2101	—	1	×	EC-362
ETC MOT PWR	P2103	2103	—	1	×	EC-359
ETC MOT-B1	P2118	2118	—	1	×	EC-366
ETC ACTR-B1	P2119	2119	—	1	×	EC-368
APP SEN 1/CIRC	P2122	2122	—	1	×	EC-370
APP SEN 1/CIRC	P2123	2123	—	1	×	EC-370
APP SEN 2/CIRC	P2127	2127	—	1	×	EC-373
APP SEN 2/CIRC	P2128	2128	—	1	×	EC-373
TP SENSOR-B1	P2135	2135	—	1	×	EC-377
APP SENSOR	P2138	2138	—	1	×	EC-381
A/F SENSOR1 (B1)	P2A00	2A00	—	2	×	EC-385
A/F SENSOR1 (B2)	P2A03	2A03	—	2	×	EC-385

*1: 1st trip DTC No. is the same as DTC No.
*2: This number is prescribed by SAE J2012.
*3: In Diagnostic Test Mode II (Self-diagnostic results), this number is controlled by NISSAN.
*4: SRT code will not be set if the self-diagnostic result is NG.
*5: The troubleshooting for this DTC needs CONSULT-III.
*6: When the fail-safe operations for both self-diagnoses occur, the MIL illuminates.
*7: When the ECM is in the mode of displaying SRT status, MIL may flash. For the details, refer to "How to Display SRT Status".
*8: 2WD models
*9: Models with ICC
*10: Models without ICC

Emission-related Diagnostic Information

INFOID:0000000001534998

DTC AND 1ST TRIP DTC

The 1st trip DTC (whose number is the same as the DTC number) is displayed for the latest self-diagnostic result obtained. If the ECM memory was cleared previously, and the 1st trip DTC did not reoccur, the 1st trip DTC will not be displayed.
If a malfunction is detected during the 1st trip, the 1st trip DTC is stored in the ECM memory. The MIL will not light up (two trip detection logic). If the same malfunction is not detected in the 2nd trip (meeting the required driving pattern), the 1st trip DTC is cleared from the ECM memory. If the same malfunction is detected in the 2nd trip, both the 1st trip DTC and DTC are stored in the ECM memory and the MIL lights up. In other words, the DTC is stored in the ECM memory and the MIL lights up when the same malfunction occurs in two consecutive trips. If a 1st trip DTC is stored and a non-diagnostic operation is performed between the 1st and 2nd trips, only the 1st trip DTC will continue to be stored. For malfunctions that blink or light up the MIL during the 1st trip, the DTC and 1st trip DTC are stored in the ECM memory.

Procedures for clearing the DTC and the 1st trip DTC from the ECM memory are described in "HOW TO ERASE EMISSION-RELATED DIAGNOSTIC INFORMATION".
For malfunctions in which 1st trip DTCs are displayed, refer to "EMISSION-RELATED DIAGNOSTIC INFORMATION ITEMS". These items are required by legal regulations to continuously monitor the system/component. In addition, the items monitored non-continuously are also displayed on CONSULT-III.
1st trip DTC is specified in Service $07 of SAE J1979. 1st trip DTC detection occurs without lighting up the MIL and therefore does not warn the driver of a malfunction. However, 1st trip DTC detection will not prevent the vehicle from being tested, for example during Inspection/Maintenance (I/M) tests.
When a 1st trip DTC is detected, check, print out or write down and erase (1st trip) DTC and Freeze Frame data as specified in Work Flow procedure Step 2, refer to EC-8, "Trouble Diagnosis Introduction". Then perform DTC Confirmation Procedure or Overall Function Check to try to duplicate the malfunction. If the malfunction is duplicated, the item requires repair.

How to Read DTC and 1st Trip DTC

DTC and 1st trip DTC can be read by the following methods.

With CONSULT-III

With GST

CONSULT-III or GST (Generic Scan Tool) Examples: P0340, P0850, P1148, etc.
These DTCs are prescribed by SAE J2012.
(CONSULT-III also displays the malfunctioning component or system.)

No Tools

The number of blinks of the MIL in the Diagnostic Test Mode II (Self-Diagnostic Results) indicates the DTC.
Example: 0340, 0850, 1148, etc.
These DTCs are controlled by NISSAN.

- **1st trip DTC No. is the same as DTC No.**
- **Output of a DTC indicates a malfunction. However, GST or the Diagnostic Test Mode II do not indicate whether the malfunction is still occurring or has occurred in the past and has returned to normal. CONSULT-III can identify malfunction status as shown below. Therefore, using CONSULT-III (if available) is recommended.**

DTC or 1st trip DTC of a malfunction is displayed in SELF-DIAGNOSTIC RESULTS mode of CONSULT-III. Time data indicates how many times the vehicle was driven after the last detection of a DTC.
If the DTC is being detected currently, the time data will be [0].
If a 1st trip DTC is stored in the ECM, the time data will be [1t].

FREEZE FRAME DATA AND 1ST TRIP FREEZE FRAME DATA

The ECM records the driving conditions such as fuel system status, calculated load value, engine coolant temperature, short term fuel trim, long term fuel trim, engine speed, vehicle speed, absolute throttle position, base fuel schedule and intake air temperature at the moment a malfunction is detected.
Data which are stored in the ECM memory, along with the 1st trip DTC, are called 1st trip freeze frame data. The data, stored together with the DTC data, are called freeze frame data and displayed on CONSULT-III or GST. The 1st trip freeze frame data can only be displayed on the CONSULT-III screen, not on the GST. For details, see EC-63, "CONSULT-III Function (ENGINE)".
Only one set of freeze frame data (either 1st trip freeze frame data or freeze frame data) can be stored in the ECM. 1st trip freeze frame data is stored in the ECM memory along with the 1st trip DTC. There is no priority for 1st trip freeze frame data and it is updated each time a different 1st trip DTC is detected. However, once freeze frame data (2nd trip detection/MIL on) is stored in the ECM memory, 1st trip freeze frame data is no longer stored. Remember, only one set of freeze frame data can be stored in the ECM. The ECM has the following priorities to update the data.

Priority	Items	
1	Freeze frame data	Misfire — DTC: P0300 - P0308 Fuel Injection System Function — DTC: P0171, P0172, P0174, P0175
2		Except the above items (Includes A/T related items)
3	1st trip freeze frame data	

For example, the EGR malfunction (Priority: 2) was detected and the freeze frame data was stored in the 2nd trip. After that when the misfire (Priority: 1) is detected in another trip, the freeze frame data will be updated from the EGR malfunction to the misfire. The 1st trip freeze frame data is updated each time a different malfunction is detected. There is no priority for 1st trip freeze frame data. However, once freeze frame data is stored in the ECM memory, 1st trip freeze data is no longer stored (because only one freeze frame data or 1st trip freeze frame data can be stored in the ECM). If freeze frame data is stored in the ECM memory and freeze

frame data with the same priority occurs later, the first (original) freeze frame data remains unchanged in the ECM memory.
Both 1st trip freeze frame data and freeze frame data (along with the DTCs) are cleared when the ECM memory is erased. Procedures for clearing the ECM memory are described in "HOW TO ERASE EMISSION-RELATED DIAGNOSTIC INFORMATION".

SYSTEM READINESS TEST (SRT) CODE

System Readiness Test (SRT) code is specified in Service $01 of SAE J1979.
As part of an enhanced emissions test for Inspection & Maintenance (I/M), certain states require the status of SRT be used to indicate whether the ECM has completed self-diagnosis of major emission systems and components. Completion must be verified in order for the emissions inspection to proceed.
If a vehicle is rejected for a State emissions inspection due to one or more SRT items indicating “INCMP”, use the information in this Service Manual to set the SRT to “CMPLT”.
In most cases the ECM will automatically complete its self-diagnosis cycle during normal usage, and the SRT status will indicate “CMPLT” for each application system. Once set as “CMPLT”, the SRT status remains “CMPLT” until the self-diagnosis memory is erased.
Occasionally, certain portions of the self-diagnostic test may not be completed as a result of the customer's normal driving pattern; the SRT will indicate “INCMP” for these items.
NOTE:
The SRT will also indicate “INCMP” if the self-diagnosis memory is erased for any reason or if the ECM memory power supply is interrupted for several hours.
If, during the state emissions inspection, the SRT indicates “CMPLT” for all test items, the inspector will continue with the emissions test. However, if the SRT indicates “INCMP” for one or more of the SRT items the vehicle is returned to the customer untested.
NOTE:
If MIL is ON during the state emissions inspection, the vehicle is also returned to the customer untested even though the SRT indicates “CMPLT” for all test items. Therefore, it is important to check SRT (“CMPLT”) and DTC (No DTCs) before the inspection.

SRT Item

The table below shows required self-diagnostic items to set the SRT to “CMPLT”.

SRT item (CONSULT-III indication)	Performance Priority*	Required self-diagnostic items to set the SRT to “CMPLT”	Corresponding DTC No.
CATALYST	2	Three way catalyst function	P0420, P0430
EVAP SYSTEM	2	EVAP control system purge flow monitoring	P0441
	1	EVAP control system	P0442
	2	EVAP control system	P0456
HO2S	2	Air fuel ratio (A/F) sensor 1	P0133, P0153
		Heated oxygen sensor 2	P0137, P0157
		Heated oxygen sensor 2	P0138, P0158
		Heated oxygen sensor 2	P0139, P0159

*: If completion of several SRTs is required, perform driving patterns (DTC confirmation procedure), one by one based on the priority for models with CONSULT-III.

SRT Set Timing

SRT is set as “CMPLT” after self-diagnosis has been performed one or more times. Completion of SRT is done regardless of whether the result is OK or NG. The set timing is different between OK and NG results and is shown in the table below.

Self-diagnosis result	Example	
	Diagnosis	Ignition cycle ← ON → OFF ← ON → OFF ← ON → OFF ← ON →

All OK	Case 1	P0400	OK (1)	— (1)	OK (2)	— (2)
		P0402	OK (1)	— (1)	— (1)	OK (2)
		P1402	OK (1)	OK (2)	— (2)	— (2)
		SRT of EGR	“CMPLT”	“CMPLT”	“CMPLT”	“CMPLT”
	Case 2	P0400	OK (1)	— (1)	— (1)	— (1)
		P0402	— (0)	— (0)	OK (1)	— (1)
		P1402	OK (1)	OK (2)	— (2)	— (2)
		SRT of EGR	“INCMP”	“INCMP”	“CMPLT”	“CMPLT”
NG exists	Case 3	P0400	OK	OK	—	—
		P0402	—	—	—	—
		P1402	NG	—	NG	NG (Consecutive NG)
		(1st trip) DTC	1st trip DTC	—	1st trip DTC	DTC (= MIL ON)
		SRT of EGR	“INCMP”	“INCMP”	“INCMP”	“CMPLT”

OK: Self-diagnosis is carried out and the result is OK.

NG: Self-diagnosis is carried out and the result is NG.

—: Self-diagnosis is not carried out.

When all SRT related self-diagnoses showed OK results in a single cycle (Ignition OFF-ON-OFF), the SRT will indicate “CMPLT”. → Case 1 above

When all SRT related self-diagnoses showed OK results through several different cycles, the SRT will indicate “CMPLT” at the time the respective self-diagnoses have at least one OK result. → Case 2 above

If one or more SRT related self-diagnoses showed NG results in 2 consecutive cycles, the SRT will also indicate “CMPLT”. → Case 3 above

The table above shows that the minimum number of cycles for setting SRT as “INCMP” is one (1) for each self-diagnosis (Case 1 & 2) or two (2) for one of self-diagnoses (Case 3). However, in preparation for the state emissions inspection, it is unnecessary for each self-diagnosis to be executed twice (Case 3) for the following reasons:

- The SRT will indicate “CMPLT” at the time the respective self-diagnoses have one (1) OK result.
- The emissions inspection requires “CMPLT” of the SRT only with OK self-diagnosis results.
- When, during SRT driving pattern, 1st trip DTC (NG) is detected prior to “CMPLT” of SRT, the self-diagnosis memory must be erased from ECM after repair.
- If the 1st trip DTC is erased, all the SRT will indicate “INCMP”.

  NOTE:
  SRT can be set as “CMPLT” together with the DTC(s). Therefore, DTC check must always be carried out prior to the state emission inspection even though the SRT indicates “CMPLT”.

SRT Service Procedure

If a vehicle has failed the state emissions inspection due to one or more SRT items indicating “INCMP”, review the flowchart diagnostic sequence on the next page.

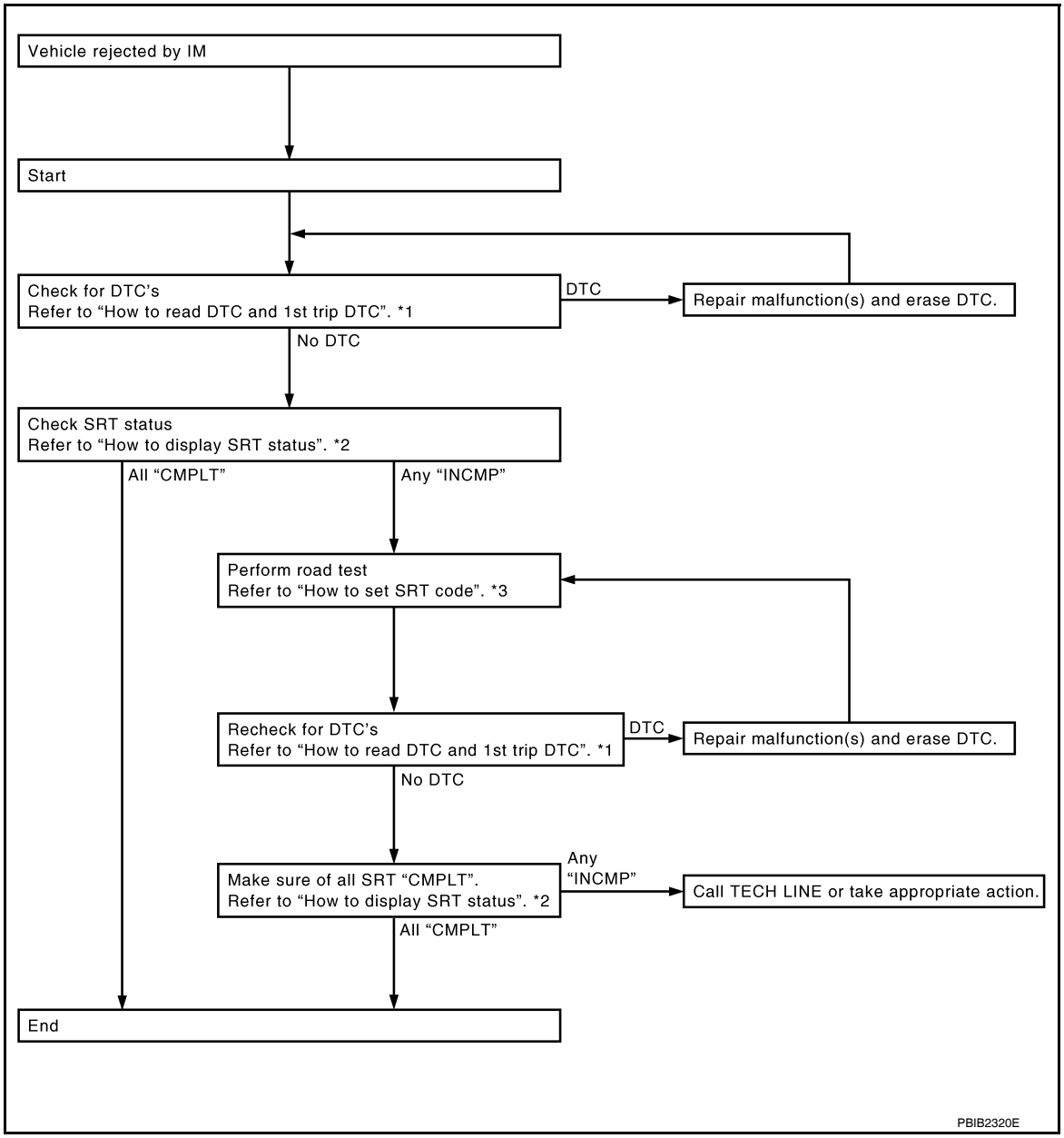

*1 "How to Read DTC and 1st Trip DTC" *2 "How to Display SRT Status" *3 "How to Set SRT Code"

How to Display SRT Status

WITH CONSULT-III

Selecting "SRT STATUS" in "DTC CONFIRMATION" mode with CONSULT-III.

For items whose SRT codes are set, a "CMPLT" is displayed on the CONSULT-III screen; for items whose SRT codes are not set, "INCMP" is displayed.

NOTE:

Though displayed on the CONSULT-III screen, "HO2S HTR" is not SRT item.

WITH GST

Selecting Service $01 with GST (Generic Scan Tool)

NO TOOLS

A SRT code itself can not be displayed while only SRT status can be.

1. Turn ignition switch ON and wait 20 seconds.
2. SRT status is indicated as shown below.
   - When all SRT codes are set, MIL lights up continuously.

- When any SRT codes are not set, MIL will flash periodically for 10 seconds.

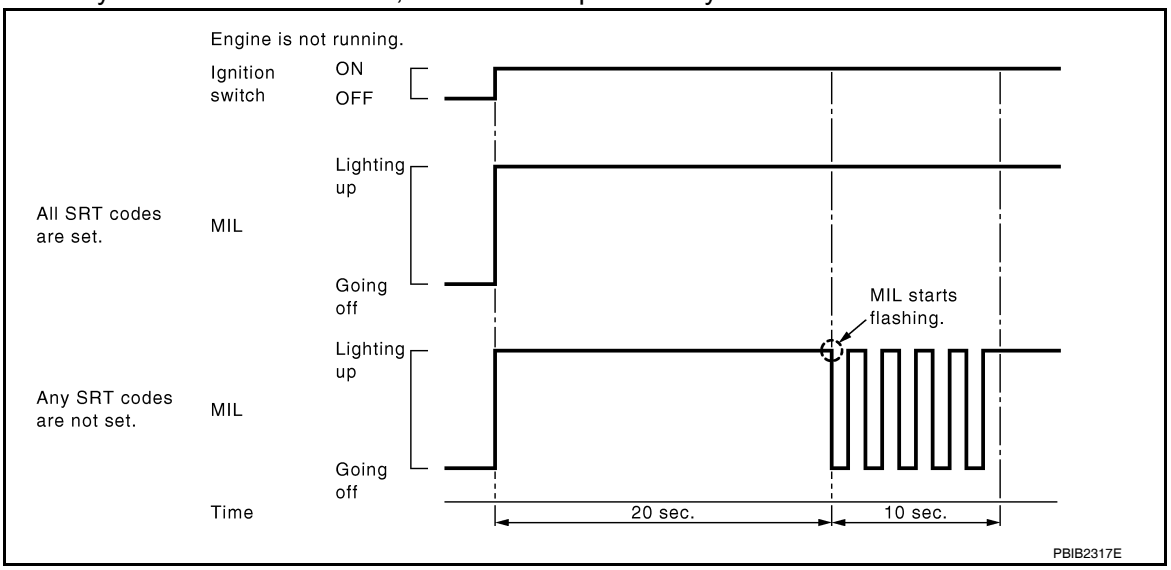

How to Set SRT Code

To set all SRT codes, self-diagnosis for the items indicated above must be performed one or more times. Each diagnosis may require a long period of actual driving under various conditions.

WITH CONSULT-III

Perform corresponding DTC Confirmation Procedure one by one based on Performance Priority in the table on "SRT Item".

WITHOUT CONSULT-III

The most efficient driving pattern in which SRT codes can be properly set is explained on the next page. The driving pattern should be performed one or more times to set all SRT codes.

Driving Pattern

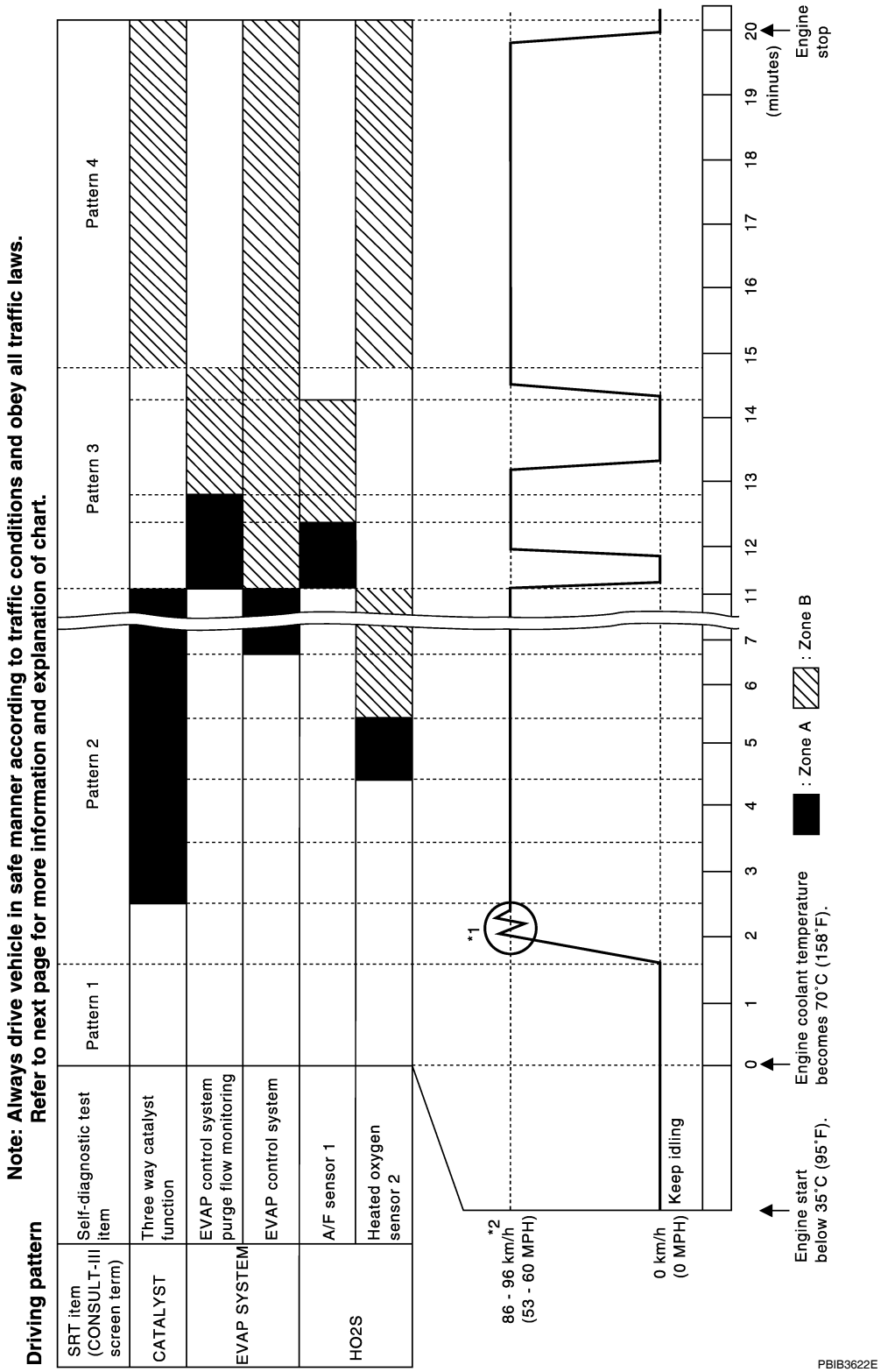

- The time required for each diagnosis varies with road surface conditions, weather, altitude, individual driving habits, etc.
  Zone A refers to the range where the time, required for the diagnosis under normal conditions*, is the shortest.
  Zone B refers to the range where the diagnosis can still be performed if the diagnosis is not completed within zone A.

*: Normal conditions refer to the following:

- Sea level
- Flat road
- Ambient air temperature: 20 - 30°C (68 - 86°F)
- Diagnosis is performed as quickly as possible under normal conditions.
  Under different conditions [For example: ambient air temperature other than 20 - 30°C (68 - 86°F)], diagnosis may also be performed.

Pattern 1:

- **The engine is started at the engine coolant temperature of −10 to 35°C (14 to 95°F) (where the voltage between the ECM terminal 73 and ground is 3.0 - 4.3V).**
- **The engine must be operated at idle speed until the engine coolant temperature is greater than 70°C (158°F) (where the voltage between the ECM terminal 73 and ground is lower than 1.4V).**
- **The engine is started at the fuel tank temperature of warmer than 0°C (32°F) (where the voltage between the ECM terminal 107 and ground is less than 4.1V).**

Pattern 2:

- When steady-state driving is performed again even after it is interrupted, each diagnosis can be conducted. In this case, the time required for diagnosis may be extended.

Pattern 3:

- Operate vehicle following the driving pattern shown in the figure.
- Release the accelerator pedal during decelerating vehicle speed from 90 km/h (56 MPH) to 0 km/h (0 MPH).

Pattern 4:

- The accelerator pedal must be held very steady during steady-state driving.
- If the accelerator pedal is moved, the test must be conducted all over again.

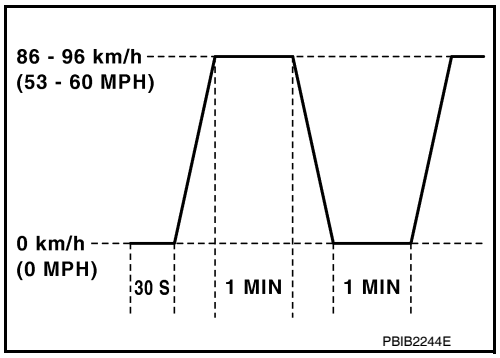

*1: Depress the accelerator pedal until vehicle speed is 90 km/h (56 MPH), then release the accelerator pedal and keep it released for more than 10 seconds. Depress the accelerator pedal until vehicle speed is 90 km/h (56 MPH) again.
*2: Checking the vehicle speed with GST is advised.

Suggested Transmission Gear Position

Set the selector lever in the D position with the overdrive switch turned ON.

TEST VALUE AND TEST LIMIT

The following is the information specified in Service $06 of SAE J1979.
The test value is a parameter used to determine whether a system/circuit diagnostic test is OK or NG while being monitored by the ECM during self-diagnosis. The test limit is a reference value which is specified as the maximum or minimum value and is compared with the test value being monitored.
These data (test value and test limit) are specified by On Boad Monitor ID(OBDMID), Test ID (TID), Unit and Scaling ID and can be displayed on the GST screen.
The items of the test value and test limit will be displayed with GST screen which items are provided by the ECM. (eg., if the bank 2 is not applied on this vehicle, only the items of the bank 1 is displayed)

Item	OBD-MID	Self-diagnostic test item	DTC	Test value and Test limit (GST display)		Description
				TID	Unit and Scaling ID	
HO2S	01H	Air fuel ratio (A/F) sensor 1 (Bank 1)	P0131	83H	0BH	Minimum sensor output voltage for test cycle
			P0131	84H	0BH	Maximum sensor output voltage for test cycle
			P0130	85H	0BH	Minimum sensor output voltage for test cycle
			P0130	86H	0BH	Maximum sensor output voltage for test cycle
			P0133	87H	04H	Response rate: Response ratio (Lean to Rich)
			P0133	88H	04H	Response rate: Response ratio (Rich to Lean)
			P2A00	89H	84H	The amount of shift in air fuel ratio
			P2A00	8AH	84H	The amount of shift in air fuel ratio
			P0130	8BH	0BH	Difference in sensor output voltage
			P0133	8CH	83H	Response gain at the limited frequency
	02H	Heated oxygen sensor 2 (Bank 1)	P0138	07H	0CH	Minimum sensor output voltage for test cycle
			P0137	08H	0CH	Maximum sensor output voltage for test cycle
			P0138	80H	0CH	Sensor output voltage
			P0139	81H	0CH	Difference in sensor output voltage
	03H	Heated oxygen sensor 3 (Bank 1)	P0143	07H	0CH	Minimum sensor output voltage for test cycle
			P0144	08H	0CH	Maximum sensor output voltage for test cycle
			P0146	80H	0CH	Sensor output voltage
			P0145	81H	0CH	Difference in sensor output voltage

Item	OBD-MID	Self-diagnostic test item	DTC	Test value and Test limit (GST display)		Description
				TID	Unit and Scaling ID	
HO2S	05H	Air fuel ratio (A/F) sensor 1 (Bank 2)	P0151	83H	0BH	Minimum sensor output voltage for test cycle
			P0151	84H	0BH	Maximum sensor output voltage for test cycle
			P0150	85H	0BH	Minimum sensor output voltage for test cycle
			P0150	86H	0BH	Maximum sensor output voltage for test cycle
			P0153	87H	04H	Response rate: Response ratio (Lean to Rich)
			P0153	88H	04H	Response rate: Response ratio (Rich to Lean)
			P2A03	89H	84H	The amount of shift in air fuel ratio
			P2A03	8AH	84H	The amount of shift in air fuel ratio
			P0150	8BH	0BH	Difference in sensor output voltage
			P0153	8CH	83H	Response gain at the limited frequency
	06H	Heated oxygen sensor 2 (Bank 2)	P0158	07H	0CH	Minimum sensor output voltage for test cycle
			P0157	08H	0CH	Maximum sensor output voltage for test cycle
			P0158	80H	0CH	Sensor output voltage
			P0159	81H	0CH	Difference in sensor output voltage
	07H	Heated oxygen sensor 3 (Bank2)	P0163	07H	0CH	Minimum sensor output voltage for test cycle
			P0164	08H	0CH	Maximum sensor output voltage for test cycle
			P0166	80H	0CH	Sensor output voltage
			P0165	81H	0CH	Difference in sensor output voltage
CATALYST	21H	Three way catalyst function (Bank1)	P0420	80H	01H	O2 storage index
			P0420	82H	01H	Switching time lag engine exhaust index value
			P2423	83H	0CH	Difference in 3rd O2 sensor output voltage
			P2423	84H	84H	O2 storage index in HC trap catalyst
	22H	Three way catalyst function (Bank2)	P0430	80H	01H	O2 storage index
			P0430	82H	01H	Switching time lag engine exhaust index value
			P2424	83H	0CH	Difference in 3rd O2 sensor output voltage
			P2424	84H	84H	O2 storage index in HC trap catalyst

Item	OBD-MID	Self-diagnostic test item	DTC	Test value and Test limit (GST display)		Description
				TID	Unit and Scaling ID	
EGR SYSTEM	31H	EGR function	P0400	80H	96H	Low Flow Faults: EGR temp change rate (short term)
			P0400	81H	96H	Low Flow Faults: EGR temp change rate (long term)
			P0400	82H	96H	Low Flow Faults: Difference between max EGR temp and EGR temp under idling condition
			P0400	83H	96H	Low Flow Faults: Max EGR temp
			P1402	84H	96H	High Flow Faults: EGR temp increase rate
EVAP SYSTEM	39H	EVAP control system leak (Cap Off)	P0455	80H	0CH	Difference in pressure sensor output voltage before and after pull down
	3BH	EVAP control system leak (Small leak)	P0442	80H	05H	Leak area index (for more than 0.04inch)
	3CH	EVAP control system (Very small leak)	P0456	80H	05H	Leak area index (for more than 0.02inch)
			P0456	81H	FDH	Maximum internal pressure of EVAP system during monitoring
	3DH	Purge flow system	P0441	83H	0CH	Difference in pressure sensor output voltage before and after vent control value close
O2 SENSOR HEATER	41H	A/F sensor 1 heater (Bank 1)	Low Input:P0031 High Input:P0032	81H	0BH	Converted value of Heater electric current to voltage
	42H	Heated oxygen sensor 2 (Bank 1)	Low Input:P0037 High Input:P0038	80H	0CH	Converted value of Heater electric current to voltage
	43H	Heated oxygen sensor 3 (Bank 1)	P0043	80H	0CH	Converted value of Heater electric current to voltage
	45H	A/F sensor 1 heater (Bank 2)	Low Input:P0051 High Input:P0052	81H	0BH	Converted value of Heater electric current to voltage
	46H	Heated oxygen sensor 2 (Bank 2)	Low Input:P0057 High Input:P0058	80H	0CH	Converted value of Heater electric current to voltage
	47H	Heated oxygen sensor 3 (Bank 2)	P0063	80H	0CH	Converted value of Heater electric current to voltage
SECONDARY AIR	71H	Secondary Air system	P0411	80H	01H	Secondary Air Injection System Incorrect Flow Detected
			Bank1: P0491 Bank2: P0492	81H	01H	Secondary Air Injection System Insufficient Flow
			P2445	82H	01H	Secondary Air Injection System Pump Stuck Off
			P2448	83H	01H	Secondary Air Injection System High Airflow
			Bank1: P2440 Bank2: P2442	84H	01H	Secondary Air Injection System Switching Valve Stuck Open
			P2440	85H	01H	Secondary Air Injection System Switching Valve Stuck Open
			P2444	86H	01H	Secondary Air Injection System Pump Stuck On

Item	OBD-MID	Self-diagnostic test item	DTC	Test value and Test limit (GST display)		Description
				TID	Unit and Scaling ID	
FUEL SYSTEM	81H	Fuel injection system function (Bank 1)	P0171 or P0172	80H	2FH	Long term fuel trim
			P0171 or P0172	81H	24H	The number of lambda control clamped
	82H	Fuel injection system function (Bank 2)	P0174 or P0175	80H	2FH	Long term fuel trim
			P0174 or P0175	81H	24H	The number of lambda control clamped

Item	OBD-MID	Self-diagnostic test item	DTC	Test value and Test limit (GST display)		Description
				TID	Unit and Scaling ID	
MISFIRE	A1H	Multiple Cylinder Misfire	P0301	80H	24H	Misfiring counter at 1000rev of the first cylinder
			P0302	81H	24H	Misfiring counter at 1000rev of the second cylinder
			P0303	82H	24H	Misfiring counter at 1000rev of the third cylinder
			P0304	83H	24H	Misfiring counter at 1000rev of the fourth cylinder
			P0305	84H	24H	Misfiring counter at 1000rev of the fifth cylinder
			P0306	85H	24H	Misfiring counter at 1000rev of the sixth cylinder
			P0307	86H	24H	Misfiring counter at 1000rev of the seventh cylinder
			P0308	87H	24H	Misfiring counter at 1000rev of the eighth cylinder
			P0300	88H	24H	Misfiring counter at 1000rev of the multiple cylinders
			P0301	89H	24H	Misfiring counter at 200rev of the first cylinder
			P0302	8AH	24H	Misfiring counter at 200rev of the second cylinder
			P0303	8BH	24H	Misfiring counter at 200rev of the third cylinder
			P0304	8CH	24H	Misfiring counter at 200rev of the fourth cylinder
			P0305	8DH	24H	Misfiring counter at 200rev of the fifth cylinder
			P0306	8EH	24H	Misfiring counter at 200rev of the fifth cylinder
			P0307	8FH	24H	Misfiring counter at 200rev of the fifth cylinder
			P0308	90H	24H	Misfiring counter at 200rev of the fifth cylinder
			P0300	91H	24H	Misfiring counter at 1000rev of the single cylinder
			P0300	92H	24H	Misfiring counter at 200rev of the single cylinder
			P0300	93H	24H	Misfiring counter at 200rev of the multiple cylinders
	A2H	No.1 Cylinder Misfire	P0301	0BH	24H	EWMA (Exponential Weighted Moving Average) misfire counts for last 10 driving cycles
			P0301	0CH	24H	Misfire counts for last/current driving cycles

Item	OBD-MID	Self-diagnostic test item	DTC	Test value and Test limit (GST display)		Description
				TID	Unit and Scaling ID	
MISFIRE	A3H	No.2 Cylinder Misfire	P0302	0BH	24H	EWMA (Exponential Weighted Moving Average) misfire counts for last 10 driving cycles
			P0302	0CH	24H	Misfire counts for last/current driving cycles
	A4H	No.3 Cylinder Misfire	P0303	0BH	24H	EWMA (Exponential Weighted Moving Average) misfire counts for last 10 driving cycles
			P0303	0CH	24H	Misfire counts for last/current driving cycles
	A5H	No.4 Cylinder Misfire	P0304	0BH	24H	EWMA (Exponential Weighted Moving Average) misfire counts for last 10 driving cycles
			P0304	0CH	24H	Misfire counts for last/current driving cycles
	A6H	No.5 Cylinder Misfire	P0305	0BH	24H	EWMA (Exponential Weighted Moving Average) misfire counts for last 10 driving cycles
			P0305	0CH	24H	Misfire counts for last/current driving cycles
	A7H	No.6 Cylinder Misfire	P0306	0BH	24H	EWMA (Exponential Weighted Moving Average) misfire counts for last 10 driving cycles
			P0306	0CH	24H	Misfire counts for last/current driving cycles
	A8H	No.7 Cylinder Misfire	P0307	0BH	24H	EWMA (Exponential Weighted Moving Average) misfire counts for last 10 driving cycles
			P0307	0CH	24H	Misfire counts for last/current driving cycles
	A9H	No.8 Cylinder Misfire	P0308	0BH	24H	EWMA (Exponential Weighted Moving Average) misfire counts for last 10 driving cycles
			P0308	0CH	24H	Misfire counts for last/current driving cycles

HOW TO ERASE EMISSION-RELATED DIAGNOSTIC INFORMATION

How to Erase DTC

WITH CONSULT-III

The emission related diagnostic information in the ECM can be erased by selecting “All Erase” in the “Description” of “FINAL CHECK” mode with CONSULT-III.

WITH GST

The emission related diagnostic information in the ECM can be erased by selecting Service $04 with GST.

NOTE:

If the DTC is not for A/T related items (see EC-462, "DTC Index"), skip step 2.

1. If the ignition switch stays ON after repair work, be sure to turn ignition switch OFF once. Wait at least 10 seconds and then turn it ON (engine stopped) again.
2. Perform TM-30, "OBD-II Diagnostic Trouble Code (DTC)". (The DTC in TCM will be erased)
3. Select Service $04 with GST (Generic Scan Tool).

No Tools

NOTE:

If the DTC is not for AT related items (see EC-462, "DTC Index"), skip step 2.

1. If the ignition switch stays ON after repair work, be sure to turn ignition switch OFF once. Wait at least 10 seconds and then turn it ON (engine stopped) again.
2. Perform TM-30, "OBD-II Diagnostic Trouble Code (DTC)". (The DTC in the TCM will be erased.)
3. Change the diagnostic test mode from Mode II to Mode I by depressing the accelerator pedal. Refer to EC-55, "Malfunction Indicator Lamp (MIL)".

- **If the battery is disconnected, the emission-related diagnostic information will be lost within 24 hours.**
- **The following data are cleared when the ECM memory is erased.**

- Diagnostic trouble codes
- 1st trip diagnostic trouble codes
- Freeze frame data
- 1st trip freeze frame data
- System readiness test (SRT) codes
- Test values

Actual work procedures are explained using a DTC as an example. Be careful so that not only the DTC, but all of the data listed above, are cleared from the ECM memory during work procedures.

SYMPTOM DIAGNOSIS

ENGINE CONTROL SYSTEM SYMPTOMS

Symptom Matrix Chart

INFOID:0000000001351340

SYSTEM — BASIC ENGINE CONTROL SYSTEM

		SYMPTOM													Refer-ence page
		HARD/NO START/RESTART (EXCP. HA)	ENGINE STALL	HESITATION/SURGING/FLAT SPOT	SPARK KNOCK/DETONATION	LACK OF POWER/POOR ACCELERATION	HIGH IDLE/LOW IDLE	ROUGH IDLE/HUNTING	IDLING VIBRATION	SLOW/NO RETURN TO IDLE	OVERHEATS/WATER TEMPERATURE HIGH	EXCESSIVE FUEL CONSUMPTION	EXCESSIVE OIL CONSUMPTION	BATTERY DEAD (UNDER CHARGE)	
Warranty symptom code		AA	AB	AC	AD	AE	AF	AG	AH	AJ	AK	AL	AM	HA	
Fuel	Fuel pump circuit	1	1	2	3	2		2	2			3		2	EC-402
	Fuel pressure regulator system	3	3	4	4	4	4	4	4	4		4			EC-494
	Injector circuit	1	1	2	3	2		2	2			2			EC-399
	Evaporative emission system	3	3	4	4	4	4	4	4	4		4			EC-37
Air	Positive crankcase ventilation system	3	3	4	4	4	4	4	4	4		4	1		EC-421
	Incorrect idle speed adjustment						1	1	1	1		1			EC-13
	Electric throttle control actuator	1	1	2	3	3	2	2	2	2		2		2	EC-359, EC-362 , EC-366 , EC-368
Ignition	Incorrect ignition timing adjustment	3	3	1	1	1		1	1			1			EC-13
	Ignition circuit	1	1	2	2	2		2	2			2			EC-411
Main power supply and ground circuit		2	2	3	3	3		3	3		2	3			EC-83

	SYMPTOM													
	HARD/NO START/RESTART (EXCP. HA)	ENGINE STALL	HESITATION/SURGING/FLAT SPOT	SPARK KNOCK/DETONATION	LACK OF POWER/POOR ACCELERATION	HIGH IDLE/LOW IDLE	ROUGH IDLE/HUNTING	IDLING VIBRATION	SLOW/NO RETURN TO IDLE	OVERHEATS/WATER TEMPERATURE HIGH	EXCESSIVE FUEL CONSUMPTION	EXCESSIVE OIL CONSUMPTION	BATTERY DEAD (UNDER CHARGE)	Refer-ence page
Warranty symptom code	AA	AB	AC	AD	AE	AF	AG	AH	AJ	AK	AL	AM	HA	
Mass air flow sensor circuit	1	1	1	2	2		2	2			2			EC-106, EC-113
Engine coolant temperature sensor circuit	1	1	1	3	2	3	2	2	3		2			EC-124, EC-132
Air fuel ratio (A/F) sensor 1 circuit		1	2	3	2		2	2			2			EC-141, EC-145 , EC-149 , EC-153 , EC-385
Throttle position sensor circuit		1	1		2	2	2	2	2		2			EC-128, EC-194 , EC-310 , EC-312 , EC-377
Accelerator pedal position sensor circuit			3	2	1	2			2					EC-289, EC-370 , EC-373 , EC-381
Knock sensor circuit			2								3			EC-204
Crankshaft position sensor (POS) circuit	2	2												EC-207
Camshaft position sensor (PHASE) circuit	3	2												EC-211
Vehicle speed signal circuit		2	3		3						3			EC-280
Power steering pressure sensor circuit		2					3	3						EC-286
ECM	2	2	3	3	3	3	3	3	3	3	3			EC-289, EC-291
Intake valve timing control solenoid valve circuit		3	2		1	3	2	2	3		3			EC-103
Park/Neutral position (PNP) signal circuit			3		3		3	3			3			EC-296
Refrigerant pressure sensor circuit		2				3			3		4			EC-423
Electrical load signal circuit							3							EC-397
Air conditioner circuit	2	2	3	3	3	3	3	3	3		3		2	HAC-24
ABS actuator and electric unit (control unit)			4											BRC-37

1 - 6: The numbers refer to the order of inspection.

(continued on next page)

SYSTEM — ENGINE MECHANICAL & OTHER

		SYMPTOM													Reference page
		HARD/NO START/RESTART (EXCP. HA)	ENGINE STALL	HESITATION/SURGING/FLAT SPOT	SPARK KNOCK/DETONATION	LACK OF POWER/POOR ACCELERATION	HIGH IDLE/LOW IDLE	ROUGH IDLE/HUNTING	IDLING VIBRATION	SLOW/NO RETURN TO IDLE	OVERHEATS/WATER TEMPERATURE HIGH	EXCESSIVE FUEL CONSUMPTION	EXCESSIVE OIL CONSUMPTION	BATTERY DEAD (UNDER CHARGE)	
Warranty symptom code		AA	AB	AC	AD	AE	AF	AG	AH	AJ	AK	AL	AM	HA	
Fuel	Fuel tank	5	5												FL-11
	Fuel piping			5	5	5		5	5			5			FL-6
	Vapor lock														—
	Valve deposit	5		5	5	5		5	5			5			—
	Poor fuel (Heavy weight gasoline, Low octane)														—
Air	Air duct		5	5		5		5	5			5			EM-25
	Air cleaner														EM-25
	Air leakage from air duct (Mass air flow sensor — electric throttle control actuator)	5			5		5			5					EM-25
	Electric throttle control actuator														EM-26
	Air leakage from intake manifold/ Collector/Gasket														EM-26
Cranking	Battery	1	1	1		1		1	1			1		1	PG-73
	Generator circuit														CHG-8
	Starter circuit	3													STR-8
	Signal plate	6													EM-45
	Park/Neutral position (PNP) signal	4													TM-43
Engine	Cylinder head	5	5	5	5	5		5	5			5			EM-68
	Cylinder head gasket										4		3		
	Cylinder block	6	6	6	6	6		6	6			6	4		EM-82
	Piston														
	Piston ring														
	Connecting rod														
	Bearing														
	Crankshaft														
Valve mechanism	Timing chain	5	5	5	5	5		5	5			5			EM-45
	Camshaft														EM-53
	Intake valve timing control														EM-53
	Intake valve												3		EM-68
	Exhaust valve														

		SYMPTOM													Reference page
		HARD/NO START/RESTART (EXCP. HA)	ENGINE STALL	HESITATION/SURGING/FLAT SPOT	SPARK KNOCK/DETONATION	LACK OF POWER/POOR ACCELERATION	HIGH IDLE/LOW IDLE	ROUGH IDLE/HUNTING	IDLING VIBRATION	SLOW/NO RETURN TO IDLE	OVERHEATS/WATER TEMPERATURE HIGH	EXCESSIVE FUEL CONSUMPTION	EXCESSIVE OIL CONSUMPTION	BATTERY DEAD (UNDER CHARGE)	
Warranty symptom code		AA	AB	AC	AD	AE	AF	AG	AH	AJ	AK	AL	AM	HA	
Exhaust	Exhaust manifold/Tube/Muffler/Gasket	5	5	5	5	5		5	5			5			EM-30, EX-5
	Three way catalyst														
Lubrication	Oil pan/Oil strainer/Oil pump/Oil filter/Oil gallery/Oil cooler	5	5	5	5	5		5	5			5			EM-33, LU-14 , LU-11 , LU-12
	Oil level (Low)/Filthy oil														LU-8, "Inspection"
Cooling	Radiator/Hose/Radiator filler cap	5	5	5	5	5		5	5		4	5			CO-15
	Thermostat									5					CO-22
	Water pump														CO-20
	Water gallery														CO-6
	Cooling fan									5					CO-18,CO-19
	Coolant level (Low)/Contaminated coolant									5					CO-10
IVIS (INFINITI Vehicle Immobilizer System — NATS)		1	1												SEC-8

1 - 6: The numbers refer to the order of inspection.

NORMAL OPERATING CONDITION

Fuel Cut Control (at No Load and High Engine Speed)

INFOID:0000000001351235

INPUT/OUTPUT SIGNAL CHART

Sensor	Input signal to ECM	ECM function	Actuator
TCM	Neutral position	Fuel cut control	Fuel injector
Accelerator pedal position sensor	Accelerator pedal position		
Engine coolant temperature sensor	Engine coolant temperature		
Crankshaft position sensor (POS) Camshaft position sensor (PHASE)	Engine speed		
Wheel sensor	Vehicle speed*		

*: This signal is sent to the ECM through CAN communication line.

SYSTEM DESCRIPTION

If the engine speed is above 1,800 rpm under no load (for example, the shift position is neutral and engine speed over is 1,800 rpm) fuel will be cut off after some time. The exact time when the fuel is cut off varies based on engine speed.
Fuel cut will be operated until the engine speed reaches 1,500 rpm, then fuel cut will be cancelled.
NOTE:
This function is different from deceleration control listed under EC-28, "System Description".

PRECAUTION

PRECAUTIONS

Precaution for Supplemental Restraint System (SRS) "AIR BAG" and "SEAT BELT PRE-TENSIONER"

INFOID:0000000006054103

The Supplemental Restraint System such as “AIR BAG” and “SEAT BELT PRE-TENSIONER”, used along with a front seat belt, helps to reduce the risk or severity of injury to the driver and front passenger for certain types of collision. This system includes seat belt switch inputs and dual stage front air bag modules. The SRS system uses the seat belt switches to determine the front air bag deployment, and may only deploy one front air bag, depending on the severity of a collision and whether the front occupants are belted or unbelted.
Information necessary to service the system safely is included in the SR and SB section of this Service Manual.

WARNING:

- **To avoid rendering the SRS inoperative, which could increase the risk of personal injury or death in the event of a collision which would result in air bag inflation, all maintenance must be performed by an authorized NISSAN/INFINITI dealer.**
- **Improper maintenance, including incorrect removal and installation of the SRS, can lead to personal injury caused by unintentional activation of the system. For removal of Spiral Cable and Air Bag Module, see the SR section.**
- **Do not use electrical test equipment on any circuit related to the SRS unless instructed to in this Service Manual. SRS wiring harnesses can be identified by yellow and/or orange harnesses or harness connectors.**

PRECAUTIONS WHEN USING POWER TOOLS (AIR OR ELECTRIC) AND HAMMERS

WARNING:

- **When working near the Airbag Diagnosis Sensor Unit or other Airbag System sensors with the Ignition ON or engine running, DO NOT use air or electric power tools or strike near the sensor(s) with a hammer. Heavy vibration could activate the sensor(s) and deploy the air bag(s), possibly causing serious injury.**
- **When using air or electric power tools or hammers, always switch the Ignition OFF, disconnect the battery, and wait at least 3 minutes before performing any service.**

Precaution Necessary for Steering Wheel Rotation After Battery Disconnect

INFOID:0000000006211820

NOTE:

- This Procedure is applied only to models with Intelligent Key system and NATS (NISSAN ANTI-THEFT SYSTEM).
- Remove and install all control units after disconnecting both battery cables with the ignition knob in the ″LOCK″ position.
- Always use CONSULT-III to perform self-diagnosis as a part of each function inspection after finishing work. If DTC is detected, perform trouble diagnosis according to self-diagnostic results.

For models equipped with the Intelligent Key system and NATS, an electrically controlled steering lock mechanism is adopted on the key cylinder.
For this reason, if the battery is disconnected or if the battery is discharged, the steering wheel will lock and steering wheel rotation will become impossible.
If steering wheel rotation is required when battery power is interrupted, follow the procedure below before starting the repair operation.

OPERATION PROCEDURE

1. Connect both battery cables.
   NOTE:
   Supply power using jumper cables if battery is discharged.
2. Use the Intelligent Key or mechanical key to turn the ignition switch to the ″ACC″ position. At this time, the steering lock will be released.
3. Disconnect both battery cables. The steering lock will remain released and the steering wheel can be rotated.
4. Perform the necessary repair operation.

5. When the repair work is completed, return the ignition switch to the "LOCK" position before connecting the battery cables. (At this time, the steering lock mechanism will engage.)
6. Perform a self-diagnosis check of all control units using CONSULT-III.

On Board Diagnosis (OBD) System of Engine and A/T

INFOID:0000000001351222

The ECM has an on board diagnostic system. It will light up the malfunction indicator lamp (MIL) to warn the driver of a malfunction causing emission deterioration.

CAUTION:

- **Be sure to turn the ignition switch OFF and disconnect the negative battery cable before any repair or inspection work. The open/short circuit of related switches, sensors, solenoid valves, etc. will cause the MIL to light up.**
- **Be sure to connect and lock the connectors securely after work. A loose (unlocked) connector will cause the MIL to light up due to the open circuit. (Be sure the connector is free from water, grease, dirt, bent terminals, etc.)**
- **Certain systems and components, especially those related to OBD, may use a new style slide-locking type harness connector. For description and how to disconnect, refer to PG-65.**
- **Be sure to route and secure the harnesses properly after work. The interference of the harness with a bracket, etc. may cause the MIL to light up due to the short circuit.**
- **Be sure to connect rubber tubes properly after work. A misconnected or disconnected rubber tube may cause the MIL to light up due to the malfunction of the EVAP system or fuel injection system, etc.**
- **Be sure to erase the unnecessary malfunction information (repairs completed) from the ECM and TCM (Transmission control module) before returning the vehicle to the customer.**

Precaution

INFOID:0000000006211821

- **Always use a 12 volt battery as power source.**
- **Do not attempt to disconnect battery cables while engine is running.**
- **Before connecting or disconnecting the ECM harness connector, turn ignition switch OFF and disconnect negative battery cable. Failure to do so may damage the ECM because battery voltage is applied to ECM even if ignition switch is turned OFF.**
- **Before removing parts, turn ignition switch OFF and then disconnect negative battery cable.**

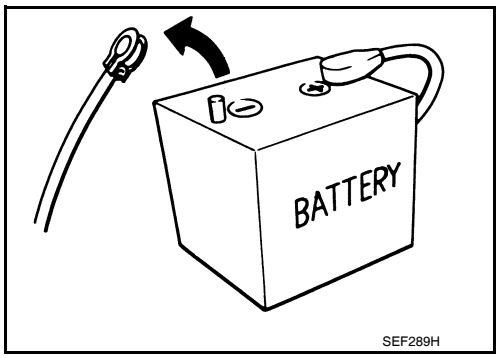

- **Do not disassemble ECM.**
- **If a battery cable is disconnected, the memory will return to the ECM value.**
  The ECM will now start to self-control at its initial value. Engine operation can vary slightly when the terminal is disconnected. However, this is not an indication of a malfunction. Do not replace parts because of a slight variation.
- **If the battery is disconnected, the following emission-related diagnostic information will be lost within 24 hours.**

- **Diagnostic trouble codes**
- **1st trip diagnostic trouble codes**
- **Freeze frame data**
- **1st trip freeze frame data**
- **System readiness test (SRT) codes**
- **Test values**
- **<Flexible Fuel Vehicle>**
  Presumed ethanol mixture ratio

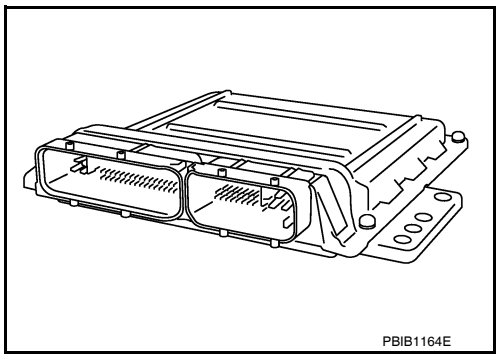

- **When connecting ECM harness connector, fasten it securely with a lever as far as it will go as shown in the figure.**

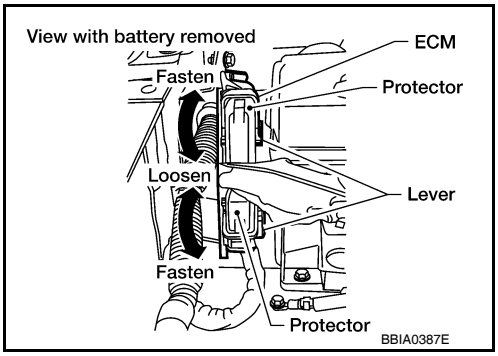

- **When connecting or disconnecting pin connectors into or from ECM, take care not to damage pin terminals (bend or break).**
  Make sure that there are not any bends or breaks on ECM pin terminal, when connecting pin connectors.
- **Securely connect ECM harness connectors.**
  A poor connection can cause an extremely high (surge) voltage to develop in coil and condenser, thus resulting in damage to ICs.
- **Keep engine control system harness at least 10 cm (4 in) away from adjacent harness, to prevent engine control system malfunctions due to receiving external noise, degraded operation of ICs, etc.**
- **Keep engine control system parts and harness dry.**
- **Before replacing ECM, perform ECM Terminals and Reference Value inspection and make sure ECM functions properly. Refer to EC-429, "ECM Terminal and Reference Value".**
- **Handle mass air flow sensor carefully to avoid damage.**
- **Do not disassemble mass air flow sensor.**
- **Do not clean mass air flow sensor with any type of detergent.**
- **Do not disassemble electric throttle control actuator.**
- **Even a slight leak in the air intake system can cause serious incidents.**
- **Do not shock or jar the camshaft position sensor (PHASE), crankshaft position sensor (POS).**

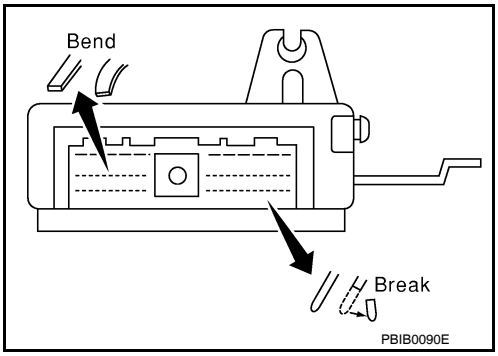

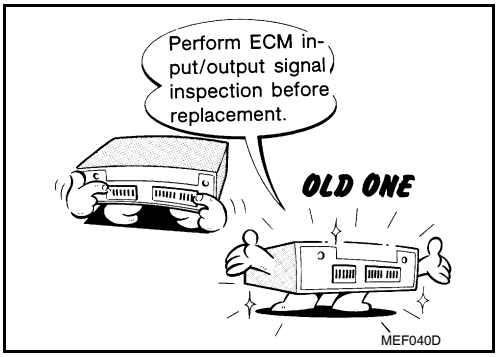

- **After performing each TROUBLE DIAGNOSIS, perform DTC Confirmation Procedure or Overall Function Check.**
  The DTC should not be displayed in the DTC Confirmation Procedure if the repair is completed. The Overall Function Check should be a good result if the repair is completed.

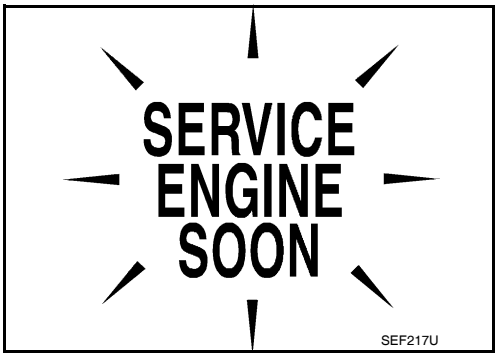

- **When measuring ECM signals with a circuit tester, never allow the two tester probes to contact.**
  Accidental contact of probes will cause a short circuit and damage the ECM power transistor.
- **Do not use ECM ground terminals when measuring input/output voltage. Doing so may result in damage to the ECM's transistor. Use a ground other than ECM terminals, such as the ground.**

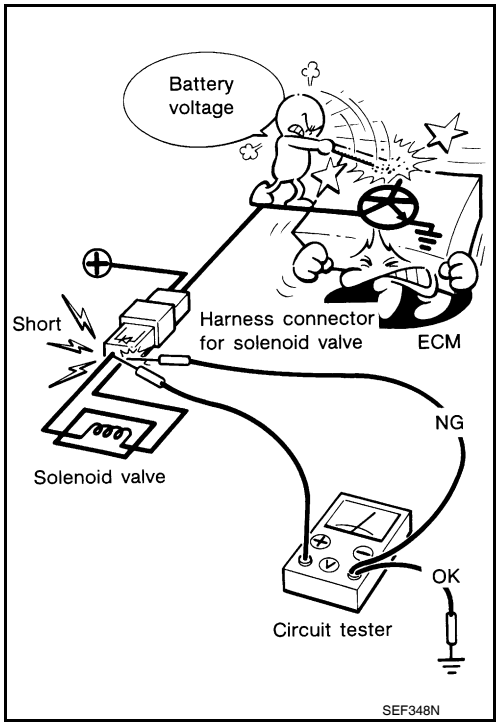

- **B1 indicates the bank 1, B2 indicates the bank 2 as shown in the figure.**

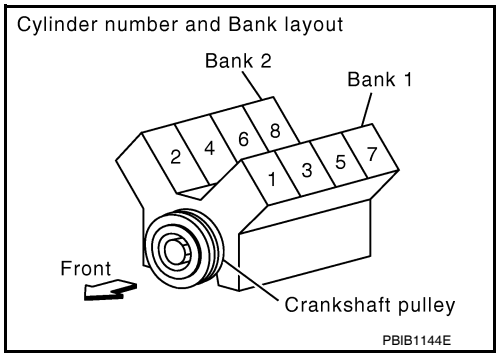

- **Do not operate fuel pump when there is no fuel in lines.**
- **Tighten fuel hose clamps to the specified torque.**

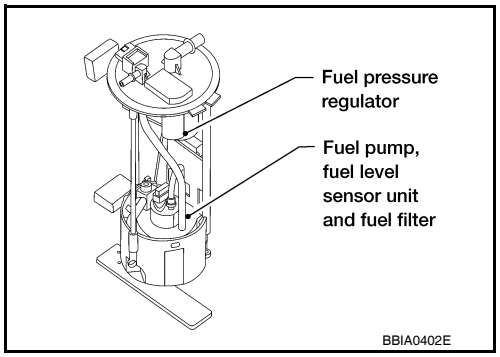

- **Do not depress accelerator pedal when starting.**
- **Immediately after starting, do not rev up engine unnecessarily.**
- **Do not rev up engine just prior to shutdown.**

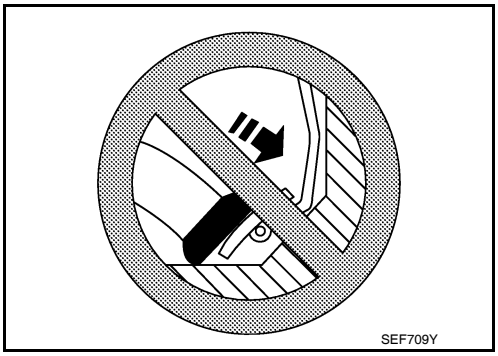

- **When installing C.B. ham radio or a mobile phone, be sure to observe the following as it may adversely affect electronic control systems depending on installation location.**
  - **Keep the antenna as far as possible from the electronic control units.**
  - **Keep the antenna feeder line more than 20 cm (8 in) away from the harness of electronic controls.**
    Do not let them run parallel for a long distance.
  - **Adjust the antenna and feeder line so that the standing-wave radio can be kept smaller.**
  - **Be sure to ground the radio to vehicle body.**

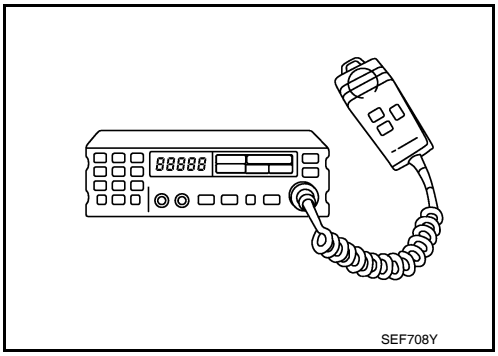

PREPARATION

PREPARATION

Special Service Tool

INFOID:0000000001351224

The actual shapes of Kent-Moore tools may differ from those of special service tools illustrated here.

Tool number (Kent-Moore No.) Tool name	Description	
EG17650301 (J-33984-A) Radiator cap tester adapter	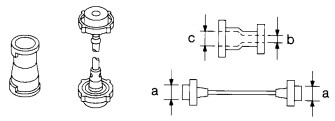 S-NT564	Adapting radiator cap tester to radiator cap and radiator filler neck **a: 28 (1.10) dia.** **b: 31.4 (1.236) dia.** **c: 41.3 (1.626) dia.** Unit: mm (in)
KV10117100 (J-36471-A) Heated oxygen sensor wrench	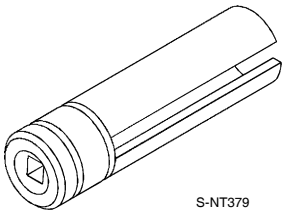 S-NT379	Loosening or tightening heated oxygen sensors with 22 mm (0.87 in) hexagon nut
KV10114400 (J-38365) Heated oxygen sensor wrench	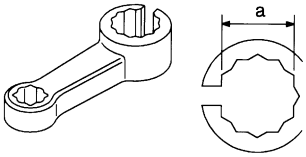 S-NT636	Loosening or tightening heated oxygen sensors **a: 22 mm (0.87 in)**
(J-44626) Air fuel ratio (A/F) sensor wrench	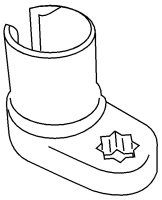 LEM054	Loosening or tightening air fuel ratio (A/F) sensor 1
(J-44321) Fuel pressure gauge kit	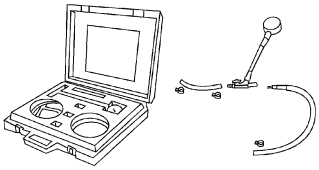 LEC642	Checking fuel pressure
(J-44321-6) Fuel pressure adapter	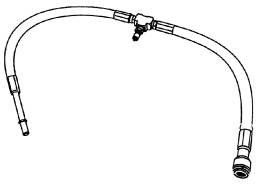 LBIA0376E	Connecting fuel pressure gauge to quick connector type fuel lines.

Tool number (Kent-Moore No.) Tool name	Description	
(J-45488) Quick connector release	PBIC0198E	Remove fuel tube quick connectors in engine room.
(J-23688) Engine coolant refractometer	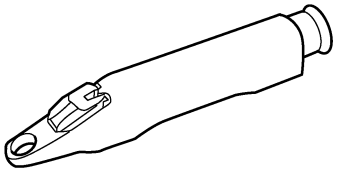 WBIA0539E	Checking concentration of ethylene glycol in engine coolant

Commercial Service Tool

INFOID:0000000001351225

Tool name (Kent-Moore No.)	Description	
Leak detector i.e.: (J-41416)	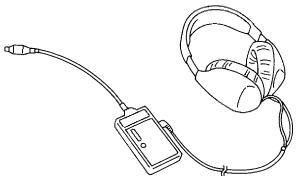 S-NT703	Locating the EVAP leak
EVAP service port adapter i.e.: (J-41413-OBD)	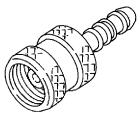 S-NT704	Applying positive pressure through EVAP service port
Fuel filler cap adapter i.e.: (MLR-8382)	S-NT815	Checking fuel tank vacuum relief valve opening pressure
Socket wrench	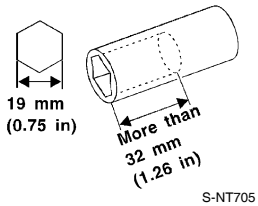 S-NT705	Removing and installing engine coolant temperature sensor

Tool name (Kent-Moore No.)	Description	
Oxygen sensor thread cleaner i.e.: (J-43897-18) (J-43897-12)	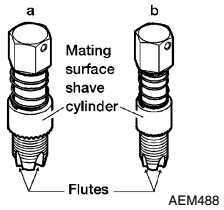	Reconditioning the exhaust system threads before installing a new oxygen sensor. Use with anti-seize lubricant shown below. **a: 18 mm diameter with pitch 1.5 mm for Zirconia Oxygen Sensor** **b: 12 mm diameter with pitch 1.25 mm for Titania Oxygen Sensor**
Anti-seize lubricant i.e.: (Permatex™ 133AR or equivalent meeting MIL specification MIL-A-907)		Lubricating oxygen sensor thread cleaning tool when reconditioning exhaust system threads.

ON-VEHICLE MAINTENANCE

FUEL PRESSURE

Fuel Pressure Check

INFOID:0000000001351336

FUEL PRESSURE RELEASE

With CONSULT-III

1. Turn ignition switch ON.
2. Perform “FUEL PRESSURE RELEASE” in “WORK SUPPORT” mode with CONSULT-III.
3. Start engine.
4. After engine stalls, crank it two or three times to release all fuel pressure.
5. Turn ignition switch OFF.

Without CONSULT-III

1. Remove fuel pump fuse located in IPDM E/R.
2. Start engine.
3. After engine stalls, crank it two or three times to release all fuel pressure.
4. Turn ignition switch OFF.
5. Reinstall fuel pump fuse after servicing fuel system.

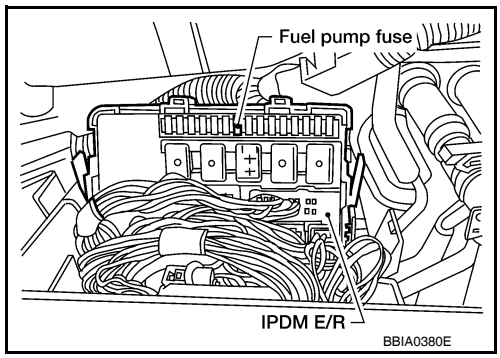

FUEL PRESSURE CHECK

CAUTION:

- **Before disconnecting fuel line, release fuel pressure from fuel line to eliminate danger.**
- **Be careful not to scratch or get the fuel hose connection area dirty when servicing, so that the quick connector o-ring maintains sealability.**
- **Use Fuel Pressure Gauge Kit J-44321 and Fuel Pressure Adapter J-44321-6 to check fuel pressure.**
- **Do not perform fuel pressure check with electrical system operating (i.e. lights, rear defog, A/C, etc.). Fuel pressure gauge may indicate false readings due to varying engine loads and changes in manifold vacuum.**

NOTE:

Prepare pans or saucers under the disconnected fuel line because the fuel may spill out. The fuel pressure cannot be completely released because JA60 models do not have fuel return system.

1. Release fuel pressure to zero. Refer to "FUEL PRESSURE RELEASE".
2. Remove engine cover.
3. Remove fuel hose using Quick Connector Release J-45488. Refer to EM-26.
   - Do not twist or kink fuel hose because it is plastic hose.
   - Do not remove fuel hose from quick connector.
   - Keep fuel hose connections clean.
4. Install Fuel Pressure Adapter J-44321-6 and Fuel Pressure Gauge (from kit J-44321) as shown in figure.
   - Do not distort or bend fuel rail tube when installing fuel pressure gauge adapter.
   - When reconnecting fuel hose, check the original fuel hose for damage and abnormality.
5. Turn ignition switch ON (reactivate fuel pump), and check for fuel leakage.
6. Start engine and check for fuel leakage.
7. Read the indication of fuel pressure gauge.
   - During fuel pressure check, check for fuel leakage from fuel connection every 3 minutes.

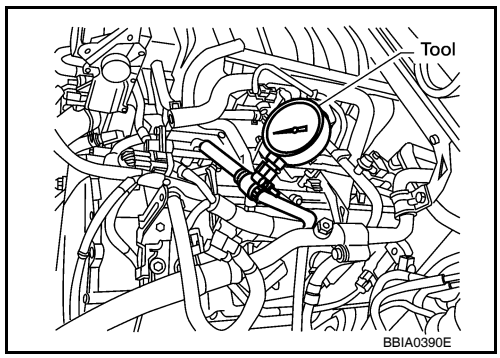

At idling: Approximately 350 kPa (3.57 kg/cm^2, 51 psi)

8. If result is unsatisfactory, go to next step.
9. Check the following.
   - Fuel hoses and fuel tubes for clogging
   - Fuel filter for clogging
   - Fuel pump
   - Fuel pressure regulator for clogging

   If OK, replace fuel pressure regulator.
   If NG, repair or replace.
10. Before disconnecting Fuel Pressure Gauge and Fuel Pressure Adapter J-44321-6, release fuel pressure to zero. Refer to "FUEL PRESSURE RELEASE".

EVAP LEAK CHECK

How to Detect Fuel Vapor Leakage

INFOID:0000000001351309

CAUTION:
- **Never use compressed air or a high pressure pump.**
- **Do not exceed 4.12 kPa (0.042 kg/cm^2, 0.6 psi) of pressure in EVAP system.**

NOTE:
- Do not start engine.
- Improper installation of EVAP service port adapter to the EVAP service port may cause a leak.

WITH CONSULT-III

1. Attach the EVAP service port adapter securely to the EVAP service port.
2. Also attach the pressure pump and hose to the EVAP service port adapter.
3. Turn ignition switch ON.
4. Select the “EVAP SYSTEM CLOSE” of “WORK SUPPORT MODE” with CONSULT-III.
5. Touch “START”. A bar graph (Pressure indicating display) will appear on the screen.
6. Apply positive pressure to the EVAP system until the pressure indicator reaches the middle of the bar graph.
7. Remove EVAP service port adapter and hose with pressure pump.
8. Locate the leak using a leak detector. Refer to EC-37, "Description".

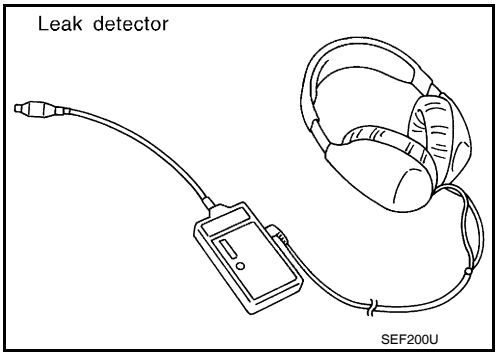

WITHOUT CONSULT-III

1. Attach the EVAP service port adapter securely to the EVAP service port.

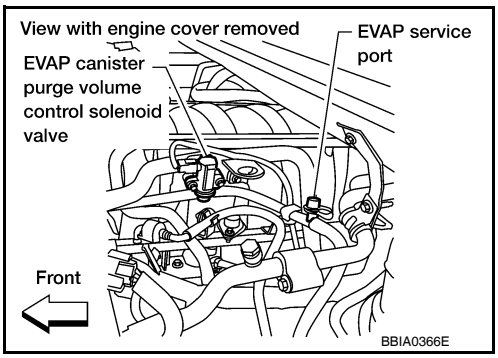

2. Also attach the pressure pump with pressure gauge to the EVAP service port adapter.

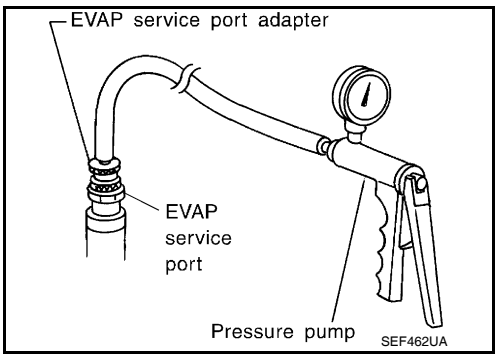

3. Apply battery voltage between the terminals of EVAP canister vent control valve to make a closed EVAP system.

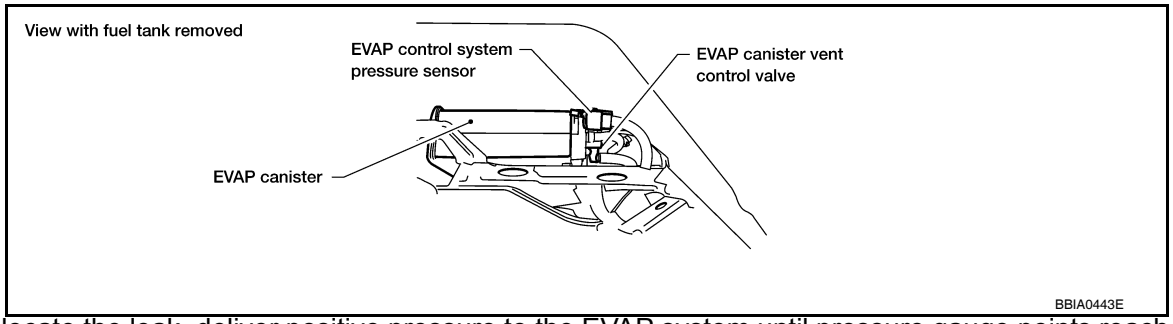

4. To locate the leak, deliver positive pressure to the EVAP system until pressure gauge points reach 1.38 to 2.76 kPa (0.014 to 0.028 kg/cm^2, 0.2 to 0.4 psi).
5. Remove EVAP service port adapter and hose with pressure pump.
6. Locate the leak using a leak detector. Refer to EC-37, "Description".

ON-VEHICLE REPAIR

EVAP CANISTER

Component Inspection

INFOID:0000000006054101

EVAP CANISTER

Check EVAP canister as follows:

1. Block port **(B)**.
2. Blow air into port **(A)** and confirm that it flows freely out of port **(C)**.
3. Release blocked port **(B)**.
4. Apply vacuum pressure to port **(B)** and confirm that vacuum pressure exists at the ports **(A)** and **(C)**.
5. Block port **(A)** and **(B)**.
6. Apply pressure to port **(C)** and check that there is no leakage.

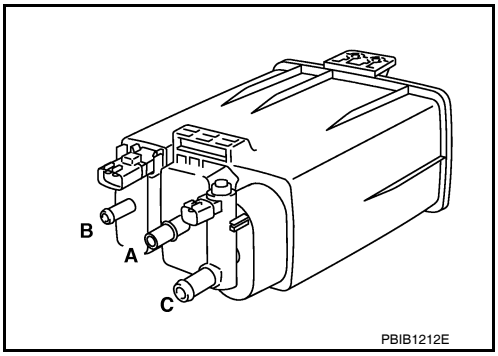

Removal and Installation

INFOID:0000000006211822

EVAP CANISTER

Tighten EVAP canister as shown in the figure.

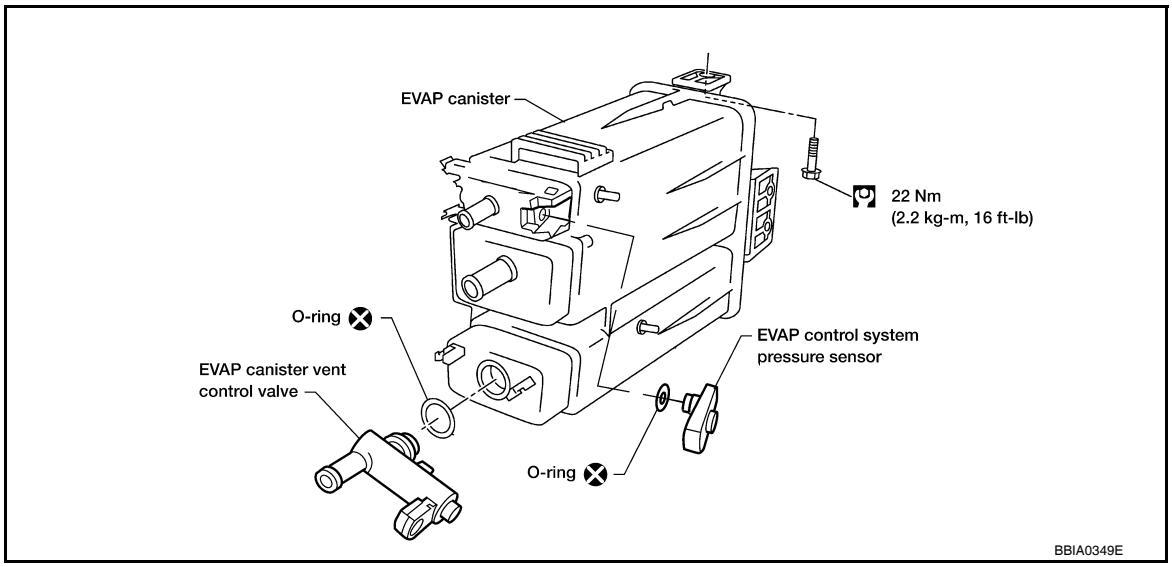

: N·m (kg-m, ft-lb)

REMOVAL

1. Remove the left rear wheel and tire using power tool.
2. Disconnect the EVAP canister control pressure sensor hose.
3. Disconnect the EVAP canister control pressure sensor connector
4. Remove the EVAP canister control pressure sensor and O-ring, if necessary.
5. Disconnect the fuel tank EVAP breather hose.
6. Remove the seat belt latch anchor.
7. Disconnect the EVAP canister vent control valve connector.
8. Disconnect the EVAP canister vent control valve hose.
9. Remove the EVAP canister retaining bolt.
10. Remove the EVAP canister.
11. Remove the EVAP canister vent control valve and O-ring, if necessary.

Installation

Installation is in the reverse order of removal.

CAUTION:

Always replace O-rings with a new one.

EVAP CANISTER CONTROL PRESSURE SENSOR

REMOVAL

1. Remove the left rear wheel and tire using power tool.
2. Disconnect the fuel tank EVAP breather hose.
3. Disconnect the EVAP canister control pressure sensor connector.
4. Remove the EVAP canister control pressure sensor and O-ring.

Installation

Installation is in the reverse order of removal.

CAUTION:

Always replace O-ring with a new one.

EVAP CANISTER VENT CONTROL VALVE

REMOVAL

1. Remove the left rear wheel and tire using power tool.
2. Disconnect the EVAP canister vent control valve connector.
3. Disconnect the EVAP canister vent control valve hose.
4. Turn EVAP canister vent control valve counterclockwise.
5. Remove the EVAP canister vent control valve and O-ring.

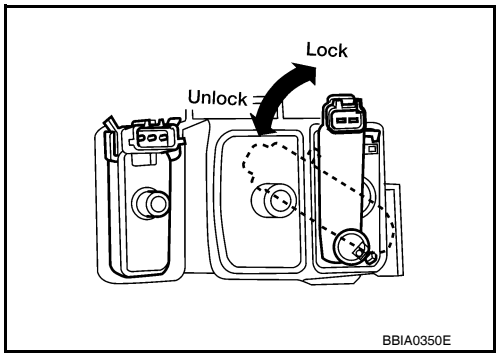

Installation

Installation is in the reverse order of removal.

CAUTION:

Always replace O-ring with a new one.

INTAKE VALVE TIMING CONTROL

Intake Valve Timing Control Solenoid Valve (LH)

INFOID:0000000001830643

REMOVAL

1. Remove engine room cover using power tool. Refer to EM-24, "Removal and Installation".
2. Remove air duct and resonator assembly. Refer to EM-24, "Removal and Installation".
3. Remove drive belt. Refer to EM-13, "Removal and Installation".
4. Disconnect Intake valve timing controlintake valve timing control solenoid valve connector (LH).
5. Remove Intake valve timing control solenoid valve (LH) (2) from Intake valve timing control solenoid valve cover (LH) (1).

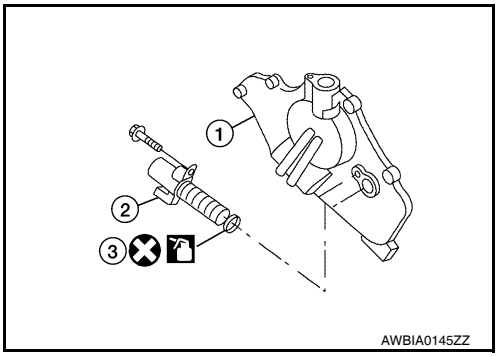

INSTALLATION

Installation is in the reverse order of removal.

CAUTION:

Replace the O-ring (3) of the Intake valve timing control solenoid valve with a new one, then lubricate O-ring with engine oil before installing.

Intake valve timing control solenoid valve bolt	**: 9.6 N·m (0.98 kg-m, 85 in-lb)**

Intake Valve Timing Control Solenoid Valve (RH)

INFOID:0000000001830644

REMOVAL

1. Remove drive belt. Refer to EM-13, "Removal and Installation".
2. Disconnect Intake valve timing control solenoid valve connector (RH).
3. Remove Intake valve timing control solenoid valve (RH) (3) from Intake valve timing control solenoid valve cover (RH) (1).

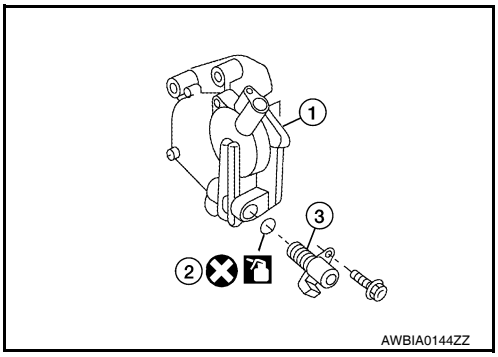

INSTALLATION

Installation is in the reverse order of removal.

CAUTION:

Replace the O-ring (2) of the Intake valve timing control solenoid valve with a new one, then lubricate O-ring with engine oil before installing.

Intake valve timing control solenoid valve bolt	**: 9.6 N·m (0.98 kg-m, 85 in-lb)**

Intake Valve Timing Control Position Sensor (LH)

INFOID:0000000001830645

REMOVAL

1. Remove engine room cover using power tool. Refer to EM-24, "Removal and Installation".
2. Remove air duct and resonator assembly. Refer to EM-25, "Removal and Installation".
3. Disconnect intake valve timing control position sensor connector (LH).
4. Remove intake valve timing control position sensor (LH) (1) from Intake valve timing control solenoid valve cover (LH) (3).

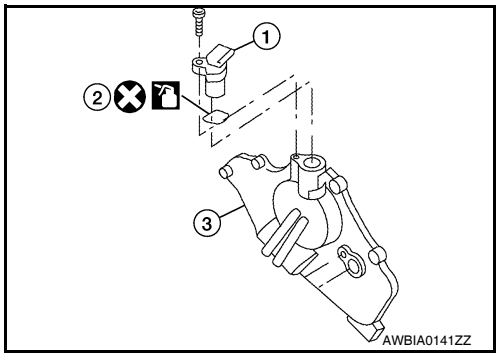

INSTALLATION

Installation is in the reverse order of removal.

CAUTION:

Replace the O-ring (2) of the intake valve timing control position sensor with a new one, then lubricate O-ring with engine oil before installing.

Intake valve timing control position sensor bolt : 9.6 N·m (0.98 kg-m, 85 in-lb)

Intake Valve Timing Control Position Sensor (RH)

INFOID:0000000001830646

REMOVAL

1. Remove engine room cover using power tool. Refer to EM-24, "Removal and Installation".
2. Disconnect intake valve timing control position sensor connector (RH).
3. Remove intake valve timing control position sensor (RH) (1) from Intake valve timing control solenoid valve cover (RH) (3).

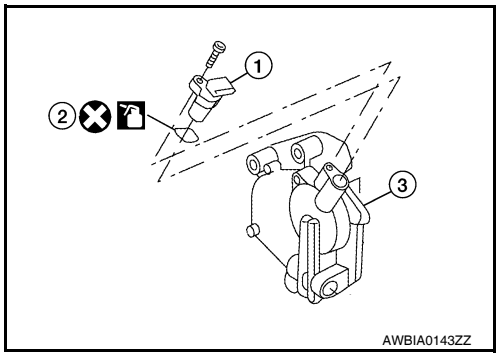

INSTALLATION

Installation is in the reverse order of removal.

CAUTION:

Replace the O-ring (2) of the intake valve timing control position sensor with a new one, then lubricate O-ring with engine oil before installing.

Intake valve timing control position sensor bolt : 9.6 N·m (0.98 kg-m, 85 in-lb)

Camshaft Position Sensor (PHASE)

INFOID:0000000001830647

REMOVAL

1. Remove engine room cover using power tool. Refer to EM-24, "Removal and Installation".
2. Remove air duct and resonator assembly. Refer to EM-25, "Removal and Installation".
3. Disconnect camshaft position sensor connector.

4. Remove camshaft position sensor (2) from Intake valve timing control solenoid valve cover (LH) (1).

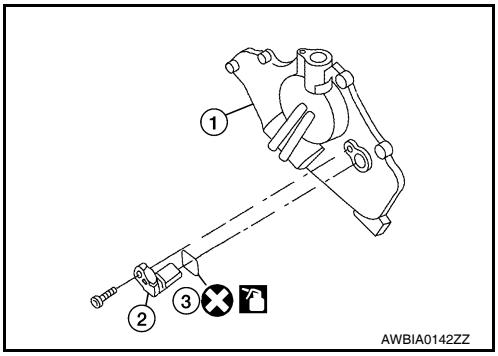

INSTALLATION

Installation is in the reverse order of removal.

CAUTION:

Replace the O-ring (3) of the camshaft position sensor with a new one, then lubricate O-ring with engine oil before installing.

Camshaft position sensor bolt : 9.6 N·m (0.98 kg-m, 85 in-lb)

SERVICE DATA AND SPECIFICATIONS (SDS)

SERVICE DATA AND SPECIFICATIONS (SDS)

Fuel Pressure

INFOID:0000000001366032

Fuel pressure at idling kPa (kg/cm^2, psi)	Approximately 350 (3.57, 51)

Idle Speed and Ignition Timing

INFOID:0000000001366033

Target idle speed	No-load* (in P or N position)	650±50 rpm
Air conditioner: ON	In P or N position	700 rpm or more
Ignition timing	In P or N position	15° ± 5° BTDC

*: Under the following conditions:

- Air conditioner switch: OFF
- Electric load: OFF (Lights and heater fan)
- Steering wheel: Kept in straight-ahead position

Calculated Load Value

INFOID:0000000001366034

Condition	Calculated load value % (Using CONSULT-III or GST)
At idle	14.0 - 33.0
At 2,500 rpm	12.0 - 25.0

Mass Air Flow Sensor

INFOID:0000000001366035

Supply voltage	Battery voltage (11 - 14V)
Output voltage at idle	1.0 - 1.3V*
Mass air flow (Using CONSULT-III or GST)	3.0 - 9.0 g·m/sec at idle* 9.0 - 28.0 g·m/sec at 2,500 rpm*

*: Engine is warmed up to normal operating temperature and running under no load.

Intake Air Temperature Sensor

INFOID:0000000001366036

Temperature °C (°F)	Resistance kΩ
25 (77)	1.800 - 2.200

Engine Coolant Temperature Sensor

INFOID:0000000001366037

Temperature °C (°F)	Resistance kΩ
20 (68)	2.1 - 2.9
50 (122)	0.68 - 1.00
90 (194)	0.236 - 0.260

A/F Sensor 1 Heater

INFOID:0000000001366038

Resistance [at 25°C (77°F)]	1.98 - 2.66Ω

Heated Oxygen sensor 2 Heater

INFOID:0000000001366039

Resistance [at 25°C (77°F)]	8 - 10Ω

Crankshaft Position Sensor (POS)

INFOID:0000000001366040

Refer to EC-209, "Component Inspection".

Camshaft Position Sensor (PHASE)

INFOID:0000000001366041

Refer to EC-213, "Component Inspection".

Throttle Control Motor

INFOID:0000000001366042

Resistance [at 25°C (77°F)]	Approximately 1 - 15Ω

Fuel Injector

INFOID:0000000001366043

Resistance [at 10 - 60°C (50 - 140°F)]	11.1 - 14.5Ω

Fuel Pump

INFOID:0000000001366044

Resistance [at 25°C (77°F)]	0.2 - 5.0Ω