SECTION SEC
SECURITY CONTROL SYSTEM

CONTENTS

WITH INTELLIGENT KEY SYSTEM

PRECAUTION 4

PRECAUTIONS 4
Precaution for Supplemental Restraint System (SRS) "AIR BAG" and "SEAT BELT PRE-TENSIONER" 4

SYSTEM DESCRIPTION 5

COMPONENT PARTS 5
Component Parts Location 5
Component Description 6
CVT Shift Selector (Park Position Switch) 6
BCM 6
ECM 7
IPDM E/R 7
NATS Antenna Amp. 7
Combination Meter 7
Door Switch 7
Outside Key Antenna 7
Hood Switch 7
Inside Key Antenna 7
Remote Keyless Entry Receiver 7
Intelligent Key 7
Push-button Ignition Switch 7
Security Indicator Lamp 8
Starter Control Relay 8
Starter Relay 8
Stop Lamp Switch 8
Transmission Range Switch 8
Vehicle Information Display 8

SYSTEM 9

INTELLIGENT KEY SYSTEM/ENGINE START FUNCTION 9
INTELLIGENT KEY SYSTEM/ENGINE START FUNCTION : System Diagram 9
INTELLIGENT KEY SYSTEM/ENGINE START FUNCTION : System Description 9

INFINITI VEHICLE IMMOBILIZER SYSTEM-NATS 11
INFINITI VEHICLE IMMOBILIZER SYSTEM-NATS : System Diagram 12
INFINITI VEHICLE IMMOBILIZER SYSTEM-NATS : System Description 12

VEHICLE SECURITY SYSTEM 14
VEHICLE SECURITY SYSTEM : System Diagram 14
VEHICLE SECURITY SYSTEM : System Description 14

DIAGNOSIS SYSTEM (BCM) 18

COMMON ITEM 18
COMMON ITEM : CONSULT Function (BCM - COMMON ITEM) 18

INTELLIGENT KEY 19
INTELLIGENT KEY : CONSULT Function (BCM - INTELLIGENT KEY) 19

THEFT ALM 22
THEFT ALM : CONSULT Function (BCM - THEFT ALM) 22

IMMU 23
IMMU : CONSULT Function (BCM - IMMU) 23

DIAGNOSIS SYSTEM (IPDM E/R) 24
CONSULT Function (IPDM E/R) 24

ECU DIAGNOSIS INFORMATION 26

ECM, IPDM E/R, BCM 26
List of ECU Reference 26

WIRING DIAGRAM 27

ENGINE START FUNCTION 27
Wiring Diagram 27

INFINITI VEHICLE IMMOBILIZER SYSTEM-NATS 44

Wiring Diagram 44

VEHICLE SECURITY SYSTEM 57
Wiring Diagram 57

BASIC INSPECTION 75

DIAGNOSIS AND REPAIR WORK FLOW 75
Work Flow 75

ADDITIONAL SERVICE WHEN REPLACING CONTROL UNIT 78

ECM 78
ECM : Description 78
ECM : Work Procedure 78

BCM 78
BCM : Description 78
BCM : Work Procedure 78

DTC/CIRCUIT DIAGNOSIS 80

P1610 LOCK MODE 80
Description 80
DTC Logic 80
Diagnosis Procedure 80

P1611 ID DISCORD, IMMU-ECM 81
DTC Logic 81
Diagnosis Procedure 81

P1612 CHAIN OF ECM-IMMU 82
DTC Logic 82
Diagnosis Procedure 82

P1614 CHAIN OF IMMU-KEY 83
DTC Logic 83
Diagnosis Procedure 83

B210B STARTER CONTROL RELAY 85
DTC Logic 85
Diagnosis Procedure 85

B210C STARTER CONTROL RELAY 86
DTC Logic 86
Diagnosis Procedure 86

B210D STARTER RELAY 88
DTC Logic 88
Diagnosis Procedure 88

B210E STARTER RELAY 90
DTC Logic 90
Diagnosis Procedure 90

B210F TRANSMISSION RANGE SWITCH 92
Description 92
DTC Logic 92
Diagnosis Procedure 92

B2110 TRANSMISSION RANGE SWITCH 95
Description 95
DTC Logic 95
Diagnosis Procedure 95

B2190 NATS ANTENNA AMP. 98
Description 98
DTC Logic 98
Diagnosis Procedure 98

B2191, P1615 DIFFERENCE OF KEY 100
Description 100
DTC Logic 100
Diagnosis Procedure 100

B2192 ID DISCORD, IMMU-ECM 101
DTC Logic 101
Diagnosis Procedure 101

B2193 CHAIN OF ECM-IMMU 102
DTC Logic 102
Diagnosis Procedure 102

B2195 ANTI-SCANNING 103
DTC Logic 103
Diagnosis Procedure 103

B2196 DONGLE UNIT 104
Description 104
DTC Logic 104
Diagnosis Procedure 104

B2198 NATS ANTENNA AMP. 106
DTC Logic 106
Diagnosis Procedure 106

B2555 STOP LAMP 108
DTC Logic 108
Diagnosis Procedure 108
Component Inspection 110

B2556 PUSH-BUTTON IGNITION SWITCH ... 111
DTC Logic 111
Diagnosis Procedure 111
Component Inspection 112

B2557 VEHICLE SPEED 113
DTC Logic 113
Diagnosis Procedure 113

B2560 STARTER CONTROL RELAY 114
Description 114
DTC Logic 114
Diagnosis Procedure 114

B2601 SHIFT POSITION 115
DTC Logic 115
Diagnosis Procedure 115
Component Inspection 117

B2602 SHIFT POSITION 118
DTC Logic 118
Diagnosis Procedure 118
Component Inspection 119

B2603 SHIFT POSITION 121
DTC Logic 121
Diagnosis Procedure 121
Component Inspection 124

B2604 SHIFT POSITION 125
DTC Logic 125
Diagnosis Procedure 125

B2605 SHIFT POSITION 128
DTC Logic 128
Diagnosis Procedure 128

B2608 STARTER RELAY 131
DTC Logic 131
Diagnosis Procedure 131

B2617 STARTER RELAY CIRCUIT 133
Description 133
DTC Logic 133
Diagnosis Procedure 133

B261E VEHICLE TYPE 135
Description 135
DTC Logic 135
Diagnosis Procedure 135

B26F3 STARTER CONTROL RELAY 137
DTC Logic 137
Diagnosis Procedure 137

B26F4 STARTER CONTROL RELAY 138
DTC Logic 138
Diagnosis Procedure 138

B26F7 BCM 139
DTC Logic 139
Diagnosis Procedure 139

B26F8 BCM 140
DTC Logic 140
Diagnosis Procedure 140

HEADLAMP FUNCTION 141
Component Function Check 141
Diagnosis Procedure 141

HOOD SWITCH 142
Component Function Check 142
Diagnosis Procedure 142
Component Inspection 143

HORN FUNCTION 144
Component Function Check 144
Diagnosis Procedure 144
Component Inspection 146

SECURITY INDICATOR LAMP 147
Component Function Check 147
Diagnosis Procedure 147

SYMPTOM DIAGNOSIS 149

ENGINE DOES NOT START WHEN INTELLIGENT KEY IS INSIDE OF VEHICLE 149
Description 149
Diagnosis Procedure 149

SECURITY INDICATOR LAMP DOES NOT TURN ON OR BLINK 150
Description 150
Diagnosis Procedure 150

VEHICLE SECURITY SYSTEM CANNOT BE SET 151

INTELLIGENT KEY 151
INTELLIGENT KEY : Description 151
INTELLIGENT KEY : Diagnosis Procedure 151

DOOR REQUEST SWITCH 151
DOOR REQUEST SWITCH : Description 151
DOOR REQUEST SWITCH : Diagnosis Procedure 151

DOOR KEY CYLINDER 152
DOOR KEY CYLINDER : Description 152
DOOR KEY CYLINDER : Diagnosis Procedure 152

VEHICLE SECURITY ALARM DOES NOT ACTIVATE 153
Description 153
Diagnosis Procedure 153

PANIC ALARM FUNCTION DOES NOT OPERATE 154
Description 154
Diagnosis Procedure 154

REMOVAL AND INSTALLATION 155

NATS ANTENNA AMP. 155
Exploded View 155
Removal and Installation 155

PUSH-BUTTON IGNITION SWITCH 156
Exploded View 156
Removal and Installation 156

ANTI-THEFT HORN 157
Removal and Installation - Anti-Theft 157

IMMOBILIZER CONTROL MODULE 158
Removal and Installation 158

PRECAUTION

PRECAUTIONS

Precaution for Supplemental Restraint System (SRS) "AIR BAG" and "SEAT BELT PRE-TENSIONER"

INFOID:0000000011135238

The Supplemental Restraint System such as “AIR BAG” and “SEAT BELT PRE-TENSIONER”, used along with a front seat belt, helps to reduce the risk or severity of injury to the driver and front passenger for certain types of collision. This system includes dual stage front air bag modules. The SRS system may only deploy one front air bag, depending on the severity of a collision and whether the front passenger seat is occupied. Information necessary to service the system safely is included in the SR and SB section of this Service Manual.

WARNING:

- **To avoid rendering the SRS inoperative, which could increase the risk of personal injury or death in the event of a collision which would result in air bag inflation, all maintenance must be performed by an authorized NISSAN/INFINITI dealer.**
- **Improper maintenance, including incorrect removal and installation of the SRS, can lead to personal injury caused by unintentional activation of the system. For removal of Spiral Cable and Air Bag Module, see the SR section.**
- **Do not use electrical test equipment on any circuit related to the SRS unless instructed to in this Service Manual. SRS wiring harnesses can be identified by yellow and/or orange harnesses or harness connectors.**

PRECAUTIONS WHEN USING POWER TOOLS (AIR OR ELECTRIC) AND HAMMERS

WARNING:

- **When working near the Airbag Diagnosis Sensor Unit or other Airbag System sensors with the Ignition ON or engine running, DO NOT use air or electric power tools or strike near the sensor(s) with a hammer. Heavy vibration could activate the sensor(s) and deploy the air bag(s), possibly causing serious injury.**
- **When using air or electric power tools or hammers, always switch the Ignition OFF, disconnect the battery, and wait at least three minutes before performing any service.**

SYSTEM DESCRIPTION

COMPONENT PARTS

Component Parts Location

INFOID:0000000011135239

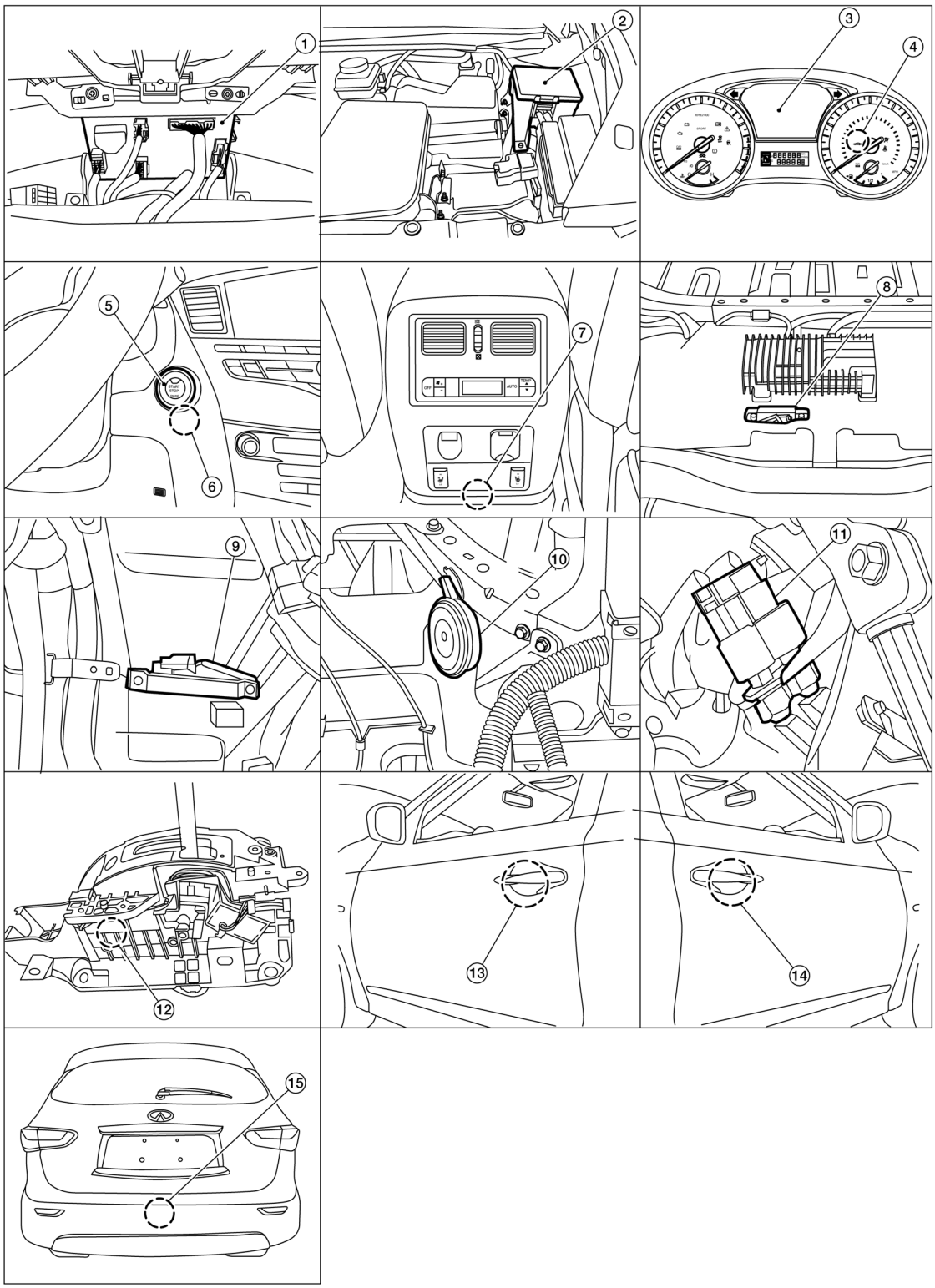

ALKIA2391ZZ

1. BCM (view with combination meter removed)
2. IPDM E/R
3. Combination meter
4. Security indicator lamp
5. Push-button ignition switch
6. NATS antenna amp.
7. Inside key antenna (console)
8. Inside key antenna (luggage room) (view with rear carpet removed)
9. Inside key antenna (instrument center) (view with AV control unit removed)
10. Anti theft horn (view with right headlamp removed)
11. Stop lamp switch
12. CVT shift selector (park position switch)
13. Outside key antenna (drivers side)
14. Outside key antenna (passenger side)
15. Outside key antenna (rear bumper)

Component Description

INFOID:0000000011135240

Component	Reference
CVT shift selector (park position switch)	SEC-6
BCM	SEC-6
ECM	SEC-7
IPDM E/R	SEC-7
NATS antenna amp.	SEC-7
Combination meter	SEC-7
Door switch	SEC-7
Hood switch	SEC-7
Outside key antenna	SEC-7
Inside key antenna	SEC-7
Intelligent Key	SEC-7
Push-button ignition switch	SEC-7
Remote keyless entry receiver	SEC-7
Security indicator lamp	SEC-8
Starter control relay	SEC-8
Starter relay	SEC-8
Stop lamp switch	SEC-8
Transmission range switch	SEC-8
Vehicle information display	SEC-8

CVT Shift Selector (Park Position Switch)

INFOID:0000000011135241

Park position switch detects that CVT shift selector is in the P (Park) position and then transmits the signal to BCM and IPDM E/R.
BCM confirms the CVT shift selector position with the following 5 signals:
- P (Park) position signal from CVT shift selector (park position switch)
- P/N position signal from TCM
- P (Park) position signal from IPDM E/R (CAN)
- P/N position signal from IPDM E/R (CAN)
- P/N position signal from TCM (CAN)

IPDM E/R confirms the CVT shift selector position with the following 3 signals:
- P (Park) position signal from CVT shift selector (park position switch)
- P/N position signal from TCM
- P/N position signal from BCM (CAN)

BCM

INFOID:0000000011135242

BCM controls INTELLIGENT KEY SYSTEM (ENGINE START FUNCTION), INFINITI VEHICLE IMMOBILIZER SYSTEM-NATS [IVIS (NATS)], and VEHICLE SECURITY SYSTEM.

BCM performs the ID verification between BCM and Intelligent Key when the Intelligent Key is carried into the detection area of inside key antenna and push-button ignition switch is pressed. If the ID verification result is OK, push-button ignition switch operation is available.
Then, when the power supply position is turned ON, BCM performs ID verification between BCM and ECM. If the ID verification result is OK, ECM can start engine.

ECM

INFOID:0000000011135243

ECM controls the engine.
When power supply position is turned ON, BCM starts communication with ECM and performs the ID verification between BCM and ECM.
If the verification result is OK, the engine can start. If the verification result is NG, the engine can not start.

IPDM E/R

INFOID:0000000011135244

IPDM E/R has the starter relay and starter control relay inside. Starter relay and starter control relay are used for the engine starting function. IPDM E/R controls these relays while communicating with BCM.

NATS Antenna Amp.

INFOID:0000000011135245

The ID verification is performed between BCM and transponder in Intelligent Key via NATS antenna amp. when Intelligent Key backside is contacted to push-button ignition switch in case that Intelligent Key battery is discharged. If the ID verification result is OK, the operation of starting engine is available.

Combination Meter

INFOID:0000000011135246

Combination meter transmits the vehicle speed signal to BCM via CAN communication.
BCM also receives the vehicle speed signal from ABS actuator and electric unit (control unit) via CAN communication. BCM compares both signals to detect the vehicle speed.

Door Switch

INFOID:0000000011135247

Door switch detects door open/close condition and then transmits ON/OFF signal to BCM.

Outside Key Antenna

INFOID:0000000011135248

Inside key antenna detects whether Intelligent Key is inside the vehicle and transmits the signal to BCM.
Three inside key antennas are installed in the instrument center, console and luggage room.

Hood Switch

INFOID:0000000011135249

Hood switch detects that hood is open/closed, and then transmits the signal to IPDM E/R. IPDM E/R transmits hood switch signal to BCM via CAN communication.

Inside Key Antenna

INFOID:0000000011135250

Inside key antenna detects whether Intelligent Key is inside the vehicle and transmits the signal to BCM.
Three inside key antennas are installed in the instrument center, console and luggage room.

Remote Keyless Entry Receiver

INFOID:0000000011135251

Remote keyless entry receiver receives each button operation signal and electronic key ID signal from Intelligent Key and then transmits the signal to BCM.

Intelligent Key

INFOID:0000000011135252

Each Intelligent Key has an individual electronic ID and transmits the ID signal by request from BCM.
Carrying the Intelligent Key whose ID is registered in BCM, the driver can perform, remote start, door lock/unlock operation, remote liftgate, panic alarm and push-button ignition switch operation.

Push-button Ignition Switch

INFOID:0000000011135253

Push-button ignition switch detects that push-button is pressed and then transmits the signal to BCM. BCM changes the power supply position with the operation of push-button ignition switch. BCM maintains the power supply position status while push-button is not operated.

Security Indicator Lamp

INFOID:0000000011135254

Security indicator lamp is located on combination meter.
Security indicator lamp blinks when power supply position is any position other than ON to warn that INFINITI VEHICLE IMMOBILIZER SYSTEM-NATS [IVIS (NATS)] is on board.

Starter Control Relay

INFOID:0000000011135255

Engine starting system functions by controlling both starter relay and starter control relay.
Both relays are integrated in IPDM E/R. Starter relay is controlled by BCM and starter control relay is controlled by IPDM E/R on request from BCM.
IPDM E/R transmits starter relay and starter control relay status signal to BCM via CAN communication.

Starter Relay

INFOID:0000000011135256

Engine starting system functions by controlling both starter relay and starter control relay.
Both relays are integrated in IPDM E/R. Starter relay is controlled by BCM, and starter control relay is controlled by IPDM E/R on request from BCM.
IPDM E/R transmits starter relay and starter control relay status signal to BCM via CAN communication.

Stop Lamp Switch

INFOID:0000000011135257

Stop lamp switch detects that brake pedal is depressed, and then transmits the signal to BCM.

Transmission Range Switch

INFOID:0000000011135258

Transmission range switch is integrated in CVT assembly, and detects the CVT shift selector position.
TCM receives the transmission range switch signal and then transmits the P/N position signal to BCM and IPDM E/R.
BCM confirms the CVT shift selector position with the following 5 signals:
- P (Park) position signal from CVT shift selector (park position switch)
- P/N position signal from TCM
- P (Park) position signal from IPDM E/R (CAN)
- P/N position signal from IPDM E/R (CAN)
- P/N position signal from TCM (CAN)

IPDM E/R confirms the CVT shift selector position with the following 3 signals:
- P (Park) position signal from CVT shift selector (park position switch)
- P/N position signal from TCM
- P/N position signal from BCM (CAN)

Vehicle Information Display

INFOID:0000000011135259

Vehicle information display is integrated in combination meter.
Various information and warnings regarding the Intelligent Key System are displayed.

SYSTEM

INTELLIGENT KEY SYSTEM/ENGINE START FUNCTION

INTELLIGENT KEY SYSTEM/ENGINE START FUNCTION : System Diagram

INFOID:0000000011135260

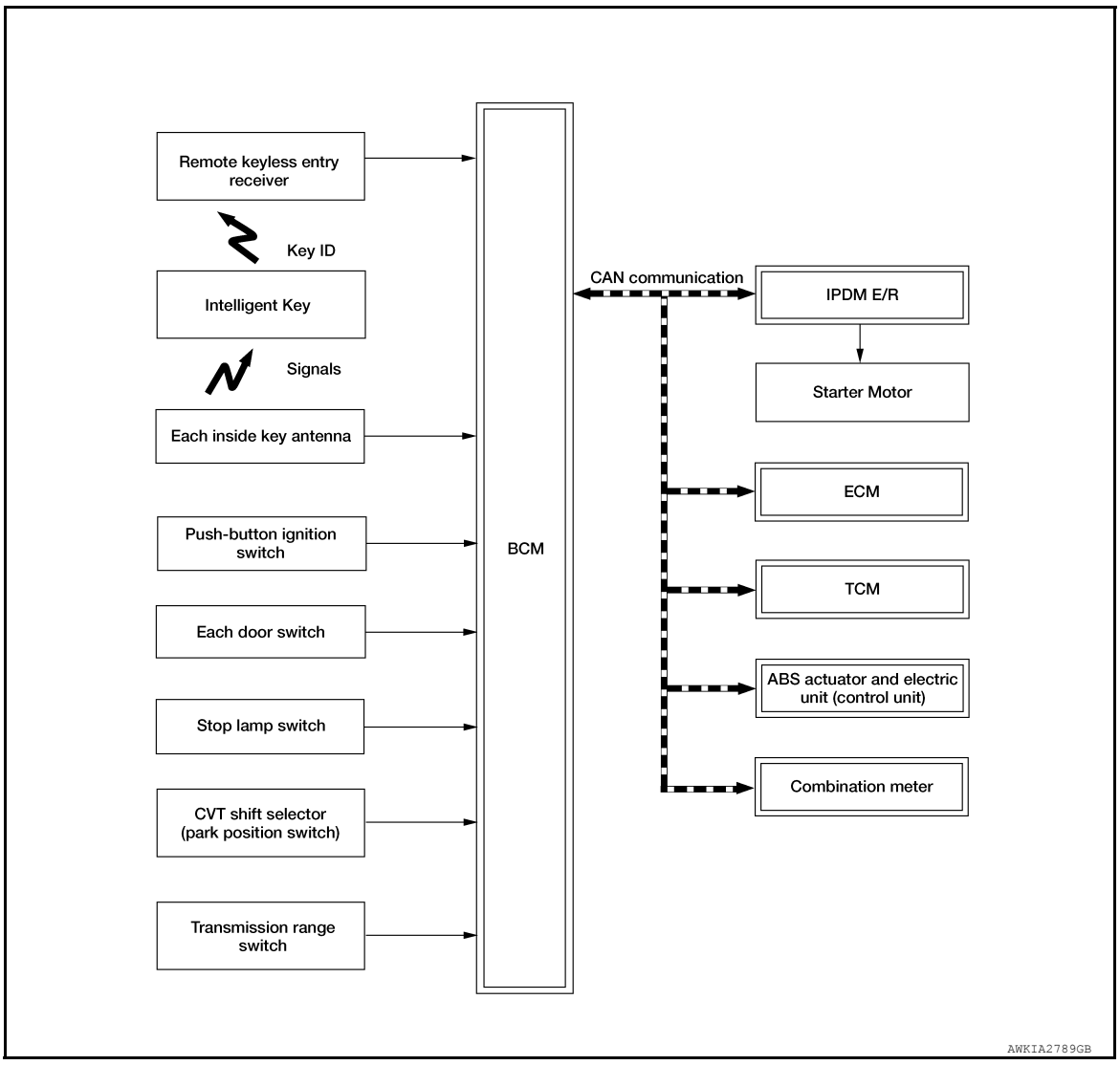

INTELLIGENT KEY SYSTEM/ENGINE START FUNCTION : System Description

INFOID:0000000011135261

SYSTEM DESCRIPTION

- The engine start function of Intelligent Key system makes it possible to start and stop the engine without using the key, based on the electronic ID verification. The electronic ID verification is performed between BCM and Intelligent Key when the push-button ignition switch is pressed while the Intelligent Key is within the detection area of inside key antenna.
  NOTE:
  The driver should carry the Intelligent Key at all times.
- Intelligent Key has 2 IDs [Intelligent Key ID and IVIS (NATS) ID]. It can perform the door lock/unlock operation and the push-button ignition switch operation when the registered Intelligent Key is carried.
- When Intelligent Key battery is discharged, engine can be started by operating push-button ignition switch after contacting Intelligent Key backside to push-button ignition switch. At that time, the IVIS (NATS) ID verification is performed.
- If the ID is successfully verified, when push-button ignition switch is pressed, the engine can be started.
- Up to 4 Intelligent Keys can be registered (Including the standard Intelligent Key) upon request from the customer.

- For initialization and registration of Intelligent Key, refer to CONSULT Immobilizer mode and follow the on-screen instructions.

NOTE:

Refer to DLK-22, "INTELLIGENT KEY SYSTEM : System Description" for any functions other than engine start function of Intelligent Key system.

PRECAUTIONS FOR INTELLIGENT KEY SYSTEM

The transponder [the chip for IVIS (NATS) ID verification] is integrated into the Intelligent Key. In that case, the IVIS (NATS) ID verification can be performed when Intelligent Key backside is contacted to push-button ignition switch. If verification result is OK, engine can be started.

OPERATION WHEN INTELLIGENT KEY IS CARRIED

1. When the push-button ignition switch is pressed, the BCM activates the inside key antenna and transmits the request signal to the Intelligent Key.
2. The Intelligent Key receives the request signal and transmits the Intelligent Key ID signal to the BCM.
3. BCM receives the Intelligent Key ID signal via remote keyless entry receiver and verifies it with the registered ID.
4. BCM turns ACC relay ON and transmits the ignition power supply ON signal to IPDM E/R.
5. IPDM E/R turns the ignition relay ON and starts the ignition power supply.
6. BCM detects that the selector lever position and brake pedal operating condition.
7. BCM transmits the starter request signal to IPDM E/R and turns the starter relay in IPDM E/R ON if BCM judges that the engine start condition* is satisfied.
8. IPDM E/R turns the starter control relay ON when receiving the starter request signal.
9. Power supply is supplied through the starter relay and the starter control relay to operate the starter motor.

   CAUTION:

   If a malfunction is detected in the Intelligent Key system, the “KEY” warning lamp in the combination meter illuminates. At that time, the engine cannot be started.
10. When BCM receives feedback signal from ECM indicating that the engine is started, the BCM transmits a stop signal to IPDM E/R and stops cranking by turning OFF the starter motor relay. (If engine start is unsuccessful, cranking stops automatically within 5 seconds.)

    CAUTION:

    When the Intelligent Key is carried outside of the vehicle (inside key antenna detection area) while the power supply is in the ACC or ON position, even if the engine start condition* is satisfied, the engine cannot be started.

*: For the engine start condition, refer to the table below “POWER SUPPLY POSITION CHANGE TABLE BY PUSH-BUTTON IGNITION SWITCH OPERATION”.

OPERATION RANGE

Engine can be started when Intelligent Key is inside the vehicle. However, sometimes engine may not start when Intelligent Key is on instrument panel or in glove box.

ENGINE START OPERATION WHEN INTELLIGENT KEY IS CONTACTED TO PUSH-BUTTON IGNITION SWITCH

When Intelligent Key battery is discharged, the IVIS (NATS) ID verification between transponder in Intelligent Key and BCM is performed when Intelligent Key backside is contacted to push-button ignition switch. If the verification result is OK, engine can be started.

POWER SUPPLY POSITION CHANGE TABLE BY PUSH-BUTTON IGNITION SWITCH OPERATION

The power supply position changing operation can be performed with the following operations.

NOTE:

- When an Intelligent Key is within the detection area of inside key antenna and when Intelligent Key backside is contacted to push-button ignition switch, it is equivalent to the operations below.
- When starting the engine, the BCM monitors under the engine start conditions:

- Brake pedal operating condition
- Selector lever position
- Vehicle speed

Vehicle speed: less than 4 km/h (2.5 MPH)

Power supply position	Engine start/stop condition		Push-button ignition switch operation frequency
	Selector lever	Brake pedal operation condition	
LOCK → ACC	—	Not depressed	1
LOCK → ACC → ON	—	Not depressed	2
LOCK → ACC → ON → OFF	—	Not depressed	3
LOCK → START ACC → START ON → START	P or N position	Depressed	1
Engine is running → OFF	—	—	1

Vehicle speed: 4 km/h (2.5 MPH) or more

Power supply position	Engine start/stop condition		Push-button ignition switch operation frequency
	Selector lever	Brake pedal operation condition	
Engine is running → ACC	—	—	Emergency stop operation
Engine stall return operation while driving	N position	Not depressed	1

Emergency stop operation

- Press and hold the push-button ignition switch for 2 seconds or more.
- Press the push-button ignition switch 3 times or more within 1.5 seconds.

INFINITI VEHICLE IMMOBILIZER SYSTEM-NATS

INFINITI VEHICLE IMMOBILIZER SYSTEM-NATS : System Diagram

INFOID:0000000011135262

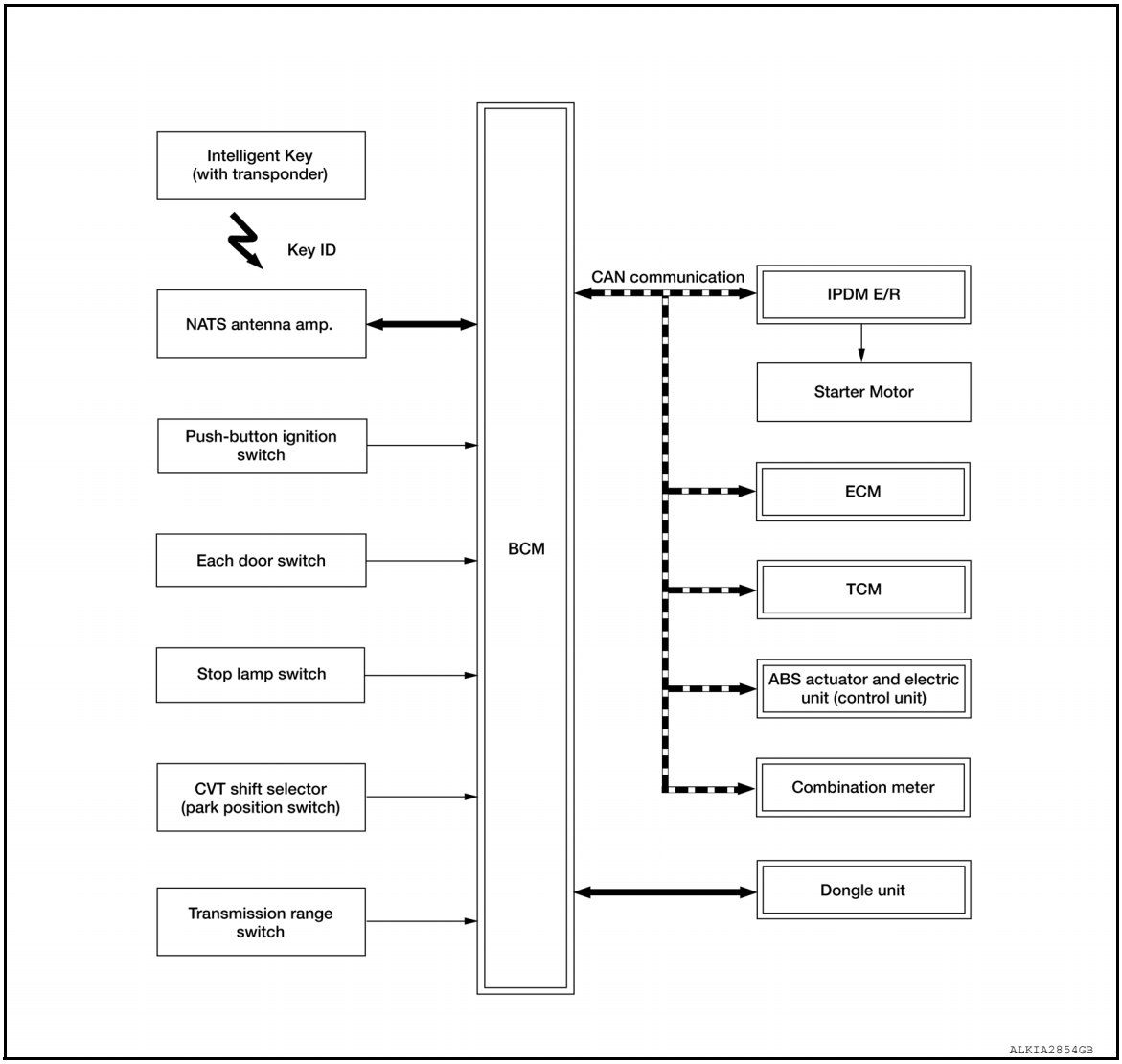

INFINITI VEHICLE IMMOBILIZER SYSTEM-NATS : System Description

INFOID:0000000011135263

SYSTEM DESCRIPTION

- The INFINITI VEHICLE IMMOBILIZER SYSTEM-NATS [IVIS (NATS)] prevents the engine from being started by Intelligent Key whose ID is not registered to the vehicle (BCM). It has higher protection against auto theft involving the duplication of mechanical keys.
- The ignition key integrated in the Intelligent Key cannot start the engine. When the Intelligent Key battery is discharged, the IVIS (NATS) ID verification is performed between the transponder integrated with Intelligent Key and BCM via NATS antenna amp. when the Intelligent Key backside is contacted to push-button ignition switch. If the verification results are OK, the engine start operation can be performed by the push-button ignition switch operation.
- Locate the security indicator lamp and apply the anti-theft system equipment sticker that warns that the IVIS (NATS) is on-board the model.
- Security indicator lamp always blinks when the power supply position is any position other than ON.
- Up to 4 Intelligent Keys can be registered (including the standard ignition key) upon request from the owner.
- Specified registration is required when replacing ECM, BCM or Intelligent Key.
- For initialization and registration of Intelligent Key, refer to CONSULT Immobilizer mode and follow the on-screen instructions.
- Possible symptom of IVIS (NATS) malfunction is “Engine cannot start”. The engine can not be started because of other than IVIS (NATS) malfunction, so start the trouble diagnosis according to SEC-75, "Work Flow".

- If ECM other than genuine part is installed, the engine cannot be started. For ECM replacement procedure, refer to EC-952, "Removal and Installation" (except for Mexico) or EC-952, "Removal and Installation" (for Mexico).

PRECAUTIONS FOR KEY REGISTRATION

- The ID registration is a procedure that erases the current IVIS (NATS) ID once, and then reregisters a new ID. Therefore before starting the registration operation, collect all registered Intelligent Keys from the customer.
- When registering the Intelligent Key, perform only one procedure to simultaneously register both ID [IVIS (NATS) ID and Intelligent Key ID].

SECURITY INDICATOR LAMP

- Warns that the vehicle is equipped with IVIS (NATS).
- Security indicator lamp always blinks when the power supply position is any position other than ON.

NOTE:
Because security indicator lamp is highly efficient, the battery is barely affected.

ENGINE START OPERATION WHEN INTELLIGENT KEY IS CONTACTED TO PUSH-BUTTON IGNITION SWITCH

1. When brake pedal is depressed while selector lever is in the P (Park) position, BCM activates NATS antenna amp. that is located behind push-button ignition switch.
2. When Intelligent Key (transponder built-in) backside is contacted to push-button ignition switch, BCM starts IVIS (NATS) ID verification between BCM and Intelligent Key (transponder built-in) via NATS antenna amp.
3. When the IVIS (NATS) ID verification result is OK, buzzer in combination meter sounds and BCM transmits the result to ECM.
4. BCM turns ACC relay ON and transmits ignition power supply ON signal to IPDM E/R.
5. IPDM E/R turns the ignition relay ON and starts the ignition power supply.
6. BCM detects that the selector lever position is P (Park) or N (Neutral).
7. BCM transmits starter request signal to IPDM E/R and turns the starter relay in IPDM E/R ON if BCM judges that the engine start condition* is satisfied.
8. IPDM E/R turns the starter control relay ON when receiving the starter request signal.
9. Power supply is supplied through the starter relay and the starter control relay to operate the starter motor.
10. When BCM receives feedback signal from ECM indicating that the engine is started, BCM transmits a stop signal to IPDM E/R and stops cranking by turning off the starter motor relay. (If engine start is unsuccessful, cranking stops automatically within 5 seconds.)

*: For the engine start condition, refer to the table “POWER SUPPLY POSITION CHANGE TABLE BY PUSH-BUTTON IGNITION SWITCH OPERATION” below.

POWER SUPPLY POSITION CHANGE TABLE BY PUSH-BUTTON IGNITION SWITCH OPERATION

The power supply position changing operation can be performed with the following operations.

NOTE:

- When an Intelligent Key is within the detection area of inside key antenna and when Intelligent Key backside is contacted to push-button ignition switch, it is equivalent to the operations below.
- When starting the engine, the BCM monitors under the engine start conditions:

- Brake pedal operating condition
- Selector lever position
- Vehicle speed

Vehicle speed: less than 4 km/h (2.5 MPH)

Power supply position	Engine start/stop condition		Push-button ignition switch operation frequency
	Selector lever	Brake pedal operation condition	
LOCK → ACC	—	Not depressed	1
LOCK → ACC → ON	—	Not depressed	2
LOCK → ACC → ON → OFF	—	Not depressed	3

Power supply position	Engine start/stop condition		Push-button ignition switch operation frequency
	Selector lever	Brake pedal operation condition	
LOCK → START ACC → START ON → START	P (Park) or N (Neutral) position	Depressed	1
Engine is running → OFF	—	—	1

Vehicle speed: 4 km/h (2.5 MPH) or more

Power supply position	Engine start/stop condition		Push-button ignition switch operation frequency
	Selector lever	Brake pedal operation condition	
Engine is running → ACC	—	—	Emergency stop operation
Engine stall return operation while driving	N (Neutral) position	Not depressed	1

Emergency stop operation

- Press and hold the push-button ignition switch for 2 seconds or more.
- Press the push-button ignition switch 3 times or more within 1.5 seconds.

VEHICLE SECURITY SYSTEM

VEHICLE SECURITY SYSTEM : System Diagram

INFOID:0000000011135264

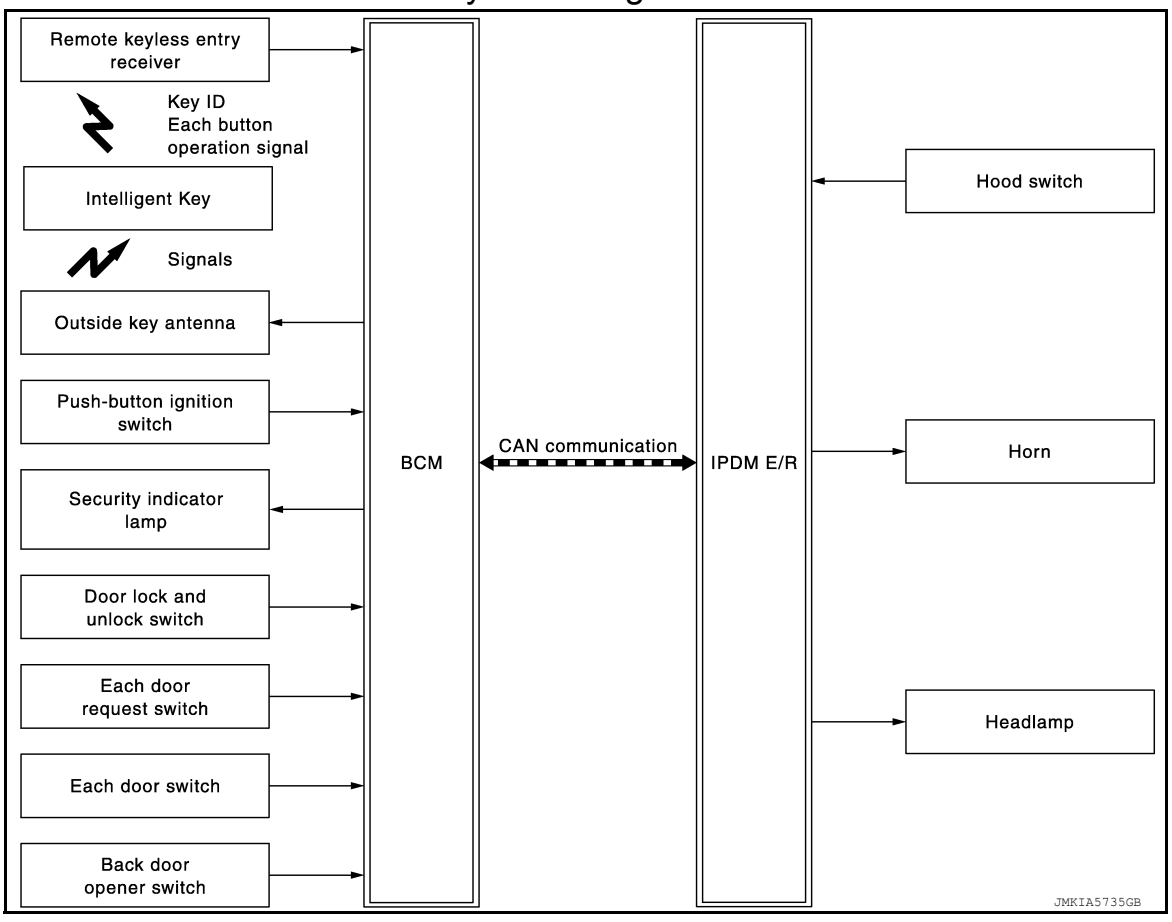

VEHICLE SECURITY SYSTEM : System Description

INFOID:0000000011135265

- The vehicle security system has two alarm functions (theft warning alarm and panic alarm) and reduces the possibility of a theft or mischief by activating horns and headlamps intermittently.

- The panic alarm does not start when the theft warning alarm is activating and the panic alarm stops when the theft warning alarm is activated.
  The priority of the functions are as per the following.

Priority	Function
1	Theft warning alarm
2	Panic alarm

THEFT WARNING ALARM

- The theft warning alarm function activates horns and headlamps intermittently when BCM detects that any door or hood is opened by unauthorized means while the system is in the ARMED state.
- Security indicator lamp on combination meter always blinks when power supply position is any position other than ON. Security indicator lamp blinking warns that the vehicle is equipped with a vehicle security system.

Operation Flow

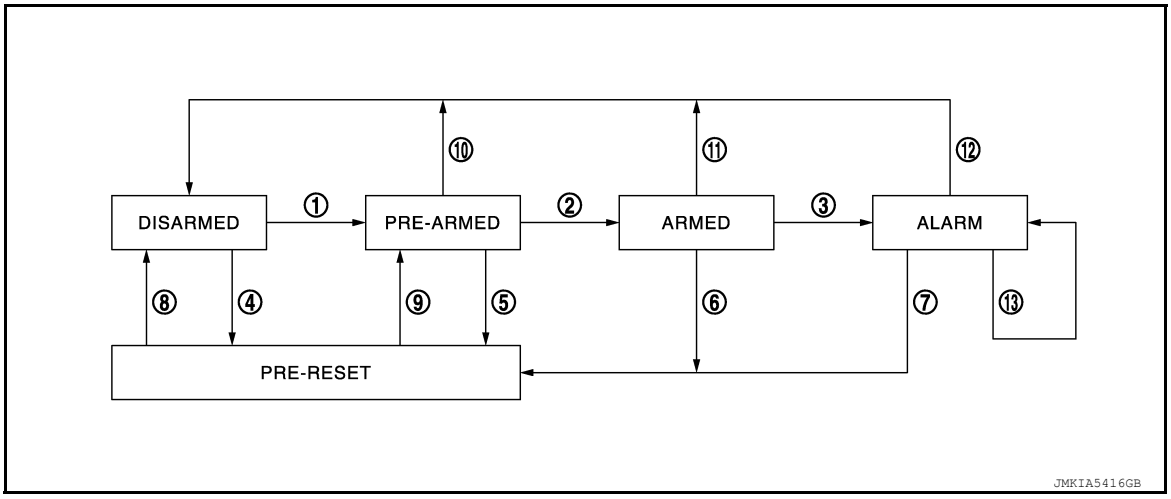

No.	System state	Switching condition		
1	DISARMED to PRE-ARMED	When all conditions of A and one condition of B is satisfied.	A	B
			• Power supply position: OFF/LOCK • All doors: Closed • Hood: Closed	All doors are locked by: • Door key cylinder LOCK switch • LOCK button of Intelligent Key • Door request switch
2	PRE-ARMED to ARMED	When all of the following conditions are satisfied for 30 seconds.	• Power supply position: OFF/LOCK • All doors: Locked • Hood: Closed	
3	ARMED to ALARM	When one condition of A and one condition of B are satisfied.	A	B
			Intelligent Key: Not used	• Any door: Open • Hood: Open
4	DISARMED to PRE-RESET	When all conditions of A and one condition of B is satisfied.	A	B
			• Power supply position: OFF/LOCK • All doors: Closed • Hood: Open	All doors are locked by: • Door key cylinder LOCK switch • LOCK button of Intelligent Key • Door request switch
5	PRE-ARMED to PRE-RESET	When one of the following conditions is satisfied.	• Hood: Open	
6	ARMED to PRE-RESET	No conditions.		
7	ALARM to PRE-RESET			

No.	System state	Switching condition	
8	PRE-RESET to DISARMED	When one of the following conditions is satisfied.	• Power supply position: ACC/ON/CRANKING/RUN • Door key cylinder UNLOCK switch: ON • UNLOCK button of Intelligent Key: ON • Door request switch: ON • Back door opener switch: ON • UNLOCK switch of door lock and unlock switch: ON • Any door: Open
9	PRE-RESET to PRE-ARMED	When all of the following conditions are satisfied.	• Power supply position: OFF/LOCK • All doors: Closed • Hood: Closed
10	PRE-ARMED to DISARMED	When one of the following conditions is satisfied.	• Power supply position: ACC/ON/CRANKING/RUN • Door key cylinder UNLOCK switch: ON • UNLOCK button of Intelligent Key: ON • AUTO BACK DOOR button of Intelligent Key: ON • Door request switch: ON • Back door opener switch: ON • Any door: Open
11	ARMED to DISARMED	When one of the following conditions is satisfied.	• Power supply position: ACC/ON/CRANKING/RUN • Door key cylinder UNLOCK switch: ON • UNLOCK button of Intelligent Key: ON • AUTO BACK DOOR button of Intelligent Key: ON • Door request switch: ON • Back door opener switch: ON
12	ALARM to DISARMED		
13	RE-ALARM	When one of the following conditions is satisfied after the ALARM operation is finished.	• Any door: Open • Hood: Open

NOTE:

- BCM ignores the door key cylinder UNLOCK switch signal input for 1 second after the door key cylinder LOCK switch signal input.
- To lock/unlock all doors by operating remote controller button of Intelligent Key or door request switch, Intelligent Key must be within the detection area of outside key antenna. For details, refer to DLK-22, "INTELLIGENT KEY SYSTEM : System Description".
- To open back door by operating back door opener switch, Intelligent Key must be within the detection area of outside key antenna. For details, refer to DLK-22, "INTELLIGENT KEY SYSTEM : System Description".

DISARMED Phase

The vehicle security system is not set in the DISARMED phase. The vehicle security system stays in this phase while any door is open because it is assumed that the owner is inside or nearby the vehicle. Security indicator lamp blinks every 2.4 seconds.

When the vehicle security system is reset, each phase switches to the DISARMED phase directly.

PRE-ARMED Phase

The PRE-ARMED phase is the transient state between the DISARMED phase and the ARMED phase. This phase is maintained for 30 seconds so that the owner can reset the setting due to a mis-operation. This phase switches to the ARMED phase when vehicle conditions are not changed for 30 seconds. Security indicator lamp illuminates while being in this phase.

To reset the PRE-ARMED phase, refer to the switching condition of No. 10 in the table above.

ARMED Phase

The vehicle security system is set and BCM monitors all necessary inputs. If any door or hood is opened without using Intelligent Key, vehicle security system switches to the ALARM phase. Security indicator lamp blinks every 2.4 seconds.

To reset the ARMED phase, refer to the switching condition of No. 11 in the table above.

ALARM Phase

BCM transmits “Theft Warning Horn Request” signal and “High Beam Request” signal intermittently to IPDM E/R via CAN communication. In this phase, horns and headlamps are activated intermittently for approximately 50 seconds to warn that the vehicle is accessed by unauthorized means. ON/OFF timing of horns and headlamps are synchronized. After 50 seconds, the vehicle security system returns to the ARMED phase. At this time, if BCM still detects unauthorized access to the vehicle, the system is switched to the ALARM phase again. This RE-ALARM operation is carried out a maximum of 2 times.

To cancel the ALARM operation, refer to the switching condition of No. 12 in the table above.

NOTE:
If a battery terminal is disconnected during the ALARM phase, theft warning alarm stops. But when the battery terminal is reconnected, theft warning alarm is activated again.

PRE-RESET Phase
The PRE-RESET phase is the transient state between each phase and DISARMED phase. If only the condition of hood is not satisfied, the system switches to the PRE-RESET phase. Then, when any condition is changed, the system switches to the DISARMED phase or PRE-ARMED phase.

PANIC ALARM

- The panic alarm function activates horns and headlamps intermittently when the owner presses the PANIC ALARM button of Intelligent Key outside the vehicle while the power supply position is OFF or LOCK.
- When BCM receives panic alarm signal from Intelligent Key, BCM transmits “Theft Warning Horn Request” signal and “High Beam Request” signal intermittently to IPDM E/R via CAN communication. To prevent the activation due to mis-operation of Intelligent Key by owner, the panic alarm function is activated when BCM receives the signal for 0.4 - 0.6 seconds.
- Panic alarm operation is maintained for 25 seconds.
- Panic alarm operation is cancelled when BCM receives one of the following signals:

- LOCK button of Intelligent Key: ON
- UNLOCK button of Intelligent Key: ON
- PANIC ALARM button of Intelligent Key: Long pressed
- Any door request switch: ON

DIAGNOSIS SYSTEM (BCM)
COMMON ITEM
COMMON ITEM : CONSULT Function (BCM - COMMON ITEM)

INFOID:0000000011551635

CAUTION:
After disconnecting the CONSULT vehicle interface (VI) from the data link connector, the ignition must be cycled OFF → ON (for at least 5 seconds) → OFF. If this step is not performed, the BCM may not go to "sleep mode", potentially causing a discharged battery and a no-start condition.

APPLICATION ITEM
CONSULT performs the following functions via CAN communication with BCM.

Direct Diagnostic Mode	Description
Ecu Identification	The BCM part number is displayed.
Self Diagnostic Result	The BCM self diagnostic results are displayed.
Data Monitor	The BCM input/output data is displayed in real time.
Active Test	The BCM activates outputs to test components.
Work support	The settings for BCM functions can be changed.
Configuration	• The vehicle specification can be read and saved. • The vehicle specification can be written when replacing BCM.
CAN Diag Support Mntr	The result of transmit/receive diagnosis of CAN communication is displayed.

SYSTEM APPLICATION
BCM can perform the following functions.

System	Sub System	Direct Diagnostic Mode						
		Ecu Identification	Self Diagnostic Result	Data Monitor	Active Test	Work support	Configuration	CAN Diag Support Mntr
Door lock	DOOR LOCK		×	×	×	×		
Rear window defogger	REAR DEFOGGER			×	×	×		
Warning chime	BUZZER			×	×			
Interior room lamp timer	INT LAMP			×	×	×		
Exterior lamp	HEADLAMP			×	×	×		
Wiper and washer	WIPER			×	×	×		
Turn signal and hazard warning lamps	FLASHER			×	×			
Air conditioner	AIR CONDITIONER			×				
Intelligent Key system	INTELLIGENT KEY		×	×	×	×		
Combination switch	COMB SW			×				
BCM	BCM	×	×			×	×	×
Immobilizer	IMMU		×	×	×			
Interior room lamp battery saver	BATTERY SAVER			×	×			
Back door open	TRUNK			×				
Vehicle security system	THEFT ALM			×	×	×		
RAP system	RETAINED PWR			×				

System	Sub System	Direct Diagnostic Mode						
		Ecu Identification	Self Diagnostic Result	Data Monitor	Active Test	Work support	Configuration	CAN Diag Support Mntr
Signal buffer system	SIGNAL BUFFER			×				
TPMS	AIR PRESSURE MONITOR		×	×	×	×		

INTELLIGENT KEY

INTELLIGENT KEY : CONSULT Function (BCM - INTELLIGENT KEY)

INFOID:0000000011551636

CAUTION:

After disconnecting the CONSULT vehicle interface (VI) from the data link connector, the ignition must be cycled OFF → ON (for at least 5 seconds) → OFF. If this step is not performed, the BCM may not go to "sleep mode", potentially causing a discharged battery and a no-start condition.

SELF DIAGNOSTIC RESULT

Refer to BCS-51, "DTC Index".

DATA MONITOR

Monitor Item [Unit]	Main	Description
REQ SW -DR [On/Off]	×	Indicates condition of door request switch LH.
REQ SW -AS [On/Off]	×	Indicates condition of door request switch RH.
REQ SW -BD/TR [On/Off]	×	Indicates condition of back door request switch.
PUSH SW [On/Off]		Indicates condition of push-button ignition switch.
SHFTLCK SLNID PWR SPLY [On/Off]	×	Indicates condition of power supply to shiftlock solenoid.
BRAKE SW 1 [On/Off]	×	Indicates condition of brake switch.
BRAKE SW 2 [On/Off]		Indicates condition of brake switch.
DETE/CANCL SW [On/Off]	×	Indicates condition of P (park) position.
SFT PN/N SW [On/Off]	×	Indicates condition of P (park) or N (neutral) position.
UNLK SEN -DR [On/Off]	×	Indicates condition of door unlock sensor.
PUSH SW -IPDM [On/Off]		Indicates condition of push-button ignition switch received from IPDM E/R on CAN communication line.
IGN RLY1 -F/B [On/Off]		Indicates condition of ignition relay 1 received from IPDM E/R on CAN communication line.
DETE SW -IPDM [On/Off]		Indicates condition of detent switch received from TCM on CAN communication line.
SFT PN -IPDM [On/Off]		Indicates condition of P (park) or N (neutral) position from TCM on CAN communication line.
SFT P -MET [On/Off]		Indicates condition of P (park) position from TCM on CAN communication line.
SFT N -MET [On/Off]		Indicates condition of N (neutral) position from IPDM E/R on CAN communication line.
ENGINE STATE [Stop/Start/Crank/Run]	×	Indicates condition of engine state from ECM on CAN communication line.
VEH SPEED 1 [mph/km/h]	×	Indicates condition of vehicle speed signal received from ABS on CAN communication line.
VEH SPEED 2 [mph/km/h]	×	Indicates condition of vehicle speed signal received from combination meter on CAN communication line.

Monitor Item [Unit]	Main	Description
DOOR STAT -DR [LOCK/READY/UNLK]	×	Indicates condition of driver side door status.
DOOR STAT -AS [LOCK/READY/UNLK]	×	Indicates condition of passenger side door status.
DOOR STAT -RR [LOCK/READY/UNLK]	×	Indicates condition of rear right side door status.
DOOR STAT -RL [LOCK/READY/UNLK]	×	Indicates condition of rear left side door status.
BK DOOR STATE [LOCK/READY/UNLK]	×	Indicates condition of back door status.
ID OK FLAG [Set/Reset]		Indicates condition of Intelligent Key ID.
PRMT ENG STRT [Set/Reset]		Indicates condition of engine start possibility.
PRMT RKE STRT [Set/Reset]		Indicates condition of engine start possibility from Intelligent Key.
I-KEY OK FLAG [Key ON/Key OFF]	×	Indicates condition of Intelligent Key OK flag.
PRBT ENG STRT [Set/Reset]		Indicates condition of engine start prohibit.
ID AUTHENT CANCEL TIMER [under a stop]		Indicates condition of Intelligent Key ID authentication.
ACC BATTERY SAVER [under a stop]		Indicates condition of battery saver.
CRNK PRBT TMR [On/Off]		Indicates condition of crank prohibit timer.
AUT CRANK TMR [On/Off]		Indicates condition of automatic engine crank timer from Intelligent Key.
CRNK PRBT TME [sec]		Indicates condition of engine crank prohibit time.
AUT CRANK TMR [sec]		Indicates condition of automatic engine crank time from Intelligent Key.
CRANKING TME [sec]		Indicates condition of engine cranking time from Intelligent Key.
DETE SW PWR [On/Off]		Indicates condition of detent switch voltage.
ACC RLY -REQ [On/Off]		Indicates condition of accessory relay control request.
RKE OPE COUN1 [0-19]	×	When remote keyless entry receiver receives the signal transmitted while operating on Intelligent Key, the numerical value start changing.
RKE OPE COUN2 [0-19]	×	When remote keyless entry receiver receives the signal transmitted while operating on Intelligent Key, the numerical value start changing.
TRNK/HAT MNTR [On/Off]		Indicates condition of trunk room lamp switch.
RKE-LOCK [On/Off]		Indicates condition of lock signal from Intelligent Key.
RKE-UNLOCK [On/Off]		Indicates condition of unlock signal from Intelligent Key.
RKE-TR/BD [On/Off]		Indicates condition of back door open signal from Intelligent Key.
RKE-PANIC [On/Off]		Indicates condition of panic signal from Intelligent Key.
RKE-MODE CHG [On/Off]		Indicates condition of mode change signal from Intelligent Key.

ACTIVE TEST

Test Item	Description
INTELLIGENT KEY LINK (CAN)	This test is able to check Intelligent Key identification number [Off/ID No1/ID N02/ID No3/ID No4/ID No5].
INT LAMP	This test is able to check interior room lamp operation [On/Off].
FLASHER	This test is able to check hazard lamp operation [LH/RH/Off].
HORN	This test is able to check horn operation [On].
BATTERY SAVER	This test is able to check battery saver operation [On/Off].
TRUNK/BACK DOOR	This test is able to check back door actuator operation [Open].
OUTSIDE BUZZER	This test is able to check Intelligent Key warning buzzer operation [On/Off].
INSIDE BUZZER	This test is able to check combination meter warning chime operation [Take Out/Knob/Key/Off].
INDICATOR	This test is able to check combination meter warning lamp operation [KEY ON/KEY IND/Off].
IGN CONT2	This test is able to check ignition relay-2 control operation [On/Off].
ENGINE SW ILLUMI	This test is able to check push-button ignition switch START indicator operation [On/Off].

Test Item	Description
PUSH SWITCH INDICATOR	This test is able to check push-button ignition switch indicator operation [On/Off].
ACC CONT	This test is able to check accessory relay control operation [On/Off].
IGN CONT1	This test is able to check ignition relay-1 control operation [On/Off].
ST CONT LOW	This test is able to check starter control relay operation [On/Off].
IGNITION RELAY	This test is able to check ignition relay operation [On/Off].
REVERSE LAMP TEST	This test is able to check reverse lamp illumination operation [On/Off].
DOOR HANDLE LAMP TEST	This test is able to check door handle lamp illumination operation [On/Off].
TRUNK/LUGGAGE LAMP TEST	This test is able to check cargo lamp illumination operation [On/Off].
KEYFOB P/W TEST	This test is able to check power window operation using the Intelligent Key [P/W up/down OFF/Send P/W down ON/Send P/W up ON].
SHIFTLOCK SORENOID TEST	This test is able to check shift lock solenoid operation [On/Off].

WORK SUPPORT

Support Item	Setting		Description
IGN/ACC BATTERY SAVER	On*		Battery saver function ON.
	Off		Battery saver function OFF.
REMOTE ENGINE STARTER	On*		Remote engine start function ON.
	Off		Remote engine start function OFF.
ANSWER BACK I-KEY LOCK UNLOCK	BUZZER		Buzzer reminder function by door lock/unlock request switch ON.
	HORN		Horn chirp reminder function by door lock request switch ON.
	Off*		No reminder function by door lock/unlock request switch.
	INVALID		This mode is not used.
ANSWERBACK KEYLESS LOCK UNLOCK	On		Buzzer or horn chirp reminder when doors are locked/unlocked with Intelligent Key.
	Off*		No buzzer or horn chirp reminder when doors are locked/unlocked with Intelligent Key.
WELCOME LIGHT OP SET	On*		Door handle lamp function from request switch ON.
	Off		Door handle lamp function from request switch OFF.
ANSWER BACK	On*		Horn chirp reminder when doors are locked with Intelligent Key.
	Off		No horn chirp reminder when doors are locked with Intelligent Key.
RETRACTABLE MIRROR SET	On		Retractable mirror set ON.
	Off*		Retractable mirror set OFF.
LOCK/UNLOCK BY I-KEY	On*		Door lock/unlock function from Intelligent Key ON.
	Off		Door lock/unlock function from Intelligent Key OFF.
ENGINE START BY I-KEY	On*		Engine start function from Intelligent Key ON.
	Off		Engine start function from Intelligent Key OFF.
TRUNK/GLASS HATCH OPEN	On*		Buzzer reminder function by back door request switch ON.
	Off		Buzzer reminder function by back door request switch OFF.
INTELLIGENT KEY LINK SET	On		Intelligent Key link set ON.
	Off*		Intelligent Key link set OFF.
CONFIRM KEY FOB ID	—		Intelligent Key ID code can be checked.
SHORT CRANKING OUTPUT	Start	70 msec	Starter motor operation duration times.
		100 msec	
		200 msec	
	End		—

Support Item	Setting		Description
INSIDE ANT DIAGNOSIS	—		This function allows inside key antenna self-diagnosis.
AUTO LOCK SET	MODE7	5 min	Auto door lock time can be set in this mode.
	MODE6	4 min	
	MODE5	3 min	
	MODE4	2 min	
	MODE3*	1 min	
	MODE2	30 sec	
	MODE1	Off	

*: Initial Setting

THEFT ALM

THEFT ALM : CONSULT Function (BCM - THEFT ALM)

INFOID:0000000011551637

CAUTION:

After disconnecting the CONSULT vehicle interface (VI) from the data link connector, the ignition must be cycled OFF → ON (for at least 5 seconds) → OFF. If this step is not performed, the BCM may not go to "sleep mode", potentially causing a discharged battery and a no-start condition.

DATA MONITOR

Monitored Item	Description
REQ SW -DR [On/Off]	Indicates condition of door request switch LH.
REQ SW -AS [On/Off]	Indicates condition of door request switch RH.
REQ SW -BD/TR [On/Off]	Indicates condition of back door request switch.
PUSH SW [On/Off]	Indicates condition of push-button ignition switch.
UNLK SEN -DR [On/Off]	Indicates condition of door unlock sensor.
DOOR SW-DR [On/Off]	Indicates condition of front door switch LH.
DOOR SW-AS [On/Off]	Indicates condition of front door switch RH.
DOOR SW-RR [On/Off]	Indicates condition of rear door switch RH.
DOOR SW-RL [On/Off]	Indicates condition of rear door switch LH.
DOOR SW-BK [On/Off]	Indicates condition of back door switch.
CDL LOCK SW [On/Off]	Indicates condition of lock signal from door lock and unlock switch.
CDL UNLOCK SW [On/Off]	Indicates condition of unlock signal from door lock and unlock switch.
KEY CYL LK-SW [On/Off]	Indicates condition of lock signal from door key cylinder switch.
KEY CYL UN-SW [On/Off]	Indicates condition of unlock signal from door key cylinder switch.
TRNK/HAT MNTR [On/Off]	Indicates condition of trunk room lamp switch.
TR/BD OPEN SW [On/Off]	Indicates condition of back door opener switch.
RKE-LOCK [On/Off]	Indicates condition of lock signal from Intelligent Key.
RKE-UNLOCK [On/Off]	Indicates condition of unlock signal from Intelligent Key.
RKE-TR/BD [On/Off]	Indicates condition of back door open signal from Intelligent Key.

ACTIVE TEST

Test Item	Description
FLASHER	This test is able to check turn signal lamp operation [LH/RH/Off].
THEFT IND	This test is able to check security indicator lamp operation [On/Off].
VEHICLE SECURITY HORN	This test is able to check vehicle security horn operation [On].
HEAD LAMP(HI)	This test is able to check vehicle security lamp operation [On].

WORK SUPPORT

Support Item	Setting	Description
SECURITY ALARM SET	On	Security alarm ON.
	Off	Security alarm OFF.

IMMU

IMMU : CONSULT Function (BCM - IMMU)

INFOID:0000000011551638

CAUTION:

After disconnecting the CONSULT vehicle interface (VI) from the data link connector, the ignition must be cycled OFF → ON (for at least 5 seconds) → OFF. If this step is not performed, the BCM may not go to "sleep mode", potentially causing a discharged battery and a no-start condition.

SELF DIAGNOSTIC RESULT

Refer to BCS-51, "DTC Index".

DATA MONITOR

Monitor Item [Unit]	Description
CONFRM ID ALL [Yet/DONE]	Switches to DONE when an Intelligent Key is registered.
CONFIRM ID4 [Yet/DONE]	
CONFIRM ID3 [Yet/DONE]	
CONFIRM ID2 [Yet/DONE]	
CONFIRM ID1 [Yet/DONE]	
TP 4 [Yet/DONE]	DONE indicates the number of Intelligent Key ID which has been registered.
TP 3 [Yet/DONE]	
TP 2 [Yet/DONE]	
TP 1 [Yet/DONE]	
PUSH SW [On/Off]	Indicates condition of push-button ignition switch.

ACTIVE TEST

Test Item	Description
THEFT IND	This test is able to check security indicator operation [On/Off].

DIAGNOSIS SYSTEM (IPDM E/R)

CONSULT Function (IPDM E/R)

INFOID:0000000011551642

CAUTION:
After disconnecting the CONSULT vehicle interface (VI) from the data link connector, the ignition must be cycled OFF → ON (for at least 5 seconds) → OFF. If this step is not performed, the BCM may not go to "sleep mode", potentially causing a discharged battery and a no-start condition.

APPLICATION ITEM

CONSULT performs the following functions via CAN communication with IPDM E/R.

Direct Diagnostic Mode	Description
Ecu Identification	The IPDM E/R part number is displayed.
Self Diagnostic Result	The IPDM E/R self diagnostic results are displayed.
Data Monitor	The IPDM E/R input/output data is displayed in real time.
Active Test	The IPDM E/R activates outputs to test components.
CAN Diag Support Mntr	The result of transmit/receive diagnosis of CAN communication is displayed.

ECU IDENTIFICATION

The IPDM E/R part number is displayed.

SELF DIAGNOSTIC RESULT

Refer to PCS-20, "DTC Index".

DATA MONITOR

Monitor Item [Unit]	Main Signals	Description
RAD FAN REQ [%]	×	Indicates cooling fan speed signal received from ECM on CAN communication line
AC COMP REQ [On/Off]	×	Indicates A/C compressor request signal received from ECM on CAN communication line
TAIL&CLR REQ [On/Off]	×	Indicates position light request signal received from BCM on CAN communication line
HL LO REQ [On/Off]	×	Indicates low beam request signal received from BCM on CAN communication line
HL HI REQ [On/Off]	×	Indicates high beam request signal received from BCM on CAN communication line
FR FOG REQ [On/Off]	×	Indicates front fog light request signal received from BCM on CAN communication line
FR WIP REQ [Stop/1LOW/Low/Hi]	×	Indicates front wiper request signal received from BCM on CAN communication line
WIP AUTO STOP [STOP P/ACT P]	×	Indicates condition of front wiper auto stop signal
WIP PROT [Off/BLOCK]	×	Indicates condition of front wiper fail-safe operation
IGN RLY1 -REQ [On/Off]		Indicates ignition switch ON signal received from BCM on CAN communication line
IGN RLY [On/Off]	×	Indicates condition of ignition relay
PUSH SW [On/Off]		Indicates condition of push-button ignition switch
INTER/NP SW [On/Off]		Indicates condition of CVT shift position
ST RLY CONT [On/Off]		Indicates starter relay status signal received from BCM on CAN communication line
IHBT RLY -REQ [On/Off]		Indicates starter control relay signal received from BCM on CAN communication line
ST/INHI RLY [Off/ ST /INHI]		Indicates condition of starter relay and starter control relay

Monitor Item [Unit]	Main Signals	Description
DETENT SW [On/Off]		Indicates condition of CVT shift selector (park position switch)
DTRL REQ [Off]		Indicates daytime light request signal received from BCM on CAN communication line
HOOD SW [On/Off]		Indicates condition of hood switch
THFT HRN REQ [On/Off]		Indicates theft warning horn request signal received from BCM on CAN communication line
HORN CHIRP [On/Off]		Indicates horn reminder signal received from BCM on CAN communication line
HOOD SW 2 [On/Off]		Indicates condition of hood switch 2

ACTIVE TEST

Test item	Description
HORN	This test is able to check horn operation [On].
FRONT WIPER	This test is able to check wiper motor operation [Hi/Lo/Off].
MOTOR FAN	This test is able to check cooling fan operation [4/3/2/1].
EXTERNAL LAMPS	This test is able to check external lamp operation [Fog/Hi/Lo/Tail/Off].

CAN DIAG SUPPORT MNTR

Refer to LAN-25, "CAN Diagnostic Support Monitor".

ECU DIAGNOSIS INFORMATION

ECM, IPDM E/R, BCM

List of ECU Reference

INFOID:0000000011135271

ECU		Reference
ECM	Reference Value	EC-92, "Reference Value" (except for Mexico) or EC-618, "Reference Value" (for Mexico)
	Fail-safe	EC-109, "Fail-safe" (except for Mexico) or EC-633, "Fail-safe" (for Mexico)
	DTC Inspection Priority Chart	EC-111, "DTC Inspection Priority Chart" (except for Mexico) orEC-634, "DTC Inspection Priority Chart" (for Mexico)
	DTC Index	EC-112, "DTC Index" (except for Mexico) or EC-636, "DTC Index" (for Mexico)
IPDM E/R	Reference Value	PCS-12, "Reference Value"
	Fail-safe	PCS-19, "Fail Safe"
	DTC Index	PCS-20, "DTC Index"
BCM	Reference Value	BCS-29, "Reference Value"
	Fail-safe	BCS-49, "Fail Safe"
	DTC Inspection Priority Chart	BCS-49, "DTC Inspection Priority Chart"
	DTC Index	BCS-51, "DTC Index"

WIRING DIAGRAM

ENGINE START FUNCTION

Wiring Diagram

INFOID:0000000011135272

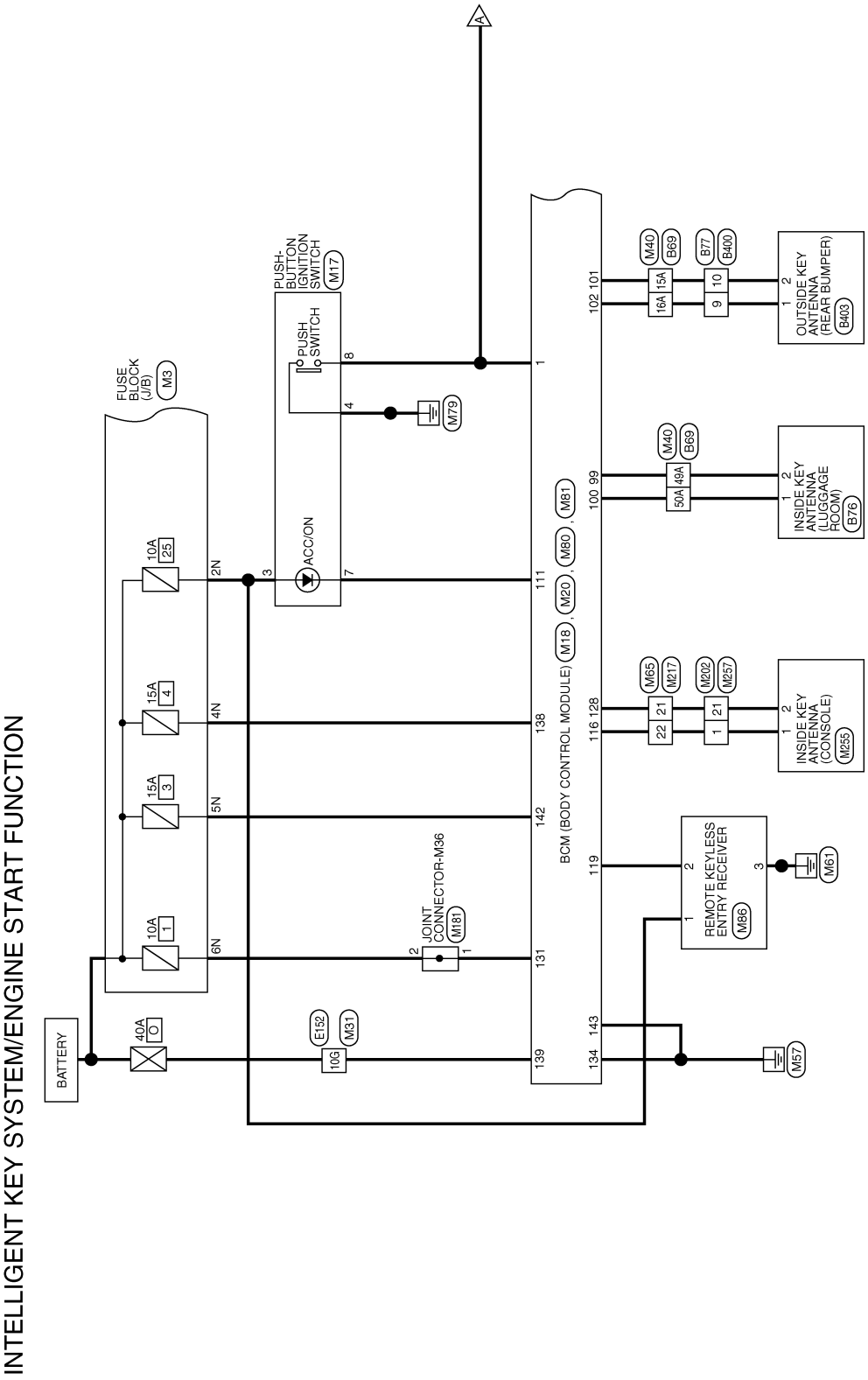

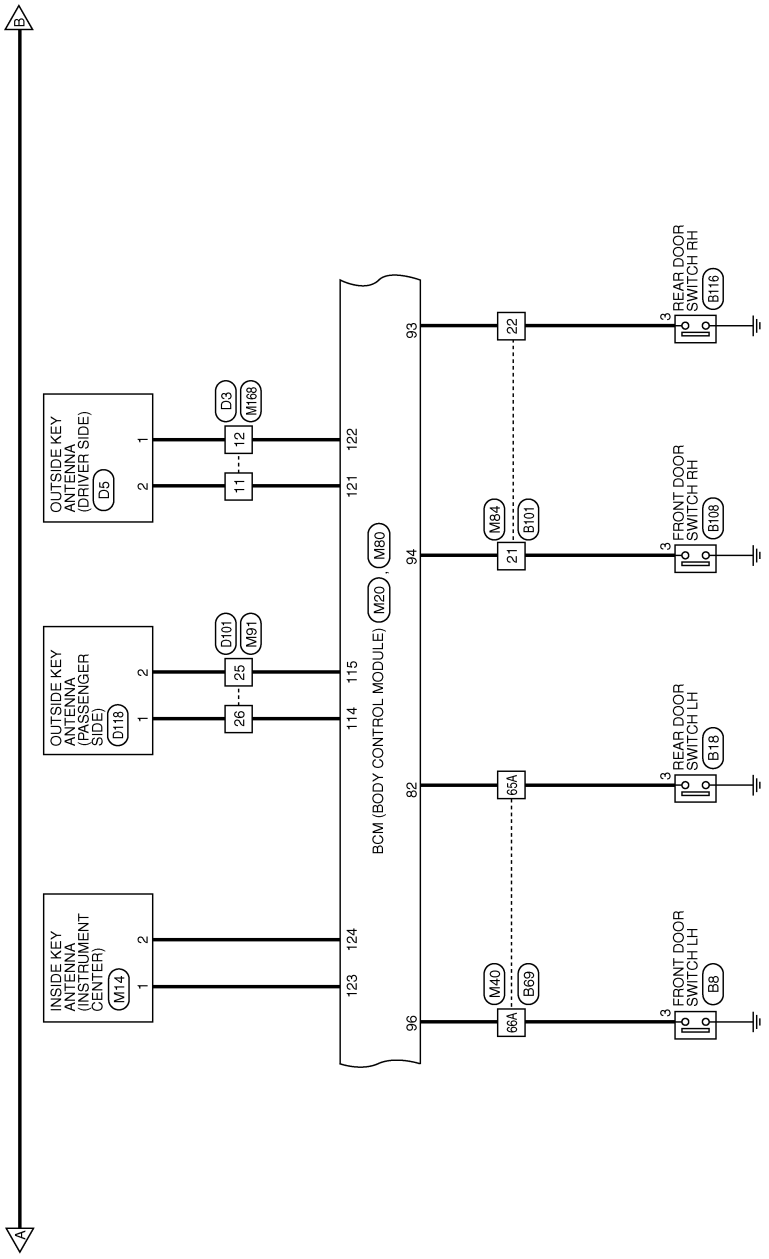

ABKWA2778GB

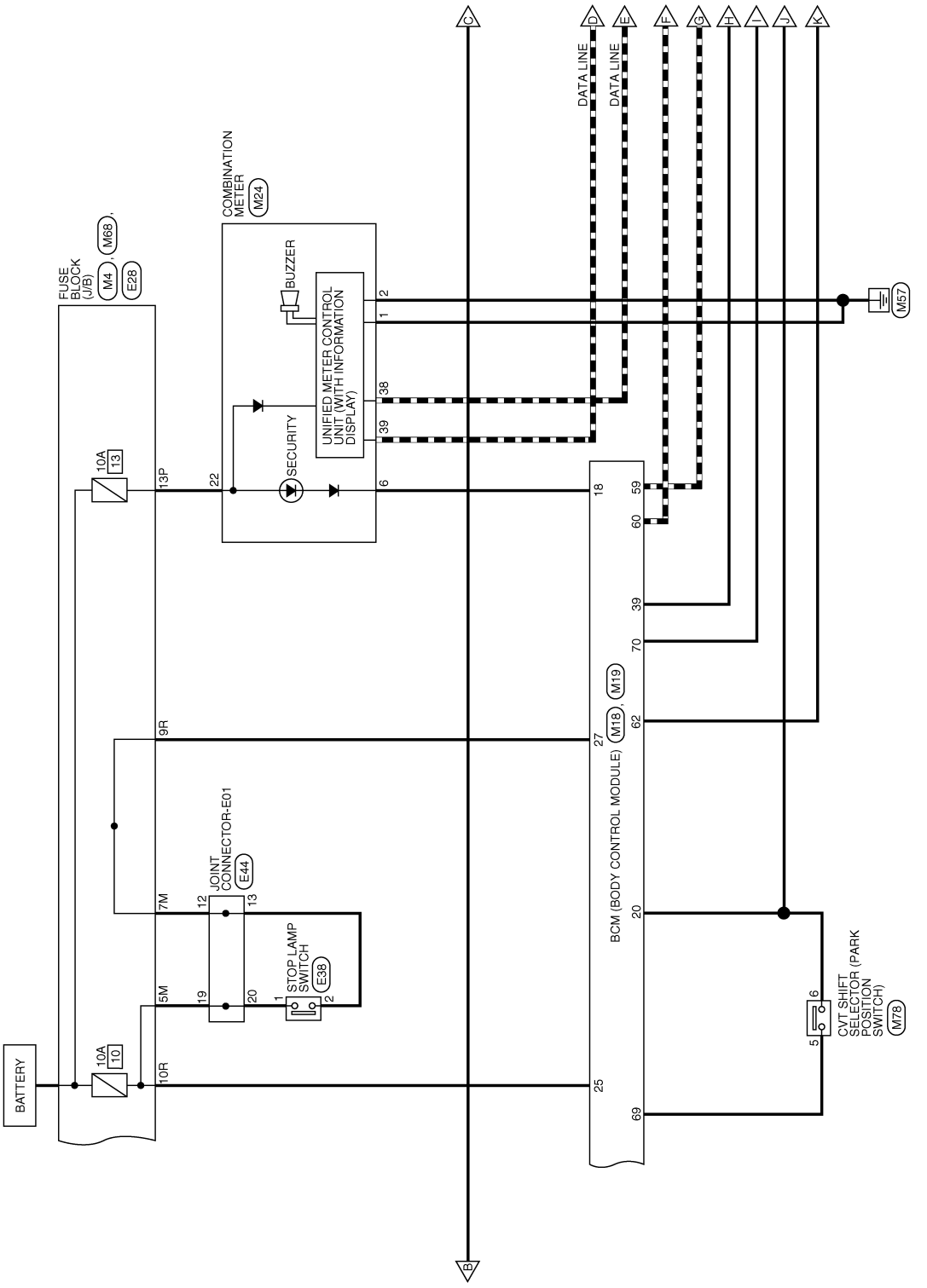
C
D
E
F
G
H
I
J
K
DATA LINE
DATA LINE
COMBINATION METER (M24)
BUZZER
UNIFIED METER CONTROL UNIT (WITH INFORMATION DISPLAY)
SECURITY
FUSE BLOCK (J/B) (M4), (M68), (E28)
10A 13
13P
22
2
1
38
39
6
M57
18
59
60
39
70
62
27
BCM (BODY CONTROL MODULE) (M18), (M19)
20
25
69
9R
10R
7M
5M
JOINT CONNECTOR-E01 (E44)
12
13
19
20
STOP LAMP SWITCH (E38)
1
2
CVT SHIFT SELECTOR (PARK POSITION SWITCH) (M78)
6
5
BATTERY
10A 10
B
ABKWA2779GB

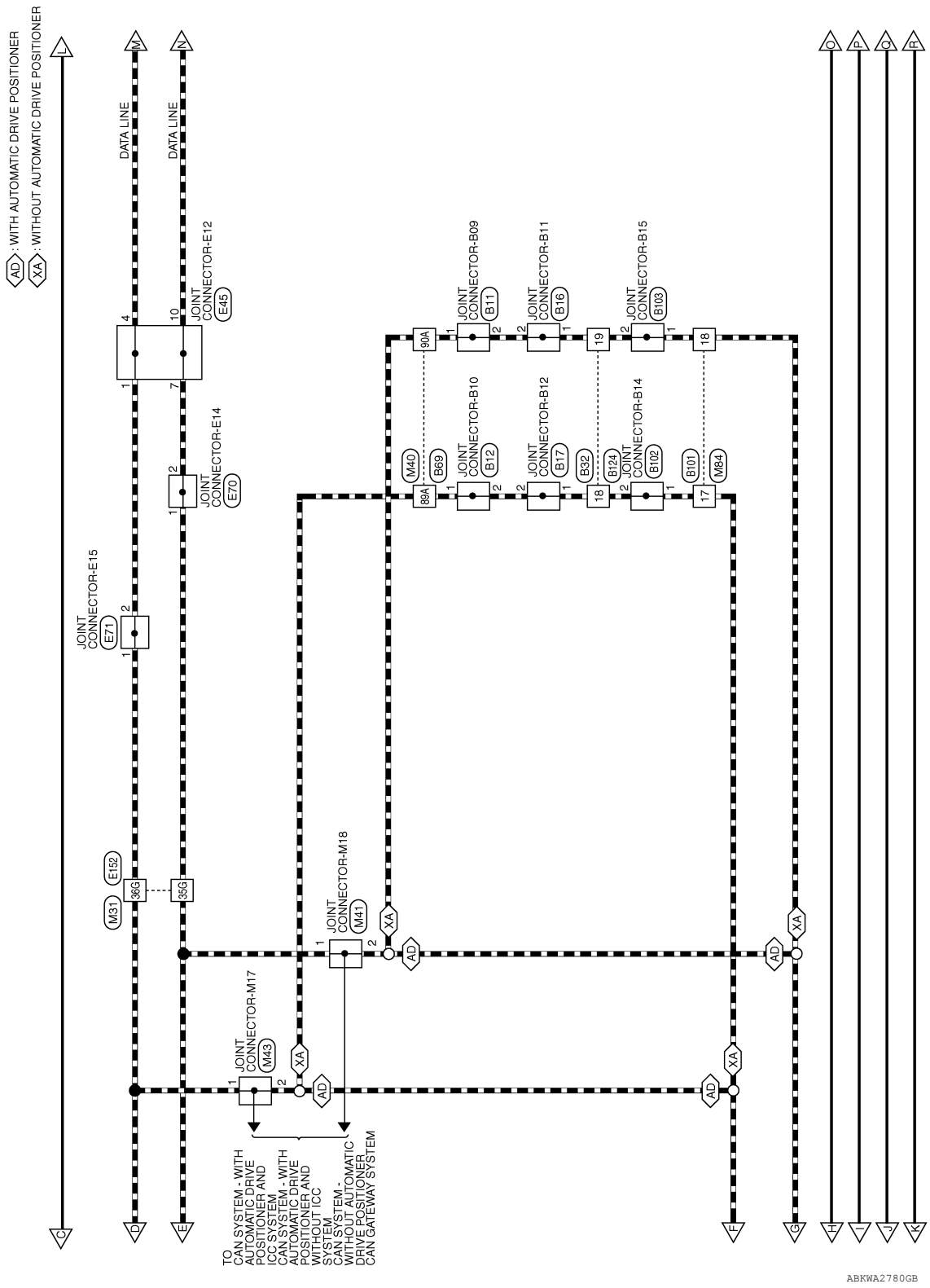
AD : WITH AUTOMATIC DRIVE POSITIONER
XA : WITHOUT AUTOMATIC DRIVE POSITIONER
DATA LINE
DATA LINE
JOINT CONNECTOR-E12
JOINT CONNECTOR-E14
JOINT CONNECTOR-E15
JOINT CONNECTOR-B09
JOINT CONNECTOR-B11
JOINT CONNECTOR-B15
JOINT CONNECTOR-B10
JOINT CONNECTOR-B12
JOINT CONNECTOR-B14
JOINT CONNECTOR-M18
JOINT CONNECTOR-M17
TO CAN SYSTEM - WITH AUTOMATIC DRIVE POSITIONER AND ICC SYSTEM
CAN SYSTEM - WITH AUTOMATIC DRIVE POSITIONER AND WITHOUT ICC SYSTEM
CAN SYSTEM - WITHOUT AUTOMATIC DRIVE POSITIONER
CAN GATEWAY SYSTEM
ABKWA2780GB

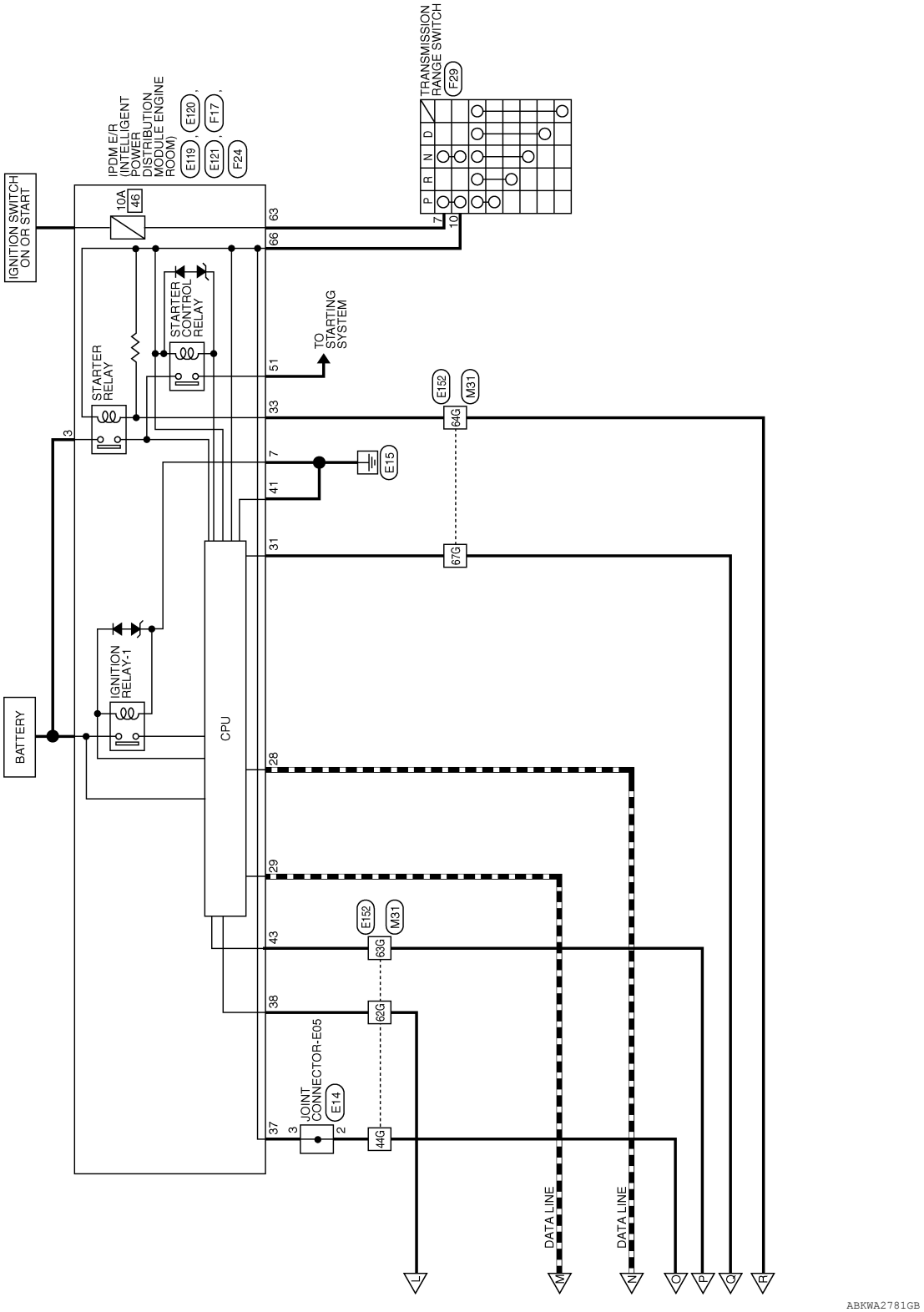
TRANSMISSION RANGE SWITCH
F29
P
R
N
D
10
7
IPDM E/R (INTELLIGENT POWER DISTRIBUTION MODULE ENGINE ROOM)
E120
F17
E119
E121
F24
IGNITION SWITCH ON OR START
10A 46
63
66
STARTER CONTROL RELAY
TO STARTING SYSTEM
STARTER RELAY
51
E152
M31
64G
33
3
7
E15
41
31
67G
IGNITION RELAY-1
BATTERY
CPU
28
29
E152
M31
43
63G
38
62G
JOINT CONNECTOR-E05
E14
37
3
2
44G
DATA LINE
DATA LINE
L
M
N
O
P
Q
R
ABKWA2781GB

INTELLIGENT KEY SYSTEM/ENGINE START FUNCTION CONNECTORS

Connector No.	M3
Connector Name	FUSE BLOCK (J/B)
Connector Color	WHITE

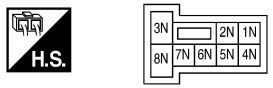

Terminal No.	Color of Wire	Signal Name
2N	BG	–
4N	V	–
5N	Y	–
6N	W	–

Connector No.	M4
Connector Name	FUSE BLOCK (J/B)
Connector Color	WHITE

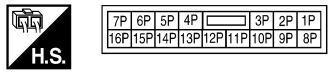

Terminal No.	Color of Wire	Signal Name
13P	W	–

Connector No.	M14
Connector Name	INSIDE KEY ANTENNA (INSTRUMENT CENTER)
Connector Color	GRAY

Terminal No.	Color of Wire	Signal Name
1	W	–
2	G	–

Connector No.	M17
Connector Name	PUSH-BUTTON IGNITION SWITCH
Connector Color	WHITE

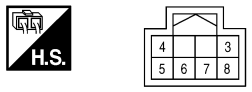

Terminal No.	Color of Wire	Signal Name
3	BG	–
4	B	–
7	P	–
8	G	–

Connector No.	M18
Connector Name	BCM (BODY CONTROL MODULE)
Connector Color	GREEN

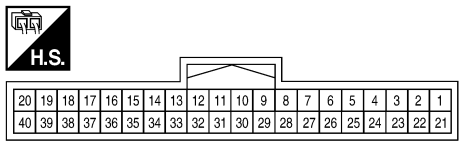

Terminal No.	Color of Wire	Signal Name
1	G	ENG START SW
18	V	SECURITY INDICATOR
20	W	SHIFT P
25	W	BRAKE SW FUSE
27	G	BRAKE SW LAMP
39	G	SHIFT N/P

Connector No.	M19
Connector Name	BCM (BODY CONTROL MODULE)
Connector Color	BLACK

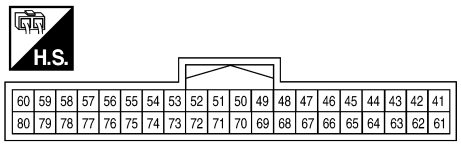

Terminal No.	Color of Wire	Signal Name
59	P	CAN-L
60	L	CAN-H
62	W	STARTER RELAY OUT
69	G	AT DEVICE OUT
70	P	IGN USM OUT 1

ABKIA3556GB

Connector No.	M20
Connector Name	BCM (BODY CONTROL MODULE)
Connector Color	GRAY

H.S.

92	91	90	89	88	87	86	85	84	83	82	81
104	103	102	101	100	99	98	97	96	95	94	93

Terminal No.	Color of Wire	Signal Name
82	W	RL DOOR SW
93	R	RR DOOR SW
94	G	AS DOOR SW
96	BG	DR DOOR SW
99	P	ROOM ANT 3 B
100	W	ROOM ANT 3 A
101	R	REAR BUMPER ANT B
102	G	REAR BUMPER ANT A

Connector No.	M24
Connector Name	COMBINATION METER
Connector Color	WHITE

H.S.

20	19	18	17	16	15	14	13	12	11	10	9	8	7	6	5	4	3	2	1
40	39	38	37	36	35	34	33	32	31	30	29	28	27	26	25	24	23	22	21

Terminal No.	Color of Wire	Signal Name
1	B	GND 1
2	B	GND 2
6	V	SECURITY
22	W	BAT
38	P	CAN-L
39	L	CAN-H

Terminal No.	Color of Wire	Signal Name
10G	W	–
35G	P	–
36G	L	–
44G	G	–
62G	G	–
63G	P	–
64G	W	–
67G	W	–

Connector No.	M31
Connector Name	WIRE TO WIRE
Connector Color	WHITE

H.S.

1G	2G	3G	4G	5G
6G	7G	8G	9G	10G

11G	12G	13G	14G	15G	16G	17G	18G	19G	20G	21G
22G	23G	24G	25G	26G	27G	28G	29G	30G		

31G	32G	33G	34G	35G	36G	37G	38G	39G	40G	41G
42G	43G	44G	45G	46G	47G	48G	49G	50G		

51G	52G	53G	54G	55G	56G	57G	58G	59G	60G	61G
62G	63G	64G	65G	66G	67G	68G	69G	70G		

71G	72G	73G	74G	75G	76G	77G	78G	79G	80G	81G
82G	83G	84G	85G	86G	87G	88G	89G	90G		

91G	92G	93G	94G	95G
96G	97G	98G	99G	100G

ABKIA4653GB

Connector No.	M40
Connector Name	WIRE TO WIRE
Connector Color	GRAY

H.S.

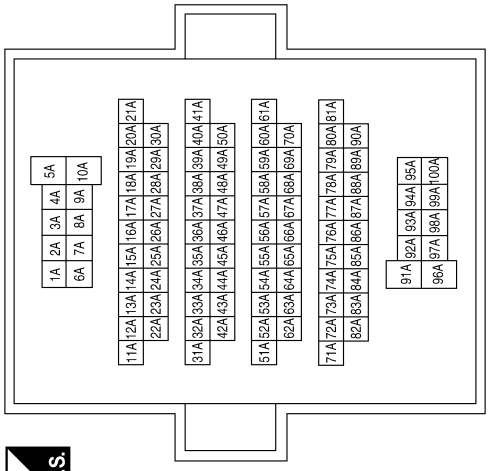

Terminal No.	Color of Wire	Signal Name
15A	R	–
16A	G	–
49A	P	–
50A	W	–
65A	W	–
66A	BG	–
89A	L	–
90A	P	–

Connector No.	M41
Connector Name	JOINT CONNECTOR-M18
Connector Color	WHITE

H.S.

Terminal No.	Color of Wire	Signal Name
1	P	–
2	P	–

Connector No.	M43
Connector Name	JOINT CONNECTOR-M17
Connector Color	WHITE

H.S.

Terminal No.	Color of Wire	Signal Name
1	L	–
2	L	–

Connector No.	M65
Connector Name	WIRE TO WIRE
Connector Color	WHITE

H.S.

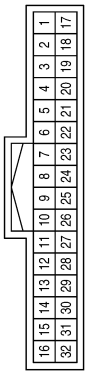

Terminal No.	Color of Wire	Signal Name
21	R	–
22	W	–

Connector No.	M68
Connector Name	FUSE BLOCK (J/B)
Connector Color	BROWN

H.S.

Terminal No.	Color of Wire	Signal Name
9R	G	–
10R	W	–

ABKIA4654GB

Connector No.	M78
Connector Name	CVT SHIFT SELECTOR
Connector Color	WHITE

H.S.

1	2	3	4	5	6
7	8	9	10	11	12

Terminal No.	Color of Wire	Signal Name
5	G	–
6	W	–

Connector No.	M80
Connector Name	BCM (BODY CONTROL MODULE)
Connector Color	BLACK

H.S.

116	115	114	113	112	111	110	109	108	107	106	105
128	127	126	125	124	123	122	121	120	119	118	117

Terminal No.	Color of Wire	Signal Name
111	P	ACC LED
114	W	AS DOOR ANT A
115	BG	AS DOOR ANT B
116	W	ROOM ANT 2 A
119	R	RF NIMOCO
121	G	DR DOOR ANT B
122	P	DR DOOR ANT A
123	W	ROOM ANT 1 A
124	G	ROOM ANT 1 B
128	R	ROOM ANT 2 B

Connector No.	M81
Connector Name	BCM (BODY CONTROL MODULE)
Connector Color	WHITE

H.S.

137	136	135	134	133	132	131	130	129
143	142	141	140	139	138			

Terminal No.	Color of Wire	Signal Name
131	W	BAT BCM FUSE
134	B	GND 2
138	V	BAT REAR DOOR
139	W	BAT POWER F/L
142	Y	BAT FRONT DOOR
143	B	GND 1

Connector No.	M84
Connector Name	WIRE TO WIRE
Connector Color	WHITE

H.S.

16	15	14	13	12	11	10	9	8	7	6	5	4	3	2	1
32	31	30	29	28	27	26	25	24	23	22	21	20	19	18	17

Terminal No.	Color of Wire	Signal Name
17	L	–
18	P	–
21	G	–
22	R	–

Connector No.	M86
Connector Name	REMOTE KEYLESS ENTRY RECEIVER
Connector Color	BLACK

H.S.

1	2	3	4

Terminal No.	Color of Wire	Signal Name
1	BG	–
2	R	–
3	GR	–

Connector No.	M91
Connector Name	WIRE TO WIRE
Connector Color	WHITE

H.S.

1	2	3	4	5	6	7	8	9	10	11	12	13	14	15	16
17	18	19	20	21	22	23	24	25	26	27	28	29	30	31	32

Terminal No.	Color of Wire	Signal Name
25	BG	–
26	W	–

ABKIA4655GB

Connector No.	M168
Connector Name	WIRE TO WIRE
Connector Color	WHITE

H.S.

1	2	3	4	5	6	7	8	9	10	11	12	13	14	15	16	17	18	19	20
21	22	23	24	25	26	27	28	29	30	31	32	33	34	35	36	37	38	39	40

Terminal No.	Color of Wire	Signal Name
11	G	–
12	P	–

Connector No.	M181
Connector Name	JOINT CONNECTOR-M36
Connector Color	WHITE

H.S.

4	3	2	1

Terminal No.	Color of Wire	Signal Name
1	W	–
2	W	–

Connector No.	M202
Connector Name	WIRE TO WIRE
Connector Color	WHITE

H.S.

1	2	3	4	5	6	7	8	9	10	11	12	13	14	15	16	17	18	19	20
21	22	23	24	25	26	27	28	29	30	31	32	33	34	35	36	37	38	39	40

Terminal No.	Color of Wire	Signal Name
1	W	–
21	B	–

Connector No.	M217
Connector Name	WIRE TO WIRE
Connector Color	WHITE

H.S.

1	2	3	4	5	6	7	8	9	10	11	12	13	14	15	16
17	18	19	20	21	22	23	24	25	26	27	28	29	30	31	32

Terminal No.	Color of Wire	Signal Name
21	B	–
22	W	–

Connector No.	M255
Connector Name	INSIDE KEY ANTENNA (CONSOLE)
Connector Color	GRAY

H.S.

1	2

Terminal No.	Color of Wire	Signal Name
1	W	–
2	B	–

Connector No.	M257
Connector Name	WIRE TO WIRE
Connector Color	WHITE

H.S.

20	19	18	17	16	15	14	13	12	11	10	9	8	7	6	5	4	3	2	1
40	39	38	37	36	35	34	33	32	31	30	29	28	27	26	25	24	23	22	21

Terminal No.	Color of Wire	Signal Name
1	W	–
21	B	–

ABKIA4656GB

Connector No.	E14
Connector Name	JOINT CONNECTOR-E05
Connector Color	BLACK

H.S.

12	11	10	9	8	7	6	5	4	3	2	1

Terminal No.	Color of Wire	Signal Name
2	W	–
3	W	–

Connector No.	E28
Connector Name	FUSE BLOCK (J/B)
Connector Color	WHITE

H.S.

4M	3M		2M	1M
10M	9M	8M	7M	6M	5M

Terminal No.	Color of Wire	Signal Name
5M	Y	–
7M	P	–

Connector No.	E38
Connector Name	STOP LAMP SWITCH
Connector Color	WHITE

H.S.

3	4
1	2

Terminal No.	Color of Wire	Signal Name
1	Y	–
2	P	–

Connector No.	E44
Connector Name	JOINT CONNECTOR-E01
Connector Color	WHITE

H.S.

11	10	9	8	7	6	5	4	3	2	1
22	21	20	19	18	17	16	15	14	13	12
33	32	31	30	29	28	27	26	25	24	23

Terminal No.	Color of Wire	Signal Name
12	P	–
13	P	–
19	Y	–
20	Y	–

Connector No.	E45
Connector Name	JOINT CONNECTOR-E12
Connector Color	BLUE

H.S.

12	11	10	9	8	7	6	5	4	3	2	1

Terminal No.	Color of Wire	Signal Name
1	L	–
4	L	–
7	P	–
10	P	–

Connector No.	E70
Connector Name	JOINT CONNECTOR-E14
Connector Color	BLACK

H.S.

6	5	4	3	2	1

Terminal No.	Color of Wire	Signal Name
1	P	–
2	P	–

ABKIA4657GB

Terminal No.	Color of Wire	Signal Name
41	B	GND (SIGNAL)
43	L	IGN SIGNAL

Connector No.	E119
Connector Name	IPDM E/R (INTELLIGENT POWER DISTRIBUTION MODULE ENGINE ROOM)
Connector Color	WHITE

H.S.

19	20	21	22	23	24	25	26	27	28	29	30	31	32	33	34
35	36	37	38	39	40	41	42	43	44	45	46	47	48	49	50

Terminal No.	Color of Wire	Signal Name
28	P	CAN-L
29	L	CAN-H
31	BG	DETENT SW
33	R	START CONT
37	W	CLUTCH I/L SW
38	P	PUSH START SW

Connector No.	E71
Connector Name	JOINT CONNECTOR-E15
Connector Color	BLACK

H.S.

6	5	4	3	2	1

Terminal No.	Color of Wire	Signal Name
1	L	–
2	L	–

Connector No.	E121
Connector Name	IPDM E/R (INTELLIGENT POWER DISTRIBUTION MODULE ENGINE ROOM)
Connector Color	WHITE

H.S.

7	8		9	10	11
12	13	14	15	16	17	18

Terminal No.	Color of Wire	Signal Name
7	B	GND (POWER)

Connector No.	E120
Connector Name	IPDM E/R (INTELLIGENT POWER DISTRIBUTION MODULE ENGINE ROOM)
Connector Color	WHITE

H.S.

3	4
5	6

Terminal No.	Color of Wire	Signal Name
3	G	F/L IGNSW

ABKIA6354GB

Connector No.	E152
Connector Name	WIRE TO WIRE
Connector Color	WHITE

H.S.

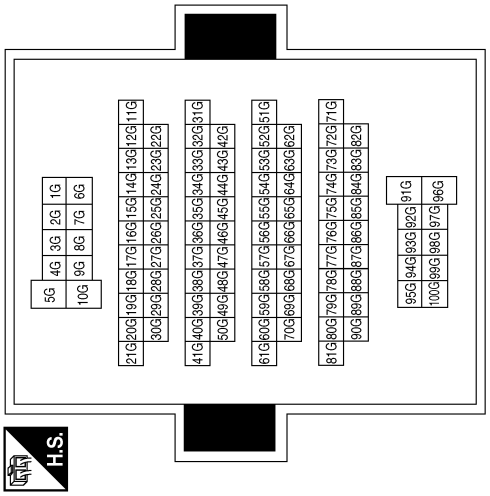

Terminal No.	Color of Wire	Signal Name
10G	P	–
35G	P	–
36G	L	–
44G	W	–
62G	P	–
63G	L	–
64G	R	–
67G	BG	–

Connector No.	F17
Connector Name	IPDM E/R (INTELLIGENT POWER DISTRIBUTION MODULE ENGINE ROOM)
Connector Color	BLACK

H.S.

Terminal No.	Color of Wire	Signal Name
51	W	STARTER MOTOR

Connector No.	F24
Connector Name	IPDM E/R (INTELLIGENT POWER DISTRIBUTION MODULE ENGINE ROOM)
Connector Color	WHITE

H.S.

Terminal No.	Color of Wire	Signal Name
63	L	INHIBIT SW
66	G	NPSW

Connector No.	F29
Connector Name	TRANSMISSION RANGE SWITCH
Connector Color	BLACK

H.S.

Terminal No.	Color of Wire	Signal Name
7	L	–
10	G	–

Connector No.	B8
Connector Name	FRONT DOOR SWITCH LH
Connector Color	WHITE

H.S.

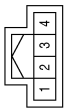

Terminal No.	Color of Wire	Signal Name
3	L	–

ABKIA6355GB

Connector No.	B11
Connector Name	JOINT CONNECTOR-B09
Connector Color	WHITE

H.S.

Terminal No.	Color of Wire	Signal Name
1	P	–
2	P	–

Connector No.	B12
Connector Name	JOINT CONNECTOR-B10
Connector Color	WHITE

H.S.

Terminal No.	Color of Wire	Signal Name
1	L	–
2	L	–

Connector No.	B16
Connector Name	JOINT CONNECTOR-B11
Connector Color	WHITE

H.S.

Terminal No.	Color of Wire	Signal Name
1	P	–
2	P	–

Connector No.	B17
Connector Name	JOINT CONNECTOR-B12
Connector Color	WHITE

H.S.

Terminal No.	Color of Wire	Signal Name
1	L	–
2	L	–

Connector No.	B18
Connector Name	REAR DOOR SWITCH LH
Connector Color	WHITE

H.S.

Terminal No.	Color of Wire	Signal Name
3	SB	–

Connector No.	B32
Connector Name	WIRE TO WIRE
Connector Color	WHITE

H.S.

Terminal No.	Color of Wire	Signal Name
18	L	–
19	P	–

ABKIA6356GB

Connector No.	B76
Connector Name	INSIDE KEY ANTENNA (LUGGAGE ROOM)
Connector Color	GRAY

H.S.

Terminal No.	Color of Wire	Signal Name
1	W	–
2	G	–

Connector No.	B102
Connector Name	JOINT CONNECTOR-B14
Connector Color	WHITE

H.S.

Terminal No.	Color of Wire	Signal Name
1	L	–
2	L	–

Terminal No.	Color of Wire	Signal Name
15A	G	–
16A	W	–
49A	G	–
50A	W	–
65A	SB	–
66A	L	–
89A	L	–
90A	P	–

Connector No.	B101
Connector Name	WIRE TO WIRE
Connector Color	WHITE

H.S.

Terminal No.	Color of Wire	Signal Name
17	L	–
18	P	–
21	LG	–
22	LG	–

Connector No.	B69
Connector Name	WIRE TO WIRE
Connector Color	GRAY

H.S.

Connector No.	B77
Connector Name	WIRE TO WIRE
Connector Color	WHITE

H.S.

Terminal No.	Color of Wire	Signal Name
9	W	–
10	G	–

ABKIA6357GB

Connector No.	B103
Connector Name	JOINT CONNECTOR-B15
Connector Color	WHITE

H.S.

Terminal No.	Color of Wire	Signal Name
1	P	–
2	P	–

Connector No.	B108
Connector Name	FRONT DOOR SWITCH RH
Connector Color	WHITE

H.S.

Terminal No.	Color of Wire	Signal Name
3	LG	–

Connector No.	B116
Connector Name	REAR DOOR SWITCH RH
Connector Color	WHITE

H.S.

Terminal No.	Color of Wire	Signal Name
3	LG	–

Connector No.	B124
Connector Name	WIRE TO WIRE
Connector Color	WHITE

H.S.

Terminal No.	Color of Wire	Signal Name
18	L	–
19	P	–

Connector No.	B400
Connector Name	WIRE TO WIRE
Connector Color	WHITE

H.S.

Terminal No.	Color of Wire	Signal Name
9	W	–
10	G	–

Connector No.	B403
Connector Name	OUTSIDE KEY ANTENNA (REAR BUMPER)
Connector Color	GRAY

H.S.

Terminal No.	Color of Wire	Signal Name
1	W	–
2	G	–

ABKIA6358GB

Connector No.	D3
Connector Name	WIRE TO WIRE
Connector Color	WHITE

H.S.

20	19	18	17	16	15	14	13	12	11	10	9	8	7	6	5	4	3	2	1
40	39	38	37	36	35	34	33	32	31	30	29	28	27	26	25	24	23	22	21

Terminal No.	Color of Wire	Signal Name
11	Y	–
12	LG	–

Connector No.	D5
Connector Name	OUTSIDE KEY ANTENNA (DRIVER SIDE)
Connector Color	GRAY

H.S.

Terminal No.	Color of Wire	Signal Name
1	LG	–
2	Y	–

Connector No.	D101
Connector Name	WIRE TO WIRE
Connector Color	WHITE

H.S.

16	15	14	13	12	11	10	9	8	7	6	5	4	3	2	1
32	31	30	29	28	27	26	25	24	23	22	21	20	19	18	17

Terminal No.	Color of Wire	Signal Name
25	Y	–
26	LG	–

Connector No.	D118
Connector Name	OUTSIDE KEY ANTENNA (PASSENGER SIDE)
Connector Color	GRAY

H.S.

Terminal No.	Color of Wire	Signal Name
1	LG	–
2	Y	–

ABKIA6359GB

INFINITI VEHICLE IMMOBILIZER SYSTEM-NATS

Wiring Diagram

INFOID:0000000011135273

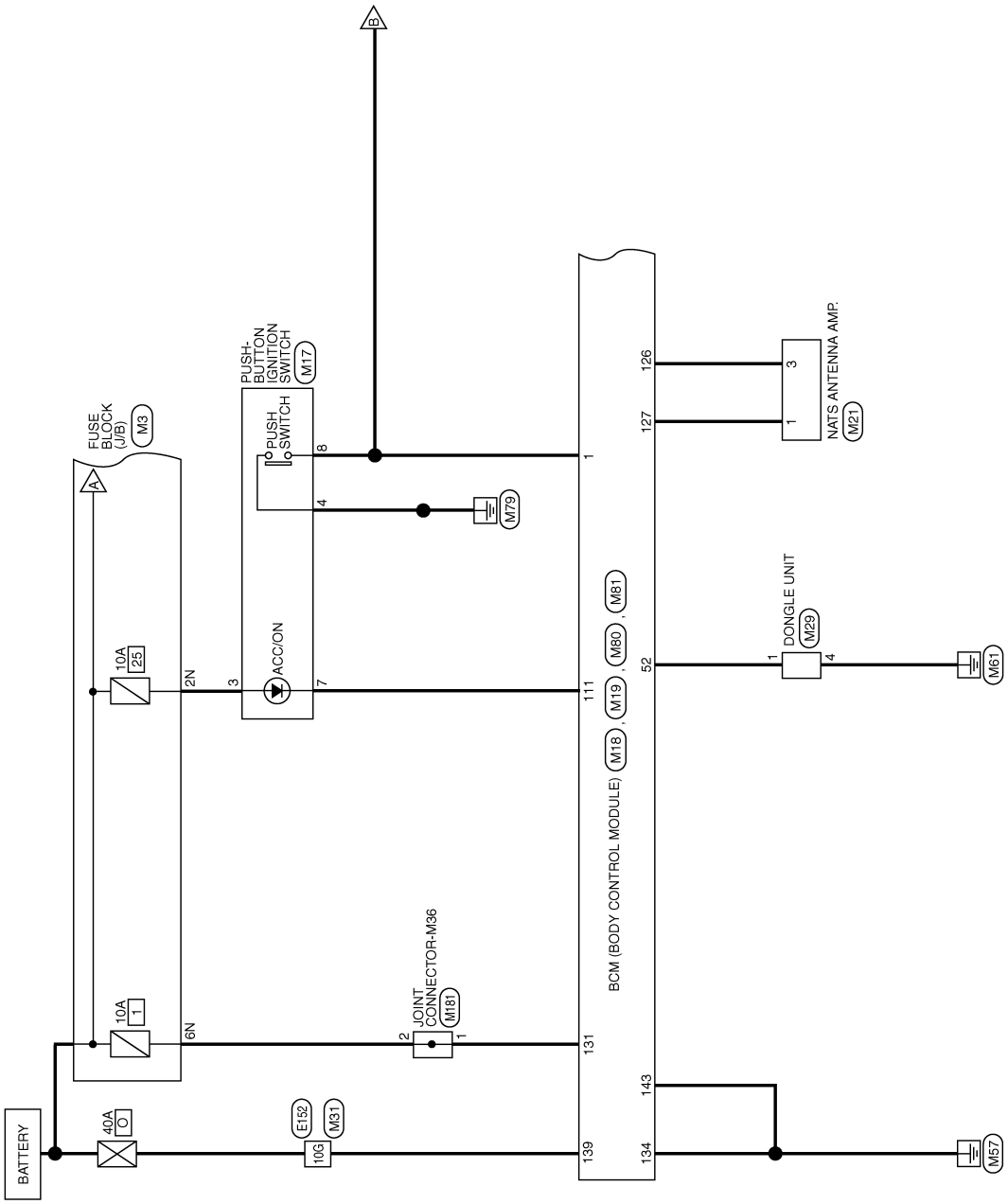

IVIS

ABKWA2770GB

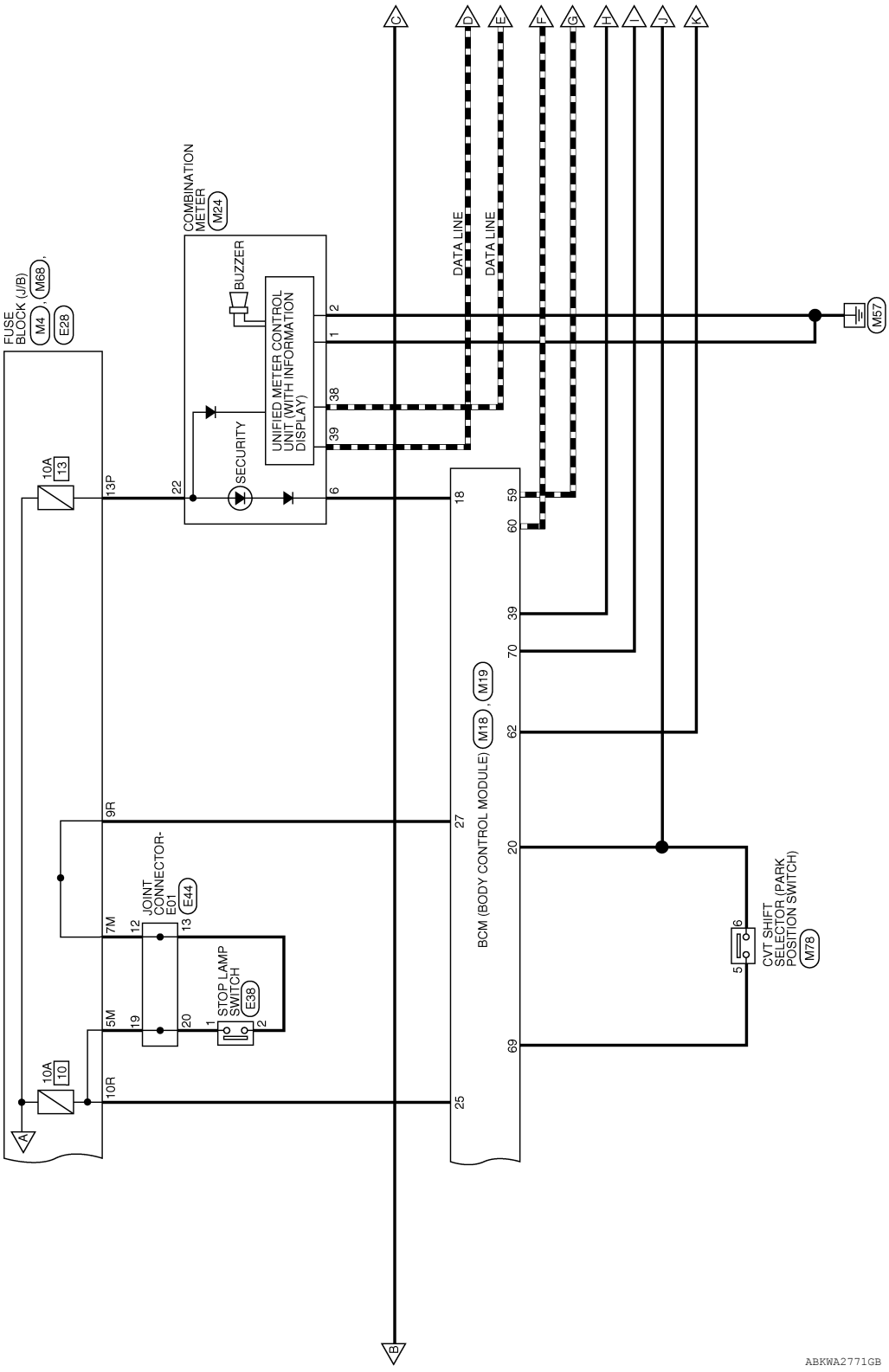
C
D
E
F
G
H
I
J
K
DATA LINE
DATA LINE
COMBINATION METER (M24)
BUZZER
UNIFIED METER CONTROL UNIT (WITH INFORMATION DISPLAY)
SECURITY
2
1
38
39
6
M57
FUSE BLOCK (J/B) (M68), (M4), (E28)
10A 13
13P
22
10A 10
10R
9R
7M
5M
JOINT CONNECTOR-E01 (E44)
12
13
19
20
STOP LAMP SWITCH (E38)
1
2
BCM (BODY CONTROL MODULE) (M18), (M19)
18
59
60
39
70
62
27
20
69
25
CVT SHIFT SELECTOR (PARK POSITION SWITCH) (M78)
6
5
A
B
ABKWA2771GB

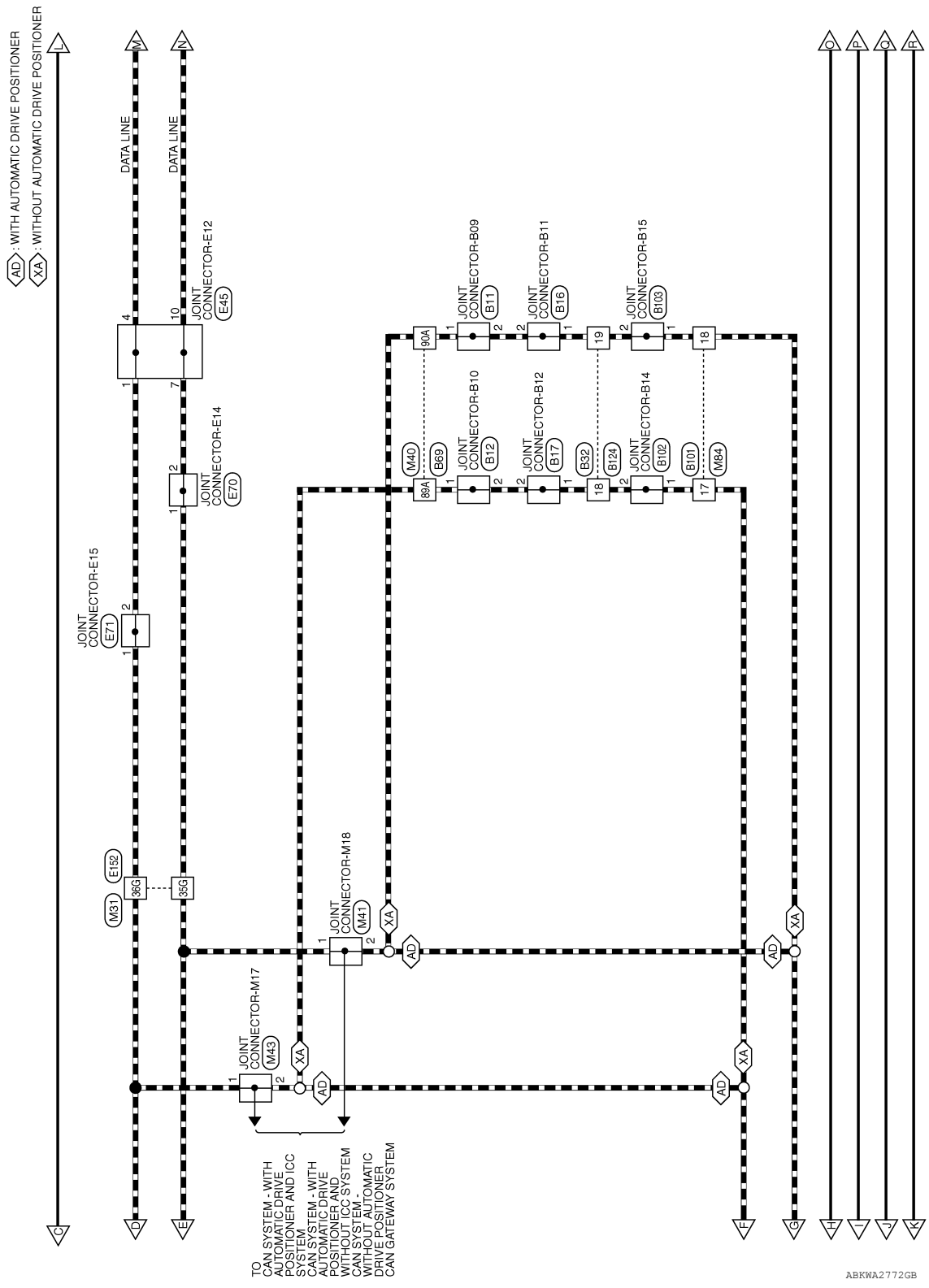
AD : WITH AUTOMATIC DRIVE POSITIONER
XA : WITHOUT AUTOMATIC DRIVE POSITIONER
DATA LINE
DATA LINE
JOINT CONNECTOR-E12
JOINT CONNECTOR-E14
JOINT CONNECTOR-E15
JOINT CONNECTOR-B09
JOINT CONNECTOR-B11
JOINT CONNECTOR-B15
JOINT CONNECTOR-B10
JOINT CONNECTOR-B12
JOINT CONNECTOR-B14
JOINT CONNECTOR-M18
JOINT CONNECTOR-M17
TO CAN SYSTEM - WITH AUTOMATIC DRIVE POSITIONER AND ICC SYSTEM
CAN SYSTEM - WITH AUTOMATIC DRIVE POSITIONER AND WITHOUT ICC SYSTEM
CAN SYSTEM - WITHOUT AUTOMATIC DRIVE POSITIONER
CAN GATEWAY SYSTEM
ABKWA2772GB

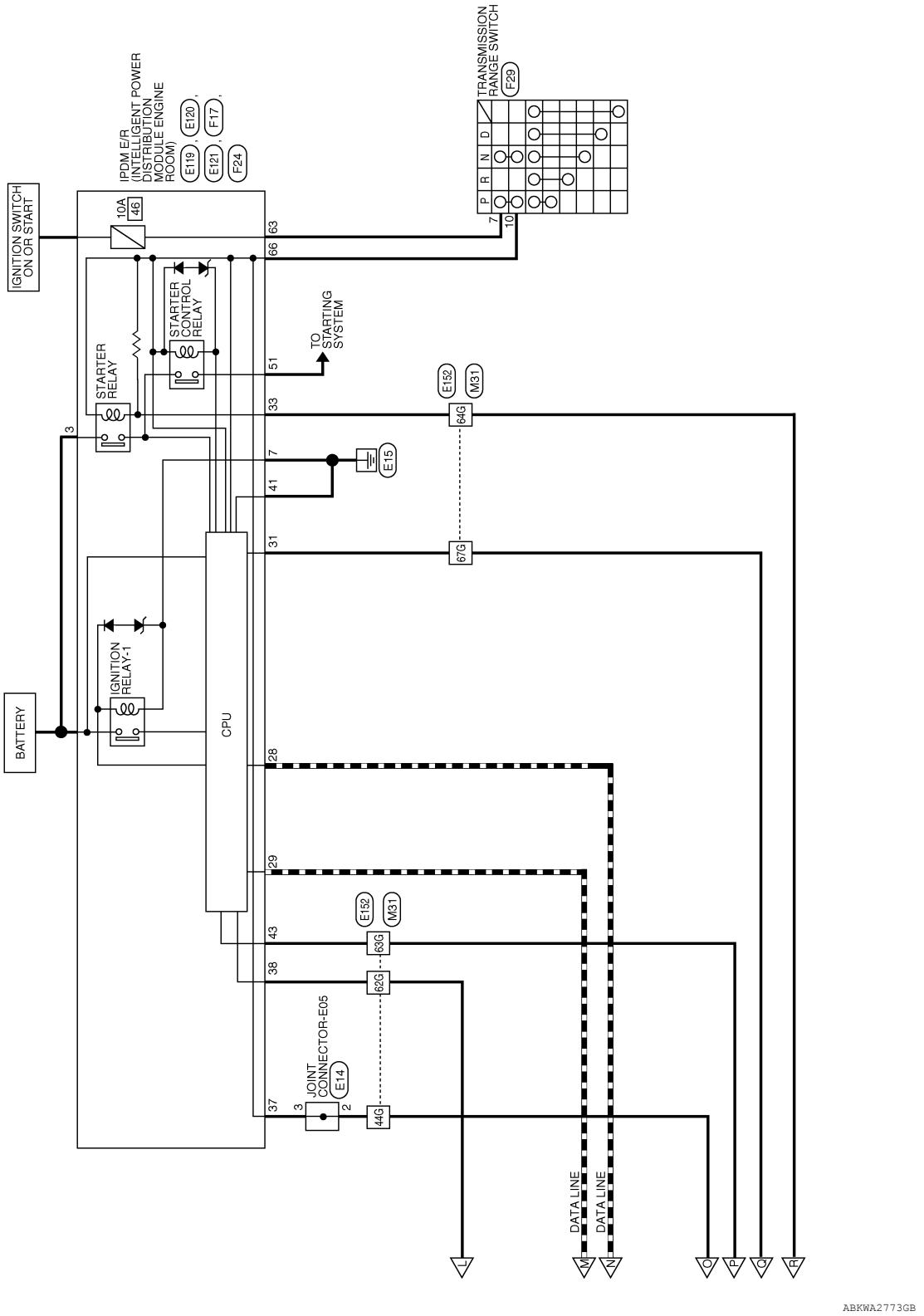

ABKWA2773GB

IVIS CONNECTORS

Connector No.	M3
Connector Name	FUSE BLOCK (J/B)
Connector Color	WHITE

H.S.

3N		2N	1N
8N	7N	6N	5N	4N

Terminal No.	Color of Wire	Signal Name
2N	BG	–
6N	W	–

Connector No.	M4
Connector Name	FUSE BLOCK (J/B)
Connector Color	WHITE

H.S.

7P	6P	5P	4P		3P	2P	1P
16P	15P	14P	13P	12P	11P	10P	9P	8P

Terminal No.	Color of Wire	Signal Name
13P	W	–

Connector No.	M17
Connector Name	PUSH-BUTTON IGNITION SWITCH
Connector Color	WHITE

H.S.

4			3
5	6	7	8

Terminal No.	Color of Wire	Signal Name
3	BG	–
4	B	–
7	P	–
8	G	–

Connector No.	M18
Connector Name	BCM (BODY CONTROL MODULE)
Connector Color	GREEN

H.S.

20	19	18	17	16	15	14	13	12	11	10	9	8	7	6	5	4	3	2	1
40	39	38	37	36	35	34	33	32	31	30	29	28	27	26	25	24	23	22	21

Terminal No.	Color of Wire	Signal Name
1	G	ENG START SW
18	V	SECURITY INDICATOR
20	W	SHIFT P
25	W	BRAKE SW FUSE
27	G	BRAKE SW LAMP
39	G	SHIFT N/P

Connector No.	M19
Connector Name	BCM (BODY CONTROL MODULE)
Connector Color	BLACK

H.S.

60	59	58	57	56	55	54	53	52	51	50	49	48	47	46	45	44	43	42	41
80	79	78	77	76	75	74	73	72	71	70	69	68	67	66	65	64	63	62	61

Terminal No.	Color of Wire	Signal Name
52	W	AUDIO DONGLE
59	P	CAN-L
60	L	CAN-H
62	W	STARTER RELAY OUT
69	G	AT DEVICE OUT
70	P	IGN USM OUT 1

Connector No.	M21
Connector Name	NATS ANTENNA AMP.
Connector Color	WHITE

H.S.

1		
2		
3		

Terminal No.	Color of Wire	Signal Name
1	BG	–
3	P	–

ABKIA6351GB

Connector No.	M24
Connector Name	COMBINATION METER
Connector Color	WHITE

H.S.

20	19	18	17	16	15	14	13	12	11	10	9	8	7	6	5	4	3	2	1
40	39	38	37	36	35	34	33	32	31	30	29	28	27	26	25	24	23	22	21

Terminal No.	Color of Wire	Signal Name
1	B	GND 1
2	B	GND 2
6	V	SECURITY
22	W	BAT
38	P	CAN-L
39	L	CAN-H

Connector No.	M29
Connector Name	DONGLE UNIT
Connector Color	WHITE

H.S.

1	2	3	4

Terminal No.	Color of Wire	Signal Name
1	W	–
4	B	–

Connector No.	M31
Connector Name	WIRE TO WIRE
Connector Color	WHITE

H.S.

1G	2G	3G	4G	5G
6G	7G	8G	9G	10G

11G	12G	13G	14G	15G	16G	17G	18G	19G	20G	21G
22G	23G	24G	25G	26G	27G	28G	29G	30G		
31G	32G	33G	34G	35G	36G	37G	38G	39G	40G	41G
42G	43G	44G	45G	46G	47G	48G	49G	50G		
51G	52G	53G	54G	55G	56G	57G	58G	59G	60G	61G
62G	63G	64G	65G	66G	67G	68G	69G	70G		
71G	72G	73G	74G	75G	76G	77G	78G	79G	80G	81G
82G	83G	84G	85G	86G	87G	88G	89G	90G		
91G	92G	93G	94G	95G						
96G	97G	98G	99G	100G						

Terminal No.	Color of Wire	Signal Name
10G	W	–
35G	P	–
36G	L	–
44G	G	–
62G	G	–
63G	P	–
64G	W	–
67G	W	–

ABKIA6352GB

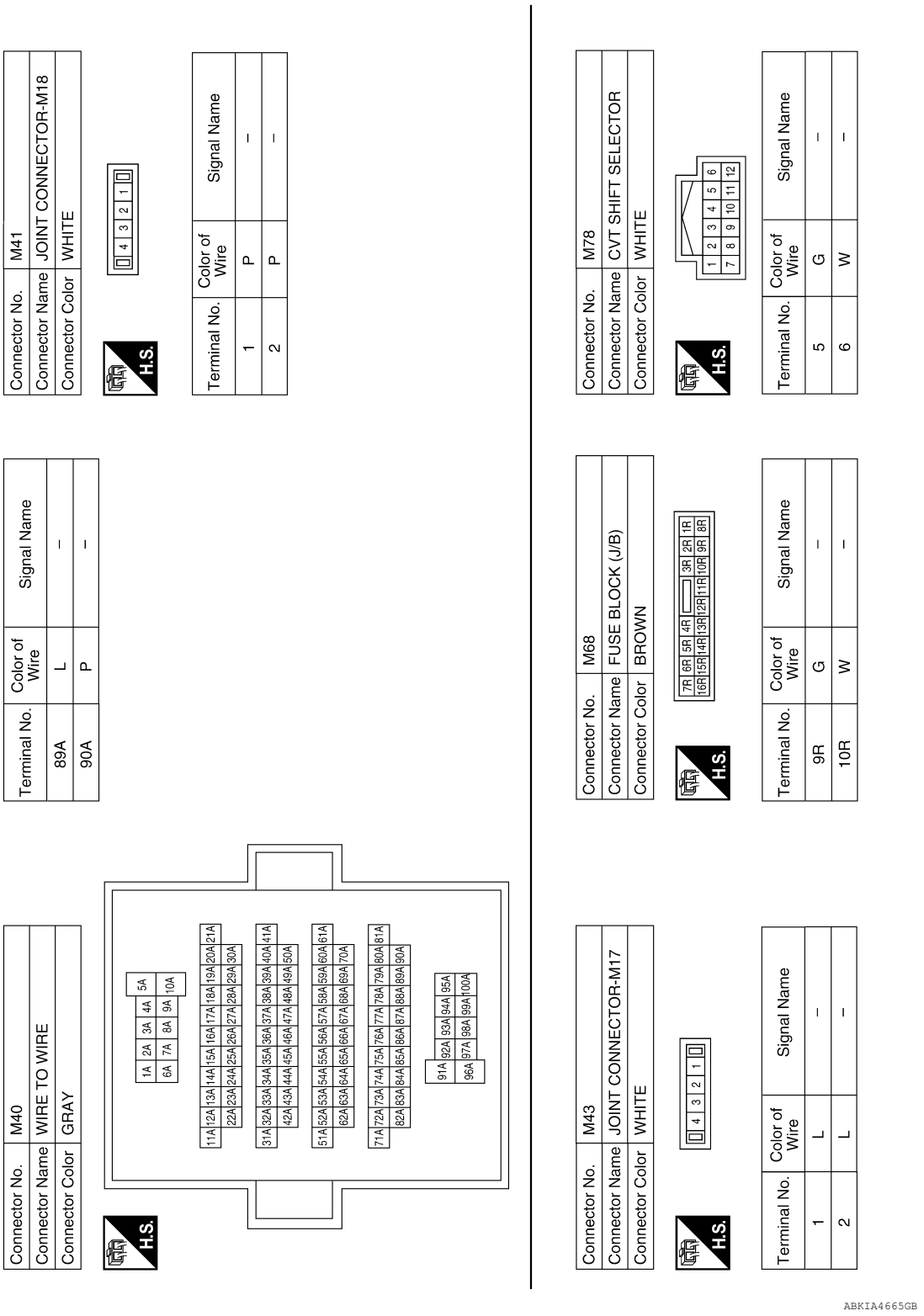

ABKIA4665GB

Connector No.	M84
Connector Name	WIRE TO WIRE
Connector Color	WHITE

H.S.

16	15	14	13	12	11	10	9	8	7	6	5	4	3	2	1
32	31	30	29	28	27	26	25	24	23	22	21	20	19	18	17

Terminal No.	Color of Wire	Signal Name
17	L	–
18	P	–

Connector No.	M81
Connector Name	BCM (BODY CONTROL MODULE)
Connector Color	WHITE

H.S.

137	136	135	134	133	132	131	130	129
143	142	141	140	139	138			

Terminal No.	Color of Wire	Signal Name
131	W	BAT BCM FUSE
134	B	GND 2
139	W	BAT POWER F/L
143	B	GND 1

Connector No.	E28
Connector Name	FUSE BLOCK (J/B)
Connector Color	WHITE

H.S.

4M	3M		2M	1M
10M	9M	8M	7M	6M	5M

Terminal No.	Color of Wire	Signal Name
5M	Y	–
7M	P	–

Connector No.	E14
Connector Name	JOINT CONNECTOR-E05
Connector Color	BLACK

H.S.

12	11	10	9	8	7	6	5	4	3	2	1

Terminal No.	Color of Wire	Signal Name
2	W	–
3	W	–

Connector No.	M80
Connector Name	BCM (BODY CONTROL MODULE)
Connector Color	BLACK

H.S.

116	115	114	113	112	111	110	109	108	107	106	105
128	127	126	125	124	123	122	121	120	119	118	117

Terminal No.	Color of Wire	Signal Name
111	P	ACC LED
126	P	IMMO START BUTTON ANT B
127	BG	IMMO START BUTTON ANT A

Connector No.	M181
Connector Name	JOINT CONNECTOR-M36
Connector Color	WHITE

H.S.

4	3	2	1

Terminal No.	Color of Wire	Signal Name
1	W	–
2	W	–

ABKIA4454GB

Connector No.	E38
Connector Name	STOP LAMP SWITCH
Connector Color	WHITE

H.S.

Terminal No.	Color of Wire	Signal Name
1	Y	–
2	P	–

Connector No.	E44
Connector Name	JOINT CONNECTOR-E01
Connector Color	WHITE

H.S.

Terminal No.	Color of Wire	Signal Name
12	P	–
13	P	–
19	Y	–
20	Y	–

Connector No.	E45
Connector Name	JOINT CONNECTOR-E12
Connector Color	BLUE

H.S.

Terminal No.	Color of Wire	Signal Name
1	L	–
4	L	–
7	P	–
10	P	–

Connector No.	E70
Connector Name	JOINT CONNECTOR-E14
Connector Color	BLACK

H.S.

Terminal No.	Color of Wire	Signal Name
1	P	–
2	P	–

Connector No.	E71
Connector Name	JOINT CONNECTOR-E15
Connector Color	BLACK

H.S.

Terminal No.	Color of Wire	Signal Name
1	L	–
2	L	–

ABKIA4666GB

Connector No.	E119
Connector Name	IPDM E/R (INTELLIGENT POWER DISTRIBUTION MODULE ENGINE ROOM)
Connector Color	WHITE

H.S.

19	20	21	22	23	24	25	26	27	28	29	30	31	32	33	34
35	36	37	38	39	40	41	42	43	44	45	46	47	48	49	50

Terminal No.	Color of Wire	Signal Name
28	P	CAN-L
29	L	CAN-H
31	BG	DETENT SW
33	R	START CONT
37	W	CLUTCH I/L SW
38	P	PUSH START SW
41	B	GND (SIGNAL)
43	L	IGN SIGNAL

Connector No.	E120
Connector Name	IPDM E/R (INTELLIGENT POWER DISTRIBUTION MODULE ENGINE ROOM)
Connector Color	WHITE

H.S.

3	4
5	6

Terminal No.	Color of Wire	Signal Name
3	G	F/L IGNSW

Connector No.	E121
Connector Name	IPDM E/R (INTELLIGENT POWER DISTRIBUTION MODULE ENGINE ROOM)
Connector Color	WHITE

H.S.

7	8	9	10	11
12	13	14	15	16	17	18

Terminal No.	Color of Wire	Signal Name
7	B	GND (POWER)

Connector No.	E152
Connector Name	WIRE TO WIRE
Connector Color	WHITE

H.S.

Connector No.	F17
Connector Name	IPDM E/R (INTELLIGENT POWER DISTRIBUTION MODULE ENGINE ROOM)
Connector Color	BLACK

H.S.

51

Terminal No.	Color of Wire	Signal Name
51	W	STARTER MOTOR

Terminal No.	Color of Wire	Signal Name
10G	P	–
35G	P	–
36G	L	–
44G	W	–
62G	P	–
63G	L	–
64G	R	–
67G	BG	–

ABKIA6353GB

Connector No.	F24
Connector Name	IPDM E/R (INTELLIGENT POWER DISTRIBUTION MODULE ENGINE ROOM)
Connector Color	WHITE

H.S.

Terminal No.	Color of Wire	Signal Name
63	L	INHIBIT SW
66	G	NPSW

Connector No.	F29
Connector Name	TRANSMISSION RANGE SWITCH
Connector Color	BLACK

H.S.

Terminal No.	Color of Wire	Signal Name
7	L	–
10	G	–

Connector No.	B11
Connector Name	JOINT CONNECTOR-B09
Connector Color	WHITE

H.S.

Terminal No.	Color of Wire	Signal Name
1	P	–
2	P	–

Connector No.	B12
Connector Name	JOINT CONNECTOR-B10
Connector Color	WHITE

H.S.

Terminal No.	Color of Wire	Signal Name
1	L	–
2	L	–

Connector No.	B16
Connector Name	JOINT CONNECTOR-B11
Connector Color	WHITE

H.S.

Terminal No.	Color of Wire	Signal Name
1	P	–
2	P	–

Connector No.	B17
Connector Name	JOINT CONNECTOR-B12
Connector Color	WHITE

H.S.

Terminal No.	Color of Wire	Signal Name
1	L	–
2	L	–

ABKIA4668GB

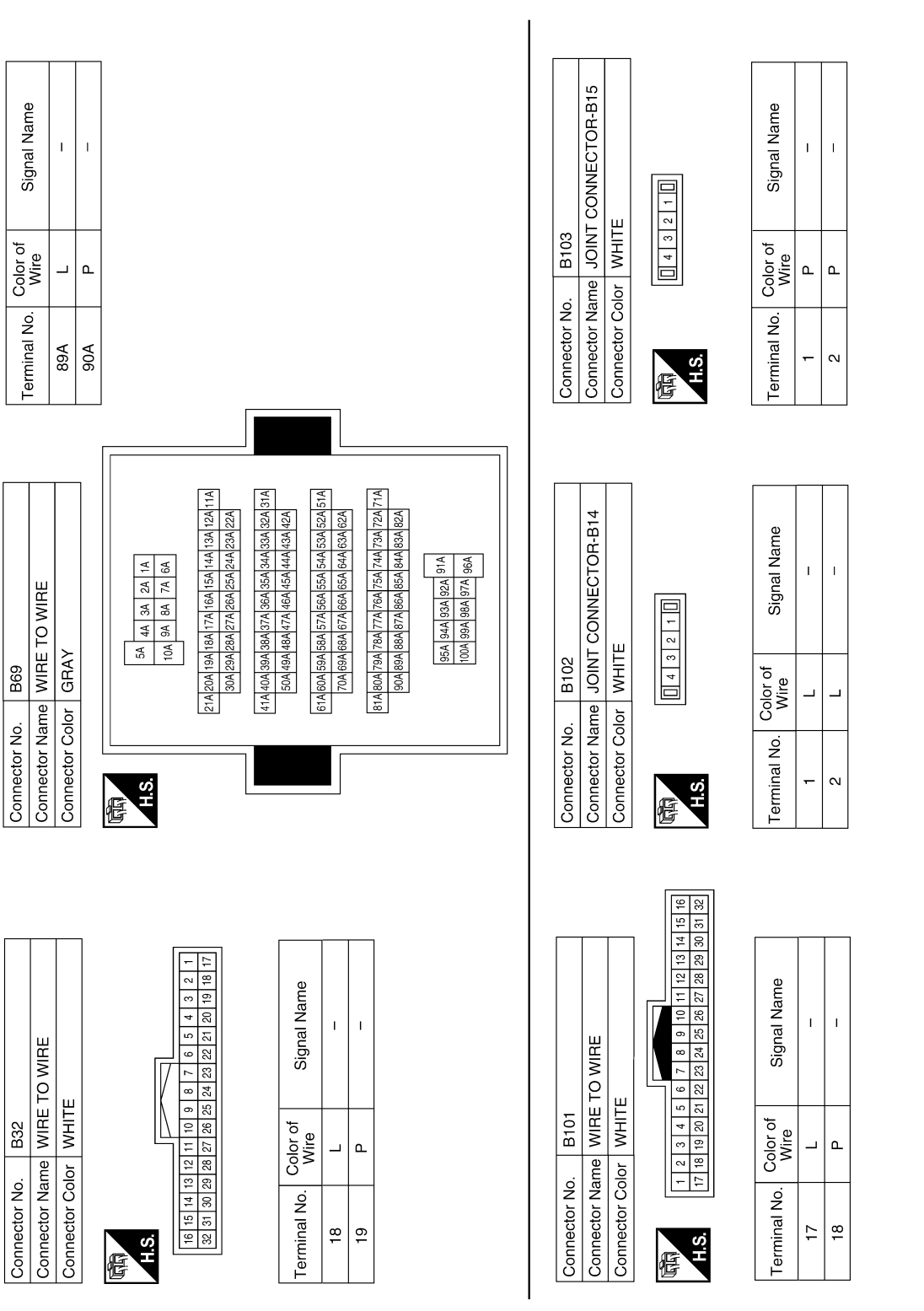
Connector No. B69
Connector Name WIRE TO WIRE
Connector Color GRAY
H.S.
5A 4A 3A 2A 1A
10A 9A 8A 7A 6A
21A 20A 19A 18A 17A 16A 15A 14A 13A 12A 11A
30A 29A 28A 27A 26A 25A 24A 23A 22A
41A 40A 39A 38A 37A 36A 35A 34A 33A 32A 31A
50A 49A 48A 47A 46A 45A 44A 43A 42A
61A 60A 59A 58A 57A 56A 55A 54A 53A 52A 51A
70A 69A 68A 67A 66A 65A 64A 63A 62A
81A 80A 79A 78A 77A 76A 75A 74A 73A 72A 71A
90A 89A 88A 87A 86A 85A 84A 83A 82A
95A 94A 93A 92A 91A
100A 99A 98A 97A 96A
Terminal No. Color of Wire Signal Name
89A L –
90A P –
Connector No. B32
Connector Name WIRE TO WIRE
Connector Color WHITE
H.S.
16 15 14 13 12 11 10 9 8 7 6 5 4 3 2 1
32 31 30 29 28 27 26 25 24 23 22 21 20 19 18 17
Terminal No. Color of Wire Signal Name
18 L –
19 P –
Connector No. B102
Connector Name JOINT CONNECTOR-B14
Connector Color WHITE
H.S.
4 3 2 1
Terminal No. Color of Wire Signal Name
1 L –
2 L –
Connector No. B103
Connector Name JOINT CONNECTOR-B15
Connector Color WHITE
H.S.
4 3 2 1
Terminal No. Color of Wire Signal Name
1 P –
2 P –
Connector No. B101
Connector Name WIRE TO WIRE
Connector Color WHITE
H.S.
1 2 3 4 5 6 7 8 9 10 11 12 13 14 15 16
17 18 19 20 21 22 23 24 25 26 27 28 29 30 31 32
Terminal No. Color of Wire Signal Name
17 L –
18 P –
ABKIA4669GB

Connector No.	B124
Connector Name	WIRE TO WIRE
Connector Color	WHITE

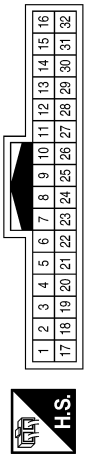

Terminal No.	Color of Wire	Signal Name
18	L	–
19	P	–

ABKIA4670GB

VEHICLE SECURITY SYSTEM

Wiring Diagram

INFOID:0000000011135274

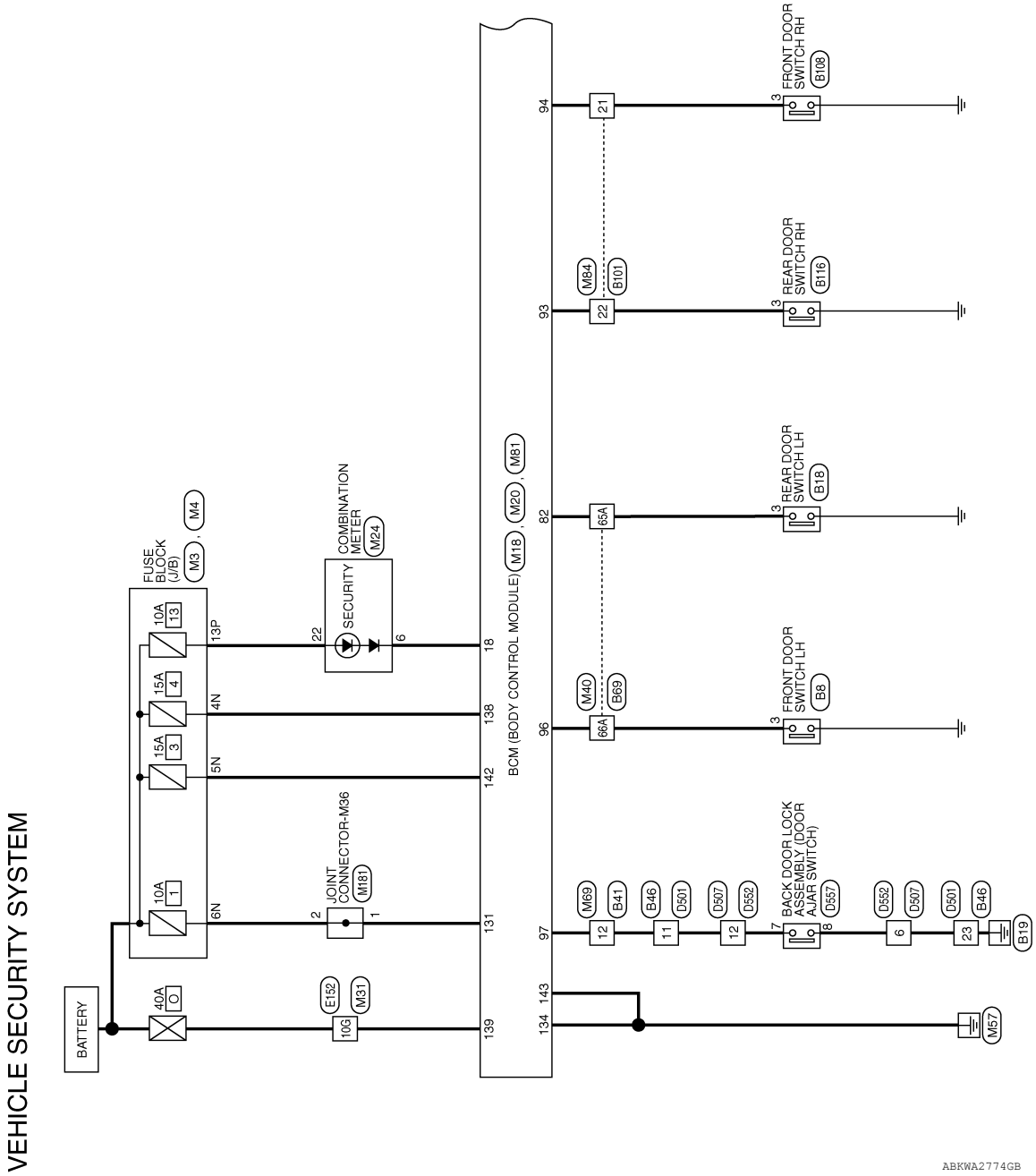

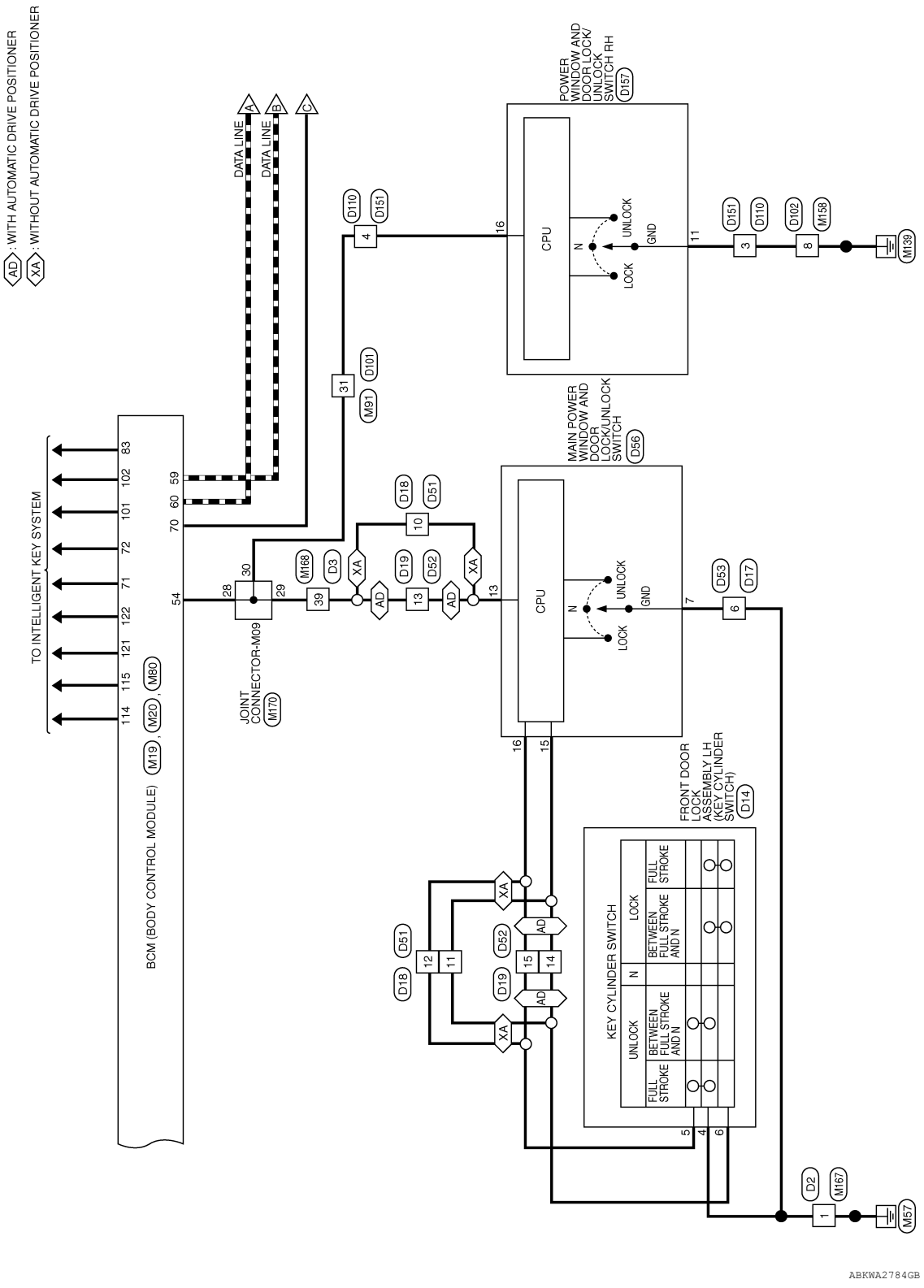
AD : WITH AUTOMATIC DRIVE POSITIONER
XA : WITHOUT AUTOMATIC DRIVE POSITIONER
DATA LINE
POWER WINDOW AND DOOR LOCK/ UNLOCK SWITCH RH (D157)
MAIN POWER WINDOW AND DOOR LOCK/UNLOCK SWITCH (D56)
CPU
UNLOCK
LOCK
GND
N
TO INTELLIGENT KEY SYSTEM
BCM (BODY CONTROL MODULE) (M19), (M20), (M80)
JOINT CONNECTOR-M09 (M170)
FRONT DOOR LOCK ASSEMBLY LH (KEY CYLINDER SWITCH) (D14)
KEY CYLINDER SWITCH
UNLOCK
LOCK
FULL STROKE
BETWEEN FULL STROKE AND N
ABKWA2784GB

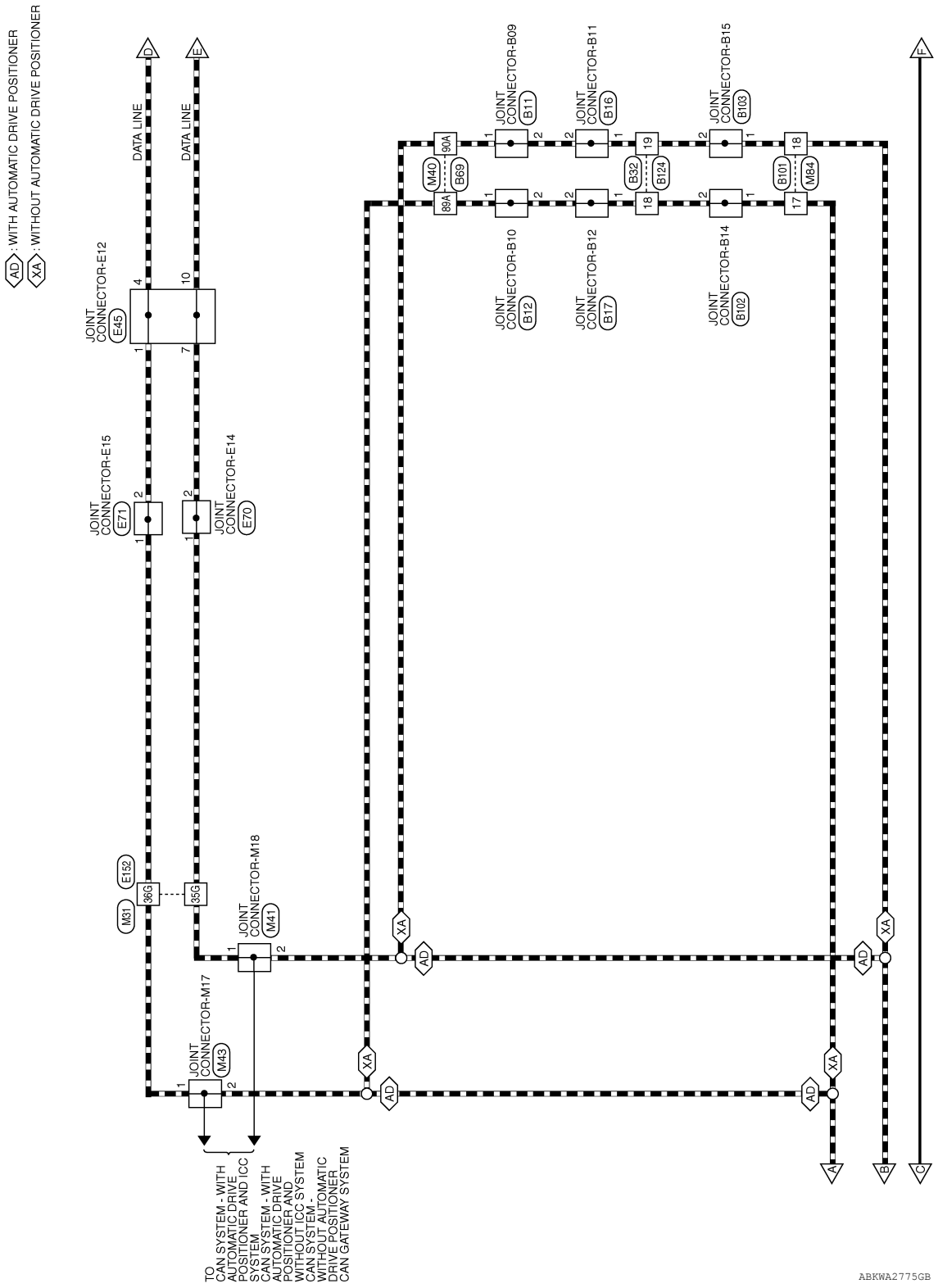
AD : WITH AUTOMATIC DRIVE POSITIONER
XA : WITHOUT AUTOMATIC DRIVE POSITIONER
DATA LINE
DATA LINE
JOINT CONNECTOR-E12
JOINT CONNECTOR-E45
JOINT CONNECTOR-E15
JOINT CONNECTOR-E71
JOINT CONNECTOR-E14
JOINT CONNECTOR-E70
JOINT CONNECTOR-M18
JOINT CONNECTOR-M41
JOINT CONNECTOR-M17
JOINT CONNECTOR-M43
JOINT CONNECTOR-B09
JOINT CONNECTOR-B11
JOINT CONNECTOR-B15
JOINT CONNECTOR-B10
JOINT CONNECTOR-B12
JOINT CONNECTOR-B14
JOINT CONNECTOR-B16
JOINT CONNECTOR-B103
JOINT CONNECTOR-B12
JOINT CONNECTOR-B17
JOINT CONNECTOR-B102
E152
M31
36G
35G
M40
B69
90A
89A
B32
B124
B101
M84
TO CAN SYSTEM - WITH AUTOMATIC DRIVE POSITIONER AND ICC SYSTEM
CAN SYSTEM - WITH AUTOMATIC DRIVE POSITIONER AND WITHOUT ICC SYSTEM
CAN SYSTEM - WITHOUT AUTOMATIC DRIVE POSITIONER
CAN GATEWAY SYSTEM
ABKWA2775GB

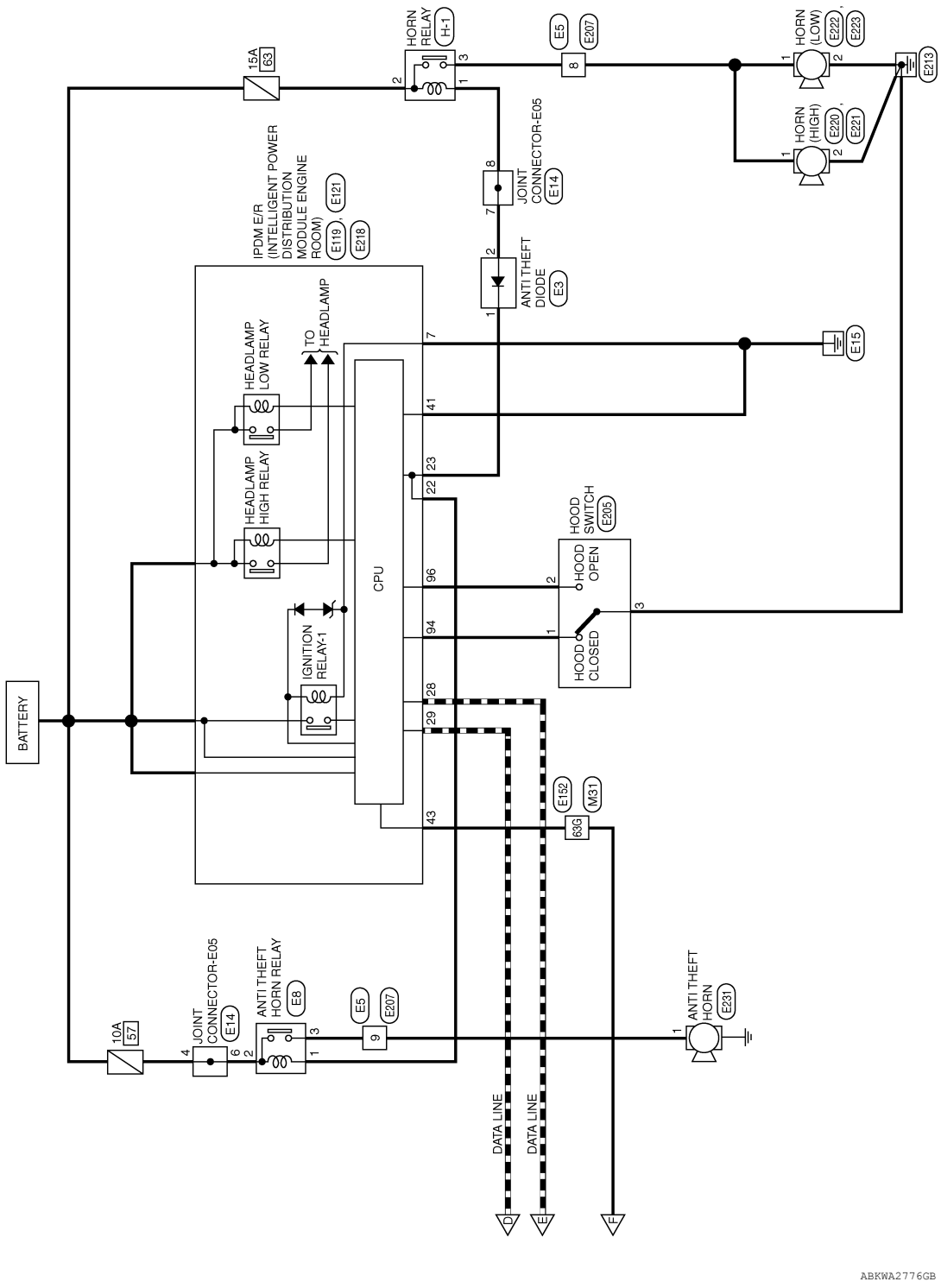
HORN RELAY H-1
15A 63
E5 E207
HORN (LOW) E222 E223
HORN (HIGH) E220 E221
E213
JOINT CONNECTOR-E05 E14
IPDM E/R (INTELLIGENT POWER DISTRIBUTION MODULE ENGINE ROOM) E121 E119 E218
ANTI THEFT DIODE E3
E15
HEADLAMP LOW RELAY
HEADLAMP HIGH RELAY
TO HEADLAMP
CPU
HOOD SWITCH E205
HOOD OPEN
HOOD CLOSED
IGNITION RELAY-1
BATTERY
E152 M31 63G
10A 57
JOINT CONNECTOR-E05 E14
ANTI THEFT HORN RELAY E8
E5 E207
ANTI THEFT HORN E231
DATA LINE
DATA LINE
D
E
F
ABKWA2776GB

VEHICLE SECURITY SYSTEM CONNECTORS

Connector No.	M3
Connector Name	FUSE BLOCK (J/B)
Connector Color	WHITE

H.S.

3N		2N	1N
8N	7N	6N	5N	4N

Terminal No.	Color of Wire	Signal Name
4N	V	–
5N	Y	–
6N	W	–

Connector No.	M4
Connector Name	FUSE BLOCK (J/B)
Connector Color	WHITE

H.S.

7P	6P	5P	4P		3P	2P	1P
16P	15P	14P	13P	12P	11P	10P	9P	8P

Terminal No.	Color of Wire	Signal Name
13P	W	–

Connector No.	M18
Connector Name	BCM (BODY CONTROL MODULE)
Connector Color	GREEN

H.S.

20	19	18	17	16	15	14	13	12	11	10	9	8	7	6	5	4	3	2	1
40	39	38	37	36	35	34	33	32	31	30	29	28	27	26	25	24	23	22	21

Terminal No.	Color of Wire	Signal Name
18	V	SECURITY INDICATOR

Connector No.	M19
Connector Name	BCM (BODY CONTROL MODULE)
Connector Color	BLACK

H.S.

60	59	58	57	56	55	54	53	52	51	50	49	48	47	46	45	44	43	42	41
80	79	78	77	76	75	74	73	72	71	70	69	68	67	66	65	64	63	62	61

Terminal No.	Color of Wire	Signal Name
54	W	PW LIN/COM
59	P	CAN-L
60	L	CAN-H
70	P	IGN USM OUT 1
71	R	DR REQUEST SW
72	G	AS REQUEST SW

Connector No.	M20
Connector Name	BCM (BODY CONTROL MODULE)
Connector Color	GRAY

H.S.

92	91	90	89		88	87	86	85	84	83	82	81
104	103	102	101	100	99	98	97	96	95	94	93	

Terminal No.	Color of Wire	Signal Name
82	W	RL DOOR SW
83	BG	BACK DOOR REQUEST SW
93	R	RR DOOR SW
94	G	AS DOOR SW
96	BG	DR DOOR SW
97	W	BACK DOOR SW
101	R	REAR BUMPER ANT B
102	G	REAR BUMPER ANT A

Connector No.	M24
Connector Name	COMBINATION METER
Connector Color	WHITE

H.S.

20	19	18	17	16	15	14	13	12	11	10	9	8	7	6	5	4	3	2	1
40	39	38	37	36	35	34	33	32	31	30	29	28	27	26	25	24	23	22	21

Terminal No.	Color of Wire	Signal Name
6	V	SECURITY
22	W	BAT

ABKIA6363GB

Connector No.	M31
Connector Name	WIRE TO WIRE
Connector Color	WHITE

H.S.

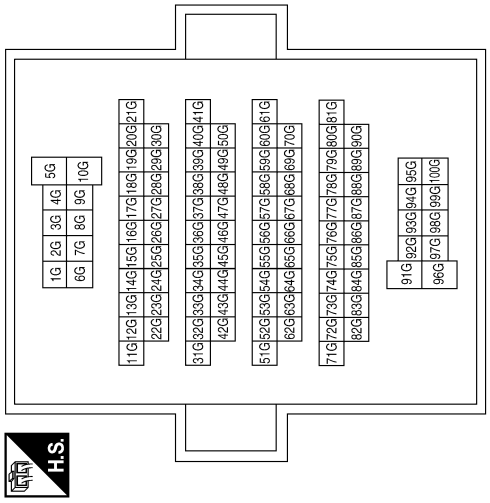

Terminal No.	Color of Wire	Signal Name
10G	W	–
35G	P	–
36G	L	–
63G	P	–

Connector No.	M40
Connector Name	WIRE TO WIRE
Connector Color	GRAY

H.S.

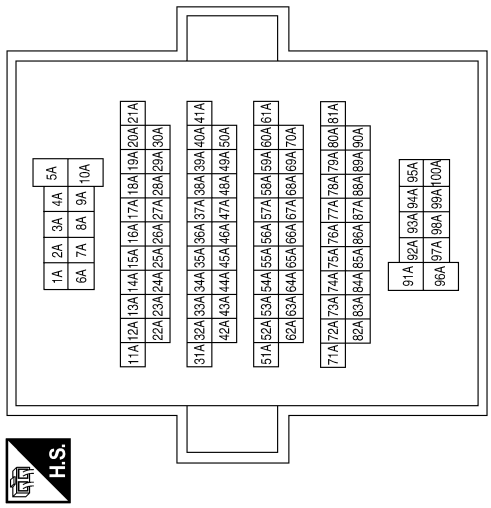

Terminal No.	Color of Wire	Signal Name
65A	W	–
66A	BG	–
89A	L	–
90A	P	–

Connector No.	M41
Connector Name	JOINT CONNECTOR-M18
Connector Color	WHITE

H.S.

Terminal No.	Color of Wire	Signal Name
1	P	–
2	P	–

ABKIA4672GB

Connector No.	M43
Connector Name	JOINT CONNECTOR-M17
Connector Color	WHITE

H.S.

Terminal No.	Color of Wire	Signal Name
1	L	–
2	L	–

Connector No.	M69
Connector Name	WIRE TO WIRE
Connector Color	WHITE

H.S.

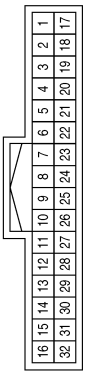

Terminal No.	Color of Wire	Signal Name
12	W	–

Connector No.	M80
Connector Name	BCM (BODY CONTROL MODULE)
Connector Color	BLACK

H.S.

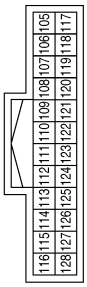

Terminal No.	Color of Wire	Signal Name
114	W	AS DOOR ANT A
115	BG	AS DOOR ANT B
121	G	DR DOOR ANT B
122	P	DR DOOR ANT A

Connector No.	M81
Connector Name	BCM (BODY CONTROL MODULE)
Connector Color	WHITE

H.S.

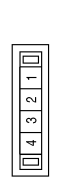

Terminal No.	Color of Wire	Signal Name
131	W	BAT BCM FUSE
134	B	GND 2
138	V	BAT REAR DOOR
139	W	BAT POWER F/L
142	Y	BAT FRONT DOOR
143	B	GND 1

Connector No.	M84
Connector Name	WIRE TO WIRE
Connector Color	WHITE

H.S.

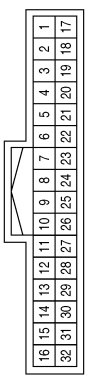

Terminal No.	Color of Wire	Signal Name
17	L	–
18	P	–
21	G	–
22	R	–

Connector No.	M91
Connector Name	WIRE TO WIRE
Connector Color	WHITE

H.S.

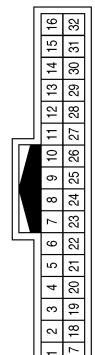

Terminal No.	Color of Wire	Signal Name
31	W	–

ABKIA6364GB

Connector No.	M158
Connector Name	WIRE TO WIRE
Connector Color	WHITE

H.S.

1	2	3	4
5	6	7	8	9	10
---	---	---	---	---	---

Terminal No.	Color of Wire	Signal Name
8	GR	–

Connector No.	M167
Connector Name	WIRE TO WIRE
Connector Color	WHITE

H.S.

1	2	3	4	5	6	7
8	9	10	11	12	13	14	15	16
---	---	---	---	---	---	---	---	---

Terminal No.	Color of Wire	Signal Name
1	B	–

Connector No.	M168
Connector Name	WIRE TO WIRE
Connector Color	WHITE

H.S.

1	2	3	4	5	6	7	8	9	10	11	12	13	14	15	16	17	18	19	20
21	22	23	24	25	26	27	28	29	30	31	32	33	34	35	36	37	38	39	40

Terminal No.	Color of Wire	Signal Name
39	W	–

Connector No.	M170
Connector Name	JOINT CONNECTOR-M09
Connector Color	WHITE

H.S.

11	10	9	8	7	6	5	4	3	2	1
22	21	20	19	18	17	16	15	14	13	12
33	32	31	30	29	28	27	26	25	24	23

Terminal No.	Color of Wire	Signal Name
28	W	–
29	W	–
30	W	–

Connector No.	M181
Connector Name	JOINT CONNECTOR-M36
Connector Color	WHITE

H.S.

4	3	2	1

Terminal No.	Color of Wire	Signal Name
1	W	–
2	W	–

Connector No.	E3
Connector Name	ANTI THEFT DIODE
Connector Color	BLACK

H.S.

1	2

Terminal No.	Color of Wire	Signal Name
1	LG	–
2	Y	–

ABKIA4674GB

Connector No.	E5
Connector Name	WIRE TO WIRE
Connector Color	WHITE

H.S.

1	2	3		4	5	6	7
8	9	10	11	12	13	14	15	16

Terminal No.	Color of Wire	Signal Name
8	G	–
9	L	–

Connector No.	E8
Connector Name	ANTI THEFT HORN RELAY
Connector Color	WHITE

H.S.

2
3	1

Terminal No.	Color of Wire	Signal Name
1	W	–
2	LG	–
3	L	–

Connector No.	E14
Connector Name	JOINT CONNECTOR-E05
Connector Color	BLACK

H.S.

12	11	10	9	8	7	6	5	4	3	2	1

Terminal No.	Color of Wire	Signal Name
4	LG	–
6	LG	–
7	Y	–
8	Y	–

Connector No.	E45
Connector Name	JOINT CONNECTOR-E12
Connector Color	BLUE

H.S.

12	11	10	9	8	7	6	5	4	3	2	1

Terminal No.	Color of Wire	Signal Name
1	L	–
4	L	–
7	P	–
10	P	–

Connector No.	E70
Connector Name	JOINT CONNECTOR-E14
Connector Color	BLACK

H.S.

6	5	4	3	2	1

Terminal No.	Color of Wire	Signal Name
1	P	–
2	P	–

Connector No.	E71
Connector Name	JOINT CONNECTOR-E15
Connector Color	BLACK

H.S.

6	5	4	3	2	1

Terminal No.	Color of Wire	Signal Name
1	L	–
2	L	–

ABKIA3548GB

Connector No.	E119
Connector Name	IPDM E/R (INTELLIGENT POWER DISTRIBUTION MODULE ENGINE ROOM)
Connector Color	WHITE

H.S.

19	20	21	22	23	24	25	26	27	28	29	30	31	32	33	34
35	36	37	38	39	40	41	42	43	44	45	46	47	48	49	50

Terminal No.	Color of Wire	Signal Name
22	W	HORN RLY
23	LG	HORN SW
28	P	CAN-L
29	L	CAN-H
41	B	GND (SIGNAL)
43	L	IGN SIGNAL

Connector No.	E121
Connector Name	IPDM E/R (INTELLIGENT POWER DISTRIBUTION MODULE ENGINE ROOM)
Connector Color	WHITE

H.S.

7	8	9	10	11
12	13	14	15	16	17	18

Terminal No.	Color of Wire	Signal Name
7	B	GND (POWER)

Connector No.	E152
Connector Name	WIRE TO WIRE
Connector Color	WHITE

H.S.

Terminal No.	Color of Wire	Signal Name
10G	P	–
35G	P	–
36G	L	–
63G	L	

Connector No.	E205
Connector Name	HOOD SWITCH
Connector Color	BROWN

H.S.

1	2	3

Terminal No.	Color of Wire	Signal Name
1	LG	–
2	R	–
3	B	–

ABKIA4675GB

Connector No.	E207
Connector Name	WIRE TO WIRE
Connector Color	WHITE

H.S.

7	6	5	4		3	2	1
16	15	14	13	12	11	10	9	8

Terminal No.	Color of Wire	Signal Name
8	G	–
9	R	–

Connector No.	E218
Connector Name	IPDM E/R (INTELLIGENT POWER DISTRIBUTION MODULE ENGINE ROOM)
Connector Color	WHITE

H.S.

82	83	84	85	86	87	88	89
90	91	92	93	94	95	96	97

Terminal No.	Color of Wire	Signal Name
94	LG	HOODSW 2
96	R	HOODSW

Connector No.	E220
Connector Name	HORN (HIGH)
Connector Color	BLACK

H.S.

1

Terminal No.	Color of Wire	Signal Name
1	G	–

Connector No.	E221
Connector Name	HORN (HIGH)
Connector Color	BLACK

H.S.

2

Terminal No.	Color of Wire	Signal Name
2	B	–

Connector No.	E222
Connector Name	HORN (LOW)
Connector Color	BLACK

H.S.

1

Terminal No.	Color of Wire	Signal Name
1	G	–

Connector No.	E223
Connector Name	HORN (LOW)
Connector Color	BLACK

H.S.

2

Terminal No.	Color of Wire	Signal Name
2	B	–

ABKIA3550GB

Connector No.	E231
Connector Name	ANTI THEFT HORN
Connector Color	BLACK

H.S.

Terminal No.	Color of Wire	Signal Name
1	R	–

Connector No.	B8
Connector Name	FRONT DOOR SWITCH LH
Connector Color	WHITE

H.S.

Terminal No.	Color of Wire	Signal Name
3	L	–

Connector No.	B11
Connector Name	JOINT CONNECTOR-B09
Connector Color	WHITE

H.S.

Terminal No.	Color of Wire	Signal Name
1	P	–
2	P	–

Connector No.	B12
Connector Name	JOINT CONNECTOR-B10
Connector Color	WHITE

H.S.

Terminal No.	Color of Wire	Signal Name
1	L	–
2	L	–

Connector No.	B16
Connector Name	JOINT CONNECTOR-B11
Connector Color	WHITE

H.S.

Terminal No.	Color of Wire	Signal Name
1	P	–
2	P	–

Connector No.	B17
Connector Name	JOINT CONNECTOR-B12
Connector Color	WHITE

H.S.

Terminal No.	Color of Wire	Signal Name
1	L	–
2	L	–

ABKIA3551GB

Connector No.	B18
Connector Name	REAR DOOR SWITCH LH
Connector Color	WHITE

Terminal No.	Color of Wire	Signal Name
3	SB	–

Connector No.	B32
Connector Name	WIRE TO WIRE
Connector Color	WHITE

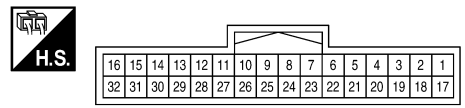

Terminal No.	Color of Wire	Signal Name
18	L	–
19	P	–

Connector No.	B41
Connector Name	WIRE TO WIRE
Connector Color	WHITE

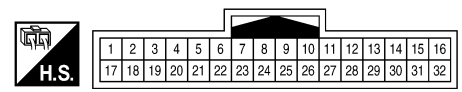

Terminal No.	Color of Wire	Signal Name
12	G	–

Connector No.	B46
Connector Name	WIRE TO WIRE
Connector Color	WHITE

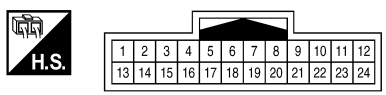

Terminal No.	Color of Wire	Signal Name
11	G	–
23	GR	–

Connector No.	B69
Connector Name	WIRE TO WIRE
Connector Color	GRAY

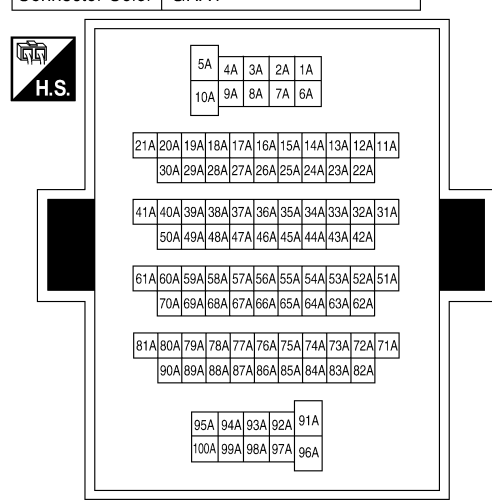

Terminal No.	Color of Wire	Signal Name
65A	SB	–
66A	L	–
89A	L	–
90A	P	–

ABKIA4676GB

Connector No.	B101
Connector Name	WIRE TO WIRE
Connector Color	WHITE

H.S.

1	2	3	4	5	6	7	8	9	10	11	12	13	14	15	16
17	18	19	20	21	22	23	24	25	26	27	28	29	30	31	32

Terminal No.	Color of Wire	Signal Name
17	L	–
18	P	–
21	LG	–
22	LG	–

Connector No.	B102
Connector Name	JOINT CONNECTOR-B14
Connector Color	WHITE

H.S.

4	3	2	1

Terminal No.	Color of Wire	Signal Name
1	L	–
2	L	–

Connector No.	B103
Connector Name	JOINT CONNECTOR-B15
Connector Color	WHITE

H.S.

4	3	2	1

Terminal No.	Color of Wire	Signal Name
1	P	–
2	P	–

Connector No.	B108
Connector Name	FRONT DOOR SWITCH RH
Connector Color	WHITE

H.S.

1	2	3	4

Terminal No.	Color of Wire	Signal Name
3	LG	–

Connector No.	B116
Connector Name	REAR DOOR SWITCH RH
Connector Color	WHITE

H.S.

1	2	3	4

Terminal No.	Color of Wire	Signal Name
3	LG	–

Connector No.	B124
Connector Name	WIRE TO WIRE
Connector Color	WHITE

H.S.

1	2	3	4	5	6	7	8	9	10	11	12	13	14	15	16
17	18	19	20	21	22	23	24	25	26	27	28	29	30	31	32

Terminal No.	Color of Wire	Signal Name
18	L	–
19	P	–

ABKIA4677GB

Connector No.	D14
Connector Name	FRONT DOOR LOCK ASSEMBLY LH
Connector Color	GRAY

H.S.

1	2	3	4	5	6

Terminal No.	Color of Wire	Signal Name
4	B	–
5	SB	–
6	BR	–

Connector No.	D3
Connector Name	WIRE TO WIRE
Connector Color	WHITE

H.S.

20	19	18	17	16	15	14	13	12	11	10	9	8	7	6	5	4	3	2	1
40	39	38	37	36	35	34	33	32	31	30	29	28	27	26	25	24	23	22	21

Terminal No.	Color of Wire	Signal Name
39	Y	–

Connector No.	D2
Connector Name	WIRE TO WIRE
Connector Color	WHITE

H.S.

7	6	5	4		3	2	1
16	15	14	13	12	11	10	9	8

Terminal No.	Color of Wire	Signal Name
1	B	–

Connector No.	D19
Connector Name	WIRE TO WIRE
Connector Color	WHITE

H.S.

12	11	10	9	8	7	6	5	4	3	2	1
24	23	22	21	20	19	18	17	16	15	14	13

Terminal No.	Color of Wire	Signal Name
13	Y	–
14	BR	–
15	SB	–

Connector No.	D18
Connector Name	WIRE TO WIRE
Connector Color	WHITE

H.S.

8	7	6	5	4	3	2	1	
16	15	14	13	12	11	10	9	

Terminal No.	Color of Wire	Signal Name
10	Y	–
11	BR	–
12	SB	–

Connector No.	D17
Connector Name	WIRE TO WIRE
Connector Color	WHITE

H.S.

3		2	1
8	7	6	5	4

Terminal No.	Color of Wire	Signal Name
6	B	–

ABKIA4678GB

Connector No.	D51
Connector Name	WIRE TO WIRE
Connector Color	WHITE

H.S.

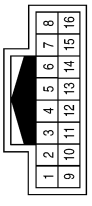

Terminal No.	Color of Wire	Signal Name
10	Y	–
11	BR	–
12	SB	–

Connector No.	D52
Connector Name	WIRE TO WIRE
Connector Color	WHITE

H.S.

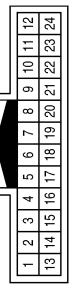

Terminal No.	Color of Wire	Signal Name
13	Y	–
14	W	–
15	SB	–

Connector No.	D53
Connector Name	WIRE TO WIRE
Connector Color	WHITE

H.S.

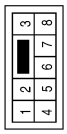

Terminal No.	Color of Wire	Signal Name
6	B	–

Connector No.	D56
Connector Name	MAIN POWER WINDOW AND DOOR LOCK/UNLOCK SWITCH
Connector Color	WHITE

H.S.

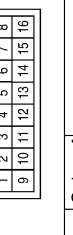

Terminal No.	Color of Wire	Signal Name
7	B	GND
13	Y	COM
15	BR	LOCK SW (WITHOUT AUTOMATIC DRIVE POSITIONER)
15	W	LOCK SW (WITH AUTOMATIC DRIVE POSITIONER)
16	SB	UNLOCK SW

Connector No.	D101
Connector Name	WIRE TO WIRE
Connector Color	WHITE

H.S.

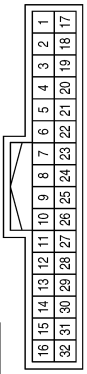

Terminal No.	Color of Wire	Signal Name
31	BR	–

Connector No.	D102
Connector Name	WIRE TO WIRE
Connector Color	WHITE

H.S.

Terminal No.	Color of Wire	Signal Name
8	B	–

ABKIA4679GB

Connector No.	D157
Connector Name	POWER WINDOW AND DOOR LOCK/UNLOCK SWITCH RH
Connector Color	WHITE

H.S.

1	2	3	4		5	6	7
8	9	10	11	12	13	14	15	16

Terminal No.	Color of Wire	Signal Name
11	B	GND
16	BR	COM

Connector No.	D151
Connector Name	WIRE TO WIRE
Connector Color	WHITE

H.S.

1	2		3	4
5	6	7	8	9	10

Terminal No.	Color of Wire	Signal Name
3	B	–
4	BR	–

Connector No.	D110
Connector Name	WIRE TO WIRE
Connector Color	WHITE

H.S.

4	3		2	1
10	9	8	7	6	5

Terminal No.	Color of Wire	Signal Name
3	B	–
4	BR	–

Connector No.	D552
Connector Name	WIRE TO WIRE
Connector Color	WHITE

H.S.

1	2	3	4	5	6	7	8
9	10	11	12	13	14	15	16

Terminal No.	Color of Wire	Signal Name
6	B	–
12	G	–

Connector No.	D507
Connector Name	WIRE TO WIRE
Connector Color	WHITE

H.S.

8	7	6	5	4	3	2	1
16	15	14	13	12	11	10	9

Terminal No.	Color of Wire	Signal Name
6	Y	–
12	P	–

Connector No.	D501
Connector Name	WIRE TO WIRE
Connector Color	WHITE

H.S.

12	11	10	9	8	7	6	5	4	3	2	1
24	23	22	21	20	19	18	17	16	15	14	13

Terminal No.	Color of Wire	Signal Name
11	P	–
23	Y	–

ABKIA4680GB

Connector No.	H-1
Connector Name	FUSE AND FUSIBLE LINK BOX (HORN RELAY)
Connector Color	–

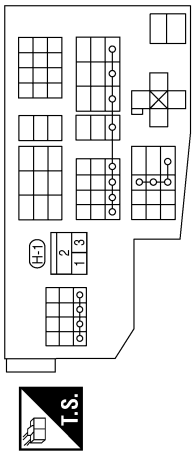

Terminal No.	Color of Wire	Signal Name
1	Y	–
2	W	–
3	G	–

Connector No.	D557
Connector Name	BACK DOOR LOCK ASSEMBLY
Connector Color	WHITE

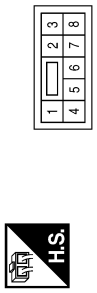

Terminal No.	Color of Wire	Signal Name
7	G	–
8	B	–

ABKIA4699GB

BASIC INSPECTION

DIAGNOSIS AND REPAIR WORK FLOW

Work Flow

INFOID:0000000011135275

OVERALL SEQUENCE

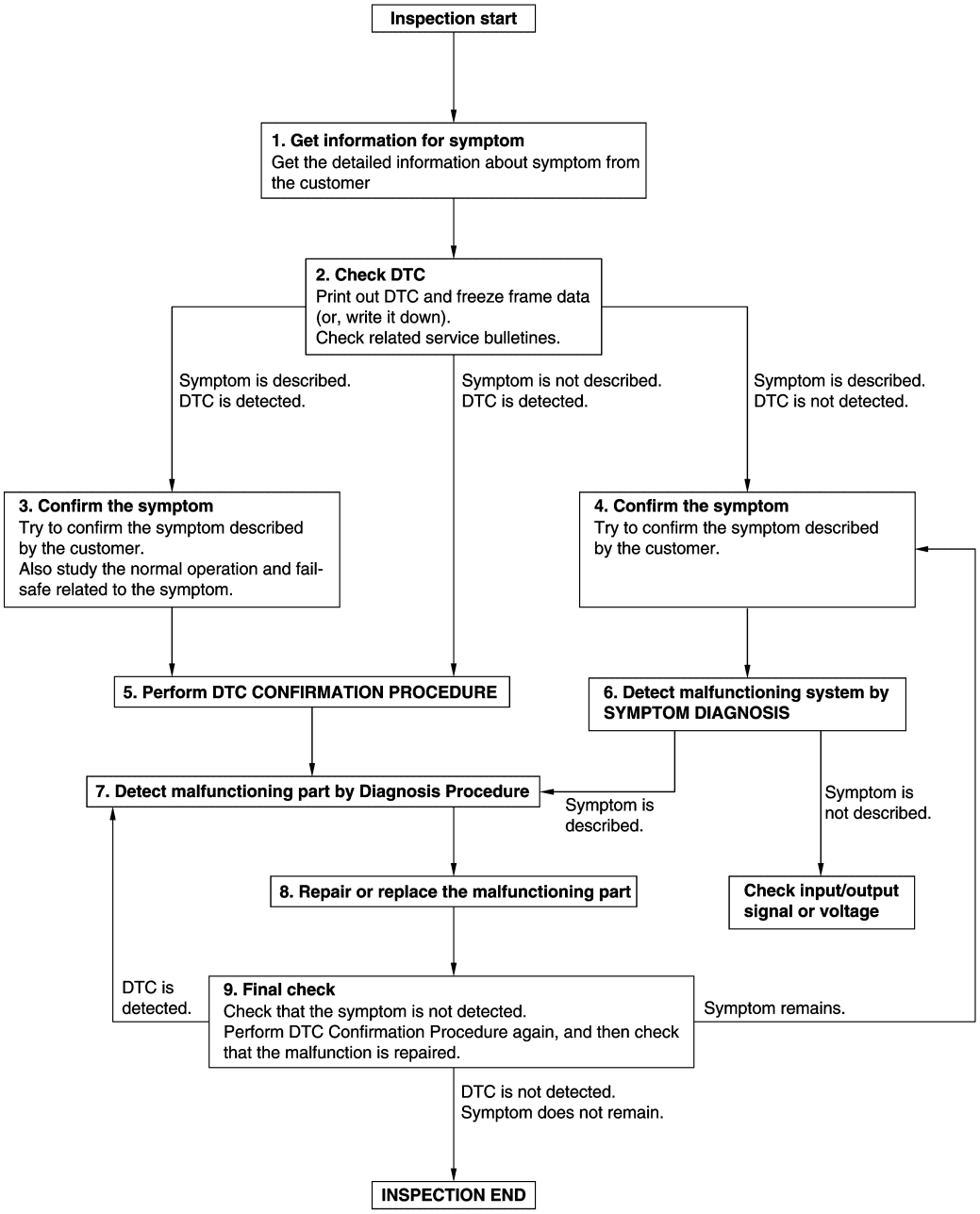

JMKIA8652GB

DETAILED FLOW

1.GET INFORMATION FOR SYMPTOM

1. Get detailed information from the customer about the symptom (the condition and the environment when the incident/malfunction occurs).
2. Check operation condition of the function that is malfunctioning.

>> GO TO 2.

2.CHECK DTC

1. Check DTC.
2. Perform the following procedure if DTC is detected.

- Record DTC and freeze frame data (Print them out using CONSULT.)
- Erase DTC.
- Study the relationship between the cause detected by DTC and the symptom described by the customer.

3. Check related service bulletins for information.

Are any symptoms described and any DTC detected?

Symptom is described, DTC is detected>>GO TO 3.
Symptom is described, DTC is not detected>>GO TO 4.
Symptom is not described, DTC is detected>>GO TO 5.

3.CONFIRM THE SYMPTOM

Try to confirm the symptom described by the customer.
Also study the normal operation and fail-safe related to the symptom.
Verify relation between the symptom and the condition when the symptom is detected.

>> GO TO 5.

4.CONFIRM THE SYMPTOM

Try to confirm the symptom described by the customer.
Verify relation between the symptom and the condition when the symptom is detected.

>> GO TO 6.

5.PERFORM DTC CONFIRMATION PROCEDURE

Perform DTC CONFIRMATION PROCEDURE for the detected DTC, and then check that DTC is detected again. At this time, always connect CONSULT to the vehicle, and check self diagnostic results in real time.
If two or more DTCs are detected, refer to BCS-49, "DTC Inspection Priority Chart" and determine trouble diagnosis order.

NOTE:

- Freeze frame data is useful if the DTC is not detected.
- Perform Component Function Check if DTC CONFIRMATION PROCEDURE is not included on Service Manual. This simplified check procedure is an effective alternative though DTC cannot be detected during this check.
  If the result of Component Function Check is NG, it is the same as the detection of DTC by DTC CONFIRMATION PROCEDURE.

Is DTC detected?

YES >> GO TO 7.
NO >> Check according to GI-50, "Intermittent Incident".

6.DETECT MALFUNCTIONING SYSTEM BY SYMPTOM DIAGNOSIS

Detect malfunctioning system according to SYMPTOM DIAGNOSIS based on the confirmed symptom in step 4, and determine the trouble diagnosis order based on possible causes and symptom.

Is the symptom described?

YES >> GO TO 7.
NO >> Monitor input data from related sensors or check voltage of related module terminals using CONSULT.

7.DETECT MALFUNCTIONING PART BY DIAGNOSIS PROCEDURE

Inspect according to Diagnosis Procedure of the system.

Is malfunctioning part detected?

YES >> GO TO 8.
NO >> Check according to GI-50, "Intermittent Incident".

8. REPAIR OR REPLACE THE MALFUNCTIONING PART

1. Repair or replace the malfunctioning part.
2. Reconnect parts or connectors disconnected during Diagnosis Procedure again after repair and replacement.
3. Check DTC. If DTC is detected, erase it.

>> GO TO 9.

9. FINAL CHECK

When DTC is detected in step 2, perform DTC CONFIRMATION PROCEDURE again, and then check that the malfunction is repaired securely.
When symptom is described by the customer, refer to confirmed symptom in step 3 or 4, and check that the symptom is not detected.

Is DTC detected and does symptom remain?

YES-1 >> DTC is detected: GO TO 7.
YES-2 >> Symptom remains: GO TO 4.
NO >> Before returning the vehicle to the customer, always erase DTC.

ADDITIONAL SERVICE WHEN REPLACING CONTROL UNIT

ECM

ECM : Description

INFOID:0000000011135276

Performing the following procedure can automatically activate recommunication of ECM and BCM, but only when the ECM is replaced with a new one*.
*: New one means an ECM that has never been energized on-board.
(In this step, initialization procedure by CONSULT is not necessary)
NOTE:
- **If multiple keys are attached to the key holder, separate them before beginning work.**
- **Distinguish keys with unregistered key IDs from those with registered IDs.**

ECM : Work Procedure

INFOID:0000000011135277

1.PERFORM ECM RECOMMUNICATING FUNCTION

1. Install ECM.
2. Contact back side of registered Intelligent Key* to push-button ignition switch, then turn ignition switch to ON.
   *: To perform this step, use the key that is used before performing ECM replacement.
3. Maintain ignition switch in the ON position for at least 5 seconds.
4. Turn ignition switch to OFF.
5. Check that the engine starts.

>> GO TO 2.

2.PERFORM ADDITIONAL SERVICE WHEN REPLACING ECM

Perform EC-164, "Work Procedure" (except for Mexico) or EC-685, "Work Procedure" (for Mexico).

>> End.

BCM

BCM : Description

INFOID:0000000011135278

BEFORE REPLACEMENT
When replacing BCM, save or print current vehicle specification with CONSULT configuration before replacement.
NOTE:
If “READ CONFIGURATION” can not be used, use the “WRITE CONFIGURATION - Manual selection” after replacing BCM.

AFTER REPLACEMENT
CAUTION:
When replacing BCM, always perform “WRITE CONFIGURATION” with CONSULT. Not doing so will cause the BCM control function to not operate normally.
- **Complete the procedure of “WRITE CONFIGURATION” in order.**
- **Configuration is different for each vehicle model. Confirm configuration of each vehicle model.**
- **If you set incorrect “WRITE CONFIGURATION”, incidents might occur.**

NOTE:
When replacing BCM, perform the system initialization (NATS).

BCM : Work Procedure

INFOID:0000000011135279

1.SAVING VEHICLE SPECIFICATION

CONSULT Configuration
Perform “READ CONFIGURATION” to save or print current vehicle specification. Refer to BCS-64, "CONFIGURATION (BCM) : Description".
NOTE:

If “READ CONFIGURATION” can not be used, use the “WRITE CONFIGURATION - Manual selection” after replacing BCM.

>> GO TO 2.

2.REPLACE BCM

Replace BCM. Refer to BCS-79, "Removal and Installation".

>> GO TO 3.

3.WRITING VEHICLE SPECIFICATION

CONSULT Configuration
Perform “WRITE CONFIGURATION - Config file” or “WRITE CONFIGURATION - Manual selection” to write vehicle specification. Refer to BCS-64, "CONFIGURATION (BCM) : Work Procedure".

>> GO TO 4.

4.INITIALIZE BCM (NATS)

Perform BCM initialization. (NATS)

>> Inspection End.

DTC/CIRCUIT DIAGNOSIS

P1610 LOCK MODE

Description

INFOID:0000000011135280

ECM forcibly switches to the mode that inhibits engine start, when engine start operation is performed 5 times or more while communication between ECM and BCM is not normal.

DTC Logic

INFOID:0000000011135281

DTC DETECTION LOGIC

NOTE:

- If DTC B1610 is displayed with DTC U1000, first perform the trouble diagnosis for DTC U1000. Refer to BCS-67, "DTC Logic".
- If DTC B1610 is displayed with DTC U1010, first perform the trouble diagnosis for DTC U1010. Refer to BCS-68, "DTC Logic".

DTC No.	Trouble diagnosis name	DTC detecting condition	Possible cause
P1610	LOCK MODE	When ECM detects a communication malfunction between ECM and BCM 5 times or more.	—

DTC CONFIRMATION PROCEDURE

1.PERFORM DTC CONFIRMATION PROCEDURE

1. Turn ignition switch ON.
2. Check DTC in “Self-Diagnostic Result” mode of “ENGINE” using CONSULT.

Is DTC detected?

YES >> Go to SEC-80, "Diagnosis Procedure".
NO >> Inspection End.

Diagnosis Procedure

INFOID:0000000011135282

1.CHECK ENGINE START FUNCTION

1. Check that there are no DTC’s except for DTC P1610 detected.
   If detected, erase the DTC after fixing.
2. Turn ignition switch OFF.
3. Contact the registered Intelligent Key backside to push-button ignition switch and wait 5 seconds.
4. Turn ignition switch ON.
5. Turn ignition switch OFF and wait 5 seconds.
6. Repeat steps 3 and 5 twice (a total of 3 times).
7. Check that engine can start.

>> Inspection End.

P1611 ID DISCORD, IMMU-ECM

DTC Logic

INFOID:0000000011135283

DTC DETECTION LOGIC

DTC No.	Trouble diagnosis name	DTC detecting condition	Possible cause
P1611	ID DISCORD, IMMU-ECM	The ID verification results between BCM and ECM are NG.	• Harness or connectors (The CAN communication line is open or shorted.) • BCM • ECM

DTC CONFIRMATION PROCEDURE

1.PERFORM DTC CONFIRMATION PROCEDURE

1. Turn ignition switch ON.
2. Check DTC in “Self-Diagnostic Result” mode of “ENGINE” using CONSULT.

Is DTC detected?

YES >> Go to SEC-81, "Diagnosis Procedure".
NO >> Inspection End.

Diagnosis Procedure

INFOID:0000000011135284

1.PERFORM INITIALIZATION

Perform initialization of BCM and reregistration of all Intelligent Keys using CONSULT.

Can the system be initialized and can the engine be started with reregistered Intelligent Key?

YES >> Inspection End.
NO >> GO TO 2.

2.CHECK SELF DIAGNOSTIC RESULT

1. Select “Self Diagnostic Result” mode of “ENGINE” using CONSULT.
2. Erase DTC.
3. Perform DTC CONFIRMATION PROCEDURE for DTC P1611. Refer to SEC-81, "DTC Logic".

Is DTC detected?

YES >> GO TO 3.
NO >> Inspection End.

3.REPLACE BCM

1. Replace BCM. Refer to BCS-79, "Removal and Installation".
2. Perform initialization of BCM and registration of all Intelligent Keys using CONSULT.

Can the system be initialized and can the engine be started with registered Intelligent Key?

YES >> Inspection End.
NO >> GO TO 4.

4.REPLACE ECM

1. Replace ECM. Refer to EC-546, "Removal and Installation" (except for Mexico) or EC-952, "Removal and Installation" (for Mexico).
2. Perform “ADDITIONAL SERVICE WHEN REPLACING ECM”. Refer to EC-164, "Work Procedure" (except for Mexico) or EC-685, "Work Procedure" (for Mexico).

>> Inspection End.

P1612 CHAIN OF ECM-IMMU

DTC Logic

INFOID:0000000011135285

DTC DETECTION LOGIC

NOTE:

- If DTC P1612 is displayed with DTC U1000, first perform the trouble diagnosis for DTC U1000. Refer to BCS-67, "DTC Logic".
- If DTC P1612 is displayed with DTC U1010, first perform the trouble diagnosis for DTC U1010. Refer to BCS-68, "DTC Logic".

DTC No.	Trouble diagnosis name	DTC detecting condition	Possible cause
P1612	CHAIN OF BCM-ECM	Inactive communication between BCM and ECM	• Harness or connectors (The CAN communication line is open or shorted.) • ECM • BCM

DTC CONFIRMATION PROCEDURE

1.PERFORM DTC CONFIRMATION PROCEDURE

1. Turn ignition switch ON.
2. Check DTC in “Self-Diagnostic Result” mode of “BCM” using CONSULT.

Is DTC detected?

YES >> Go to SEC-82, "Diagnosis Procedure".
NO >> Inspection End.

Diagnosis Procedure

INFOID:0000000011135286

1.CHECK BCM POWER SUPPLY AND GROUND CIRCUIT.

Check BCM power supply and ground circuit. Refer to BCS-73, "Diagnosis Procedure".

Is the inspection result normal?

YES >> GO TO 2.
NO >> Repair or replace the harness.

2.CHECK ECM POWER SUPPLY AND GROUND CIRCUIT.

Check ECM power supply and ground circuit. Refer to EC-198, "Diagnosis Procedure" (except for Mexico) or EC-708, "Diagnosis Procedure" (for Mexico).

Is the inspection result normal?

YES >> GO TO 3.
NO >> Repair or replace the harness.

3.PERFORM DTC CONFIRMATION PROCEDURE.

Perform the DTC confirmation procedure. Refer to SEC-82, "DTC Logic".

Does the DTC return?

YES >> Replace BCM. Refer to BCS-79, "Removal and Installation".
NO >> Inspection End.

P1614 CHAIN OF IMMU-KEY

DTC Logic

INFOID:0000000011135287

DTC DETECTION LOGIC

DTC No.	Trouble diagnosis name	DTC detecting condition	Possible cause
P1614	CHAIN OF IMMU-KEY	Inactive communication between NATS antenna amp. and BCM	• Harness or connectors (NATS antenna amp. circuit is open or shorted.) • NATS antenna amp. • BCM • Intelligent Key fob

DTC CONFIRMATION PROCEDURE

1.PERFORM DTC CONFIRMATION PROCEDURE 1

1. Contact Intelligent Key back side to push-button ignition switch.
2. Check DTC in “Self-Diagnostic Result” mode of “ENGINE” using CONSULT.

Is DTC detected?

YES >> GO TO SEC-83, "Diagnosis Procedure".
NO >> GO TO 2.

2.PERFORM DTC CONFIRMATION PROCEDURE 2

1. Press the push-button ignition switch.
2. Check DTC in “Self-Diagnostic Result” mode of “ENGINE” using CONSULT.

Is DTC detected?

YES >> GO TO SEC-83, "Diagnosis Procedure".
NO >> Inspection End.

Diagnosis Procedure

INFOID:0000000011135288

Regarding Wiring Diagram information, refer to SEC-44, "Wiring Diagram".

1.CONNECTOR INSPECTION

1. Disconnect BCM and NATS antenna amp.
2. Check connectors and terminals for deformation, disconnection, looseness or damage.

Is the inspection result normal?

YES >> GO TO 2.
NO >> Repair or replace as necessary.

2.CHECK NATS ANTENNA AMP. CIRCUIT

1. Disconnect BCM connector and NATS antenna amp. connector.
2. Check continuity between BCM harness connector and NATS antenna amp. harness connector.

BCM		NATS antenna amp.		Continuity
Connector	Terminal	Connector	Terminal	
M80	126	M21	3	Yes
	127		1	

3. Check continuity between BCM harness connector and ground.

BCM		Ground	Continuity
Connector	Terminal		
M80	126		No
	127		

Is the inspection result normal?

YES >> GO TO 3.
NO >> Repair or replace harness.

3. CHECK NATS ANTENNA AMP INPUT SIGNAL 1

1. Turn ignition switch ON.
2. Check signal between BCM harness connector and ground using oscilloscope.

(+) BCM Connector	(+) BCM Terminal	(–)	Condition	Signal (Reference value)
M80	126, 127	Ground	When Intelligent Key is in the antenna detection area	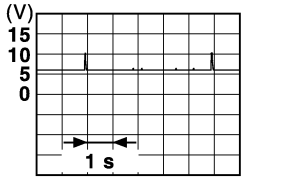 JMKIA3839GB
			When Intelligent Key is not in the antenna detection area	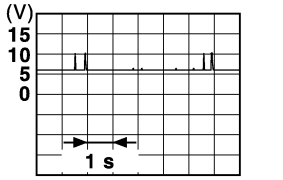 JMKIA5951GB

Is the inspection result normal?

YES >> Replace BCM. Refer to BCS-79, "Removal and Installation".
NO >> Replace NATS antenna amp. Refer to SEC-155, "Removal and Installation".

B210B STARTER CONTROL RELAY

DTC Logic

INFOID:0000000011135290

DTC DETECTION LOGIC

NOTE:

- If DTC B210B is displayed with DTC U1000, first perform the trouble diagnosis for DTC U1000. Refer to BCS-67, "DTC Logic".
- If DTC B210B is displayed with DTC U1010, first perform the trouble diagnosis for DTC U1010. Refer to BCS-68, "DTC Logic".

DTC No.	Trouble diagnosis name	DTC detecting condition	Possible cause
B210B	START CONT RLY ON	When comparing the following items, IPDM E/R detects that starter control relay is stuck in the ON position for 1 second or more: • Starter control relay signal (CAN) from BCM. • Starter relay status signal (CAN) from BCM. • Starter control relay and starter relay status signal (IPDM E/R input). • Starter control relay control signal (IPDM E/R output).	• IPDM E/R

DTC CONFIRMATION PROCEDURE

1.PERFORM DTC CONFIRMATION PROCEDURE

1. Turn the power supply position to start under the following conditions and wait for at least 1 second:
- CVT selector lever is in the P (Park) or N (Neutral) position.
- Depress the brake pedal.
2. Check “Self Diagnostic Result” using CONSULT.

Is DTC detected?

YES >> Refer to SEC-85, "Diagnosis Procedure".
NO >> Inspection End.

Diagnosis Procedure

INFOID:0000000011135291

1.INSPECTION START

Perform “Self Diagnostic Result” of “IPDM E/R” using CONSULT.

Is display history of DTC B210B CRNT?

YES >> Replace IPDM E/R. Refer to PCS-32, "Removal and Installation".
NO >> Refer to GI-50, "Intermittent Incident".

B210C STARTER CONTROL RELAY

DTC Logic

INFOID:0000000011135293

DTC DETECTION LOGIC

NOTE:

- If DTC B210C is displayed with DTC U1000, first perform the trouble diagnosis for DTC U1000. Refer to BCS-67, "DTC Logic".
- If DTC B210C is displayed with DTC U1010, first perform the trouble diagnosis for DTC U1010. Refer to BCS-68, "DTC Logic".
- When IPDM E/R power supply voltage is low (Approx. 7 - 8 V for about 1 second), the DTC B210C may be detected.

DTC No.	Trouble diagnosis name	DTC detecting condition	Possible cause
B210C	START CONT RLY OFF CIRC	When comparing the following items, IPDM E/R detects that starter control relay is stuck in the OFF position for 1 second or more: • Starter control relay signal (CAN) from BCM. • Starter relay status signal (CAN) from BCM. • Starter control relay and starter relay status signal (IPDM E/R input). • Starter control relay control signal (IPDM E/R output).	• IPDM E/R • BCM • Battery

DTC CONFIRMATION PROCEDURE

1.PERFORM DTC CONFIRMATION PROCEDURE

1. Turn the power supply position to start under the following conditions and wait for at least 1 second:
- CVT selector lever is in the P (Park) or N (Neutral) position.
- Depress the brake pedal.
2. Check “Self Diagnostic Result” using CONSULT.

Is DTC detected?

YES >> Refer to SEC-86, "Diagnosis Procedure".
NO >> Inspection End.

Diagnosis Procedure

INFOID:0000000011135294

Regarding Wiring Diagram information, refer to SEC-27, "Wiring Diagram".

1.PERFORM SELF DIAGNOSTIC RESULT

Perform “Self Diagnostic Result” of “IPDM E/R” using CONSULT.

Is display history of DTC B210C CRNT?

YES >> GO TO 2.
NO >> Refer to GI-50, "Intermittent Incident".

2.CHECK STARTER CONTROL RELAY CONTROL CIRCUITS VOLTAGE

Check voltage between IPDM E/R connectors and ground.

IPDM E/R		Ground	Voltage (Approx.)
Connector	Terminal		
E63	33	—	Battery voltage

Is the inspection result normal?

YES >> Replace IPDM E/R. Refer to PCS-32, "Removal and Installation".
NO >> GO TO 3.

3. CHECK STARTER CONTROL RELAY CONTROL CIRCUIT CONTINUITY

1. Disconnect IPDM E/R connector E63 and BCM connector M18.
2. Check continuity between IPDM E/R connector E63 and BCM connector M18.

IPDM E/R		BCM		Continuity
Connector	Terminal	Connector	Terminal	
E63	33	M18	62	Yes

3. Check continuity between IPDM E/R connector E63 and ground.

IPDM E/R		Ground	Continuity
Connector	Terminal		
E63	33	—	No

Is the inspection result normal?

YES >> Replace BCM. Refer to BCS-79, "Removal and Installation".
NO >> Repair or replace harness or connectors.

B210D STARTER RELAY

DTC Logic

INFOID:0000000011135296

DTC DETECTION LOGIC

NOTE:

- If DTC B210D is displayed with DTC U1000, first perform the trouble diagnosis for DTC U1000. Refer to BCS-67, "DTC Logic".
- If DTC B210D is displayed with DTC U1010, first perform the trouble diagnosis for DTC U1010. Refer to BCS-68, "DTC Logic".
- If DTC B210D is displayed with DTC B2617, first perform the trouble diagnosis for DTC B2617. Refer to SEC-133, "DTC Logic".

DTC No.	Trouble diagnosis name	DTC detecting condition	Possible cause
B210D	STARTER RELAY ON CIRC	When comparing the following items, IPDM E/R detects that starter control relay is stuck in the ON position for 5 second or more: • Starter control relay signal (CAN) from BCM. • Starter relay status signal (CAN) from BCM. • Starter control relay and starter relay status signal (IPDM E/R input). • Starter control relay control signal (IPDM E/R output).	• Harness or connectors (starter motor relay control circuit open or short). • IPDM E/R • BCM

DTC CONFIRMATION PROCEDURE

1.PERFORM DTC CONFIRMATION PROCEDURE

1. Ignition switch ON under the following conditions and wait for at least 1 second:
- CVT selector lever is in the P (Park) or N (Neutral) position.
- Do not depress the brake pedal.
2. Check “Self Diagnostic Result” using CONSULT.

Is DTC detected?

YES >> Refer to SEC-88, "Diagnosis Procedure".
NO >> Inspection End.

Diagnosis Procedure

INFOID:0000000011135297

Regarding Wiring Diagram information, refer to SEC-27, "Wiring Diagram".

1. PERFORM SELF DIAGNOSTIC RESULT

Perform “Self Diagnostic Result” of “IPDM E/R” using CONSULT.

Is display history of DTC B210D CRNT?

YES >> GO TO 2.
NO >> Refer to GI-50, "Intermittent Incident".

2.CHECK STARTER CONTROL RELAY CONTROL CIRCUITS VOLTAGE

Check voltage between IPDM E/R connectors and ground.

IPDM E/R		Ground	Voltage (Approx.)
Connector	Terminal		
E119	33	—	Battery voltage

Is the inspection result normal?

YES >> Replace IPDM E/R. Refer to PCS-32, "Removal and Installation".
NO >> GO TO 3.

3.CHECK STARTER CONTROL RELAY CONTROL CIRCUIT CONTINUITY

1. Disconnect IPDM E/R connectors E119 and BCM connector M19.
2. Check continuity between IPDM E/R connector E119 and ground.

IPDM E/R		Ground	Continuity
Connector	Terminal		
E119	33	—	No

Is the inspection result normal?

YES >> Refer to SEC-131, "Diagnosis Procedure".
NO >> Repair or replace harness or connectors.

B210E STARTER RELAY

DTC Logic

INFOID:0000000011135299

DTC DETECTION LOGIC

NOTE:

- If DTC B210E is displayed with DTC U1000, first perform the trouble diagnosis for DTC U1000. Refer to BCS-67, "DTC Logic".
- If DTC B210E is displayed with DTC U1010, first perform the trouble diagnosis for DTC U1010. Refer to BCS-68, "DTC Logic".
- When IPDM E/R power supply voltage is low (Approx. 7 - 8 V for about 1 second), the DTC B210F may be detected.

DTC No.	Trouble diagnosis name	DTC detecting condition	Possible cause
B210E	STARTER RELAY OFF	When comparing the following items, IPDM E/R detects that starter control relay is stuck in the OFF position for 5 second or more: • Starter control relay signal (CAN) from BCM. • Starter relay status signal (CAN) from BCM. • Starter control relay and starter relay status signal (IPDM E/R input). • Starter control relay control signal (IPDM E/R output).	• IPDM E/R • BCM • Battery

DTC CONFIRMATION PROCEDURE

1.PERFORM DTC CONFIRMATION PROCEDURE

1. Turn ignition switch ON under the following conditions and wait for at least 1 second:
- CVT selector lever is in the P (Park) or N (Neutral) position.
- Do not depress the brake pedal.
2. Check “Self Diagnostic Result” using CONSULT.

Is DTC detected?

YES >> Refer to SEC-90, "Diagnosis Procedure".
NO >> Inspection End.

Diagnosis Procedure

INFOID:0000000011135300

Regarding Wiring Diagram information, refer to SEC-27, "Wiring Diagram".

1. PERFORM SELF DIAGNOSTIC RESULT

Perform “Self Diagnostic Result” of “IPDM E/R” using CONSULT.

Is display history of DTC B210E CRNT?

YES >> GO TO 2.
NO >> Refer to GI-50, "Intermittent Incident".

2.CHECK STARTER CONTROL RELAY CONTROL CIRCUITS VOLTAGE

Check voltage between IPDM E/R connectors and ground.

IPDM E/R		Ground	Voltage (Approx.)
Connector	Terminal		
E119	33	—	Battery voltage

Is the inspection result normal?

YES >> Replace IPDM E/R. Refer to PCS-32, "Removal and Installation".
NO >> GO TO 3.

3.CHECK STARTER CONTROL RELAY CONTROL CIRCUIT CONTINUITY

1. Disconnect IPDM E/R connector E119 and BCM connector M19
2. Check continuity between IPDM E/R connector E119 and BCM connector M19.

IPDM E/R		BCM		Continuity
Connector	Terminal	Connector	Terminal	
E119	33	M19	62	Yes

Is the inspection result normal?

YES >> Replace BCM. Refer to BCS-79, "Removal and Installation".
NO >> Repair or replace harness or connectors.

B210F TRANSMISSION RANGE SWITCH

Description

INFOID:0000000011135301

IPDM E/R confirms the shift position with the following signals.
- Transmission range switch
- Shift position signal from BCM (CAN)

DTC Logic

INFOID:0000000011135302

DTC DETECTION LOGIC

NOTE:
- If DTC B210F is displayed with DTC U1000, first perform the trouble diagnosis for DTC U1000. Refer to BCS-67, "DTC Logic".
- If DTC B210F is displayed with DTC U1010, first perform the trouble diagnosis for DTC U1010. Refer to BCS-68, "DTC Logic".

DTC No.	Trouble diagnosis name	DTC detecting condition	Possible cause
B210F	TRANSMISSION RANGE SWITCH	IPDM E/R detects a mismatch between the signals below for 1 second or more. • Transmission range switch input signal • Shift position signal from BCM (CAN)	• Harness or connectors Transmission range switch circuit is open or shorted • Transmission range switch

DTC CONFIRMATION PROCEDURE

1.PERFORM DTC CONFIRMATION PROCEDURE

1. Turn ignition switch ON under the following conditions and wait for at least 1 second.
- CVT selector lever is in the P (Park) or N (Neutral) position
- Do not depress the brake pedal
2. Check “Self-diagnostic result” with CONSULT.

Is DTC detected?

YES >> Refer to SEC-92, "Diagnosis Procedure".
NO >> Inspection End.

Diagnosis Procedure

INFOID:0000000011135303

Regarding Wiring Diagram information, refer to SEC-27, "Wiring Diagram" or PCS-21, "Wiring Diagram".

1.CHECK DTC WITH BCM

Refer to BCS-51, "DTC Index".

Is the inspection result normal?

YES >> GO TO 2.
NO >> Repair or replace malfunctioning parts.

2.CHECK TRANSMISSION RANGE SWITCH INPUT SIGNAL

1. Turn ignition switch OFF.
2. Disconnect IPDM E/R harness connector.
3. Turn ignition switch ON.
4. Check voltage between IPDM E/R harness connector E119 terminal 37 and ground under following condition.

IPDM E/R		Ground	Condition		Voltage (V)
Connector	Terminal				
E119	37	Ground	CVT selector lever	P (Park) or N (Neutral)	Battery voltage
				Other than above	0

Is the inspection result normal?

YES >> Replace IPDM E/R. Refer to PCS-32, "Removal and Installation".
NO >> GO TO 3.

3. CHECK TRANSMISSION RANGE SWITCH CIRCUIT FOR CONTINUITY

1. Turn ignition switch OFF.
2. Check continuity between IPDM E/R harness connector terminals 63 and 66.

IPDM E/R			Condition		Continuity
Connector	Terminals				
F24	63	66	Transmission range switch	P or N	Yes
				Other	No

Is the inspection result normal?

YES >> GO TO 4.
NO >> GO TO 5.

4. CHECK TRANSMISSION RANGE SWITCH CIRCUIT FOR SHORT

Check continuity between IPDM E/R harness connector terminals 63, 66 and ground.

IPDM E/R		Ground	Continuity
Connector	Terminal		
F24	63	Ground	No
	66		

Is the inspection result normal?

YES >> Replace the IPDM E/R. Refer to PCS-32, "Removal and Installation".
NO >> Repair or replace harness.

5. CHECK TRANSMISSION RANGE SWITCH INPUT SIGNAL CIRCUIT

1. Disconnect transmission range switch harness connector.
2. Check continuity between transmission range switch and IPDM E/R harness connectors.

Transmission range switch		IPDM E/R		Continuity
Connector	Terminal	Connector	Terminal	
F29	7	F24	63	Yes
	10		66	

3. Check continuity between transmission range switch harness connector and ground.

Transmission range switch		Ground	Continuity
Connector	Terminal		
F29	7	Ground	No
	10		

Is the inspection result normal?

YES >> GO TO 6.
NO >> Repair harness or connector.

6. CHECK INTERMITTENT INCIDENT

Refer to GI-50, "Intermittent Incident".

>> Inspection End.

B2110 TRANSMISSION RANGE SWITCH

Description

INFOID:0000000011135304

IPDM E/R confirms the shift position with the following signals.
- Transmission range switch
- Shift position signal from BCM (CAN)

DTC Logic

INFOID:0000000011135305

DTC DETECTION LOGIC

NOTE:
- If DTC B2110 is displayed with DTC U1000, first perform the trouble diagnosis for DTC U1000. Refer to BCS-67, "DTC Logic".
- If DTC B2110 is displayed with DTC U1010, first perform the trouble diagnosis for DTC U1010. Refer to BCS-68, "DTC Logic".

DTC No.	Trouble diagnosis name	DTC detecting condition	Possible cause
B2110	TRANSMISSION RANGE SWITCH	IPDM E/R detects mismatch between the signal below for 1 second or more. • Transmission range switch input signal	• Harness or connectors Transmission range switch circuit is open or shorted • Transmission range switch

DTC CONFIRMATION PROCEDURE

1.PERFORM DTC CONFIRMATION PROCEDURE

1. Turn the ignition switch ON under the following conditions and wait for at least 1 second.
- CVT selector lever is in the P (Park) or N (Neutral) position
- Do not depress the brake pedal
2. Check “Self-diagnostic result” with CONSULT.

Is DTC detected?

YES >> Refer to SEC-95, "Diagnosis Procedure".
NO >> Inspection End.

Diagnosis Procedure

INFOID:0000000011135306

Regarding Wiring Diagram information, refer to SEC-27, "Wiring Diagram" or PCS-21, "Wiring Diagram".

1.CHECK DTC WITH BCM

Refer to BCS-51, "DTC Index".

Is the inspection result normal?

YES >> GO TO 2.
NO >> Repair or replace malfunctioning parts.

2.CHECK TRANSMISSION RANGE SWITCH INPUT SIGNAL

1. Turn ignition switch OFF.
2. Disconnect IPDM E/R harness connector.
3. Turn ignition switch ON.
4. Check voltage between IPDM E/R harness connector E119 terminal 37 and ground under following condition.

IPDM E/R		Ground	Condition		Voltage (V)
Connector	Terminal				
E119	37	Ground	CVT selector lever	P (Park) or N (Neutral)	Battery voltage
				Other than above	0

Is the inspection result normal?

YES >> Replace IPDM E/R. Refer to PCS-32, "Removal and Installation".
NO >> GO TO 3.

3. CHECK TRANSMISSION RANGE SWITCH CIRCUIT FOR CONTINUITY

1. Turn ignition switch OFF.
2. Check continuity between IPDM E/R harness connector terminals 63 and 66.

IPDM E/R			Condition		Continuity
Connector	Terminals				
F24	63	66	Transmission range switch	P or N	Yes
				Other	No

Is the inspection result normal?

YES >> GO TO 4.
NO >> GO TO 5.

4. CHECK TRANSMISSION RANGE SWITCH CIRCUIT FOR SHORT

Check continuity between IPDM E/R harness connector terminals 63, 66 and ground.

IPDM E/R		Ground	Continuity
Connector	Terminal		
F24	63	Ground	No
	66		

Is the inspection result normal?

YES >> Replace the IPDM E/R. Refer to PCS-32, "Removal and Installation".
NO >> Repair or replace harness.

5. CHECK TRANSMISSION RANGE SWITCH INPUT SIGNAL CIRCUIT

1. Disconnect transmission range switch harness connector.
2. Check continuity between transmission range switch and IPDM E/R harness connectors.

Transmission range switch		IPDM E/R		Continuity
Connector	Terminal	Connector	Terminal	
F29	7	F24	63	Yes
	10		66	

3. Check continuity between transmission range switch harness connector and ground.

Transmission range switch		Ground	Continuity
Connector	Terminal		
F29	7	Ground	No
	10		

Is the inspection result normal?

YES >> GO TO 6.
NO >> Repair harness or connector.

6. CHECK INTERMITTENT INCIDENT

Refer to GI-50, "Intermittent Incident".

>> Inspection End.

B2190 NATS ANTENNA AMP.

Description

INFOID:0000000011135307

Performs ID verification through BCM and Intelligent Key when push-button ignition switch is pressed. Prohibits starting of the engine when an unregistered ID of Intelligent Key is used.

DTC Logic

INFOID:0000000011135308

DTC DETECTION LOGIC

DTC No.	Trouble diagnosis name	DTC detecting condition	Possible cause
B2190	NATS ANTENNA AMP	Inactive communication between NATS antenna amp. and BCM.	• Harness or connectors (The NATS antenna amp. circuit is open or shorted) • NATS antenna amp. • BCM

DTC CONFIRMATION PROCEDURE

1.PERFORM DTC CONFIRMATION PROCEDURE 1

1. Contact Intelligent Key back side to push-button ignition switch.
2. Check DTC in “Self-Diagnostic Result” mode of “BCM” using CONSULT.

Is DTC detected?

YES >> GO TO SEC-98, "Diagnosis Procedure".
NO >> GO TO 2.

2.PERFORM DTC CONFIRMATION PROCEDURE 2

1. Press the push-button ignition switch.
2. Check DTC in “Self-Diagnostic Result” mode of “BCM” using CONSULT.

Is DTC detected?

YES >> GO TO SEC-98, "Diagnosis Procedure".
NO >> Inspection End.

Diagnosis Procedure

INFOID:0000000011135309

Regarding Wiring Diagram information, refer to SEC-44, "Wiring Diagram".

1.CONNECTOR INSPECTION

1. Disconnect BCM and NATS antenna amp.
2. Check connectors and terminals for deformation, disconnection, looseness or damage.

Is the inspection result normal?

YES >> GO TO 2.
NO >> Repair or replace as necessary.

2.CHECK NATS ANTENNA AMP. CIRCUIT

1. Disconnect BCM connector and NATS antenna amp. connector.
2. Check continuity between BCM harness connector and NATS antenna amp. harness connector.

BCM		NATS antenna amp.		Continuity
Connector	Terminal	Connector	Terminal	
M80	126	M21	3	Yes
	127		1	

3. Check continuity between BCM harness connector and ground.

BCM		Ground	Continuity
Connector	Terminal		
M80	126		No
	127		

Is the inspection result normal?

YES >> GO TO 3.
NO >> Repair or replace harness.

3. CHECK NATS ANTENNA AMP INPUT SIGNAL 1

1. Turn ignition switch ON.
2. Check signal between BCM harness connector and ground using oscilloscope.

(+) BCM Connector	(+) BCM Terminal	(–)	Condition	Signal (Reference value)
M80	126, 127	Ground	When Intelligent Key is in the antenna detection area	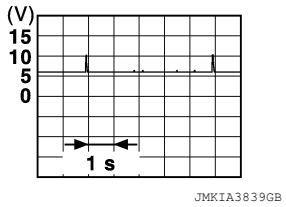 JMKIA3839GB
			When Intelligent Key is not in the antenna detection area	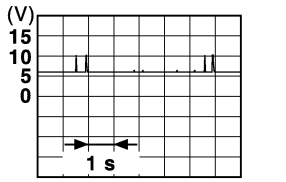 JMKIA5951GB

Is the inspection result normal?

YES >> Replace BCM. Refer to BCS-79, "Removal and Installation".
NO >> Replace NATS antenna amp. Refer to SEC-155, "Removal and Installation".

B2191, P1615 DIFFERENCE OF KEY

Description

INFOID:0000000011135310

Performs ID verification through BCM and Intelligent Key when push-button ignition switch is pressed.
Prohibits starting of the engine when an unregistered ID of Intelligent Key is used.

DTC Logic

INFOID:0000000011135311

DTC DETECTION LOGIC

DTC No.	Trouble diagnosis name	DTC detecting condition	Possible cause
B2191 P1615	DIFFERENCE OF KEY	The ID verification results between BCM and Intelligent Key are NG. The registration is necessary.	• Intelligent Key

DTC CONFIRMATION PROCEDURE

1.PERFORM DTC CONFIRMATION PROCEDURE

1. Place the back side of the Intelligent Key up to the push-button ignition switch.
2. Press the push-button ignition switch.
3. Check “Self-Diagnostic Result” with CONSULT.

Is DTC detected?

YES >> Refer to SEC-100, "Diagnosis Procedure".
NO >> Inspection End.

Diagnosis Procedure

INFOID:0000000011135312

1.PERFORM INITIALIZATION

Perform initialization with CONSULT. Re-register all Intelligent Keys.
For initialization and registration of Intelligent Key, refer to CONSULT Immobilizer mode and follow the on-screen instructions.

Can the system be initialized and can the engine be started with re-registered Intelligent Key?

YES >> Intelligent Key was unregistered.
NO >> Intelligent Key fob is malfunctioning.
- Replace Intelligent Key fob.
- Perform initialization again.

B2192 ID DISCORD, IMMU-ECM

DTC Logic

INFOID:0000000011135313

DTC DETECTION LOGIC

DTC No.	Trouble diagnosis name	DTC detecting condition	Possible cause
B2192	ID DISCORD BCM-ECM	The ID verification results between BCM and ECM are NG.	• Harness or connectors (The CAN communication line is open or shorted.) • BCM • ECM

DTC CONFIRMATION PROCEDURE

1.PERFORM DTC CONFIRMATION PROCEDURE

1. Turn ignition switch ON.
2. Check DTC in “Self-Diagnostic Result” mode of “BCM” using CONSULT.

Is DTC detected?

YES >> GO TO SEC-101, "Diagnosis Procedure".
NO >> Inspection End.

Diagnosis Procedure

INFOID:0000000011135314

1.PERFORM INITIALIZATION

Perform initialization of BCM and reregistration of all Intelligent Keys using CONSULT.

Can the system be initialized and can the engine be started with reregistered Intelligent Key?

YES >> Inspection End.
NO >> GO TO 2.

2.CHECK SELF-DIAGNOSIS RESULT

1. Select “Self Diagnostic Result” mode of “BCM” using CONSULT.
2. Erase DTC.
3. Perform DTC CONFIRMATION PROCEDURE for DTC B2192. Refer to SEC-101, "DTC Logic".

Is DTC detected?

YES >> GO TO 3.
NO >> Inspection End.

3.REPLACE BCM

1. Replace BCM. Refer to BCS-79, "Removal and Installation".
2. Perform initialization of BCM and reregistration of all Intelligent Keys using CONSULT.

Can the system be initialized and can the engine be started with registered Intelligent Key?

YES >> Inspection End.
NO >> GO TO 4.

4.REPLACE ECM

1. Replace ECM. Refer to EC-546, "Removal and Installation" (except for Mexico) or EC-952, "Removal and Installation" (for Mexico).
2. Perform “ADDITIONAL SERVICE WHEN REPLACING ECM”. Refer to EC-164, "Work Procedure" (except for Mexico) or EC-681, "Work Procedure" (for Mexico).

>> Inspection End.

B2193 CHAIN OF ECM-IMMU

DTC Logic

INFOID:0000000011135315

DTC DETECTION LOGIC

NOTE:

- If DTC B2193 is displayed with DTC U1000, first perform the trouble diagnosis for DTC U1000. Refer to BCS-67, "DTC Logic".
- If DTC B2193 is displayed with DTC U1010, first perform the trouble diagnosis for DTC U1010. Refer to BCS-68, "DTC Logic".

DTC No.	Trouble diagnosis name	DTC detecting condition	Possible cause
B2193	CHAIN OF BCM-ECM	Inactive communication between BCM and ECM	• Harness or connectors (The CAN communication line is open or shorted.) • ECM • BCM

DTC CONFIRMATION PROCEDURE

1.PERFORM DTC CONFIRMATION PROCEDURE

1. Turn ignition switch ON.
2. Check DTC in “Self-Diagnostic Result” mode of “BCM” using CONSULT.

Is DTC detected?

YES >> GO TO SEC-102, "Diagnosis Procedure".
NO >> Inspection End.

Diagnosis Procedure

INFOID:0000000011135316

1.CHECK BCM POWER SUPPLY AND GROUND CIRCUIT.

Check BCM power supply and ground circuit. Refer to BCS-73, "Diagnosis Procedure".

Is the inspection result normal?

YES >> GO TO 2.
NO >> Repair or replace the harness.

2.CHECK ECM POWER SUPPLY AND GROUND CIRCUIT.

Check ECM power supply and ground circuit. Refer to EC-198, "Diagnosis Procedure" (except for Mexico) or EC-708, "Diagnosis Procedure" (for Mexico).

Is the inspection result normal?

YES >> Replace ECM. Refer to EC-546, "Removal and Installation" (except for Mexico) or EC-952, "Removal and Installation" (for Mexico). GO TO 3.
NO >> Repair or replace the harness.

3.PERFORM DTC CONFIRMATION PROCEDURE.

Perform the DTC confirmation procedure. Refer to SEC-102, "DTC Logic".

Does the DTC return?

YES >> Replace BCM. Refer to BCS-79, "Removal and Installation".
NO >> Inspection End.

B2195 ANTI-SCANNING

DTC Logic

INFOID:0000000011135317

DTC DETECTION LOGIC

DTC No.	Trouble diagnosis name	DTC detecting condition	Possible cause
B2195	ANTI-SCANNING	ID verification between BCM and ECM that is out of the designated specification is detected.	ID verification request out of the designated specification

DTC CONFIRMATION PROCEDURE

1.PERFORM DTC CONFIRMATION PROCEDURE

1. Turn ignition switch ON.
2. Check DTC in “Self-Diagnostic Result” mode of “BCM” using CONSULT.

Is DTC detected?

YES >> Refer to SEC-103, "Diagnosis Procedure".
NO >> Inspection End.

Diagnosis Procedure

INFOID:0000000011135318

1.CHECK SELF-DIAGNOSTIC RESULT 1

1. Select “Self-Diagnostic Result” mode of “BCM” using CONSULT.
2. Erase DTC.
3. Perform DTC CONFIRMATION PROCEDURE for DTC B2195. Refer to SEC-103, "DTC Logic".

Is DTC detected?

YES >> GO TO 2.
NO >> Inspection End.

2.CHECK EQUIPMENT OF THE VEHICLE

Check that unspecified accessory part related to engine start is not installed.

Is unspecified accessory part related to engine start installed?

YES >> GO TO 3.
NO >> GO TO 4.

3.CHECK SELF DIAGNOSTIC RESULT 2

1. Obtain the customers approval to remove unspecified accessory part related to engine start, and then remove it.
2. Select “Self-Diagnostic Result” of “BCM” using CONSULT.
3. Erase DTC.
4. Perform DTC CONFIRMATION PROCEDURE for DTC B2195. Refer to SEC-103, "DTC Logic".

Is DTC detected?

YES >> GO TO 4.
NO >> Inspection End.

4.REPLACE BCM

1. Replace BCM. Refer to BCS-79, "Removal and Installation".
2. Perform initialization of BCM and registration of all Intelligent Keys using CONSULT.

>> Inspection End.

B2196 DONGLE UNIT

Description

INFOID:0000000011135319

BCM performs ID verification between BCM and dongle unit.
When verification result is OK, BCM permits cranking.

DTC Logic

INFOID:0000000011135320

DTC DETECTION LOGIC

NOTE:

- If DTC B2196 is displayed with DTC U1000, first perform the trouble diagnosis for DTC U1000. Refer to BCS-67, "DTC Logic".
- If DTC B2196 is displayed with DTC U1010, first perform the trouble diagnosis for DTC U1010. Refer to BCS-68, "DTC Logic".

DTC No.	Trouble diagnosis name	DTC detecting condition	Possible cause
B2196	DONGLE NG	The ID verification results between BCM and dongle unit is NG.	• Harness or connectors (Dongle unit circuit is open or shorted.) • Dongle unit

DTC CONFIRMATION PROCEDURE

1.PERFORM DTC CONFIRMATION PROCEDURE

1. Turn ignition switch ON.
2. Turn ignition switch OFF.
3. Turn ignition switch ON.
4. Check “Self-diagnosis result” using CONSULT.

Is the DTC detected?

YES >> Refer to SEC-104, "Diagnosis Procedure".
NO >> Inspection End.

Diagnosis Procedure

INFOID:0000000011135321

Regarding Wiring Diagram information, refer to SEC-44, "Wiring Diagram".

1.PERFORM INITIALIZATION

1. Perform initialization of BCM and reregistration of all Intelligent Keys using CONSULT.
2. Start the engine.

Dose the engine start?

YES >> Inspection End.
NO >> GO TO 2.

2.CHECK DONGLE UNIT CIRCUIT

1. Turn ignition switch OFF.
2. Disconnect BCM connector and dongle unit connector.
3. Check continuity between BCM harness connector and dongle unit harness connector.

BCM		Dongle unit		Continuity
Connector	Terminal	Connector	Terminal	
M19	52	M29	1	Yes

4. Check continuity between BCM harness connector and ground.

BCM		Ground	Continuity
Connector	Terminal		
M19	52		No

Is the inspection result normal?

YES >> GO TO 3.
NO >> Repair or replace harness.

3. CHECK DONGLE UNIT GROUND CIRCUIT

Check continuity between dongle unit harness connector and ground.

Dongle unit		Ground	Continuity
Connector	Terminal		
M29	4		Yes

Is the inspection result normal?

YES >> Replace dongle unit.
NO >> Repair or replace harness.

B2198 NATS ANTENNA AMP.

DTC Logic

INFOID:0000000011135322

DTC DETECTION LOGIC

DTC No.	Trouble diagnosis name	DTC detecting condition	Possible cause
B2198	NATS ANTENNA AMP	Inactive communication between NATS antenna amp. and BCM.	• Harness or connectors (The NATS antenna amp. circuit is open or shorted) • NATS antenna amp. • BCM

DTC CONFIRMATION PROCEDURE

1.PERFORM DTC CONFIRMATION PROCEDURE 1

1. Contact Intelligent Key back side to push-button ignition switch.
2. Check DTC in “Self-Diagnostic Result” mode of “BCM” using CONSULT.

Is DTC detected?

YES >> GO TO SEC-106, "Diagnosis Procedure".
NO >> GO TO 2.

2.PERFORM DTC CONFIRMATION PROCEDURE 2

1. Press the push-button ignition switch.
2. Check DTC in “Self-Diagnostic Result” mode of “BCM” using CONSULT.

Is DTC detected?

YES >> GO TO SEC-106, "Diagnosis Procedure".
NO >> Inspection End.

Diagnosis Procedure

INFOID:0000000011135323

Regarding Wiring Diagram information, refer to SEC-44, "Wiring Diagram".

1.CONNECTOR INSPECTION

1. Disconnect BCM and NATS antenna amp.
2. Check connectors and terminals for deformation, disconnection, looseness or damage.

Is the inspection result normal?

YES >> GO TO 2.
NO >> Repair or replace as necessary.

2.CHECK NATS ANTENNA AMP. CIRCUIT

1. Disconnect BCM connector and NATS antenna amp. connector.
2. Check continuity between BCM harness connector and NATS antenna amp. harness connector.

BCM		NATS antenna amp.		Continuity
Connector	Terminal	Connector	Terminal	
M80	126	M21	3	Yes
	127		1	

3. Check continuity between BCM harness connector and ground.

BCM		Ground	Continuity
Connector	Terminal		
M80	126		No
	127		

Is the inspection result normal?

YES >> GO TO 3.
NO >> Repair or replace harness.

3. CHECK NATS ANTENNA AMP INPUT SIGNAL 1

1. Turn ignition switch ON.
2. Check signal between BCM harness connector and ground using oscilloscope.

(+) BCM Connector	(+) BCM Terminal	(–)	Condition	Signal (Reference value)
M80	126, 127	Ground	When Intelligent Key is in the antenna detection area	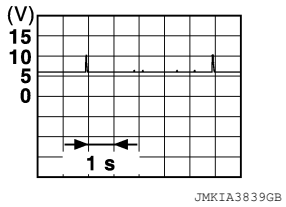 JMKIA3839GB
			When Intelligent Key is not in the antenna detection area	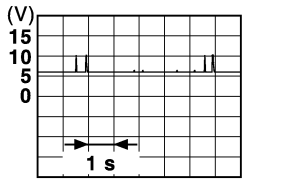 JMKIA5951GB

Is the inspection result normal?

YES >> Replace BCM. Refer to BCS-79, "Removal and Installation".
NO >> Replace NATS antenna amp. Refer to SEC-155, "Removal and Installation".

B2555 STOP LAMP

DTC Logic

INFOID:0000000011135324

DTC DETECTION LOGIC

DTC No.	Trouble diagnosis name	DTC detecting condition	Possible cause
B2555	STOP LAMP	BCM makes a comparison between the upper voltage and lower voltage of stop lamp switch. It judges from their values to detect the malfunctioning circuit.	• Harness or connectors (Stop lamp switch circuit is open or shorted.) • Stop lamp switch • Fuse • BCM

DTC CONFIRMATION PROCEDURE

1.PERFORM DTC CONFIRMATION PROCEDURE

1. Depress the brake pedal and wait 1 second or more.
2. Check DTC in “Self-Diagnostic Result” mode of “BCM” using CONSULT.

Is DTC detected?

YES >> Go to SEC-108, "Diagnosis Procedure".
NO >> Inspection End.

Diagnosis Procedure

INFOID:0000000011135325

Regarding Wiring Diagram information, refer to SEC-27, "Wiring Diagram".

1.CHECK BRAKE SWITCH FUNCTION

1. Turn ignition switch ON.
2. Select “BRAKE SW1” and "BRAKE SW2" in DATA MONITOR mode of INTELLIGENT KEY with CONSULT.
3. Check “BRAKE SW1” and "BRAKE SW2" indication under the following conditions.

Monitor item	Condition		Indication
BRAKE SW1	Brake pedal	Depressed	OFF
		Released	ON
BRAKE SW2	Brake pedal	Depressed	ON
		Released	OFF

Is the inspection result normal?

YES >> Refer to GI-50, "Intermittent Incident".
NO-1 >> If BRAKE SW1 is incorrect. GO TO 2.
NO-2 >> If BRAKE SW2 is incorrect. GO TO 3.

2.CHECK STOP LAMP SWITCH INPUT SIGNAL 1

1. Turn ignition switch OFF.
2. Disconnect BCM connector.
3. Check voltage between BCM harness connector and ground.

(+)		(–)	Voltage (V)
BCM			
Connector	Terminal		
M18	25	Ground	Battery voltage

Is the inspection normal?

YES >> GO TO 7.
NO-1 >> Check 10 A fuse [No. 10, located in the fuse block (J/B)].
NO-2 >> Check harness for open or short between BCM and fuse.

3.CHECK STOP LAMP SWITCH INPUT SIGNAL 2

1. Disconnect BCM connector M18.
2. Check voltage between BCM harness connector and ground.

(+)		(–)	Condition		Voltage (V)
BCM					
Connector	Terminal				
M18	27	Ground	Brake pedal	Depressed	Battery voltage
				Not depressed	0

Is the inspecting result normal?

YES >> GO TO 7.
NO >> GO TO 4.

4.CHECK STOP LAMP SWITCH POWER SUPPLY CIRCUIT

1. Disconnect stop lamp switch connector.
2. Check voltage between stop lamp switch harness connector and ground.

(+)		(–)	Voltage (V)
Stop lamp switch			
Connector	Terminal		
E38	1	Ground	Battery voltage

Is the inspection result normal?

YES >> GO TO 5.
NO >> Check harness for open or short between stop lamp switch and fuse.

5.CHECK STOP LAMP SWITCH CIRCUIT

1. Check continuity between stop lamp switch harness connector and BCM harness connector.

Stop lamp switch		BCM		Continuity
Connector	Terminal	Connector	Terminal	
E38	2	M18	27	Yes

2. Check continuity between stop lamp switch harness connector and ground.

Stop lamp switch		Ground	Continuity
Connector	Terminal		
E38	2		No

Is the inspection result normal?

YES >> GO TO 6.
NO >> Repair or replace harness.

6.CHECK STOP LAMP SWITCH

Refer to SEC-110, "Component Inspection".

Is the inspection result normal?

YES >> GO TO 9.
NO >> Replace stop lamp switch. Refer to BR-20, "Exploded View".

7.CONNECTOR INSPECTION

Check BCM connectors and terminals for deformation, disconnection, looseness or damage.

Is the inspection result normal?

YES >> GO TO 8.
NO >> Repair or replace as necessary.

8.REPLACE BCM

1. Replace BCM. Refer to BCS-79, "Removal and Installation".
2. Perform initialization of BCM and registration of all Intelligent Keys using CONSULT.

>> Inspection End.

9.CHECK INTERMITTENT INCIDENT

Refer to GI-50, "Intermittent Incident".

>> Inspection End.

Component Inspection

INFOID:0000000011135326

1.CHECK STOP LAMP SWITCH

1. Turn ignition switch OFF.
2. Disconnect stop lamp switch connector.
3. Check continuity between stop lamp switch terminals.

Stop lamp switch		Condition		Continuity
Terminal				
1	2	Brake pedal	Not depressed	No
			Depressed	Yes

Is the inspection result normal?

YES >> Inspection End.
NO >> Replace stop lamp switch. Refer to BR-20, "Exploded View".

B2556 PUSH-BUTTON IGNITION SWITCH

DTC Logic

INFOID:0000000011135327

DTC DETECTION LOGIC

DTC No.	Trouble diagnosis name	DTC detecting condition	Possible cause
B2556	PUSH-BTN IGN SW	BCM detects the push-button ignition switch stuck at ON for 100 seconds or more.	• Harness or connectors (Push-button ignition switch circuit is shorted.) • Push-button ignition switch • BCM

DTC CONFIRMATION PROCEDURE

1.PERFORM DTC CONFIRMATION PROCEDURE

1. Press push-button ignition switch under the following condition:
- Brake pedal: Not depressed
2. Release push-button ignition switch and wait 100 seconds or more.
3. Check DTC in “Self-Diagnostic Result” mode of “BCM” using CONSULT.

Is DTC detected?

YES >> GO TO SEC-111, "Diagnosis Procedure".
NO >> Inspection End.

Diagnosis Procedure

INFOID:0000000011135328

Regarding Wiring Diagram information, refer to SEC-27, "Wiring Diagram".

1.CHECK PUSH-BUTTON IGNITION SWITCH INPUT SIGNAL

1. Turn ignition switch OFF.
2. Disconnect push-button ignition switch connector.
3. Check voltage between push-button ignition switch harness connector and ground.

(+)		(–)	Voltage (V) (Approx.)
Push-button ignition switch			
Connector	Terminal		
M17	8	Ground	12

Is the inspection result normal?

YES >> GO TO 4.
NO >> GO TO 2.

2.CHECK PUSH-BUTTON IGNITION SWITCH CIRCUIT

1. Disconnect BCM connector and IPDM E/R connector.
2. Check continuity between push-button ignition switch harness connector and BCM harness connector.

Push-button ignition switch		BCM		Continuity
Connector	Terminal	Connector	Terminal	
M17	8	M18	1	Yes

3. Check continuity between push-button ignition switch harness connector and ground.

Push-button ignition switch		Ground	Continuity
Connector	Terminal		
M17	8		No

Is the inspection result normal?

YES >> GO TO 3.
NO >> Repair or replace harness.

3.REPLACE BCM

1. Replace BCM. Refer to BCS-79, "Removal and Installation".
2. Perform initialization of BCM and registration of all Intelligent Keys using CONSULT.

>> Inspection End.

4.CHECK PUSH-BUTTON IGNITION SWITCH

Refer to SEC-112, "Component Inspection".

Is the inspection result normal?

YES >> GO TO 5.
NO >> Replace push-button ignition switch. Refer to SEC-156, "Removal and Installation".

5.CHECK INTERMITTENT INCIDENT

Refer to GI-50, "Intermittent Incident".

>> Inspection End.

Component Inspection

INFOID:0000000011135329

1.CHECK PUSH-BUTTON IGNITION SWITCH

1. Turn ignition switch OFF.
2. Disconnect push-button ignition switch connector.
3. Check continuity between push-button ignition switch terminals.

Push-button ignition switch		Condition		Continuity
Terminal				
4	8	Push-button ignition switch	Pressed	Yes
			Not pressed	No

Is the inspection result normal?

YES >> Inspection End.
NO >> Replace push-button ignition switch. Refer to SEC-156, "Removal and Installation".

B2557 VEHICLE SPEED

DTC Logic

INFOID:0000000011135330

DTC DETECTION LOGIC

NOTE:

- If DTC B2557 is displayed with DTC U1000, first perform the trouble diagnosis for DTC U1000. Refer to BCS-67, "DTC Logic".
- If DTC B2557 is displayed with DTC U1010, first perform the trouble diagnosis for DTC U1010. Refer to BCS-68, "DTC Logic".

DTC No.	Trouble diagnosis name	DTC detecting condition	Possible causes
B2557	VEHICLE SPEED	BCM detects one of the following conditions for 10 seconds continuously. • Vehicle speed signal from combination meter is 10 km/h (6.2 MPH) or more, and vehicle speed signal from ABS actuator and electric unit (control unit) is 4 km/h (2.5 MPH) or less. • Vehicle speed signal from combination meter is 4 km/h (2.5 MPH) or less, and vehicle speed signal from ABS actuator and electric unit (control unit) is 10 km/h (6.2 MPH) or more.	• Harness or connectors (The CAN communication line is open or shorted.) • Combination meter • ABS actuator and electric unit (control unit)

DTC CONFIRMATION PROCEDURE

1.PERFORM DTC CONFIRMATION PROCEDURE

1. Start engine and wait 10 seconds or more.
2. Drive the vehicle at a vehicle speed of 10 km/h (6.2 MPH) or more for 10 seconds or more.
3. Check DTC in “Self-Diagnostic Result” mode of “BCM” using CONSULT.

Is DTC detected?

YES >> GO TO SEC-113, "Diagnosis Procedure".
NO >> Inspection End.

Diagnosis Procedure

INFOID:0000000011135331

1.CHECK DTC OF “ABS ACTUATOR AND ELECTRIC UNIT (CONTROL UNIT)”

Check DTC in “Self-Diagnostic Result” mode of “ABS” using CONSULT.

Is DTC detected?

YES >> Perform the trouble diagnosis related to the detected DTC. Refer to BRC-46, "DTC Index".
NO >> GO TO 2.

2.CHECK DTC OF “COMBINATION METER”

Check DTC in “Self-Diagnostic Result” mode of “METER/M&A” using CONSULT.

Is DTC detected?

YES >> Perform the trouble diagnosis related to the detected DTC. Refer to MWI-26, "DTC Index".
NO >> GO TO 3.

3.CHECK INTERMITTENT INCIDENT

Refer to GI-50, "Intermittent Incident" .

>> Inspection End.

B2560 STARTER CONTROL RELAY

Description

INFOID:0000000011135332

Starter control relay, integrated in IPDM E/R, permits the starter relay operation when in N (Neutral) or P (Park) position.

DTC Logic

INFOID:0000000011135333

DTC DETECTION LOGIC

NOTE:

- If DTC B2560 is displayed with DTC U1000, first perform the trouble diagnosis for DTC U1000. Refer to BCS-67, "DTC Logic".
- If DTC B2560 is displayed with DTC U1010, first perform the trouble diagnosis for DTC U1010. Refer to BCS-68, "DTC Logic".

DTC	Self-diagnosis name	DTC detecting condition	Possible causes
B2560	STARTER CONTROL RELAY	BCM detects a mismatch between the OFF request of starter control relay to IPDM E/R and the feedback. (The feedback is ON instead of OFF.)	• IPDM E/R

DTC CONFIRMATION PROCEDURE

1.PERFORM DTC CONFIRMATION PROCEDURE

1. Turn ignition switch ON under the following conditions and wait for at least 2 seconds:
- CVT selector lever is in the P (Park) position.
- Depress the brake pedal.
2. Check “Self-Diagnostic Result” with CONSULT.

Is DTC detected?

YES >> Refer to SEC-114, "Diagnosis Procedure".
NO >> Inspection End.

Diagnosis Procedure

INFOID:0000000011135334

1.CHECK DTC WITH IPDM E/R

Check “Self Diagnostic Result” with CONSULT. Refer to PCS-20, "DTC Index".

Is the inspection result normal?

YES >> GO TO 2.
NO >> Repair or replace malfunctioning parts.

2.CHECK INTERMITTENT INCIDENT

Refer to GI-50, "Intermittent Incident".

>> Inspection End.

B2601 SHIFT POSITION

DTC Logic

INFOID:0000000011135335

DTC DETECTION LOGIC

NOTE:

- If DTC B2601 is displayed with DTC U1000, first perform the trouble diagnosis for DTC U1000. Refer to BCS-67, "DTC Logic".
- If DTC B2601 is displayed with DTC U1010, first perform the trouble diagnosis for DTC U1010. Refer to BCS-68, "DTC Logic".

DTC No.	Trouble diagnosis name	DTC detecting condition	Possible cause
B2601	SHIFT POSITION	When there is a difference between P (Park) range signal from CVT shift selector (park position switch) and P (Park) position signal from IPDM E/R (CAN).	• Harness or connectors (CAN communication line is open or shorted.) • Harness or connectors [CVT shift selector (park position switch) circuit is open or shorted.] • CVT shift selector (park position switch) • BCM

DTC CONFIRMATION PROCEDURE

1.PERFORM DTC CONFIRMATION PROCEDURE

1. Shift the selector lever to the P (Park) position.
2. Turn ignition switch ON and wait 2 seconds or more.
3. Shift the selector lever to any position other than P (Park) and wait 2 seconds or more.
4. Check DTC in “Self-Diagnostic Result” mode of “BCM” using CONSULT.

Is DTC detected?

YES >> Go to SEC-115, "Diagnosis Procedure".
NO >> Inspection End.

Diagnosis Procedure

INFOID:0000000011135336

Regarding Wiring Diagram information, refer to SEC-27, "Wiring Diagram".

1.CHECK CVT SHIFT SELECTOR SWITCH FUNCTION

1. Turn ignition switch ON.
2. Select “DETE/CANCEL SW” and "DETENT SW - IPDM" in DATA MONITOR mode with CONSULT.
3. Check “DETE/CANCEL SW” and "DETENT SW - IPDM" indication under the following conditions.

Monitor item	Condition		Indication
DETE/CANCEL SW	CVT Shift selector	In any position other than P (Park)	OFF
		P (Park)	ON
DETENT SW - IPDM	CVT Shift selector	In any position other than P (Park)	OFF
		P (Park)	ON

Is the inspection result normal?

YES >> Refer to GI-50, "Intermittent Incident".
NO-1 >> If DETE/CANCEL SW function is incorrect. GO TO 2.
NO-2 >> If DETENT SW - IPDM function is incorrect. GO TO 5.

2.CHECK CVT SHIFT SELECTOR CIRCUIT (BCM)

1. Disconnect BCM connector and IPDM E/R connector.
2. Check continuity between CVT shift selector (park position switch) harness connector and BCM harness connector.

CVT shift selector (park position switch)		BCM		Continuity
Connector	Terminal	Connector	Terminal	
M78	6	M18	20	Yes

3. Check continuity between CVT shift selector (park position switch) harness connector and ground.

CVT shift selector (park position switch)		Ground	Continuity
Connector	Terminal		
M78	6		No

Is the inspection result normal?

YES >> GO TO 3.
NO >> Repair or replace harness.

3.CONNECTOR INSPECTION

1. Disconnect BCM.
2. Check connectors and terminals for deformation, disconnection, looseness or damage.

Is the inspection result normal?

YES >> GO TO 4.
NO >> Repair or replace as necessary.

4.REPLACE BCM

1. Replace BCM. Refer to BCS-79, "Removal and Installation".
2. Perform initialization of BCM and registration of all Intelligent Keys using CONSULT.

>> Inspection End.

5.CHECK CVT SHIFT SELECTOR CIRCUIT (IPDM E/R)

Check continuity between CVT shift selector (park position switch) harness connector and IPDM E/R harness connector.

CVT shift selector (park position switch)		IPDM E/R		Continuity
Connector	Terminal	Connector	Terminal	
M78	6	E119	31	Yes

Is the inspection result normal?

YES >> GO TO 6.
NO >> Repair or replace harness.

6.CONNECTOR INSPECTION

1. Disconnect IPDM E/R.
2. Check connectors and terminals for deformation, disconnection, looseness or damage.

Is the inspection result normal?

YES >> GO TO 7.
NO >> Repair or replace as necessary.

7.REPLACE IPDM E/R

1. Replace IPDM E/R. Refer to PCS-32, "Removal and Installation".

>> Inspection End.

Component Inspection

INFOID:0000000011135337

1. CHECK CVT SHIFT SELECTOR (PARK POSITION SWITCH)

1. Turn ignition switch OFF.
2. Disconnect CVT shift selector connector.
3. Check continuity between CVT shift selector (park position switch) terminals.

CVT shift selector (park position switch)		Condition		Continuity
Terminal				
5	6	Selector lever	P (Park) position	No
			Other than above	Yes

Is the inspection result normal?

YES >> Inspection End.
NO >> Replace CVT shift selector. Refer to TM-190, "Removal and Installation" (RE0F10E) or TM-402, "Removal and Installation" (RE0F10J).

B2602 SHIFT POSITION

DTC Logic

INFOID:0000000011135338

DTC DETECTION LOGIC

NOTE:

- If DTC B2602 is displayed with DTC U1000, first perform the trouble diagnosis for DTC U1000. Refer to BCS-67, "DTC Logic".
- If DTC B2602 is displayed with DTC U1010, first perform the trouble diagnosis for DTC U1010. Refer to BCS-68, "DTC Logic".

DTC No.	Trouble diagnosis name	DTC detecting condition	Possible cause
B2602	SHIFT POSITION	BCM detects the following status for 10 seconds. • Selector lever is in the P (Park) position • Vehicle speed is 4 km/h (2.5 MPH) or more • Ignition switch is in the ON position	• Harness or connectors (CAN communication line is open or shorted.) • Harness or connectors [CVT shift selector (park position switch) circuit is open or shorted.] • CVT shift selector (park position switch) • Combination meter • BCM

DTC CONFIRMATION PROCEDURE

1.PERFORM DTC CONFIRMATION PROCEDURE

1. Start engine.
2. Drive vehicle at a speed of 4 km/h (2.5 MPH) or more for 10 seconds or more.
3. Check DTC in “Self-Diagnostic Result” mode of “BCM” using CONSULT.

Is DTC detected?

YES >> Go to SEC-118, "Diagnosis Procedure".
NO >> Inspection End.

Diagnosis Procedure

INFOID:0000000011135339

Regarding Wiring Diagram information, refer to SEC-27, "Wiring Diagram".

1.CHECK CVT SHIFT SELECTOR SWITCH FUNCTION

1. Turn ignition switch ON.
2. Select “DETE/CANCEL SW” and "VEH SPEED 1" in DATA MONITOR mode with CONSULT.
3. Check “DETE/CANCEL SW” and "VEH SPEED 1" indication under the following conditions.

Monitor item	Condition		Indication
DETE/CANCEL SW	CVT Shift selector	In any position other than P (Park)	OFF
		P (Park)	ON
VEH SPEED 1	Vehicle not moving		0
	Vehicle moving		Varies

Is the inspection result normal?

YES >> Refer to GI-50, "Intermittent Incident".
NO-1 >> If DETE/CANCEL SW is incorrect. GO TO 4.
NO-2 >> If VEH SPEED 1 is incorrect. GO TO 2.

2.CHECK DTC OF COMBINATION METER

Check DTC in “Self-Diagnostic Result” mode of “METER/M&A” using CONSULT.

Is DTC detected?

YES >> Perform the trouble diagnosis related to the detected DTC. Refer to MWI-26, "DTC Index".
NO >> GO TO 3.

3. CHECK DTC OF ABS ACTUATOR AND ELECTRIC UNIT (CONTROL UNIT)

Check DTC in “Self-Diagnostic Result” mode of “ABS” using CONSULT.

Is DTC detected?

YES >> Perform the trouble diagnosis related to the detected DTC. Refer to BRC-46, "DTC Index".
NO >> GO TO 6.

4. CHECK CVT SHIFT SELECTOR CIRCUIT

1. Disconnect BCM connector and IPDM E/R connector.
2. Check continuity between CVT shift selector (park position switch) harness connector and BCM harness connector.

CVT shift selector (park position switch)		BCM		Continuity
Connector	Terminal	Connector	Terminal	
M78	6	M18	20	Yes

3. Check continuity between CVT shift selector (park position switch) harness connector and ground.

CVT shift selector (park position switch)		Ground	Continuity
Connector	Terminal		
M78	6		No

Is the inspection result normal?

YES >> GO TO 5.
NO >> Repair or replace harness.

5. CHECK CVT SHIFT SELECTOR (PARK POSITION SWITCH)

Refer to SEC-119, "Component Inspection".

Is the inspection result normal?

YES >> GO TO 6.
NO >> Replace CVT shift selector. Refer to TM-190, "Removal and Installation" (RE0F10E) or TM-402, "Removal and Installation" (RE0F10J).

6. CHECK INTERMITTENT INCIDENT

Refer to GI-50, "Intermittent Incident".

>> Inspection End.

Component Inspection

INFOID:0000000011135340

1. CHECK CVT SHIFT SELECTOR (PARK POSITION SWITCH)

1. Turn ignition switch OFF.
2. Disconnect CVT shift selector connector.
3. Check continuity between CVT shift selector (park position switch) terminals.

CVT shift selector (park position switch)		Condition		Continuity
Terminal				
5	6	Selector lever	P (Park) position	No
			Other than above	Yes

Is the inspection result normal?

YES >> Inspection End.

NO >> Replace CVT shift selector. Refer to TM-190, "Removal and Installation" (RE0F10E) or TM-402, "Removal and Installation" (RE0F10J).

B2603 SHIFT POSITION

DTC Logic

INFOID:0000000011135341

DTC DETECTION LOGIC

NOTE:

- If DTC B2603 is displayed with DTC B2601, first perform the trouble diagnosis for DTC B2601. Refer to SEC-115, "DTC Logic".

DTC No.	Trouble diagnosis name	DTC detecting condition	Possible causes
B2603	SHIFT POSI STATUS	BCM detects the following status when ignition switch is in the ON position. • P (Park) position signal from TCM: approx. 0 V • CVT shift selector (park position switch) signal: approx. 0 V	• Harness or connector [CVT shift selector (park position switch) circuit is open or shorted.] • Harness or connectors (TCM circuit is open or shorted.) • CVT shift selector (park position switch) • CVT assembly (TCM) • BCM

DTC CONFIRMATION PROCEDURE

1.PERFORM DTC CONFIRMATION PROCEDURE 1

1. Shift the selector lever to the P (Park) position.
2. Turn ignition switch ON and wait 1 second or more.
3. Check DTC in “Self-Diagnostic Result” mode of “BCM” using CONSULT.

Is DTC detected?

YES >> Go to SEC-121, "Diagnosis Procedure".
NO >> GO TO 2.

2.PERFORM DTC CONFIRMATION PROCEDURE 2

1. Shift the selector lever to any position other than P (Park) and wait 1 second or more.
2. Check DTC in “Self-Diagnostic Result” mode of “BCM” using CONSULT.

Is DTC detected?

YES >> Go to SEC-121, "Diagnosis Procedure".
NO >> Inspection End.

Diagnosis Procedure

INFOID:0000000011135342

Regarding Wiring Diagram information, refer to SEC-27, "Wiring Diagram".

1.CHECK CVT SHIFT SELECTOR SWITCH FUNCTION

1. Turn ignition switch ON.
2. Select “DETE/CANCEL SW” and "SFT PN/N SW" in DATA MONITOR mode with CONSULT.
3. Check “DETE/CANCEL SW” and "SFT PN/N SW" indication under the following conditions.

Monitor item	Condition		Indication
DETE/CANCEL SW	CVT Shift selector	In any position other than P (Park)	OFF
		P (Park)	ON
SFT PN/N SW	CVT Shift selector	In any position other than P (Park)	OFF
		P (Park)	ON

Is the inspection result normal?

YES >> Refer to GI-50, "Intermittent Incident".
NO-1 >> If DETE/CANCEL SW is incorrect. GO TO 6.
NO-2 >> If SFT PN/N SW is incorrect. GO TO 2.

2.CHECK BCM INPUT SIGNAL

1. Turn ignition switch ON.
2. Check voltage between BCM harness connector and ground.

(+)		(–)	Condition		Voltage (V) (Approx.)
BCM					
Connector	Terminal				
M18	39	Ground	Selector lever	P or N position	12
				Other than above	0

Is the inspection result normal?

YES >> GO TO 4.
NO >> GO TO 3.

3.CHECK BCM INPUT SIGNAL CIRCUIT

1. Turn ignition switch OFF.
2. Disconnect BCM connector.
3. Disconnect transmission range switch connector.
4. Check continuity between transmission range switch harness connector and BCM harness connector.

Transmission range switch		BCM		Continuity
Connector	Terminal	Connector	Terminal	
F29	10	M18	39	Yes

5. Check continuity between transmission range switch harness connector and ground.

Transmission range switch		Ground	Continuity
Connector	Terminal		
F29	10		No

Is the inspection result normal?

YES >> Refer to GI-50, "Intermittent Incident".
NO >> GO TO 5.

4.REPLACE BCM

1. Replace BCM. Refer to BCS-79, "Removal and Installation".
2. Perform initialization of BCM and registration of all Intelligent Keys using CONSULT.

>> Inspection End.

5.CHECK DTC OF TCM

Check DTC in “Self Diagnostic Result” mode of “TCM” using CONSULT.

Is DTC detected?

YES >> Perform the trouble diagnosis related to the detected DTC. Refer to TM-154, "DTC Logic" (RE0F10E) or TM-366, "DTC Logic" (RE0F10J).
NO >> Perform the trouble diagnosis related to the TCM power and ground circuits. Refer to TM-154, "Diagnosis Procedure" (RE0F10E) or TM-366, "Diagnosis Procedure" (RE0F10J).

6.CHECK CVT SHIFT SELECTOR POWER SUPPLY

1. Turn ignition switch OFF.
2. Disconnect CVT shift selector (park position switch) connector.
3. Check voltage between CVT shift selector (park position switch) harness connector and ground.

(+)		(–)	Voltage (V) (Approx.)
CVT shift selector (park position switch)			
Connector	Terminal		
M78	5	Ground	12

Is the inspection result normal?

YES >> GO TO 7.
NO >> Repair or replace harness.

7. CHECK CVT SHIFT SELECTOR POWER SUPPLY CIRCUIT

1. Disconnect BCM connector.
2. Check continuity between CVT shift selector (park position switch) harness connector and BCM harness connector.

CVT shift selector (park position switch)		BCM		Continuity
Connector	Terminal	Connector	Terminal	
M78	5	M19	69	Yes

3. Check continuity between CVT shift selector (park position switch) harness connector and ground.

CVT shift selector (park position switch)		Ground	Continuity
Connector	Terminal		
M78	5		No

Is the inspection result normal?

YES >> GO TO 8.
NO >> Repair or replace harness.

8. CHECK CVT SHIFT SELECTOR CIRCUIT

1. Disconnect BCM connector and IPDM E/R connector.
2. Check continuity between CVT shift selector (park position switch) harness connector and BCM harness connector.

CVT shift selector (park position switch)		BCM		Continuity
Connector	Terminal	Connector	Terminal	
M78	6	M18	20	Yes

3. Check continuity between CVT shift selector (park position switch) harness connector and ground.

CVT shift selector (park position switch)		Ground	Continuity
Connector	Terminal		
M78	6		No

Is the inspection result normal?

YES >> GO TO 9.
NO >> Repair or replace harness.

9. CHECK CVT SHIFT SELECTOR (PARK POSITION SWITCH)

Refer to SEC-124, "Component Inspection".

Is the inspection result normal?

YES >> GO TO 10.
NO >> Replace CVT shift selector. Refer to TM-190, "Removal and Installation" (RE0F10E) or TM-402, "Removal and Installation" (RE0F10J).

10. REPLACE BCM

1. Replace BCM. Refer to BCS-79, "Removal and Installation".
2. Perform initialization of BCM and registration of all Intelligent Keys using CONSULT.

>> Inspection End.

Component Inspection

INFOID:0000000011135343

1.CHECK CVT SHIFT SELECTOR (PARK POSITION SWITCH)

1. Turn ignition switch OFF.
2. Disconnect CVT shift selector connector.
3. Check continuity between CVT shift selector (park position switch) terminals.

CVT shift selector (park position switch)		Condition		Continuity
Terminal				
5	6	Selector lever	P (Park) position	No
			Other than above	Yes

Is the inspection result normal?

YES >> Inspection End.
NO >> Replace CVT shift selector. Refer to TM-190, "Removal and Installation" (RE0F10E) or TM-402, "Removal and Installation" (RE0F10J).

B2604 SHIFT POSITION

DTC Logic

INFOID:0000000011135344

DTC DETECTION LOGIC

NOTE:

- If DTC B2604 is displayed with DTC U1000, first perform the trouble diagnosis for DTC U1000. Refer to BCS-67, "DTC Logic".
- If DTC B2604 is displayed with DTC U1010, first perform the trouble diagnosis for DTC U1010. Refer to BCS-68, "DTC Logic".

DTC No.	Trouble diagnosis name	DTC detecting condition	Possible cause
B2604	PNP/CLUTCH SW	The following states are detected for 5 seconds while ignition switch is ON: • P/N position signal is sent from TCM but shift position signal input (CAN) from TCM is other than P (Park) and N (Neutral) • P/N position signal is not sent from TCM but shift position signal input (CAN) from TCM is P (Park) or N (Neutral)	• Harness or connectors (CAN communication line is open or shorted.) • Harness or connectors (TCM circuit is open or shorted.) • TCM • BCM

DTC CONFIRMATION PROCEDURE

1.PERFORM DTC CONFIRMATION PROCEDURE

1. Shift the selector lever to the P (Park) position.
2. Turn ignition switch ON and wait 5 seconds or more.
3. Shift the selector lever to the N (Neutral) position and wait 5 seconds or more.
4. Shift the selector lever to any position other than P (Park) and N (Neutral) and wait 5 seconds or more.
5. Check DTC in “Self-Diagnostic Result” mode of “BCM” using CONSULT.

Is DTC detected?

YES >> Go to SEC-125, "Diagnosis Procedure".
NO >> Inspection End.

Diagnosis Procedure

INFOID:0000000011135345

Regarding Wiring Diagram information, refer to SEC-27, "Wiring Diagram".

1.CHECK CVT SHIFT SELECTOR SWITCH FUNCTION

1. Turn ignition switch ON.
2. Select “SFT P -MET”, “SFT N -MET” and "SFT PN/N SW" in DATA MONITOR mode with CONSULT.
3. Check “SFT P -MET”, “SFT N -MET” and "SFT PN/N SW" indication under the following conditions.

Monitor item	Condition		Indication
SFT P -MET	CVT Shift selector	Selector lever is in any position except the P (Park) position	OFF
		Selector lever is in the P (Park) position	ON

Monitor item	Condition		Indication
SFT N -MET	CVT Shift selector	Selector lever is in any position except the N (Neutral) position	OFF
		Selector lever is in the N (Neutral) position	ON
SFT PN/N SW	CVT Shift selector	Selector lever is in and position except the P (Park) or N (Neutral) position	OFF
		Selector lever is in the P (Park) or N (Neutral) position	ON

Is the inspection result normal?

YES >> Refer to GI-50, "Intermittent Incident".
NO-1 >> If SFT N -MET or SFT P -MET is incorrect. GO TO 7.
NO-2 >> If SFT PN/N SW is incorrect. GO TO 2.

2.CHECK DTC OF TCM

Check DTC in “Self-Diagnostic Result” mode of “TCM” using CONSULT.

Is DTC detected?

YES >> Perform the trouble diagnosis related to the detected DTC. Refer to TM-154, "DTC Logic" (RE0F10E) or TM-366, "DTC Logic" (RE0F10J).
NO >> GO TO 3.

3.CHECK BCM INPUT SIGNAL

1. Turn ignition switch ON.
2. Check voltage between BCM harness connector and ground.

(+)		(–)	Condition		Voltage (V) (Approx.)
BCM					
Connector	Terminal				
M18	39	Ground	Selector lever	P (Park) or N (Neutral) position	12
				Other than above	0

Is the inspection result normal?

YES >> GO TO 4.
NO >> GO TO 5.

4.REPLACE BCM

1. Replace BCM. Refer to BCS-79, "Removal and Installation".
2. Perform initialization of BCM and registration of all Intelligent Keys using CONSULT.

>> Inspection End.

5.CHECK BCM INPUT SIGNAL CIRCUIT

1. Turn ignition switch OFF.
2. Disconnect transmission range switch connector.
3. Disconnect BCM connector.
4. Check continuity between transmission range switch harness connector and BCM harness connector.

Transmission range switch		BCM		Continuity
Connector	Terminal	Connector	Terminal	
F29	10	M18	39	Yes

5. Check continuity between transmission range switch harness connector and ground.

Transmission range switch		Ground	Continuity
Connector	Terminal		
F29	10		No

Is the inspection result normal?

YES >> GO TO 6.
NO >> Repair or replace harness.

6. CHECK INTERMITTENT INCIDENT

Refer to GI-50, "Intermittent Incident".

>> Inspection End.

7. CHECK CVT SHIFT SELECTOR RANGE SWITCH FUNCTION (METER)

1. Turn ignition switch ON.
2. Select “SHIFT IND" in DATA MONITOR mode (METER) with CONSULT.
3. Check “SHIFT IND" indication under the following conditions.

Monitor item	Condition		Indication
SHIFT IND	CVT Shift selector	P (Park) position	P
		N (Neutral) position	N

Is the inspection result normal?

YES >> Inspection End.
NO >> Refer to TM-111, "Component Inspection" (RE0F10E) or TM-322, "Component Inspection" (RE0F10J).

B2605 SHIFT POSITION

DTC Logic

INFOID:0000000011135346

DTC DETECTION LOGIC

NOTE:

- If DTC B2605 is displayed with DTC U1000, first perform the trouble diagnosis for DTC U1000. Refer to BCS-67, "DTC Logic".
- If DTC B2605 is displayed with DTC U1010, first perform the trouble diagnosis for DTC U1010. Refer to BCS-68, "DTC Logic".

DTC No.	Trouble diagnosis name	DTC detecting condition	Possible cause
B2605	PNP/CLUTCH SW	When ignition switch is ON, P/N position signal input from TCM and P/N position signal (CAN) input from IPDM E/R do not match.	• Harness or connectors (CAN communication line is open or shorted.) • Harness or connectors (TCM circuit is open or shorted.) • IPDM E/R • BCM

DTC CONFIRMATION PROCEDURE

1.PERFORM DTC CONFIRMATION PROCEDURE

1. Shift the selector lever to the P (Park) position.
2. Turn ignition switch ON and wait 1 second or more.
3. Shift the selector lever to the N (Neutral) position and wait 1 second or more.
4. Shift the selector lever to any position other than P (Park) and N (Neutral) and wait 1 second or more.
5. Check DTC in “Self-Diagnostic Result” mode of “BCM” using CONSULT.

Is DTC detected?

YES >> Go to SEC-128, "Diagnosis Procedure".
NO >> Inspection End.

Diagnosis Procedure

INFOID:0000000011135347

Regarding Wiring Diagram information, refer to SEC-27, "Wiring Diagram".

1.CHECK CVT SHIFT SELECTOR SWITCH FUNCTION

1. Turn ignition switch ON.
2. Select “SFT PN-IPDM” and "SFT PN/N SW" in DATA MONITOR mode with CONSULT.
3. Check “SFT PN-IPDM” and "SFT PN/N SW" indication under the following conditions.

Monitor item	Condition		Indication
SFT PN-IPDM	CVT Shift selector	Any position other than P (Park) or N (Neutral) position	OFF
		P (Park) or N (Neutral) position	ON
SFT PN/N SW	CVT Shift selector	Any position other than P (Park) or N (Neutral) position	OFF
		P (Park) or N (Neutral) position	ON

Is the inspection result normal?

YES >> Refer to GI-50, "Intermittent Incident".

NO-1 >> If SFT PN-IPDM is incorrect. GO TO 2.
NO-2 >> If SFT PN/N SW is incorrect. GO TO 5.

2.CHECK IPDM E/R INPUT SIGNAL

1. Turn ignition switch OFF.
2. Disconnect IPDM E/R connector.
3. Turn ignition switch ON.
4. Check voltage between IPDM E/R harness connector and ground.

(+)		(–)	Condition		Voltage (V) (Approx.)
IPDM E/R					
Connector	Terminal				
F24	66	Ground	Selector lever	P (Park) or N (Neutral) position	12
				Other than above	0

Is the inspection result normal?

YES >> Replace IPDM E/R. Refer to PCS-32, "Removal and Installation".
NO >> GO TO 3.

3.CHECK IPDM E/R INPUT SIGNAL CIRCUIT

1. Turn ignition switch OFF.
2. Disconnect BCM connector.
3. Check continuity between IPDM E/R harness connector and transmission range switch harness connector.

IPDM E/R		Transmission range switch		Continuity
Connector	Terminal	Connector	Terminal	
E119	37	F29	10	Yes

4. Check continuity between IPDM E/R harness connector and ground.

IPDM E/R		Ground	Continuity
Connector	Terminal		
E119	37		No

Is the inspection result normal?

YES >> GO TO 4.
NO >> Repair or replace harness.

4.REPLACE IPDM E/R

1. Replace IPDM E/R. Refer to PCS-32, "Removal and Installation".

>> Inspection End.

5.CHECK BCM INPUT SIGNAL

1. Turn ignition switch ON.
2. Check voltage between BCM harness connector and ground.

(+)		(–)	Condition		Voltage (V) (Approx.)
BCM					
Connector	Terminal				
M18	39	Ground	Selector lever	P (Park) or N (Neutral) position	12
				Other than above	0

Is the inspection result normal?

YES >> GO TO 6.

NO >> GO TO 7.

6.REPLACE BCM

1. Replace BCM. Refer to BCS-79, "Removal and Installation".
2. Perform initialization of BCM and registration of all Intelligent Keys using CONSULT.

>> Inspection End.

7.CHECK BCM INPUT SIGNAL CIRCUIT

1. Turn ignition switch OFF.
2. Disconnect transmission range switch connector.
3. Disconnect BCM connector.
4. Check continuity between transmission range switch harness connector and BCM harness connector.

Transmission range switch		BCM		Continuity
Connector	Terminal	Connector	Terminal	
F29	10	M18	39	Yes

5. Check continuity between transmission range switch harness connector and ground.

Transmission range switch		Ground	Continuity
Connector	Terminal		
F29	10		No

Is the inspection result normal?

YES >> GO TO 8.
NO >> Repair or replace harness.

8.CHECK INTERMITTENT INCIDENT

Refer to GI-50, "Intermittent Incident".

>> Inspection End.

B2608 STARTER RELAY

DTC Logic

INFOID:0000000011135348

DTC DETECTION LOGIC

NOTE:

- If DTC B2608 is displayed with DTC U1000, first perform the trouble diagnosis for DTC U1000. Refer to BCS-67, "DTC Logic".
- If DTC B2608 is displayed with DTC U1010, first perform the trouble diagnosis for DTC U1010. Refer to BCS-68, "DTC Logic".

DTC No.	Trouble diagnosis name	DTC detecting condition	Possible cause
B2608	STARTER RELAY	BCM outputs starter motor relay OFF signal but BCM receives starter motor relay ON signal from IPDM E/R (CAN).	• Harness or connectors (CAN communication line is open or shorted.) • Harness or connectors (Starter relay circuit is open or shorted.) • IPDM E/R

DTC CONFIRMATION PROCEDURE

1.PERFORM DTC CONFIRMATION PROCEDURE

1. Press push-button ignition switch under the following conditions to start engine.
- Shift selector lever: In the P (Park) position
- Brake pedal: Depressed
2. Wait 1 second after engine started.
3. Check DTC in “Self-Diagnostic Result” mode of “BCM” using CONSULT.

Is DTC detected?

YES >> Go to SEC-131, "Diagnosis Procedure".
NO >> Inspection End.

Diagnosis Procedure

INFOID:0000000011135349

Regarding Wiring Diagram information, refer to SEC-27, "Wiring Diagram".

1.CHECK DTC OF IPDM E/R

Check DTC in “Self-Diagnostic Result” mode of “IPDM E/R” using CONSULT.

Is DTC detected?

YES >> Perform the trouble diagnosis related to the detected DTC. Refer to PCS-20, "DTC Index".
NO >> GO TO 2.

2.CHECK BCM POWER SUPPLY CIRCUIT

1. Turn ignition switch ON.
2. Check voltage between BCM harness connector and ground.

(+)		(–)	Condition		Voltage (V) (Approx.)
BCM					
Connector	Terminal				
M19	62	Ground	Selector lever	N (Neutral) or P (Park) position	12
				Other than above	0

Is the inspection result normal?

YES >> GO TO 4.
NO >> GO TO 3.

3.CHECK STARTER RELAY CIRCUIT

1. Turn ignition switch OFF.
2. Disconnect IPDM E/R connector.
3. Disconnect BCM connector.
4. Check continuity between IPDM E/R harness connector and BCM harness connector.

IPDM E/R		BCM		Continuity
Connector	Terminal	Connector	Terminal	
E119	33	M19	62	Yes

5. Check continuity between IPDM E/R harness connector and ground.

IPDM E/R		Ground	Continuity
Connector	Terminal		
E119	33		No

Is the inspection result normal?

YES >> Replace IPDM E/R. Refer to PCS-32, "Removal and Installation".
NO >> Repair or replace harness.

4.CHECK INTERMITTENT INCIDENT

Refer to GI-50, "Intermittent Incident".

>> Inspection End.

B2617 STARTER RELAY CIRCUIT

Description

INFOID:0000000011135350

Located in IPDM E/R, it runs the starter motor. The starter relay is turned ON by the BCM when the ignition switch is in START position. IPDM E/R transmits the starter relay ON signal to BCM via CAN communication.

DTC Logic

INFOID:0000000011135351

DTC DETECTION LOGIC

NOTE:

- If DTC B2617 is displayed with DTC U1000, first perform the trouble diagnosis for DTC U1000. Refer to BCS-67, "DTC Logic".
- If DTC B2617 is displayed with DTC U1010, first perform the trouble diagnosis for DTC U1010. Refer to BCS-68, "DTC Logic".

DTC No.	Trouble diagnosis name	DTC detecting condition	Possible cause
B2617	STARTER RELAY CIRCUIT	• An immediate operation of starter relay is requested by BCM, but there is no response for more than 1 second • BCM is not commanding starter relay activation, but BCM detects starter relay output is active	• Harness or connectors (Starter relay circuit is open or shorted.) • IPDM E/R • BCM

DTC CONFIRMATION PROCEDURE

1.PERFORM DTC CONFIRMATION PROCEDURE

1. Turn ignition switch ON under the following conditions and wait for at least 1 second.
- CVT selector lever is in the P (Park) position.
- Do not depress the brake pedal.
2. Check “Self-Diagnostic Result” with CONSULT.

Is DTC detected?

YES >> Refer to SEC-133, "Diagnosis Procedure".
NO >> Inspection End.

Diagnosis Procedure

INFOID:0000000011135352

Regarding Wiring Diagram information, refer to SEC-27, "Wiring Diagram".

1.CHECK STARTER RELAY

1. Turn ignition switch ON.
2. Check voltage between BCM harness connector and ground under the following condition.

BCM		Ground	Condition	Voltage (V)
Connector	Terminal			
M19	62	Ground	Ignition switch cranking	0
			Ignition switch ON (Park or Neutral)	Battery voltage
			Other than above	0

Is the measurement value within the specification.

YES >> GO TO 3.
NO >> GO TO 2.

2.CHECK STARTER RELAY CIRCUIT

1. Turn ignition switch OFF.
2. Disconnect BCM harness connector and IPDM E/R harness connector.
3. Check continuity between IPDM E/R harness connector and BCM harness connector.

IPDM E/R		BCM		Continuity
Connector	Terminal	Connector	Terminal	
E119	33	M19	62	Yes

4. Check continuity between IPDM E/R harness connector and ground.

IPDM E/R		Ground	Continuity
Connector	Terminal		
E119	33	Ground	No

Is the inspection result normal?

YES >> Replace BCM. Refer to BCS-79, "Removal and Installation".
NO >> Repair harness or connector.

3.CHECK INTERMITTENT INCIDENT

Refer to GI-50, "Intermittent Incident".

>> Inspection End.

B261E VEHICLE TYPE

Description

INFOID:0000000011135353

There are two types of vehicles.
- HEV
- Conventional

DTC Logic

INFOID:0000000011135354

DTC DETECTION LOGIC

NOTE:
- If DTC B261E is displayed with DTC U1000, first perform the trouble diagnosis for DTC U1000. Refer to BCS-67, "DTC Logic".
- If DTC B261E is displayed with DTC U1010, first perform the trouble diagnosis for DTC U1010. Refer to BCS-68, "DTC Logic".

DTC No.	Trouble diagnosis name	DTC detecting condition	Possible cause
B261E	VEHICLE TYPE	Difference of BCM configuration.	• BCM mis-configuration • Wrong ECM installed

DTC CONFIRMATION PROCEDURE

1.PERFORM DTC CONFIRMATION PROCEDURE

1. Turn ignition switch ON under the following conditions.
- Shift selector lever is in the P (Park) or N (Neutral) position
- Do not depress brake pedal
2. Check “Self-Diagnostic Result” using CONSULT.

Is DTC detected?

YES >> GO TO SEC-135, "Diagnosis Procedure".
NO >> Inspection End.

Diagnosis Procedure

INFOID:0000000011135355

1.INSPECTION START

1. Turn ignition switch ON.
2. Check “Self-diagnostic result” using CONSULT.
3. Touch “ERASE”.
4. Perform DTC Confirmation Procedure. Refer to SEC-135, "DTC Logic".

Is the 1st trip DTC B261E displayed again?

YES >> GO TO 2.
NO >> Inspection End.

2.PERFORM BCM CONFIGURATION.

Perform the BCM configuration. Refer to BCS-64, "CONFIGURATION (BCM) : Work Procedure".

>> GO TO 3.

3.INSPECTION START

1. Turn ignition switch ON.
2. Check “Self-diagnostic result” using CONSULT.
3. Touch “ERASE”.
4. Perform DTC Confirmation Procedure.
   Refer to SEC-135, "DTC Logic".

Is the 1st trip DTC B261E displayed again?

YES >> GO TO 4.
NO >> Inspection End.

4. CONFIRM ECM PART NUMBER.

Confirm the part number of the installed ECM is correct.

Is the ECM part number correct?

YES >> Replace BCM. Refer to BCS-79, "Removal and Installation".
NO >> Replace ECM. Refer to EC-546, "Removal and Installation" (except for Mexico) or EC-952, "Removal and Installation" (for Mexico).

B26F3 STARTER CONTROL RELAY

DTC Logic

INFOID:0000000011135356

DTC DETECTION LOGIC

NOTE:

- If DTC B26F3 is displayed with DTC U1000, first perform the trouble diagnosis for DTC U1000. Refer to BCS-67, "DTC Logic".
- If DTC B26F3 is displayed with DTC U1010, first perform the trouble diagnosis for DTC U1010. Refer to BCS-68, "DTC Logic".

DTC No.	Trouble diagnosis name	DTC detecting condition	Possible cause
B26F3	START CONT RLY ON	BCM requests IPDM E/R to turn starter control relay OFF, but BCM cannot receive starter control relay OFF state signal from IPDM E/R (CAN).	• Harness or connectors (CAN communication line is open or shorted.) • IPDM E/R

DTC CONFIRMATION PROCEDURE

1.PERFORM DTC CONFIRMATION PROCEDURE

1. Press push-button ignition switch under the following conditions to start engine:
- Shift selector lever: In the P (Park) position
- Brake pedal: Depressed
2. Wait 2 seconds after engine started.
3. Check DTC in “Self-Diagnostic Result” mode of “BCM” using CONSULT.

Is DTC detected?

YES >> GO TO SEC-137, "Diagnosis Procedure".
NO >> Inspection End.

Diagnosis Procedure

INFOID:0000000011135357

1.CHECK DTC OF IPDM E/R

Check DTC in “Self-Diagnostic Result” mode of “IPDM E/R” using CONSULT.

Is DTC detected?

YES >> Perform the diagnosis procedure related to the detected DTC. Refer to PCS-20, "DTC Index".
NO >> GO TO 2.

2.CHECK INTERMITTENT INCIDENT

Refer to GI-50, "Intermittent Incident".

>> Inspection End.

B26F4 STARTER CONTROL RELAY

DTC Logic

INFOID:0000000011135358

DTC DETECTION LOGIC

NOTE:

- If DTC B26F4 is displayed with DTC U1000, first perform the trouble diagnosis for DTC U1000. Refer to BCS-67, "DTC Logic".
- If DTC B26F4 is displayed with DTC U1010, first perform the trouble diagnosis for DTC U1010. Refer to BCS-68, "DTC Logic".

DTC No.	Trouble diagnosis name	DTC detecting condition	Possible cause
B26F4	START CONT RELAY OFF	BCM requests IPDM E/R to turn starter control relay ON, but BCM cannot receive starter control relay ON state signal from IPDM E/R.	• Harness or connectors (CAN communication line is open or shorted.) • IPDM E/R

DTC CONFIRMATION PROCEDURE

1.PERFORM DTC CONFIRMATION PROCEDURE

1. Press push-button ignition switch under the following conditions to start engine, and wait 1 second or more.

- Shift selector lever: In the P (Park) position
- Brake pedal: Depressed

2. Check DTC in “Self-Diagnostic Result” mode of “BCM” using CONSULT.

Is DTC detected?

YES >> GO TO SEC-138, "Diagnosis Procedure".
NO >> Inspection End.

Diagnosis Procedure

INFOID:0000000011135359

1.CHECK DTC OF IPDM E/R

Check DTC in “Self-Diagnostic Result” mode of “IPDM E/R” using CONSULT.

Is DTC detected?

YES >> Perform the diagnosis procedure related to the detected DTC. Refer to PCS-20, "DTC Index".
NO >> GO TO 2.

2.CHECK INTERMITTENT INCIDENT

Refer to GI-50, "Intermittent Incident".

>> Inspection End.

B26F7 BCM

DTC Logic

INFOID:0000000011135360

DTC DETECTION LOGIC

DTC No.	Trouble diagnosis name	DTC detecting condition	Possible cause
B26F7	BCM	Inside key antenna output circuit in BCM is malfunctioning.	BCM

DTC CONFIRMATION PROCEDURE

1.PERFORM DTC CONFIRMATION PROCEDURE

1. Press door request switch.
2. Turn ignition switch ON.
3. Check DTC in “Self-Diagnostic Result” mode of “BCM” using CONSULT.

Is DTC detected?

YES >> GO TO SEC-139, "Diagnosis Procedure".
NO >> Inspection End.

Diagnosis Procedure

INFOID:0000000011135361

1.INSPECTION START

1. Turn ignition switch ON.
2. Select “Self-Diagnostic Result” mode of “BCM” using CONSULT.
3. Touch “ERASE”.
4. Perform DTC CONFIRMATION PROCEDURE for DTC B26F7. Refer to SEC-139, "DTC Logic".

Is DTC detected?

YES >> GO TO 2.
NO >> Inspection End.

2.REPLACE BCM

1. Replace BCM. Refer to BCS-79, "Removal and Installation".
2. Perform initialization of BCM and registration of all Intelligent Keys using CONSULT.

>> Inspection End.

B26F8 BCM

DTC Logic

INFOID:0000000011135362

DTC DETECTION LOGIC

NOTE:
DTC B26F8 can be detected even though the related circuit is not used in this vehicle.

DTC No.	Trouble diagnosis name	DTC detecting condition	Possible cause
B26F8	BCM	Starter control replay control signal and feedback circuit signal (inside BCM) does not match.	BCM

DTC CONFIRMATION PROCEDURE

1.PERFORM DTC CONFIRMATION PROCEDURE

1. Turn ignition switch ON and wait 1 second.
2. Check DTC in “Self-Diagnostic Result” mode of “BCM” using CONSULT.

Is DTC detected?

YES >> GO TO SEC-140, "Diagnosis Procedure".
NO >> Inspection End.

Diagnosis Procedure

INFOID:0000000011135363

1.INSPECTION START

1. Turn ignition switch ON.
2. Select “Self-Diagnostic Result” mode of ”BCM” using CONSULT.
3. Touch “ERASE”.
4. Perform DTC CONFIRMATION PROCEDURE for DTC B26F8.
   Refer to SEC-140, "DTC Logic".

Is DTC detected?

YES >> GO TO 2.
NO >> Inspection End.

2.REPLACE BCM

1. Replace BCM. Refer to BCS-79, "Removal and Installation".
2. Perform initialization of BCM and registration of all Intelligent Keys using CONSULT.

>> Inspection End.

HEADLAMP FUNCTION

Component Function Check

INFOID:0000000011135364

1.CHECK FUNCTION

1. Perform “HEAD LAMP(HI)” in “ACTIVE TEST” mode of “THEFT ALM” of “BCM” using CONSULT.
2. Check headlamps operation.

Test item		Description	
HEAD LAMP (HI)	ON	Headlamps (Hi)	Light
	OFF		Do not light

Is the inspection result normal?

YES >> Inspection End.
NO >> Refer to SEC-141, "Diagnosis Procedure".

Diagnosis Procedure

INFOID:0000000011135365

1.CHECK HEADLAMP FUNCTION

Refer to SEC-141, "Component Function Check".

Is the inspection result normal?

YES >> GO TO 2.
NO >> Repair or replace the malfunctioning parts.

2.CHECK INTERMITTENT INCIDENT

Refer to GI-50, "Intermittent Incident".

>> Inspection End.

HOOD SWITCH

Component Function Check

INFOID:0000000011135366

1.CHECK FUNCTION

1. Select “HOOD SW” in “Data Monitor” mode of “IPDM E/R” using CONSULT.
2. Check “HOOD SW” indication under the following condition.

Monitor item	Condition		Indication
HOOD SW	Hood	Open	ON
		Close	OFF

Is the indication normal?

YES >> Hood switch is OK.
NO >> Go to SEC-142, "Diagnosis Procedure".

Diagnosis Procedure

INFOID:0000000011135367

Regarding Wiring Diagram information, refer to SEC-57, "Wiring Diagram".

1.CHECK HOOD SWITCH SIGNAL CIRCUITS

1. Turn ignition switch OFF.
2. Disconnect hood switch connector.
3. Check voltage between hood switch harness connector and ground.

(+)		(–)	Voltage (V)
Hood switch			
Connector	Terminal		
E205	1	Ground	Battery voltage
	2		

Is the inspection result normal?

YES >> GO TO 3.
NO >> GO TO 2.

2.CHECK HOOD SWITCH SIGNAL CIRCUITS

1. Disconnect IPDM E/R connector.
2. Check continuity between IPDM E/R harness connector and hood switch harness connector.

IPDM E/R		Hood switch		Continuity
Connector	Terminal	Connector	Terminal	
E218	94	E205	1	Yes
	96		2	

3. Check continuity between IPDM E/R harness connector and ground.

IPDM E/R		Ground	Continuity
Connector	Terminal		
E218	94		No
	96		

Is the inspection result normal?

YES >> Replace IPDM E/R. Refer to PCS-32, "Removal and Installation".
NO >> Repair or replace harness.

3.CHECK HOOD SWITCH GROUND CIRCUIT

Check continuity between hood switch harness connector and ground.

Hood switch		Ground	Continuity
Connector	Terminal		
E205	3		Yes

Is the inspection result normal?

YES >> GO TO 4.
NO >> Repair or replace harness.

4.CHECK HOOD SWITCH

Refer to SEC-143, "Component Inspection" .

Is the inspection result normal?

YES >> GO TO 5.
NO >> Replace hood switch. Refer to DLK-293, "HOOD LOCK : Removal and Installation".

5.CHECK INTERMITTENT INCIDENT

Refer to GI-50, "Intermittent Incident".

>> Inspection End.

Component Inspection

INFOID:0000000011135368

1.CHECK HOOD SWITCH

1. Turn ignition switch OFF.
2. Disconnect hood switch connector.
3. Check continuity between hood switch terminals.

Hood switch		Condition		Continuity
Terminal				
1	3	Hood switch	Press	Yes
			Release	No
2			Press	No
			Release	Yes

Is the inspection result normal?

YES >> Inspection End.
NO >> Replace hood switch. Refer to DLK-293, "HOOD LOCK : Removal and Installation".

HORN FUNCTION

Component Function Check

INFOID:0000000011135369

1.CHECK FUNCTION 1

1. Disconnect anti theft horn relay.
2. Perform “VEHICLE SECURITY HORN” in “ACTIVE TEST” mode of “THEFT ALM” of “BCM” using CONSULT.
3. Check the horn operation.

Test item		Description	
VHICLE SECURITY HORN	ON	ANTI-THEFT HORN	Sounds (for 0.5 sec)

Is the operation normal?

YES >> GO TO 2.
NO >> Go to SEC-144, "Diagnosis Procedure".

2.CHECK FUNCTION 2

1. Reconnect anti-theft horn relay.
2. Disconnect horn relay.
3. Perform “VEHICLE SECURITY HORN” in “ACTIVE TEST” mode of “THEFT ALM” of “BCM” using CONSULT.
4. Check the horn operation.

Test item		Description	
VHICLE SECURITY HORN	ON	Anti-theft horn	Sounds (for 0.5 sec)

Is the operation normal?

YES >> Inspection End.
NO >> Go to SEC-144, "Diagnosis Procedure".

Diagnosis Procedure

INFOID:0000000011135370

Regarding Wiring Diagram information, refer to SEC-57, "Wiring Diagram".

1.INSPECTION START

Perform inspection in accordance with procedure that confirms malfunction.

Which procedure confirms malfunction?

Component Function Check 1>>GO TO 2.
Component Function Check 2>>GO TO 4.

2.CHECK HORN FUNCTION

Check that horns function properly using horn switch.

Do horns sound?

YES >> GO TO 3.
NO >> Check horn circuit. Refer to HRN-3, "Wiring Diagram".

3.CHECK HORN CONTROL CIRCUIT

1. Disconnect horn relay.
2. Disconnect IPDM E/R connector.
3. Check continuity between IPDM E/R harness connector and horn relay harness connector.

IPDM E/R		Horn relay		Continuity
Connector	Terminal	Connector	Terminal	
E119	23	H1	1	Yes

4. Check continuity between IPDM E/R harness connector and ground.

IPDM E/R		Ground	Continuity
Connector	Terminal		
E119	23		No

Is the inspection result normal?

YES >> Replace IPDM E/R. Refer to PCS-32, "Removal and Installation".
NO >> Repair or replace harness.

4. CHECK ANTI-THEFT HORN RELAY POWER SUPPLY

1. Disconnect anti-theft horn relay.
2. Check voltage between anti-theft horn relay harness connector and ground.

(+)		(–)	Voltage (V)
Anti-theft horn relay			
Connector	Terminal		
E8	2	Ground	Battery voltage

Is the inspection result normal?

YES >> GO TO 5.
NO-1 >> Check 10 A fuse [No. 57 located in the fuse and fusible link box].
NO-2 >> Check harness for open or short between anti-theft horn relay and fuse.

5. CHECK ANTI THEFT HORN CONTROL CIRCUIT

1. Disconnect IPDM E/R connector.
2. Check continuity between IPDM E/R harness connector and anti-theft horn relay harness connector.

IPDM E/R		Anti theft horn relay		Continuity
Connector	Terminal	Connector	Terminal	
E119	22	E8	1	Yes

3. Check continuity between IPDM E/R harness connector and ground.

IPDM E/R		Ground	Continuity
Connector	Terminal		
E119	22		No

Is the inspection result normal?

YES >> GO TO 6.
NO >> Repair or replace harness.

6. CHECK ANTI-THEFT HORN CIRCUIT

1. Check continuity between anti-theft horn relay harness connector and anti-theft horn harness connector.

Anti-theft horn relay		Anti-theft horn		Continuity
Connector	Terminal	Connector	Terminal	
E8	3	E231	1	Yes

2. Check continuity between anti-theft horn relay harness connector and ground.

Anti-theft horn relay		Ground	Continuity
Connector	Terminal		
E8	3		No

Is the inspection result normal?

YES >> GO TO 7.
NO >> Repair or replace harness.

7.CHECK ANTI-THEFT HORN RELAY

Refer to SEC-146, "Component Inspection".

Is the inspection result normal?

YES >> Replace anti-theft horn.
NO >> Replace anti-theft horn relay.

Component Inspection

INFOID:0000000011135371

1.CHECK ANTI-THEFT HORN RELAY

1. Turn ignition switch OFF.
2. Disconnect anti-theft horn relay.
3. Check voltage between anti theft horn relay terminal and ground under the following conditions.

(+) anti-theft horn relay Terminal	(−)	Condition	Voltage (V) (Approx.)
3	Ground	12 V direct current supply between terminals 1 and 2	12
		No current supply	0

Is the inspection result normal?

YES >> Inspection End.
NO >> Replace anti-theft horn relay.

SECURITY INDICATOR LAMP

Component Function Check

INFOID:0000000011135372

1.CHECK FUNCTION

1. Perform “THEFT IND” in “ACTIVE TEST” mode of “IMMU” of “BCM” using CONSULT.
2. Check security indicator lamp operation.

Test item		Description	
THEFT IND	ON	Security indicator lamp	Illuminates
	OFF		Does not illuminate

Is the inspection result normal?

YES >> Inspection End.
NO >> Go to SEC-147, "Diagnosis Procedure".

Diagnosis Procedure

INFOID:0000000011135373

Regarding Wiring Diagram information, refer to SEC-57, "Wiring Diagram".

1.CHECK SECURITY INDICATOR LAMP POWER SUPPLY CIRCUIT

1. Turn ignition switch OFF.
2. Disconnect combination meter connector.
3. Check voltage between combination meter harness connector and ground.

(+)		(–)	Voltage (V)
Combination meter			
Connector	Terminal		
M24	22	Ground	Battery voltage

Is the inspection result normal?

YES >> GO TO 2.
NO-1 >> Check 10 A fuse [No. 13, located in the fuse block (J/B)].
NO-2 >> Check harness for open or short between combination meter and fuse.

2.CHECK SECURITY INDICATOR LAMP SIGNAL

1. Connect combination meter connector.
2. Disconnect BCM connector.
3. Check voltage between BCM harness connector and ground.

(+)		(–)	Voltage (V)
BCM			
Connector	Terminal		
M18	18	Ground	Battery voltage

Is the inspection result normal?

YES >> GO TO 3.
NO >> GO TO 4.

3.REPLACE BCM

1. Replace BCM. Refer to BCS-79, "Removal and Installation".
2. Perform initialization of BCM and registration of all Intelligent Keys using CONSULT.

>> Inspection End.

4. CHECK SECURITY INDICATOR LAMP CIRCUIT

1. Disconnect combination meter connector.
2. Check continuity between combination meter harness connector and BCM harness connector.

Combination meter		BCM		Continuity
Connector	Terminal	Connector	Terminal	
M24	6	M18	18	Yes

3. Check continuity between combination meter harness connector and ground.

Combination meter		Ground	Continuity
Connector	Terminal		
M24	6		No

Is the inspection result normal?

YES >> Replace combination meter. Refer to MWI-96, "Removal and Installation".
NO >> Repair or replace harness.

SYMPTOM DIAGNOSIS

ENGINE DOES NOT START WHEN INTELLIGENT KEY IS INSIDE OF VEHICLE

Description

INFOID:0000000011135374

Engine does not start when push-button ignition switch is pressed while carrying Intelligent Key.

NOTE:

- Check that vehicle is under the condition shown in “Conditions of vehicle” before starting diagnosis, and check each symptom.
- The engine start function, door lock function, power distribution system, and NATS-IVIS/NVIS in the Intelligent Key system are closely related to each other regarding control. The vehicle security function can operate only when the door lock and power distribution system are operating normally.

Conditions of Vehicle (Operating Conditions)

- “ENGINE START BY I-KEY” in “WORK SUPPORT” is ON when setting on CONSULT.
- One or more of Intelligent Keys with registered Intelligent Key ID is in the vehicle.

Diagnosis Procedure

INFOID:0000000011135375

1.PERFORM WORK SUPPORT

Perform “INSIDE ANT DIAGNOSIS” on Work Support in “INTELLIGENT KEY”.
Refer to BCS-20, "INTELLIGENT KEY : CONSULT Function (BCM - INTELLIGENT KEY)".

>> GO TO 2.

2.PERFORM SELF-DIAGNOSIS RESULT

Perform Self-Diagnosis Result in “BCM”, and check whether or not DTC of inside key antenna is detected.

Is DTC detected?

YES >> Refer to BCS-51, "DTC Index".
NO >> GO TO 3.

3.CHECK PUSH-BUTTON IGNITION SWITCH

Check push-button ignition switch.
Refer to PCS-78, "Component Function Check".

Is the operation normal?

YES >> GO TO 4.
NO >> Repair or replace malfunctioning parts.

4.CONFIRM THE OPERATION

Confirm the operation again.

Is the inspection normal?

YES >> Check intermittent incident. Refer to GI-50, "Intermittent Incident".
NO >> GO TO 1.

SECURITY INDICATOR LAMP DOES NOT TURN ON OR BLINK

Description

INFOID:0000000011135376

Security indicator lamp does not blink when ignition switch is in a position other than ON

NOTE:

- Before performing the diagnosis, check “Work Flow”. Refer to SEC-75, "Work Flow".
- Check that vehicle is under the condition shown in “Conditions of vehicle” before starting diagnosis, and check each symptom.

Conditions of Vehicle (Operating Conditions)

Ignition switch is not in the ON position.

Diagnosis Procedure

INFOID:0000000011135377

1.CHECK SECURITY INDICATOR LAMP

Check security indicator lamp.

Refer to SEC-147, "Component Function Check".

Is the inspection result normal?

YES >> GO TO 2.

NO >> Repair or replace the malfunctioning parts.

2.CONFIRM THE OPERATION

Confirm the operation again.

Is the result normal?

YES >> Check intermittent incident. Refer to GI-50, "Intermittent Incident".

NO >> GO TO 1.

VEHICLE SECURITY SYSTEM CANNOT BE SET

INTELLIGENT KEY

INTELLIGENT KEY : Description

INFOID:0000000011135378

ARMED phase is not activated when door is locked using Intelligent Key.

NOTE:

Check that vehicle is under the condition shown in “Conditions of vehicle” before starting diagnosis and check each symptom.

CONDITION OF VEHICLE (OPERATING CONDITION)

Confirm the setting of “SECURITY ALARM SET” is ON in “WORK SUPPORT” mode of “THEFT ALM” of “BCM” using CONSULT.

INTELLIGENT KEY : Diagnosis Procedure

INFOID:0000000011135379

1.CHECK INTELLIGENT KEY SYSTEM (REMOTE KEYLESS ENTRY FUNCTION)

Lock/unlock door with Intelligent Key.

Refer to DLK-23, "DOOR LOCK FUNCTION : System Description".

Is the inspection result normal?

YES >> GO TO 2.

NO >> Check Intelligent Key system (remote keyless entry function). Refer to DLK-233, "Diagnosis Procedure".

2.CHECK HOOD SWITCH

Check hood swiwtch.

Refer to SEC-142, "Component Function Check" .

Is the inspection result normal?

YES >> GO TO 3.

NO >> Repair or replace hood switch.

3.CONFIRM THE OPERATION

Confirm the operation again.

Is the result normal?

YES >> Check intermittent incident. Refer to GI-50, "Intermittent Incident".

NO >> GO TO 1.

DOOR REQUEST SWITCH

DOOR REQUEST SWITCH : Description

INFOID:0000000011135380

ARMED phase is not activated when door is locked using door request switch.

NOTE:

Check that vehicle is under the condition shown in “Conditions of vehicle” before starting diagnosis, and check each symptom.

CONDITION OF VEHICLE (OPERATING CONDITION)

Confirm the setting of “SECURITY ALARM SET” is ON in “WORK SUPPORT” mode of “THEFT ALM” of “BCM” using CONSULT.

DOOR REQUEST SWITCH : Diagnosis Procedure

INFOID:0000000011135381

1.CHECK INTELLIGENT KEY SYSTEM (DOOR LOCK FUNCTION)

Lock/unlock door with door request switch.

Refer to DLK-23, "DOOR LOCK FUNCTION : System Description".

Is the inspection result normal?

YES >> GO TO 2.

NO >> Check Intelligent Key system (door lock function). Refer to DLK-230, "ALL DOOR REQUEST SWITCHES : Diagnosis Procedure".

2.CHECK HOOD SWITCH

Check hood switch.
Refer to SEC-142, "Component Function Check".

Is the inspection result normal?

YES >> GO TO 3.
NO >> Repair or replace hood switch.

3.CONFIRM THE OPERATION

Confirm the operation again.

Is the result normal?

YES >> Check intermittent incident. Refer to GI-50, "Intermittent Incident".
NO >> GO TO 1.

DOOR KEY CYLINDER

DOOR KEY CYLINDER : Description

INFOID:0000000011135382

ARMED phase is not activated when door is locked using mechanical key.
NOTE:
Check that vehicle is under the condition shown in “Conditions of vehicle” before starting diagnosis, and check each symptom.

CONDITION OF VEHICLE (OPERATING CONDITION)

Confirm the setting of “SECURITY ALARM SET” is ON in “WORK SUPPORT” mode of “THEFT ALM” of “BCM” using CONSULT.

DOOR KEY CYLINDER : Diagnosis Procedure

INFOID:0000000011135383

1.CHECK POWER DOOR LOCK SYSTEM

Lock/unlock door with mechanical key.
Refer to DLK-20, "System Description".

Is the inspection result normal?

YES >> GO TO 2.
NO >> Check power door lock system. Refer to DLK-229, "Diagnosis Procedure".

2.CONFIRM THE OPERATION

Confirm the operation again.

Is the result normal?

YES >> Check intermittent incident. Refer to GI-50, "Intermittent Incident".
NO >> GO TO 1.

VEHICLE SECURITY ALARM DOES NOT ACTIVATE

Description

INFOID:0000000011135384

Alarm does not operate when alarm operating condition is satisfied.

NOTE:

Check that vehicle is under the condition shown in “Conditions of vehicle” before starting diagnosis and check each symptom.

CONDITIONS OF VEHICLE (OPERATING CONDITIONS)

Confirm the setting of “SECURITY ALARM SET” is ON in “WORK SUPPORT” mode of “THEFT ALM” of “BCM” using CONSULT.

Diagnosis Procedure

INFOID:0000000011135385

1.CHECK DOOR SWITCH

Check door switch.

Refer to DLK-171, "Component Function Check".

Is the inspection result normal?

YES >> GO TO 2.

NO >> Replace the malfunctioning door switch.

2.CHECK HOOD SWITCH

Check hood switch.

Refer to SEC-142, "Component Function Check".

Is the inspection result normal?

YES >> GO TO 3.

NO >> Repair or replace hood switch.

3.CHECK HORN FUNCTION

Check horn function.

Refer to SEC-144, "Component Function Check".

Is the inspection result normal?

YES >> GO TO 4.

NO >> Repair or replace the malfunctioning parts.

4.CHECK HEADLAMP FUNCTION

Check headlamp function.

Refer to SEC-141, "Component Function Check".

Is the inspection result normal?

YES >> GO TO 5.

NO >> Repair or replace the malfunctioning parts.

5.CONFIRM THE OPERATION

Confirm the operation again.

Is the result normal?

YES >> Check intermittent incident. Refer to GI-50, "Intermittent Incident".

NO >> GO TO 1.

PANIC ALARM FUNCTION DOES NOT OPERATE

Description

INFOID:0000000011135386

NOTE:
- Before performing the diagnosis following procedure, check “Work Flow”. Refer to SEC-75, "Work Flow".
- Check that vehicle is under the condition shown in “Conditions of vehicle” before starting diagnosis and check each symptom.

CONDITIONS OF VEHICLE (OPERATION CONDITIONS)
- Ignition switch is in OFF or LOCK position.
- Intelligent Key is removed from key slot.

Diagnosis Procedure

INFOID:0000000011135387

1.CHECK REMOTE KEYLESS ENTRY FUNCTION

Check remote keyless entry function.

Does door lock/unlock with Intelligent Key button?

YES >> GO TO 2.
NO >> Go to DLK-233, "Diagnosis Procedure".

2.CHECK VEHICLE SECURITY ALARM OPERATION

Check vehicle security alarm operation.

Does alarm (headlamps and horns) active?

YES >> GO TO 3.
NO >> Go to SEC-14, "VEHICLE SECURITY SYSTEM : System Description".

3.CHECK “PANIC ALARM SET” SETTING IN “WORK SUPPORT”

Check “PANIC ALARM SET” setting in “WORK SUPPORT”.
Refer to BCS-20, "INTELLIGENT KEY : CONSULT Function (BCM - INTELLIGENT KEY)".

Is the inspection result normal?

YES >> GO TO 4.
NO >> Set “PANIC ALARM SET” setting in “WORK SUPPORT”.

4.CONFIRM THE OPERATION

Confirm the operation again.

Is the result normal?

YES >> Check intermittent incident. Refer to GI-50, "Intermittent Incident".
NO >> GO TO 1.

REMOVAL AND INSTALLATION

NATS ANTENNA AMP.

Exploded View

INFOID:0000000011135388

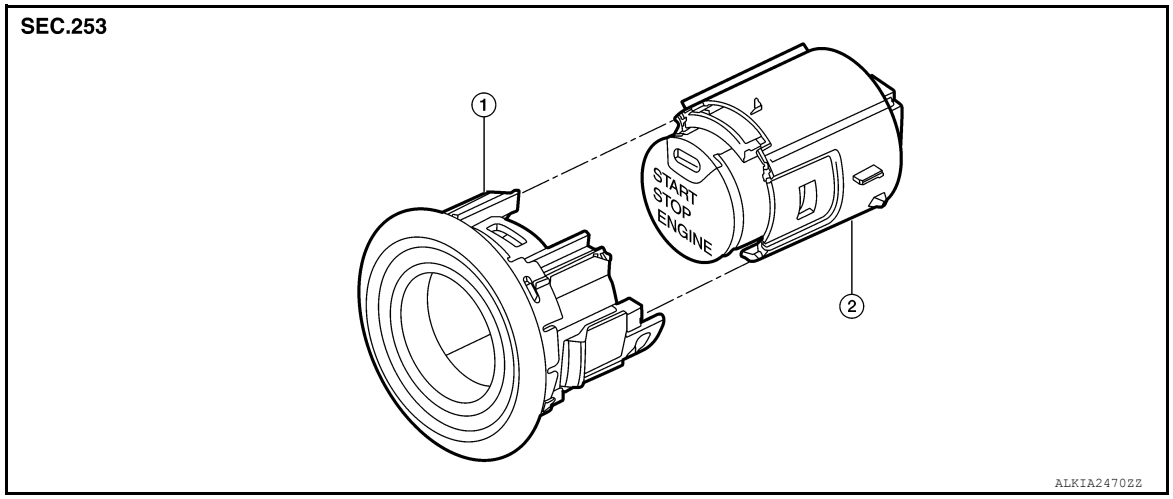

1. NATS antenna amp.
2. Push-button ignition switch

Removal and Installation

INFOID:0000000011135389

REMOVAL

1. Remove the instrument lower panel LH. Refer to IP-25, "Removal and Installation".
2. Release the pawl (➡) on each side of NATS antenna amp (1) and remove from the instrument pad (LH) (2).

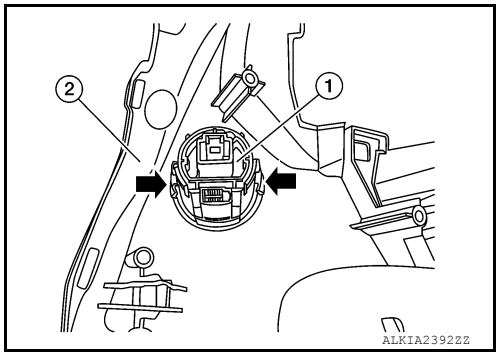

3. Release the pawl on each side and remove the NATS antenna amp from the push-button ignition switch.

INSTALLATION

Installation is in the reverse order of removal.

PUSH-BUTTON IGNITION SWITCH

Exploded View

INFOID:0000000011135390

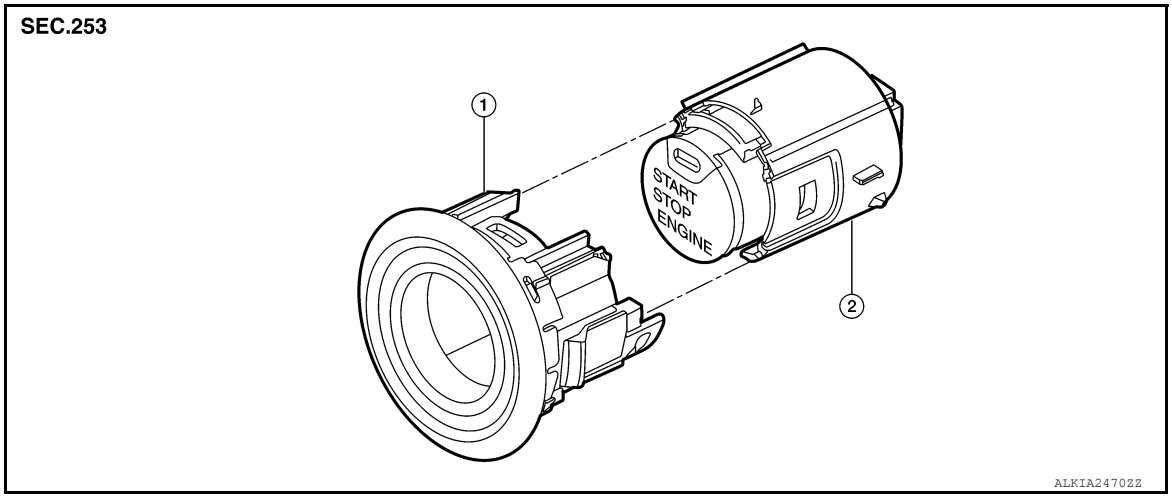

1. NATS antenna amp.
2. Push-button ignition switch

Removal and Installation

INFOID:0000000011135391

REMOVAL

1. Remove the instrument lower panel LH. Refer to IP-25, "Removal and Installation".
2. Release the pawl (➡) on each side of NATS antenna amp (1) and remove from the instrument pad (LH) (2).

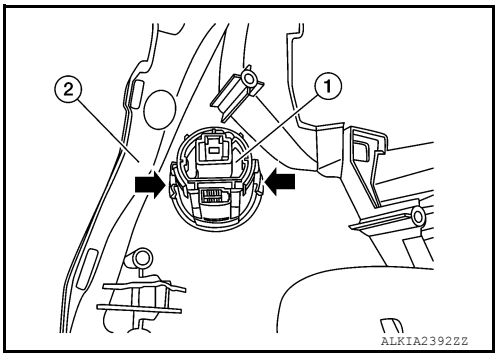

3. Release the pawl on each side and remove the push-button ignition switch from the NATS antenna amp.

INSTALLATION

Installation is in the reverse order of removal.

ANTI-THEFT HORN

Removal and Installation - Anti-Theft

INFOID:0000000011135392

REMOVAL

1. Remove the front combination lamp (RH). Refer to EXL-162, "Removal and Installation".
2. Disconnect the harness connector (A) from anti-theft horn (1).
3. Remove the anti-theft horn bolt (B) and anti-theft horn (1).

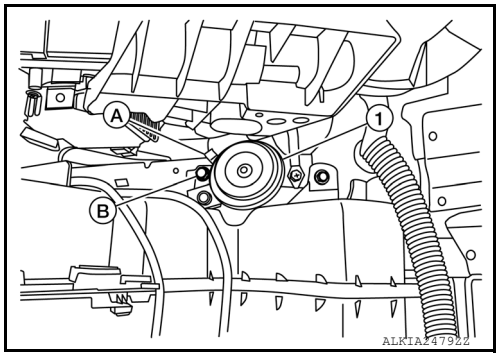

INSTALLATION

Installation is in the reverse order of removal.

IMMOBILIZER CONTROL MODULE

Removal and Installation

INFOID:0000000011135393

The immobilizer control module is integrated into the body control module (BCM). For removal and installation, refer to BCS-79, "Removal and Installation".