SECTION BRC
BRAKE CONTROL SYSTEM

CONTENTS

WITH VDC

PRECAUTION

PRECAUTIONS

Precaution for Supplemental Restraint System (SRS) "AIR BAG" and "SEAT BELT PRE-TENSIONER"

INFOID:0000000009012424

The Supplemental Restraint System such as “AIR BAG” and “SEAT BELT PRE-TENSIONER”, used along with a front seat belt, helps to reduce the risk or severity of injury to the driver and front passenger for certain types of collision. Information necessary to service the system safely is included in the “SRS AIR BAG” and “SEAT BELT” of this Service Manual.

WARNING:

Always observe the following items for preventing accidental activation.

- **To avoid rendering the SRS inoperative, which could increase the risk of personal injury or death in the event of a collision that would result in air bag inflation, all maintenance must be performed by an authorized NISSAN/INFINITI dealer.**
- **Improper maintenance, including incorrect removal and installation of the SRS, can lead to personal injury caused by unintentional activation of the system. For removal of Spiral Cable and Air Bag Module, see “SRS AIR BAG”.**
- **Never use electrical test equipment on any circuit related to the SRS unless instructed to in this Service Manual. SRS wiring harnesses can be identified by yellow and/or orange harnesses or harness connectors.**

PRECAUTIONS WHEN USING POWER TOOLS (AIR OR ELECTRIC) AND HAMMERS

WARNING:

Always observe the following items for preventing accidental activation.

- **When working near the Air Bag Diagnosis Sensor Unit or other Air Bag System sensors with the ignition ON or engine running, never use air or electric power tools or strike near the sensor(s) with a hammer. Heavy vibration could activate the sensor(s) and deploy the air bag(s), possibly causing serious injury.**
- **When using air or electric power tools or hammers, always switch the ignition OFF, disconnect the battery, and wait at least 3 minutes before performing any service.**

Precaution for Procedure without Cowl Top Cover

INFOID:0000000009012425

When performing the procedure after removing cowl top cover, cover the lower end of windshield with urethane, etc to prevent damage to windshield.

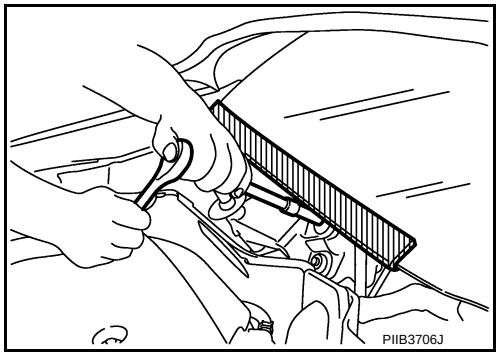

Precautions for Removing of Battery Terminal

INFOID:0000000009863647

- When removing the 12V battery terminal, turn OFF the ignition switch and wait at least 30 seconds.
  NOTE:
  ECU may be active for several tens of seconds after the ignition switch is turned OFF. If the battery terminal is removed before ECU stops, then a DTC detection error or ECU data corruption may occur.
- For vehicles with the 2-batteries, be sure to connect the main battery and the sub battery before turning ON the ignition switch.
  NOTE:

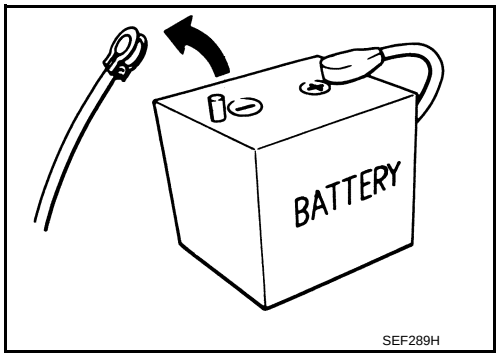

If the ignition switch is turned ON with any one of the terminals of main battery and sub battery disconnected, then DTC may be detected.

- After installing the 12V battery, always check "Self Diagnosis Result" of all ECUs and erase DTC.

NOTE:
The removal of 12V battery may cause a DTC detection error.

Precaution for Brake System

INFOID:0000000009012426

WARNING:
Since dust covering the front and rear brakes has an affect on human body, the dust must be removed with a dust collector. Never splatter the dust with an air blow gun.

- Brake fluid use refer to MA-15, "FOR NORTH AMERICA : Fluids and Lubricants" (for North America), MA-16, "FOR MEXICO : Fluids and Lubricants" (for Mexico).
- Never reuse drained brake fluid.
- Never spill or splash brake fluid on painted surfaces. Brake fluid may seriously damage paint. Wipe it off immediately and wash with water if it gets on a painted surface.
- Always confirm the specified tightening torque when installing the brake pipes.
- After pressing the brake pedal more deeply or harder than normal driving, such as air bleeding, check each item of brake pedal. Adjust brake pedal if it is outside the standard value.
- Never use mineral oils such as gasoline or light oil to clean. They may damage rubber parts and cause improper operation.
- Always loosen the brake tube flare nut with a flare nut wrench.
- Tighten the brake tube flare nut to the specified torque with a crowfoot (A) and torque wrench (B).
- Always connect the battery terminal when moving the vehicle.
- Turn the ignition switch OFF and disconnect the ABS actuator and electric unit (control unit) harness connector or the battery negative terminal before performing the work.
- Check that no brake fluid leakage is present after replacing the parts.

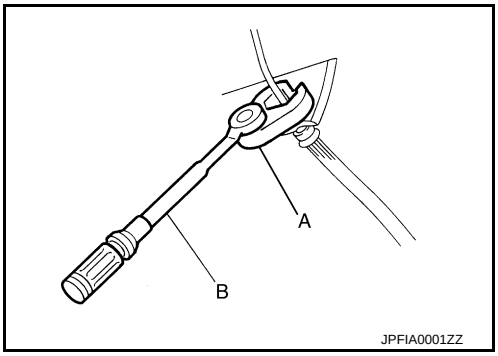

Precaution for Brake Control System

INFOID:0000000009012427

- Slight vibrations are felt on the brake pedal and the operation noises occur, when VDC function, TCS function, ABS function, EBD function, hill start assist function or brake limited slip differential (BLSD) function operates. This is not a malfunction because it is caused by VDC function, TCS function, ABS function, EBD function, hill start assist function or brake limited slip differential (BLSD) function that is normally operated.
- When starting engine or when starting vehicle just after starting engine, brake pedal may vibrate or motor operating noise may be heard from engine compartment. This is normal condition.
- Brake stopping distance may become longer than models without ABS function depending on the road conditions, when ABS function is operated on slippery road like rough road, gravel road or snowy road.
- When a malfunction is indicated, always collect information from the customer about conditions of occurrence, estimate cause and perform operation. Check brake booster operation, brake fluid level and brake fluid leakage, as well as electrical system.
- The optimum performance is achieved by control for VDC function, TCS function, ABS function, EBD function, hill start assist function or brake limited slip differential (BLSD) function when all of brakes, suspensions and tires installed on the vehicle are the specified size and parts. Brake performance and controllability may be negatively affected when other parts than the specified are installed.
- Brake stopping distance may become longer and steering stability may be negatively affected, when tires in different size and combination or other parts than the specified are used.
- When a radio (including wiring), antenna and antenna lead line are located near ABS actuator and electric unit (control unit), a malfunction or improper operation may occur for the control of VDC function, TCS function, ABS function, EBD function, hill start assist function or brake limited slip differential (BLSD) function.
- When the following items are replaced by other parts than genuine parts or modified, ABS warning lamp, brake warning lamp and VDC warning lamp may turn ON, and the control may not operate normally for VDC function, TCS function, ABS function, EBD function, hill start assist function or brake limited slip differential (BLSD) function.
- Suspension component parts (shock absorber, spring, bushing and others)

- Tire and wheel (other than the specified size)
- Brake component parts (brake pad, disc rotor, brake caliper and others)
- Engine component parts (ECM, muffler and others)
- Body reinforcement component parts (rollover bar, tower bar and others)

• When suspension, tire and brake component parts are excessively worn or deteriorated and the vehicle is driven, ABS warning lamp, brake warning lamp and VDC warning lamp may turn ON, and the control may not operate normally for VDC function, TCS function, ABS function, EBD function, hill start assist function or brake limited slip differential (BLSD) function.
• ABS warning lamp, brake warning lamp and VDC warning lamp may turn ON, when only front wheel or rear wheel is rotated using a free roller. This is not a malfunction, because it is caused by wheel speed difference between wheel that is rotated and wheel that is not rotated. In this case, perform self-diagnosis, check self-diagnosis results, and erase memory.
• When power supply voltage is not normal, ABS warning lamp, brake warning lamp and VDC warning lamp turn ON. ABS actuator and electric unit (control unit) stops control for VDC function, TCS function, ABS function, EBD function, hill start assist function or brake limited slip differential (BLSD) function. Ordinary brake operates. After power supply returns to normal, ABS warning lamp, brake warning lamp and VDC warning lamp turn OFF. The control becomes operative for VDC function, TCS function, ABS function, EBD function, hill start assist function or brake limited slip differential (BLSD) function.
• VDC warning lamp may turn ON and VDC function or TCS function may not normally operate, when driving on a special road the is extremely slanted (bank in a circuit course). This is not a malfunction if the status returns to normal for VDC function or TCS function after the engine is started again. In this case, perform self-diagnosis, check self-diagnosis results, and erase memory.
• A malfunction in yaw rate/side/decel G sensor system may be detected when the vehicle sharply turns during a spin turn, acceleration turn or drift driving while VDC function or TCS function are OFF (VDC OFF switch is pressed and VDC OFF indicator lamp is in ON status). This is not a malfunction if the status returns to normal for VDC function or TCS function after the engine is started again. In this case, perform self-diagnosis, check self-diagnosis results, and erase memory

Precaution for Harness Repair

INFOID:0000000009012428

• Solder the repair part, and wrap it with tape. [Twisted wire fray must be 110 mm (4.33 in) or less.]

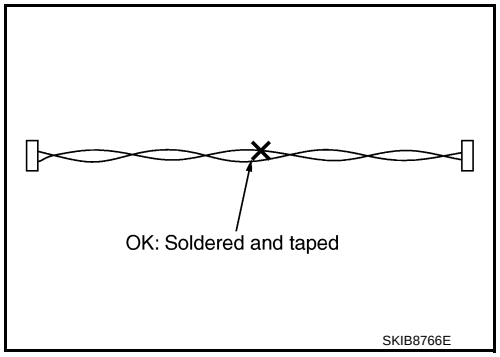

• Never bypass the repair point with wire. (If it is bypassed, the turn-out point cannot be separated and the twisted wire characteristics are lost.)

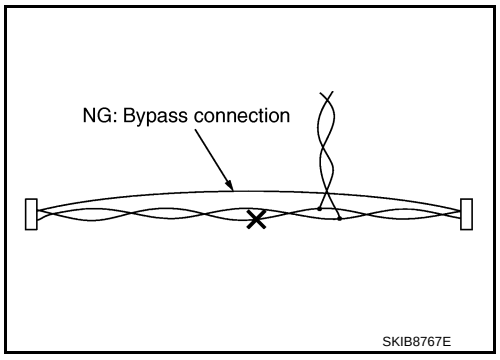

PREPARATION

PREPARATION

Commercial Service Tools

INFOID:0000000009012429

Tool name	Description
Power tool 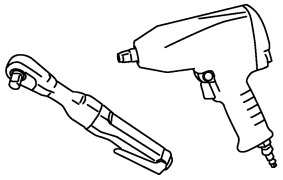 PBIC0190E	Loosening bolts and nuts

SYSTEM DESCRIPTION

COMPONENT PARTS

Component Parts Location

INFOID:0000000009012430

2WD

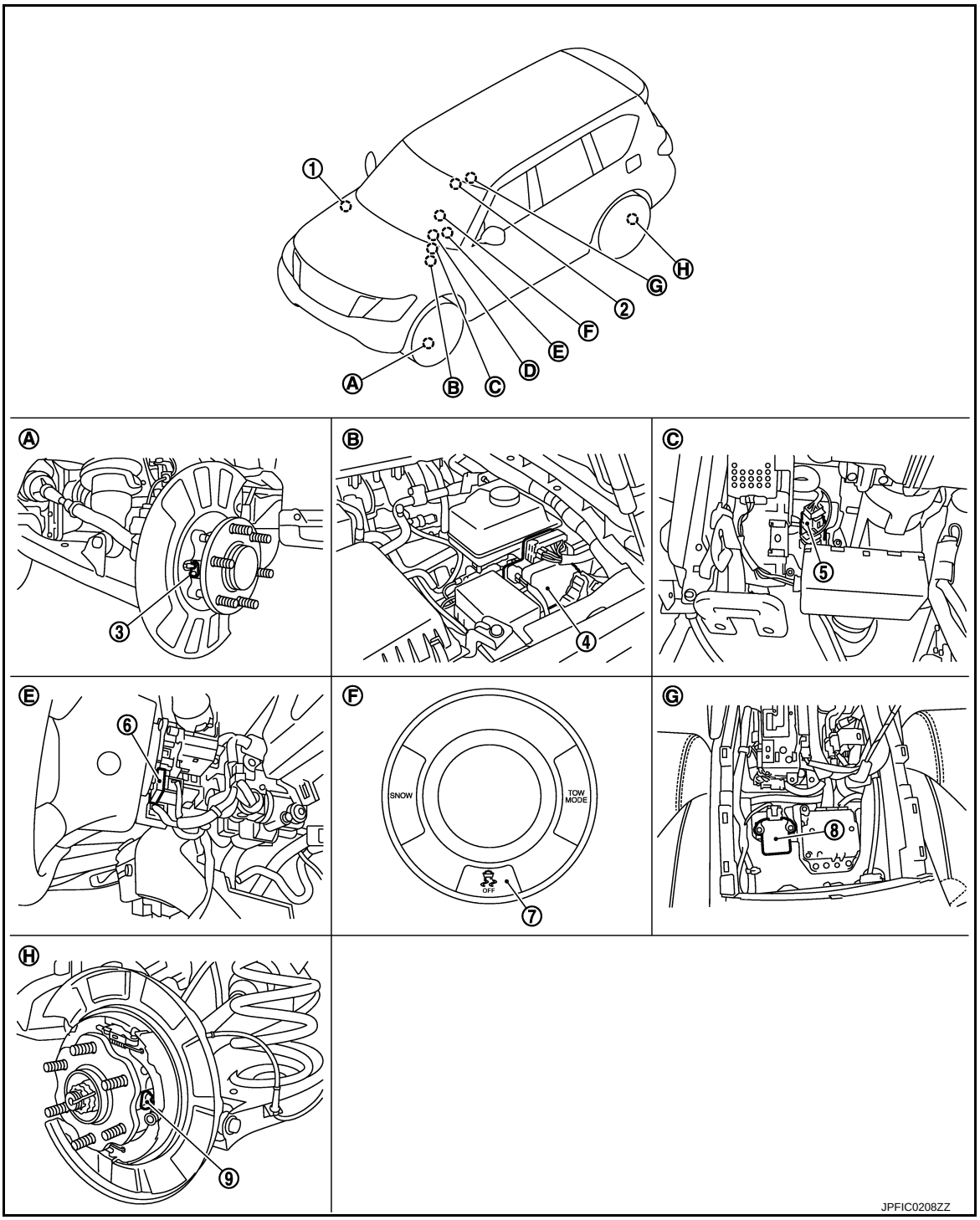

1.	ECM Refer to EC-23, "Component Parts Location".	2.	Control valve & TCM Refer to TM-11, "A/T CONTROL SYSTEM : Component Parts Location".	3.	Front wheel sensor
4.	ABS actuator and electric unit (control unit)	5.	Stop lamp switch	6.	Steering angle sensor
7.	VDC OFF switch	8.	Yaw rate/side/decel G sensor	9.	Rear wheel sensor
A.	Front wheel hub and bearing assembly	B.	Inside engine room	C.	Brake pedal
D.	ABS warning lamp, brake warning lamp, VDC warning lamp, VDC OFF indicator lamp	E.	Back of spiral cable assembly	F.	Center console assembly
G.	Under center console assembly	H.	Rear wheel hub and bearing assembly		

4WD

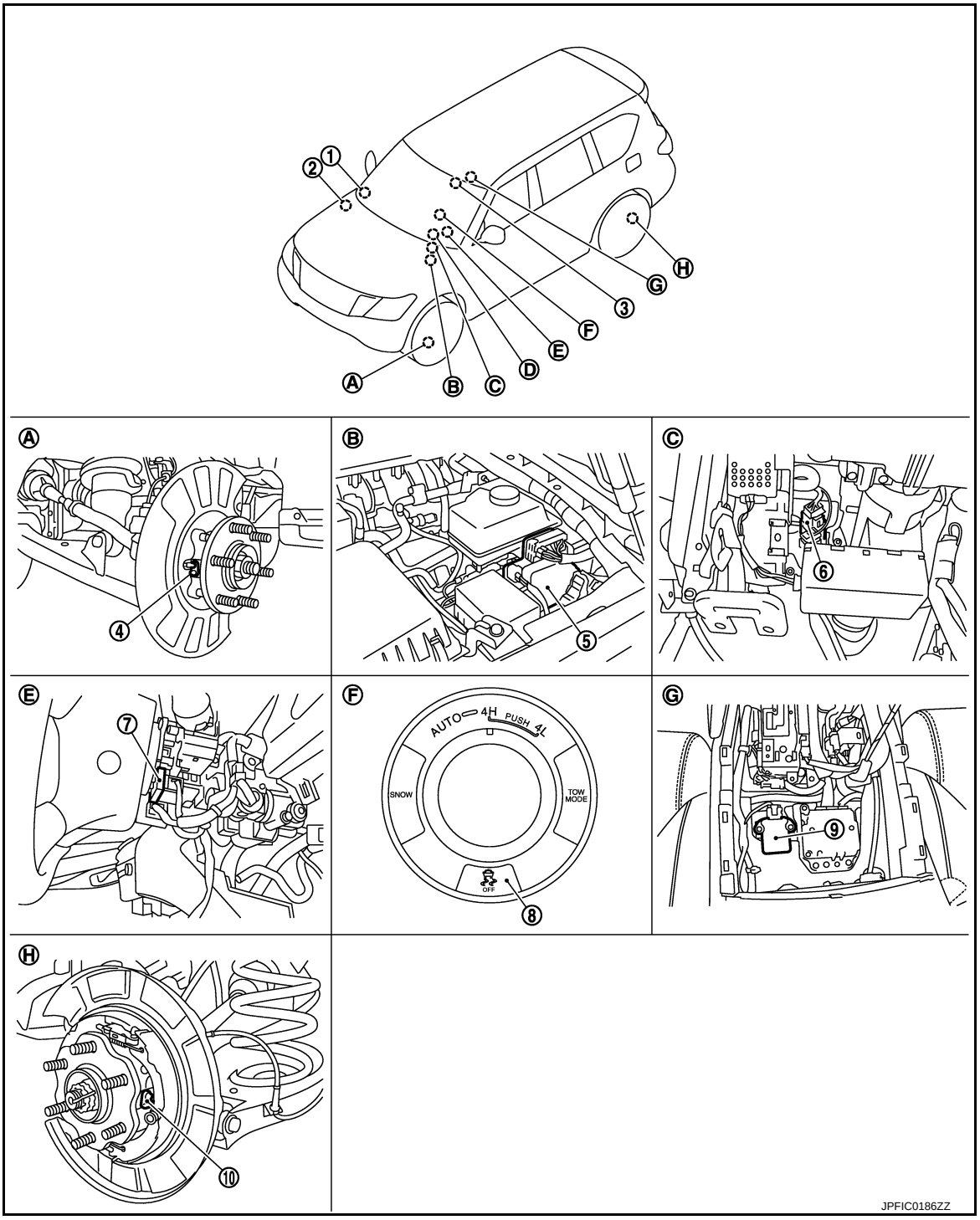

1. Transfer control unit
Refer to DLN-11, "Component Parts Location".
2. ECM
Refer to EC-23, "Component Parts Location" (for USA and Canada), EC-593, "Component Parts Location" (for Mexico).
3. Control valve & TCM
Refer to TM-11, "A/T CONTROL SYSTEM : Component Parts Location".
4. Front wheel sensor
5. ABS actuator and electric unit (control unit)
6. Stop lamp switch
7. Steering angle sensor
8. VDC OFF switch
9. Yaw rate/side/decel G sensor
10. Rear wheel sensor

A. Front wheel hub and bearing assembly
B. Inside engine room
C. Brake pedal

D. ABS warning lamp, brake warning lamp, VDC warning lamp, VDC OFF indicator lamp
E. Back of spiral cable assembly
F. Center console assembly
G. Under center console assembly
H. Rear wheel hub and bearing assembly

Component Description

INFOID:0000000009012431

Component		Reference/Function
ABS actuator and electric unit (control unit)	Motor/accumulator assembly	BRC-13, "ABS Actuator and Electric Unit (Control Unit)"
	Motor relay	
	Actuator relay (main relay)	
	ABS IN valve	
	ABS OUT valve	
	Cut valve 1	
	Cut valve 2	
	Suction valve 1	
	Suction valve 2	
	Control pressure sensor*1	
	Accumulator pressure sensor	
	Master cylinder pressure sensor	
Wheel sensor		BRC-13, "Wheel Sensor and Sensor Rotor"
Stop lamp switch		BRC-14, "Stop Lamp Switch"
Steering angle sensor		BRC-14, "Steering Angle Sensor"
Yaw rate/side/decel G sensor		BRC-14, "Yaw Rate/Side/Decel G sensor"
Brake fluid level switch		BRC-14, "Brake Fluid Level Switch"
Parking brake switch		BRC-14, "Parking Brake Switch"
VDC OFF switch		BRC-14, "VDC OFF Switch"
ECM		Mainly transmits the following signals to ABS actuator and electric unit (control unit) via CAN communication. • Accelerator pedal position signal • Engine speed signal Mainly receives the following signals from ABS actuator and electric unit (control unit) via CAN communication. • Target throttle position signal
TCM		Mainly transmits the following signals to ABS actuator and electric unit (control unit) via CAN communication. • Shift position signal • Current gear position signal
Transfer control unit*2		Mainly transmits the following signals to ABS actuator and electric unit (control unit) via CAN communication. • Current 4WD mode signal
ABS warning lamp		BRC-15, "System Description"
Brake warning lamp		
VDC warning lamp		
VDC OFF indicator lamp		

*1: Models with Advanced Driver Assistance System
*2: Models with 4WD system

ABS Actuator and Electric Unit (Control Unit)

INFOID:0000000009012432

Electric unit (control unit) is integrated with actuator and motor/accumulator assembly and comprehensively controls VDC function, TCS function, ABS function, EBD function, hill start assist function or brake limited slip differential function.

ELECTRIC UNIT (CONTROL UNIT)

- Brake fluid pressure, engine and transmission are controlled according to signals from each sensor.
- If malfunction is detected, the system enters fail-safe mode.

ACTUATOR

The following components are integrated with ABS actuator.

Motor/accumulator Assembly

Pump
- Operates the pump drive according to signals from ABS actuator and electric unit (control unit) by the motor.

Motor
- Operates the motor drive according to signals from ABS actuator and electric unit (control unit).

Accumulator
- The accumulator accumulates brake fluid conveyed by the motor and pump.

Motor Relay
Operates the motor ON/OFF according to signals from ABS actuator and electric unit (control unit).

Actuator Relay (Main Relay)
Operates each valve ON/OFF according to signals from ABS actuator and electric unit (control unit).

ABS IN Valve and ABS OUT Valve
Increases, holds or decreases the fluid pressure of each caliper according to signals from ABS actuator and electric unit (control unit).

Cut Valve 1, Cut Valve 2
Shuts off the ordinary brake line from master cylinder to signals from ABS actuator and electric unit (control unit).

Suction Valve 1
Suction Valve 1 switches the brake path to convey accumulator pressure to the front system, according to a signal transmitted from the ABS actuator and electric unit (control unit).

Suction Valve 2
Suction valve 2 releases accumulator pressure, according to a signal transmitted from the ABS actuator and electric unit (control unit).

Control Pressure Sensor (models with Advanced Driver Assistance System)
Detects the brake fluid pressure of brake caliper side and transmits a signal to ABS actuator and electric unit (control unit).

Accumulator Pressure Sensor
The accumulator pressure sensor detects brake fluid pressure accumulated in the accumulator and conveys the detected result to the ABS actuator and electric unit (control unit).

Master cylinder Pressure Sensor
Detects the brake fluid pressure of master cylinder part and transmits a signal to ABS actuator and electric unit (control unit).

Wheel Sensor and Sensor Rotor

INFOID:0000000009012433

NOTE:
- Wheel sensor and sensor rotor is integrated in wheel hub assembly.
- Never measure resistance and voltage value using a tester because sensor is active sensor.

- Downsize and weight reduction is aimed. IC for detection portion and magnet for sensor rotor are adopted.
- Power supply is supplied to detection portion so that magnetic field line is read. Magnetic field that is detected is converted to current signal.
- When sensor rotor rotates, magnetic field changes. Magnetic field change is converted to current signals (rectangular wave) and is transmitted to ABS actuator and electric unit (control unit). Change of magnetic field is proportional to wheel speed.

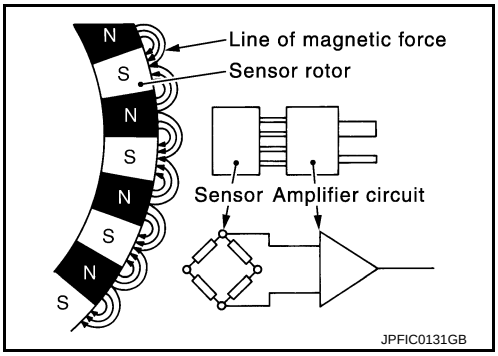

Stop Lamp Switch

INFOID:0000000009012434

Detects the operation status of brake pedal and transmits converted electric signal to ABS actuator and electric unit (control unit).

Steering Angle Sensor

INFOID:0000000009012435

Detects the following information and transmits steering angle signal to ABS actuator and electric unit (control unit) via CAN communication.
- Steering wheel rotation amount
- Steering wheel rotation angular velocity
- Steering wheel rotation direction

Yaw Rate/Side/Decel G sensor

INFOID:0000000009012436

Calculates the following information that affects the vehicle and transmits a signal to ABS actuator and electric unit (control unit) via communication lines.
- Vehicle rotation angular velocity (yaw rate signal)
- Vehicle lateral acceleration (side G signal) / longitudinal acceleration (decel G signal)

Brake Fluid Level Switch

INFOID:0000000009012437

Detects the brake fluid level in reservoir tank and transmits converted electric signal from ABS actuator and electric unit (control unit), when brake fluid level is the specified level or less.

Parking Brake Switch

INFOID:0000000009012438

Detects the operation status of parking brake switch and transmits converted electric signal from combination meter to ABS actuator and electric unit (control unit).

VDC OFF Switch

INFOID:0000000009012439

- VDC OFF switch is integrated in SNOW MODE / TOW MODE / VDC OFF switch assembly (2WD models) or 4WD switch assembly (4WD models).
- The operation of the VDC OFF switch enables the arbitrary switching of the VDC function between stop status and standby status. The status of the function is indicated by the VDC OFF indicator lamp. (ON: Non-operational status, OFF: Standby status)
  - VDC function
    NOTE:
    Brake limited slip differential (BLSD) control operates.
  - TCS function
- VDC OFF indicator lamp turns OFF (standby status) when the engine is started again after it is stopped once while VDC OFF indicator lamp is ON (non-operational status).

SYSTEM

System Description

INFOID:0000000009012440

- The system switches fluid pressure of each brake caliper to increase, to hold or to decrease according to signals from control unit in ABS actuator and electric unit (control unit). This control system is applied to VDC function, TCS function, ABS function, EBD function, hill start assist function and brake limited slip differential (BLSD) function
- Fail-safe function is available for each function and is activated by each function when system malfunction occurs.
- The adoption of the 4WD switch assembly (4WD shift switch and VDC OFF switch) enables to change the control characteristics of the VDC function, the TCS function and the brake limited slip differential (BLSD) function into an optimal characteristics, based on a state of the 4WD shift switch. (Models with 4WD system)

SYSTEM DIAGRAM

NOTE:
Transfer control unit is applied to models with 4WD system.

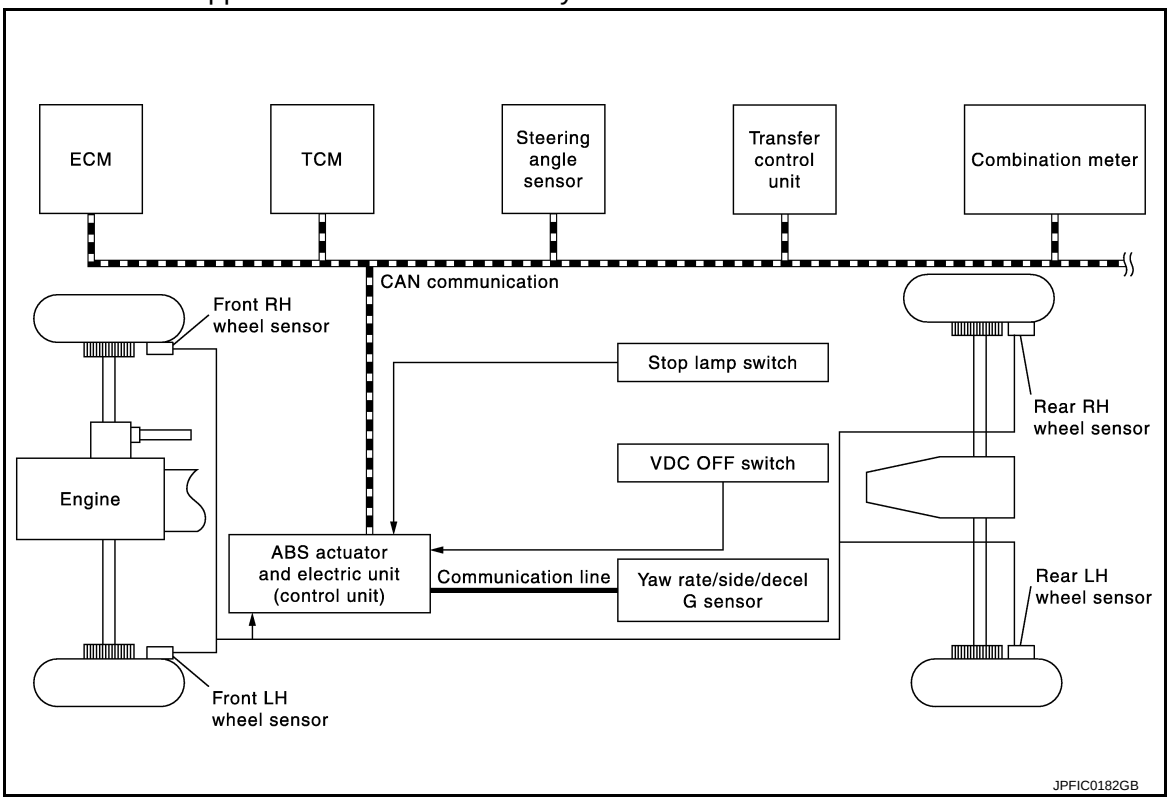

INPUT SIGNAL AND OUTPUT SIGNAL

Major signal transmission between each unit via communication lines is shown in the following table.

Component	Signal description
Yaw rate/side/decel G sensor	Mainly transmits the following signals to ABS actuator and electric unit (control unit) via communication line*1. • Yaw rate signal • Side G sensor signal • Decel G sensor signal
ECM	Mainly transmits the following signals to ABS actuator and electric unit (control unit) via CAN communication. • Accelerator pedal position signal • Engine speed signal Mainly receives the following signals from ABS actuator and electric unit (control unit) via CAN communication. • Target throttle position signal

Component	Signal description
TCM	Mainly transmits the following signals to ABS actuator and electric unit (control unit) via CAN communication. • Shift position signal • Current gear position signal
Transfer control unit*2	Mainly transmits the following signals to ABS actuator and electric unit (control unit) via CAN communication. • Current 4WD mode signal
Steering angle sensor	Mainly transmits the following signals to ABS actuator and electric unit (control unit) via CAN communication. • Steering angle sensor signal
Combination meter	Mainly receives the following signals from ABS actuator and electric unit (control unit) via CAN communication. • ABS warning lamp signal • Brake warning lamp signal • VDC warning lamp signal • VDC OFF indicator lamp

*1: Communication line between yaw rate/side/decal G sensor and ABS actuator and electric unit (control unit)
*2: Models with 4WD system

VALVE OPERATION

Each valve is operated and fluid pressure of brake caliper is controlled.

When Ordinary Brake is Applied

NOTE:

Control pressure sensor is applied to models with Advanced Driver Assistance System.

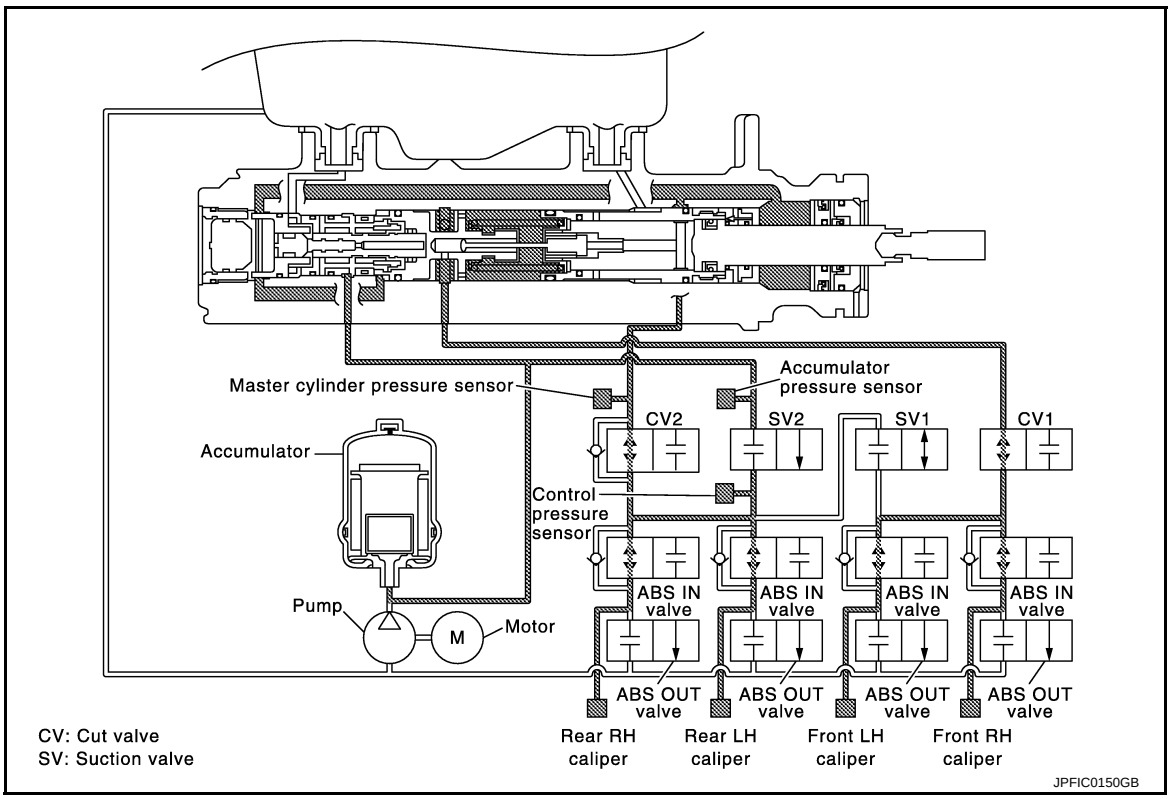

Name	Not activated	When depressing brake pedal
Cut valve 1	Power supply is not supplied (open)	Power supply is not supplied (open)
Cut valve 2	Power supply is not supplied (open)	Power supply is not supplied (open)
Suction valve 1	Power supply is not supplied (close)	Power supply is not supplied (close)
Suction valve 2	Power supply is not supplied (close)	Power supply is not supplied (close)

Name	Not activated	When depressing brake pedal
ABS IN valve	Power supply is not supplied (open)	Power supply is not supplied (open)
ABS OUT valve	Power supply is not supplied (close)	Power supply is not supplied (close)
Each caliper (fluid pressure)	—	Pressure increases

Front RH caliper
- Pressurized brake fluid from accumulator is supplied to front RH caliper through master cylinder part, cut valve 1 and ABS IN valve.

Front LH caliper
- Pressurized brake fluid from accumulator is supplied to front LH caliper through master cylinder part, cut valve 1 and ABS IN valve.

Rear RH caliper
- Pressurized brake fluid from accumulator is supplied to rear RH caliper through master cylinder part, cut valve 2 and ABS IN valve.

Rear LH caliper
- Pressurized brake fluid from accumulator is supplied to rear LH caliper through master cylinder part, cut valve 2 and ABS IN valve.

ABS is Operation (When Pressure Increases)

NOTE:

Control pressure sensor is applied to models with Advanced Driver Assistance System.

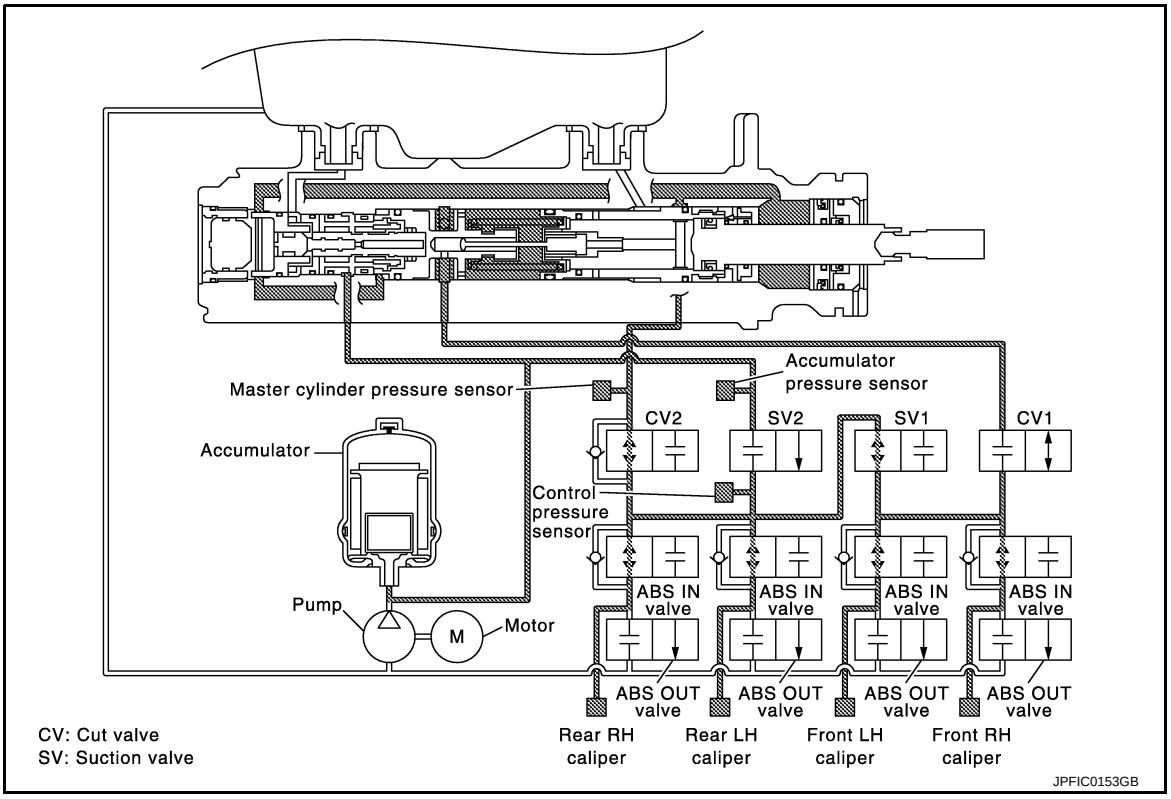

Name	Not activated	When Pressure Increases
Cut valve 1	Power supply is not supplied (open)	Power supply is supplied (close)
Cut valve 2	Power supply is not supplied (open)	Power supply is not supplied (open)
Suction valve 1	Power supply is not supplied (close)	Power supply is supplied (open)
Suction valve 2	Power supply is not supplied (close)	Power supply is not supplied (close)
ABS IN valve	Power supply is not supplied (open)	Power supply is not supplied (open)

Name	Not activated	When Pressure Increases
ABS OUT valve	Power supply is not supplied (close)	Power supply is not supplied (close)
Each caliper (fluid pressure)	—	Pressure increases

Front RH caliper
- Pressurized brake fluid from accumulator is supplied to front RH caliper through master cylinder part, cut valve 2, suction valve 1 and ABS IN valve.

Front LH caliper
- Pressurized brake fluid from accumulator is supplied to front LH caliper through master cylinder part, cut valve 2, suction valve 1 and ABS IN valve.

Rear RH caliper
- Pressurized brake fluid from accumulator is supplied to rear RH caliper through master cylinder part, cut valve 2 and ABS IN valve.

Rear LH caliper
- Pressurized brake fluid from accumulator is supplied to rear LH caliper through master cylinder part, cut valve 2 and ABS IN valve.

ABS is Operation (When Pressure Holds)
NOTE:
Control pressure sensor is applied to models with Advanced Driver Assistance System.

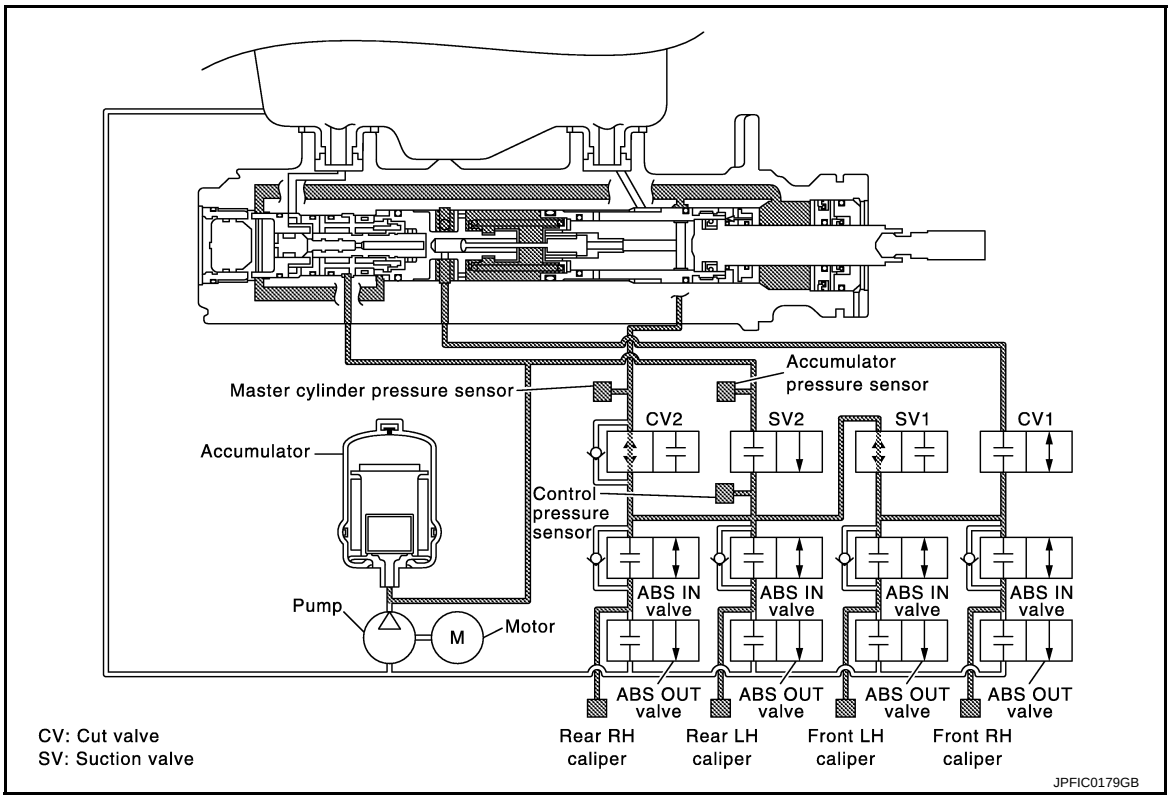

Name	Not activated	When Pressure Increases
Cut valve 1	Power supply is not supplied (open)	Power supply is supplied (close)
Cut valve 2	Power supply is not supplied (open)	Power supply is not supplied (open)
Suction valve 1	Power supply is not supplied (close)	Power supply is supplied (open)
Suction valve 2	Power supply is not supplied (close)	Power supply is not supplied (close)
ABS IN valve	Power supply is not supplied (open)	Power supply is supplied (close)
ABS OUT valve	Power supply is not supplied (close)	Power supply is not supplied (close)
Each caliper (fluid pressure)	—	Pressure holds

Front RH caliper
- ABS IN valve is close, fluid pressure of front RH caliper is holds.

Front LH caliper
- ABS IN valve is close, fluid pressure of front LH caliper is holds.

Rear RH caliper
- ABS IN valve is close and fluid pressure of rear RH caliper is holds.

Rear LH caliper
- ABS IN valve is close and fluid pressure of rear LH caliper is holds.

ABS is Operation (When Pressure Decreases)

NOTE:

Control pressure sensor is applied to models with Advanced Driver Assistance System.

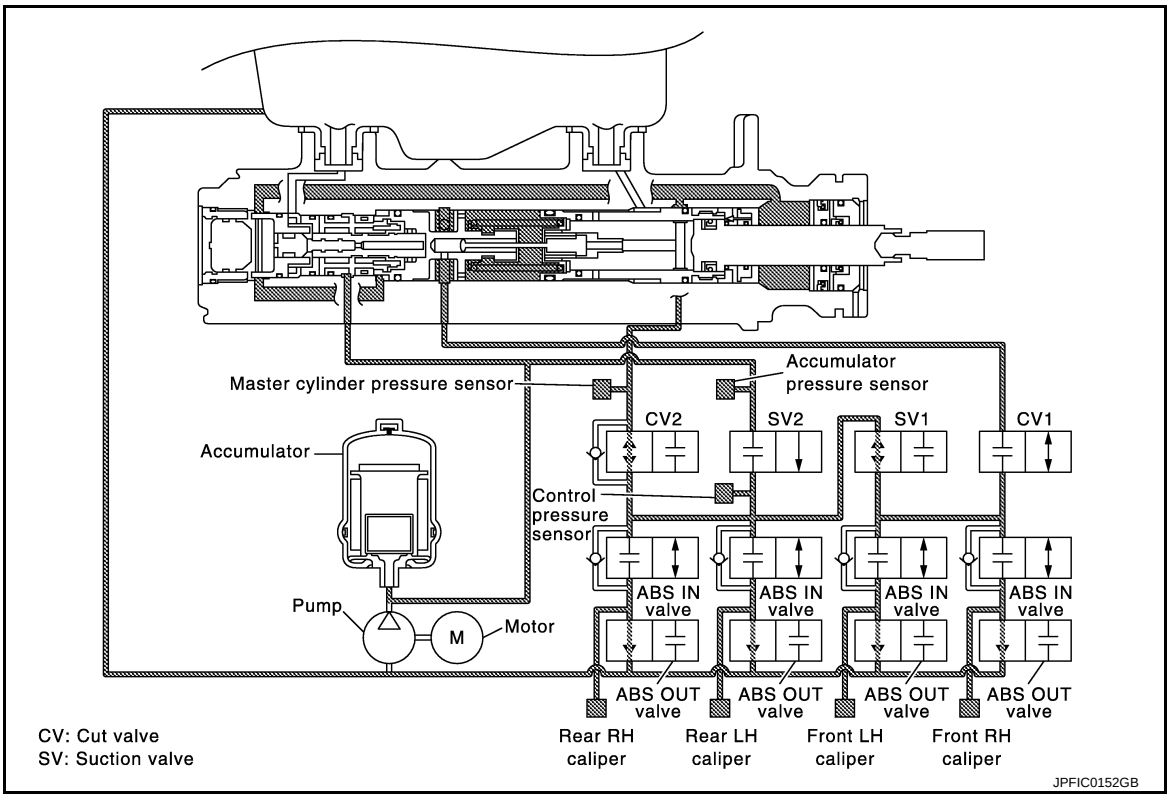

Name	Not activated	When pressure decreases
Cut valve 1	Power supply is not supplied (open)	Power supply is supplied (close)
Cut valve 2	Power supply is not supplied (open)	Power supply is not supplied (open)
Suction valve 1	Power supply is not supplied (close)	Power supply is supplied (open)
Suction valve 2	Power supply is not supplied (close)	Power supply is not supplied (close)
ABS IN valve	Power supply is not supplied (open)	Power supply is supplied (close)
ABS OUT valve	Power supply is not supplied (close)	Power supply is supplied (open)
Each caliper (fluid pressure)	—	Pressure decreases

Front RH caliper
- Being returned to reservoir tank through ABS OUT valve, fluid pressure of front RH caliper is decreased.

Front LH caliper
- Being returned to reservoir tank through ABS OUT valve, fluid pressure of front LH caliper is decreased.

Rear RH caliper
- Being returned to reservoir tank through ABS OUT valve, fluid pressure of rear RH caliper is decreased.

Rear LH caliper

- Being returned to reservoir tank through ABS OUT valve, fluid pressure of rear LH caliper is decreased.

VDC is Operation (When Pressure Increases)
NOTE:
Control pressure sensor is applied to models with Advanced Driver Assistance System.
Example: When other than rear LH wheel is operation in the figure.

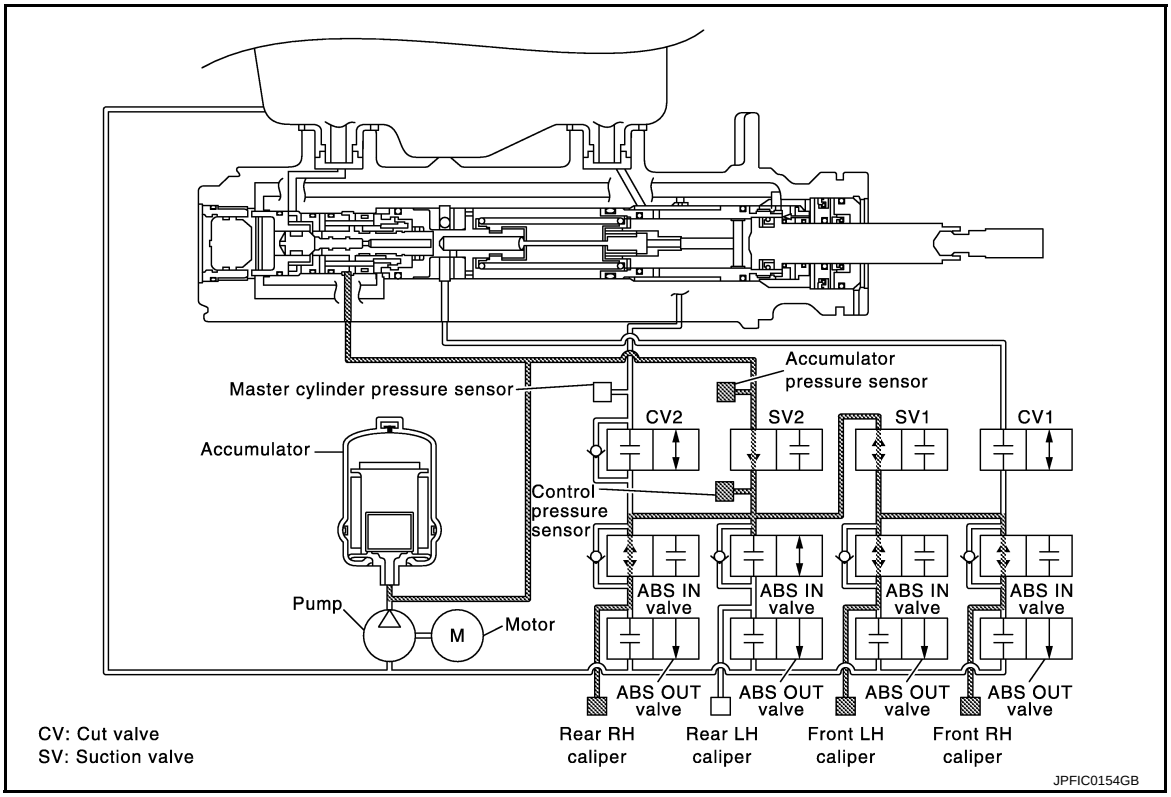

Name	Not activated	When Pressure Increases
Cut valve 1	Power supply is not supplied (open)	Power supply is supplied (close)
Cut valve 2	Power supply is not supplied (open)	Power supply is supplied (close)
Suction valve 1	Power supply is not supplied (close)	Power supply is supplied (open)
Suction valve 2	Power supply is not supplied (close)	Power supply is supplied (open)
ABS IN valve	Power supply is not supplied (open)	Only wheel that the pressure is to be increased: Power supply is not supplied (open) Wheel other than the one that the pressure is to be increased: Power supply is supplied (close)
ABS OUT valve	Power supply is not supplied (close)	Power supply is not supplied (close)
Each caliper (fluid pressure)	—	Pressure increases (only wheel that the pressure is to be increased)

Front RH caliper
- Pressurized brake fluid from accumulator is supplied to front RH caliper through suction valve 2, suction valve 1 and ABS IN valve. When not increases, ABS IN valve is closed and brakes fluid is not supplied to front RH caliper.

Front LH caliper
- Pressurized brake fluid from accumulator is supplied to front LH caliper through suction valve 2, suction valve 1 and ABS IN valve. When not increases, ABS IN valve is closed and brakes fluid is not supplied to front LH caliper.

Rear RH caliper

- Pressurized brake fluid from accumulator is supplied to rear RH caliper through suction valve 2 and ABS IN valve. When not increases, ABS IN valve is closed and brakes fluid is not supplied to rear RH caliper.

Rear LH caliper
- Pressurized brake fluid from accumulator is supplied to rear LH caliper through suction valve 2 and ABS IN valve. When not increases, ABS IN valve is closed and brakes fluid is not supplied to rear LH caliper.

VDC is Operation (When Pressure Holds)

NOTE:
Control pressure sensor is applied to models with Advanced Driver Assistance System.
Example: When other than front LH wheel is operation in the figure.

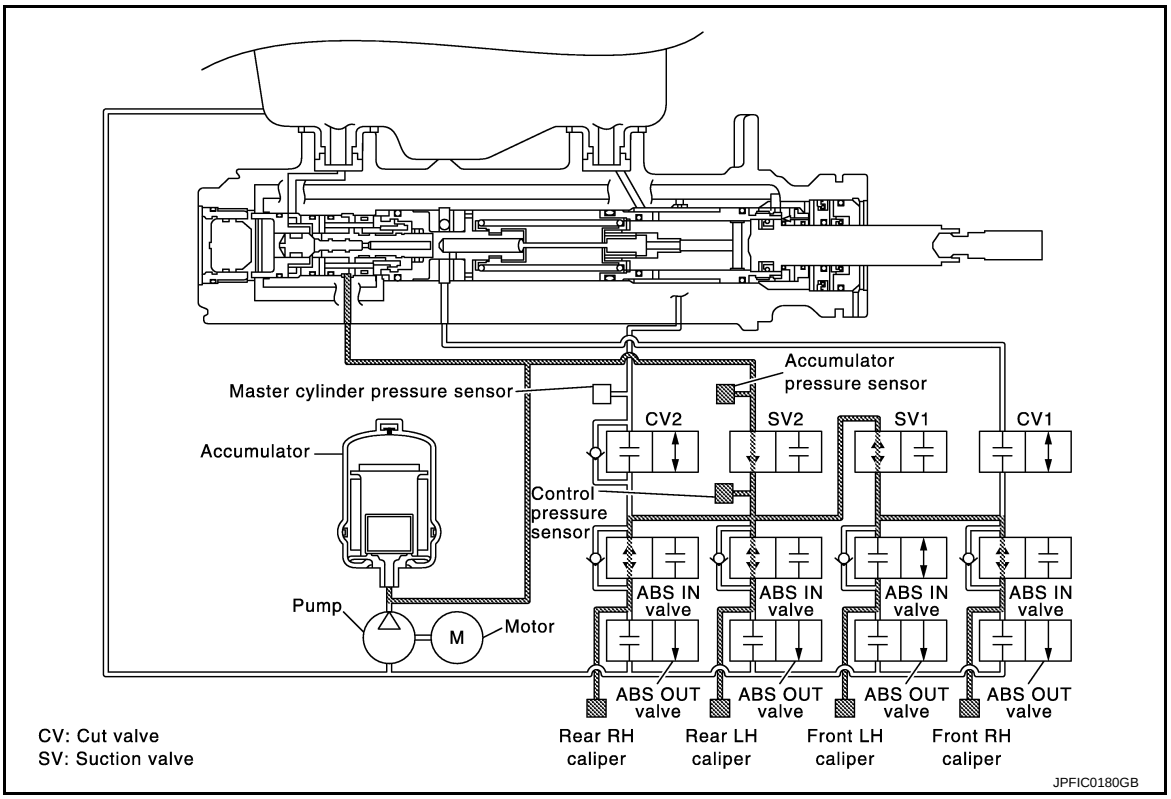

Name	Not activated	When Pressure holds
Cut valve 1	Power supply is not supplied (open)	Power supply is supplied (close)
Cut valve 2	Power supply is not supplied (open)	Power supply is supplied (close)
Suction valve 1	Power supply is not supplied (close)	Power supply is supplied (open)
Suction valve 2	Power supply is not supplied (close)	Power supply is supplied (open)
ABS IN valve	Power supply is not supplied (open)	Only wheel that the pressure is to be holds: Power supply is supplied (close) Wheel other than the one that the pressure is to be holds: Power supply is not supplied (open)
ABS OUT valve	Power supply is not supplied (close)	Power supply is not supplied (close)
Each caliper (fluid pressure)	—	Pressure holds (only wheel that the pressure is to be holds)

Front RH caliper
- ABS IN valve is close, fluid pressure of front RH caliper is holds.

Front LH caliper
- ABS IN valve is close, fluid pressure of front LH caliper is holds.

Rear RH caliper
- ABS IN valve is close, fluid pressure of rear RH caliper is holds.

Rear LH caliper
- ABS IN valve is close, fluid pressure of rear LH caliper is holds.

VDC is Operation (When Pressure Decreases)
NOTE:
Control pressure sensor is applied to models with Advanced Driver Assistance System.
Example: When other than front LH wheel is operation in the figure.

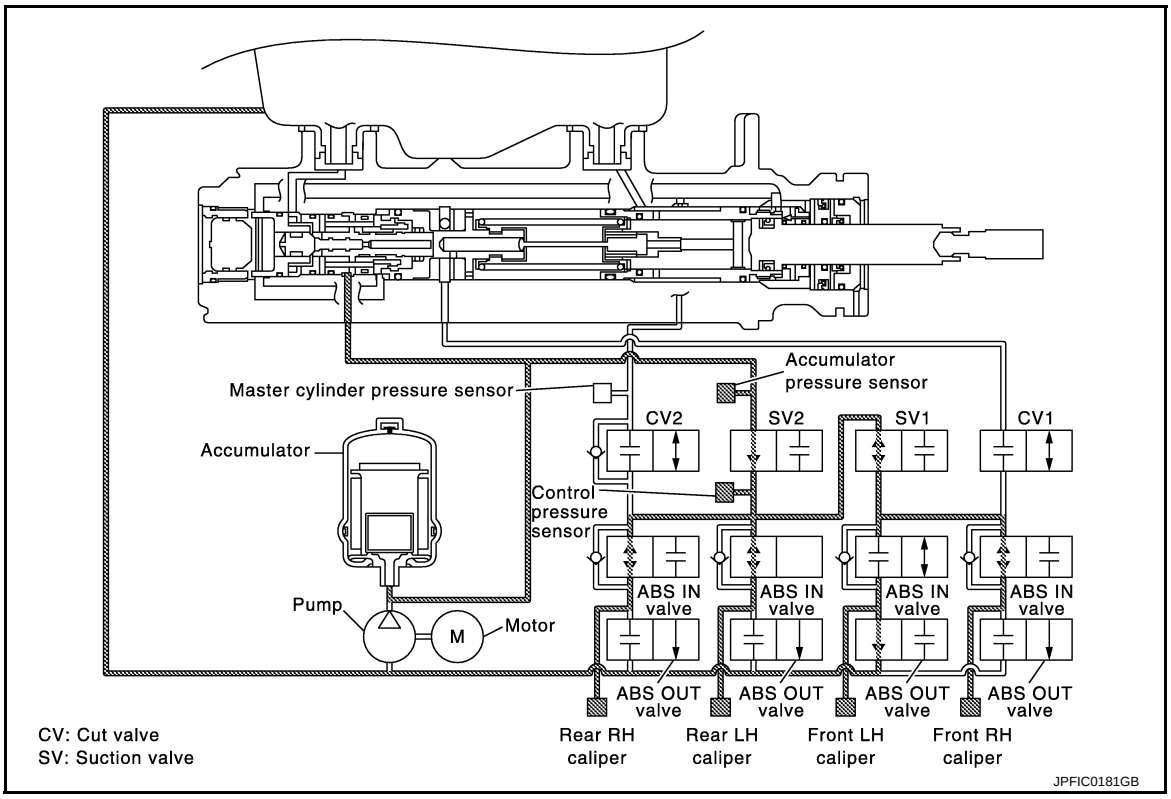

Name	Not activated	When pressure decreases
Cut valve 1	Power supply is not supplied (open)	Power supply is supplied (close)
Cut valve 2	Power supply is not supplied (open)	Power supply is supplied (close)
Suction valve 1	Power supply is not supplied (close)	Power supply is supplied (open)
Suction valve 2	Power supply is not supplied (close)	Power supply is supplied (open)
ABS IN valve	Power supply is not supplied (open)	Only wheel that the pressure is to be decreases: Power supply is supplied (close) Wheel other than the one that the pressure is to be decreases: Power supply is not supplied (open)
ABS OUT valve	Power supply is not supplied (close)	Only wheel that the pressure is to be decreases: Power supply is supplied (open) Wheel other than the one that the pressure is to be decreases: Power supply is not supplied (close)
Each caliper (fluid pressure)	—	Pressure decreases (only wheel that the pressure is to be decreases)

Front RH caliper
- Being returned to reservoir tank through ABS OUT valve, fluid pressure of front RH caliper is decreased.

Front LH caliper
- Being returned to reservoir tank through ABS OUT valve, fluid pressure of front LH caliper is decreased.

Rear RH caliper
- Being returned to reservoir tank through ABS OUT valve, fluid pressure of rear RH caliper is decreased.

Rear LH caliper
- Being returned to reservoir tank through ABS OUT valve, fluid pressure of rear LH caliper is decreased.

Component Parts and Function

Component	Function
Pump	Operates the pump drive according to signals from ABS actuator and electric unit (control unit) by the motor.
Motor	Operates the motor drive according to signals from ABS actuator and electric unit (control unit).
Accumulator	The accumulator accumulates brake fluid conveyed by the motor and pump.
ABS IN valve	Increases, holds or decreases the fluid pressure of each caliper according to signals from ABS actuator and electric unit (control unit).
ABS OUT valve	Increases, holds or decreases the fluid pressure of each caliper according to signals from ABS actuator and electric unit (control unit).
Cut valve 1 Cut valve 2	Shuts off the ordinary brake line from master cylinder to signals from ABS actuator and electric unit (control unit).
Suction valve 1	Suction Valve 1 switches the brake line to convey accumulator pressure to the front system, according to a signal transmitted from the ABS actuator and electric unit (control unit).
Suction valve 2	Suction valve 2 releases accumulator pressure, according to a signal transmitted from the ABS actuator and electric unit (control unit).
Control pressure sensor*	Detects the brake fluid pressure of rear brake caliper and transmits a signal to ABS actuator and electric unit (control unit).
Accumulator pressure sensor	The accumulator pressure sensor detects brake fluid pressure accumulated in the accumulator and conveys the detected result to the ABS actuator and electric unit (control unit).
Master cylinder pressure sensor	Detects the brake fluid pressure of master cylinder part and transmits a signal to ABS actuator and electric unit (control unit).

*: Models with Advanced Driver Assistance System

CONDITION FOR TURN ON THE WARNING LAMP

ABS Warning Lamp
- Turns ON at the same time as VDC warning lamp when either ABS function or EBD function is malfunctioning.
- Turns ON when ignition switch turns ON and turns OFF when the system is normal, for bulb check purposes.

Condition (status)	ABS warning lamp
Ignition switch OFF	OFF
For approx. 1 seconds after the ignition switch is turned ON	ON
Approx. 1 seconds after ignition switch is turned ON (when the system is in normal operation)	OFF
ABS function is malfunctioning	ON
EBD function is malfunctioning	ON

Brake Warning Lamp
- Turns ON at the same time as ABS warning lamp and VDC warning lamp when EBD function, motor/accumulator assembly or motor system is malfunctioning.
- Turns ON when ignition switch turns ON and turns OFF when the system is normal, for bulb check purposes.

Condition (status)	Brake warning lamp
Ignition switch OFF	OFF
For approx. 1 seconds after the ignition switch is turned ON	ON
Approx. 1 seconds after ignition switch is turned ON (when the system is in normal operation)	OFF
After engine starts	OFF
When parking brake operates (parking brake switch ON)	ON

Condition (status)	Brake warning lamp
When brake fluid is less than the specified level (brake fluid level switch ON)	ON
ABS function is malfunctioning	OFF
EBD function is malfunctioning	ON
Accumulator is low pressure	ON
Motor system is malfunctioning	ON
Ignition power supply system is malfunctioning	ON

VDC Warning Lamp
- Turns ON when either VDC function, TCS function, ABS function or EBD function, hill start assist function or brake limited slip differential (BLSD) function is malfunctioning.
- Turns ON when ignition switch turns ON and turns OFF when the system is normal, for bulb check purposes.

Condition (status)	VDC warning lamp
Ignition switch OFF	OFF
For approx. 1 seconds after the ignition switch is turned ON	ON
Approx. 1 seconds after ignition switch is turned ON (when the system is in normal operation)	OFF
VDC function is malfunctioning	ON
TCS function is malfunctioning	ON
ABS function is malfunctioning	ON
EBD function is malfunctioning	ON
hill start assist function is malfunctioning	ON
Brake limited slip differential (BLSD) function is malfunctioning	ON
VDC function is operating	Blinking
TCS function is operating	Blinking

CONDITION FOR TURN ON THE INDICATOR LAMP

VDC OFF Indicator Lamp
- Turns ON when VDC function and TCS function are switched to non-operational status (OFF) by VDC OFF switch.
- Turns ON when ignition switch turns ON and turns OFF when the system is normal, for bulb check purposes.

Condition (status)	VDC OFF indicator lamp
Ignition switch OFF	OFF
For approx. 1 seconds after the ignition switch is turned ON	ON
Approx. 1 seconds after ignition switch is turned ON (when the system is in normal operation)	OFF
When VDC OFF switch is ON (VDC function and TCS function are OFF)	ON
4WD mode: 4L*	ON

*: Models with 4WD system

Fail-safe

INFOID:0000000009012441

VDC FUNCTION, TCS FUNCTION, hill start assist FUNCTION AND BRAKE LIMITED SLIP DIFFERENTIAL (BLSD) FUNCTION

VDC warning lamp in combination meter turn ON when a malfunction occurs in system [ABS actuator and electric unit (control unit)]. The control is suspended for VDC function, TCS function, hill start assist function and brake limited slip differential (BLSD) function. The Vehicle status becomes the same as models without VDC function, TCS function, hill start assist function and brake limited slip differential (BLSD) function. However, ABS function and EBD function are operated normally.

ABS FUNCTION

ABS warning lamp and VDC warning lamp in combination meter turn ON when a malfunction occurs in system [ABS actuator and electric unit (control unit)]. The control is suspended for VDC function, TCS function, ABS function, hill start assist function and brake limited slip differential (BLSD) function. The vehicle status becomes the same as models without VDC function, TCS function, ABS function, hill start assist function and brake limited slip differential (BLSD) function. However, EBD function is operated normally.

NOTE:

ABS self-diagnosis sound may be heard the same as in the normal condition, because self-diagnosis is performed when ignition switch turns ON and when vehicle initially starts.

EBD FUNCTION

ABS warning lamp, brake warning lamp and VDC warning lamp in combination meter turn ON when a malfunction occurs in system [ABS actuator and electric unit (control unit)]. The control is suspended for VDC function, TCS function, ABS function, EBD function, hill start assist function and brake limited slip differential (BLSD) function. The vehicle status becomes the same as models without VDC function, TCS function, ABS function, EBD function, hill start assist function and brake limited slip differential (BLSD) function.

DTC	Malfunction detected condition	Fail-safe condition
C1101	When an open circuit is detected in rear RH wheel sensor circuit.	The following functions are suspended. • VDC function • TCS function • ABS function • EBD function (only when both 2 rear wheels are malfunctioning) • hill start assist function • Brake limited slip differential (BLSD) function
C1102	When an open circuit is detected in rear LH wheel sensor circuit.	
C1103	When an open circuit is detected in front RH wheel sensor circuit.	
C1104	When an open circuit is detected in front LH wheel sensor circuit.	
C1105	• When power supply voltage of rear RH wheel sensor is low. • When distance between rear RH wheel sensor and rear RH wheel sensor rotor is large. • When installation of rear RH wheel sensor or rear RH wheel sensor rotor is not normal.	
C1106	• When power supply voltage of rear LH wheel sensor is low. • When distance between rear LH wheel sensor and rear LH wheel sensor rotor is large. • When installation of rear LH wheel sensor or rear LH wheel sensor rotor is not normal.	
C1107	• When power supply voltage of front RH wheel sensor is low. • When distance between front RH wheel sensor and front RH wheel sensor rotor is large. • When installation of front RH wheel sensor or front RH wheel sensor rotor is not normal.	
C1108	• When power supply voltage of front LH wheel sensor is low. • When distance between front LH wheel sensor and front LH wheel sensor rotor is large. • When installation of front LH wheel sensor or front LH wheel sensor rotor is not normal.	
C1109	• When ignition voltage is 10 V or less. • When ignition voltage is 16 V or more.	The following functions are suspended. • VDC function • TCS function • ABS function • EBD function • hill start assist function • Brake limited slip differential (BLSD) function
C1111	• When a malfunction is detected in motor or motor relay. • When a low pressure malfunction is detected in accumulator. • When a malfunction is detected in accumulator pressure sensor.	
C1115	When difference in wheel speed between any wheel and others is detected during the vehicle is driven, because of installation of other tires than specified.	The following functions are suspended. • VDC function • TCS function • ABS function • hill start assist function • Brake limited slip differential (BLSD) function
C1116	• When stop lamp switch signal is not input when brake pedal depress. • When stop lamp switch signal is not input when stop lamp relay operates.	
C1118*1	When a malfunction is detected in transfer control unit system.	

DTC	Malfunction detected condition	Fail-safe condition
C1120	When a malfunction is detected in front LH ABS IN valve.	The following functions are suspended. • VDC function • TCS function • ABS function • EBD function • hill start assist function • Brake limited slip differential (BLSD) function
C1121	When a malfunction is detected in front LH ABS OUT valve.	
C1122	When a malfunction is detected in front RH ABS IN valve.	
C1123	When a malfunction is detected in front RH ABS OUT valve.	
C1124	When a malfunction is detected in rear LH ABS IN valve.	
C1125	When a malfunction is detected in rear LH ABS OUT valve.	
C1126	When a malfunction is detected in rear RH ABS IN valve.	
C1127	When a malfunction is detected in rear RH ABS OUT valve.	
C1130	When a malfunction is detected in ECM system.	The following functions are suspended. • VDC function • TCS function • hill start assist function • Brake limited slip differential (BLSD) function
C1140	When a malfunction is detected in actuator relay.	The following functions are suspended. • VDC function • TCS function • ABS function • EBD function • hill start assist function • Brake limited slip differential (BLSD) function
C1142*2	When a malfunction is detected in master cylinder pressure sensor or control pressure sensor.	The following functions are suspended. • VDC function • TCS function • hill start assist function • Brake limited slip differential (BLSD) function
C1143	When a malfunction is detected in steering angle sensor.	
C1144	When neutral position adjustment of steering angle sensor is not complete.	
C1145	• When a malfunction is detected in yaw rate signal. • When yaw rate signal is not continuously received for 2 seconds or more.	
	• When side G signal is not continuously received for 2 seconds or more. • When decel G signal is not continuously received for 2 seconds or more.	The following functions are suspended. • VDC function • TCS function • ABS function • hill start assist function • Brake limited slip differential (BLSD) function
C1146	When a malfunction is detected in side/decel G signal.	
C1155	• When brake fluid level low signal is detected. • When an open circuit is detected in brake fluid level switch circuit.	
C1160	When calibration of yaw rate/side/decal G sensor is not complete.	
C1164	When a malfunction is detected in cut valve 1.	The following functions are suspended. • VDC function • TCS function • ABS function • EBD function • hill start assist function • Brake limited slip differential (BLSD) function
C1165	When a malfunction is detected in cut valve 2.	
C1166	When a malfunction is detected in suction valve 1.	
C1167	When a malfunction is detected in suction valve 2.	
C1170	When the information in ABS actuator and electric unit (control unit) is not the same.	The following functions are suspended. • VDC function • TCS function • ABS function • hill start assist function • Brake limited slip differential (BLSD) function

DTC	Malfunction detected condition	Fail-safe condition
C118E	When performing excessive brake pedal operation with the vehicle stopped. [When accumulator fluid pressure reaches 11.43 MPa (114 bar, 116.6 kg/cm^2, 1657 psi) after reaching 17.3 MPa (173 bar, 176.5 kg/cm^2, 2509 psi.]	The following functions are suspended. • VDC function • TCS function • ABS function • EBD function • hill start assist function • Brake limited slip differential (BLSD) function
U1000	When CAN communication signal is not continuously received for 2 seconds or more.	The following functions are suspended. • VDC function • TCS function • ABS function • hill start assist function • Brake limited slip differential (BLSD) function

*1: Models with 4WD System
*2: Models with Advanced Driver Assistance System

Protection Function

INFOID:0000000009012442

The VDC warning lamp, ABS warning lamp and brake warning lamp turns ON and DTC “C118E” may be detected in self-diagnosis result of “ABS” when the brake pedal is excessively operated, such as air bleeding. This is not a system malfunction because this occurs due to the temporary decrease in accumulator fluid pressure. The system returns to normal condition when the accumulator fluid pressure reaches the specified pressure with the ignition switch ON and the VDC warning lamp, ABS warning lamp, and brake warning lamp turn OFF. After these steps, erase self-diagnosis results for “ABS” with CONSULT.

DTC	• VDC warning lamp • ABS warning lamp • Brake warning lamp	Condition	Description protection function
C118E	ON	When temporary decrease in accumulator fluid pressure. **NOTE:** System is not malfunction.	The following functions are suspended temporarily • VDC function • TCS function • ABS function • EBD function • hill start assist function • Brake limited slip differential (BLSD) function

NOTE:
DTC “C1111” is detected in self-diagnosis results of “ABS” when the accumulator system has a malfunction.

VDC FUNCTION

VDC FUNCTION : System Description

INFOID:0000000009012443

- Side slip or tail slip may occur while driving on a slippery road or intending an urgent evasive driving. VDC function detects side slip status using each sensor when side slip or tail slip is about to occur and improves vehicle stability by brake control and engine output control during driving.
- In addition to ABS function, EBD function and TCS function, target side slip amount is calculated according to steering operation amount from steering angle sensor and brake operation amount from pressure sensor. By comparing this information with vehicle side slip amount that is calculated from information from yaw rate/

side/decel G- sensor and wheel sensor, vehicle driving conditions (conditions of understeer or oversteer) are judged and vehicle stability is improved by brake force control on all 4 wheels and engine output control.

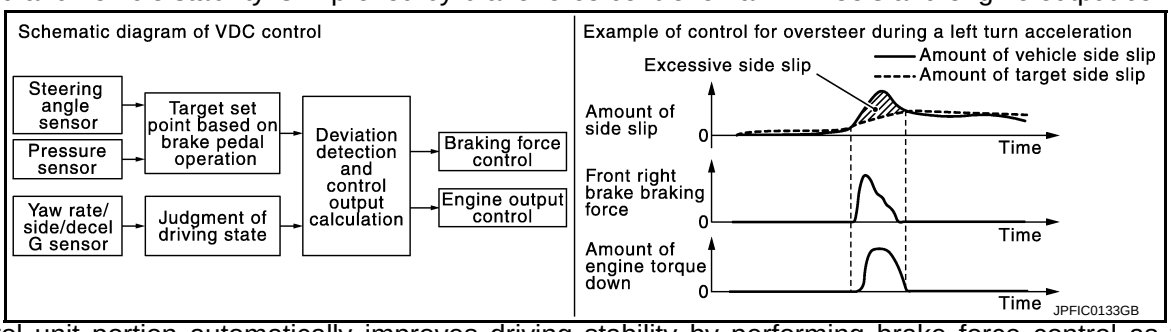

- Control unit portion automatically improves driving stability by performing brake force control as well as engine output control, by transmitting drive signal to actuator portion according to difference between target side slip amount and vehicle side slip amount
- VDC function can be switched to non-operational status (OFF) by operating VDC OFF switch. In this case, VDC OFF indicator lamp turns ON.
- VDC function is not operate when 4WD mode is “4L”. (Models with 4WD system)
- VDC warning lamp blinking while VDC function is in operation and indicates to the driver that the function is in operation.
- Slight vibrations are felt on the brake pedal and the operation noises occur, when VDC function operates. This is not a malfunction because it is caused by VDC function that is normally operated.
- CONSULT can be used to diagnose the system diagnosis.
- Fail-safe function is adopted. When a malfunction occurs in VDC function, the control is suspended for VDC function, TCS function, hill start assist function and brake limited slip differential (BLSD) function. The vehicle status becomes the same as models without VDC function, TCS function, hill start assist function and brake limited slip differential (BLSD) function. However, ABS function and EBD function are operated normally. Refer to BRC-24, "Fail-safe".

NOTE:
VDC has the characteristic as described here, but it is not the device that helps reckless driving.

SYSTEM DIAGRAM

NOTE:
Transfer control unit is applied to models with 4WD system.

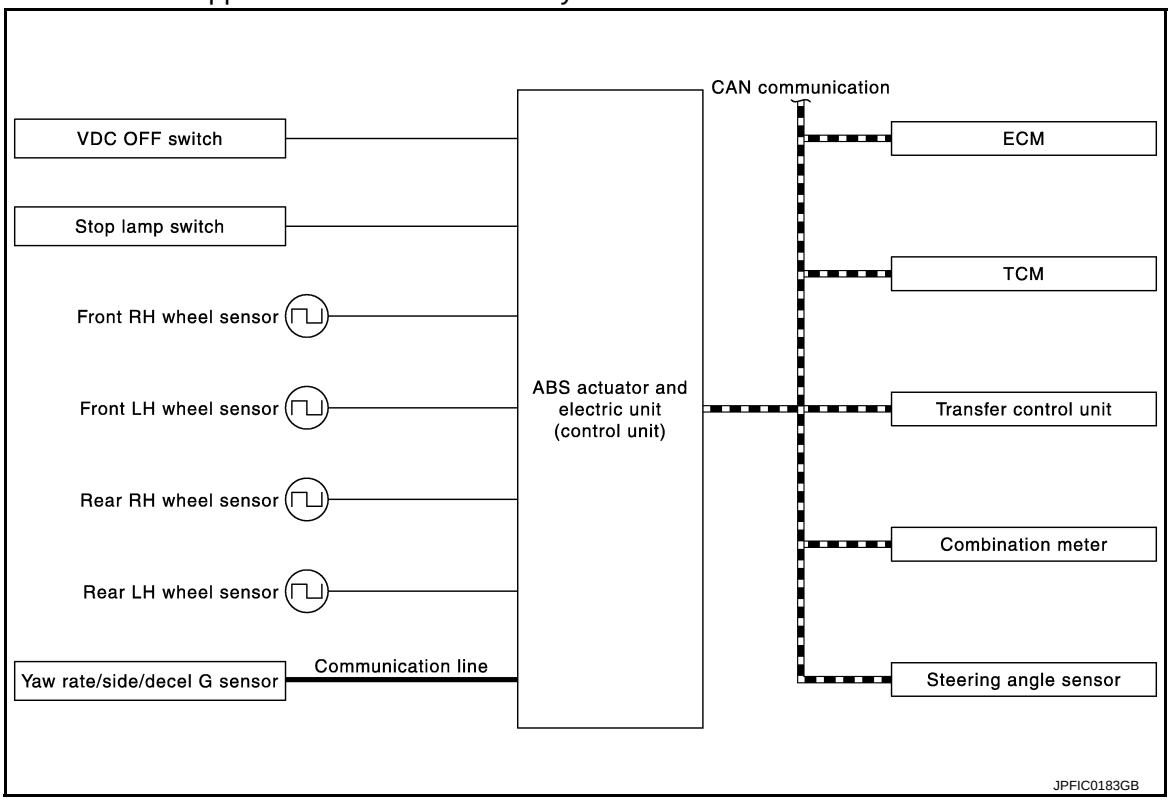

INPUT SIGNAL AND OUTPUT SIGNAL

Major signal transmission between each unit via communication lines is shown in the following table.

Component	Signal description
Yaw rate/side/decel G sensor	Mainly transmits the following signals to ABS actuator and electric unit (control unit) via communication line*1. • Yaw rate signal • Side G sensor signal • Decel G sensor signal
ECM	Mainly transmits the following signals to ABS actuator and electric unit (control unit) via CAN communication. • Accelerator pedal position signal • Engine speed signal Mainly receives the following signals from ABS actuator and electric unit (control unit) via CAN communication. • Target throttle position signal
TCM	Mainly transmits the following signals to ABS actuator and electric unit (control unit) via CAN communication. • Shift position signal
Transfer control unit*2	Mainly transmits the following signals to ABS actuator and electric unit (control unit) via CAN communication. • Current 4WD mode signal
Steering angle sensor	Mainly transmits the following signals to ABS actuator and electric unit (control unit) via CAN communication. • Steering angle sensor signal
Combination meter	Mainly receives the following signals from ABS actuator and electric unit (control unit) via CAN communication. • VDC warning lamp signal • VDC OFF indicator lamp

*1: Communication line between yaw rate/side/decal G sensor and ABS actuator and electric unit (control unit)
*2: Models with 4WD system

OPERATION CHARACTERISTICS

VDC Function That Prevents Oversteer Tendency

- During a cornering, brake force (brake fluid pressure) is applied on front wheel and rear wheel on the outer side of turn. Moment directing towards the outer side of turn is generated. Oversteer is prevented.

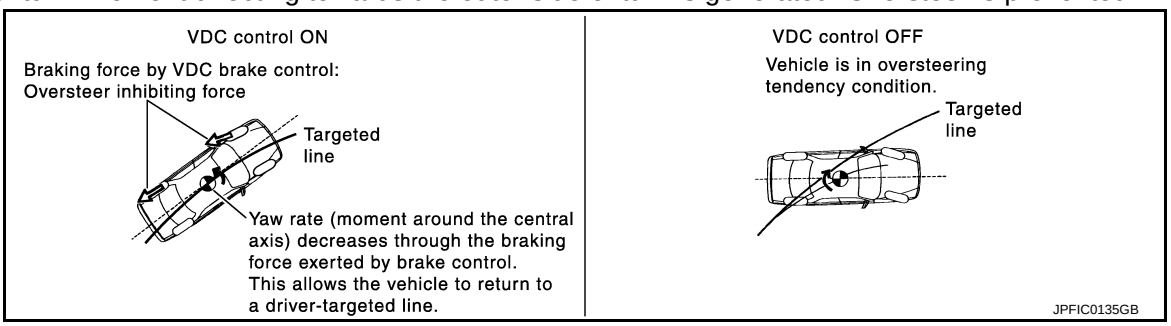

- Changing driving lane on a slippery road, when oversteer tendency is judged large, engine output is controlled as well as brake force (brake fluid pressure) of 4 wheels. Oversteer tendency decreases.

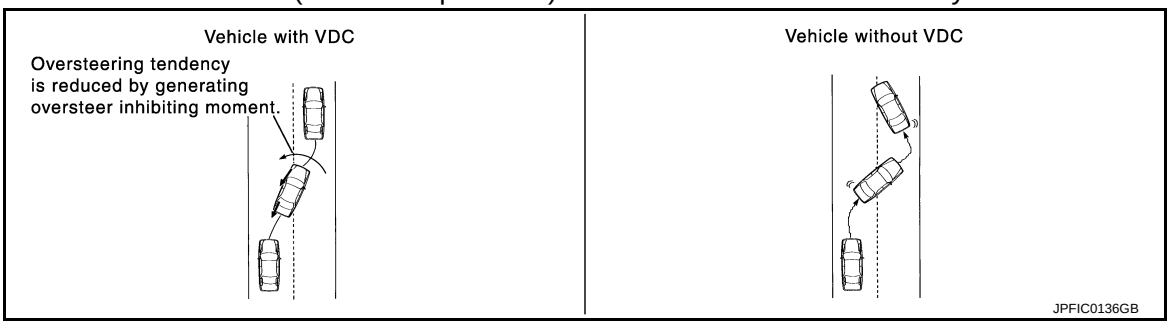

VDC Function That Prevents Understeer Tendency

- During a cornering, brake force (brake fluid pressure) is applied on front wheel and rear wheel on the inner side of turn. Moment directing towards the inner side of turn is generated. Understeer is prevented.

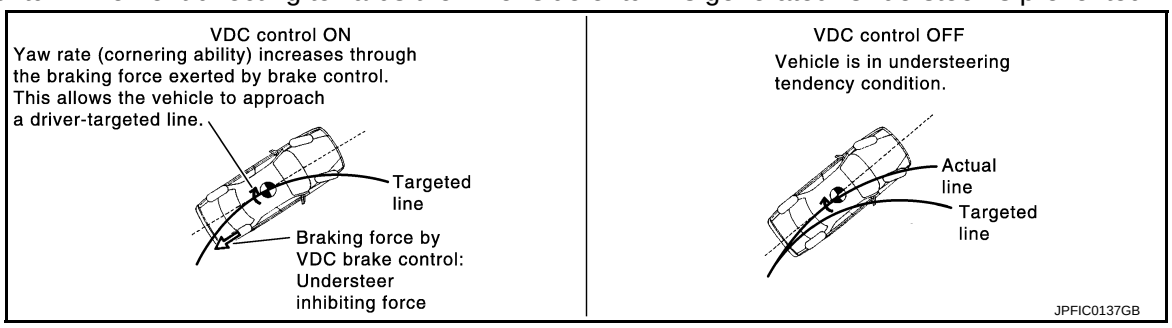

- Applying braking during a cornering on a slippery road, when understeer tendency is judged large, engine output is controlled as well as brake force (brake fluid pressure) of four wheels. Understeer tendency decreases.

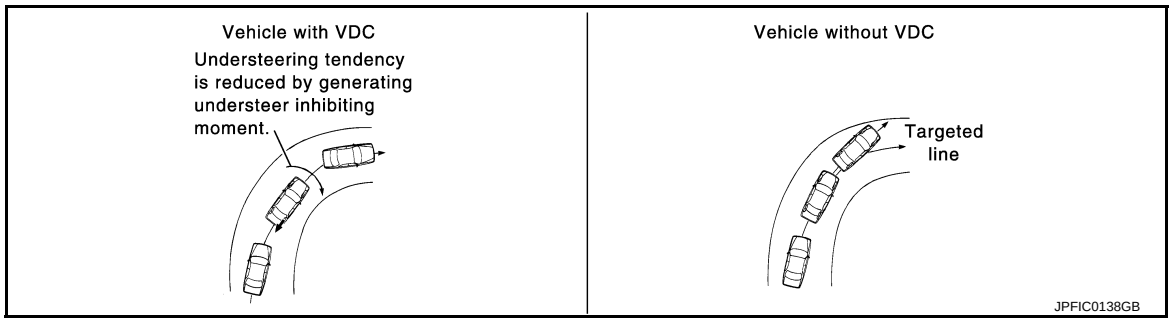

TCS FUNCTION

TCS FUNCTION : System Description

INFOID:0000000009012444

- Wheel spin status of drive wheel is detected by wheel sensor of 4 wheels. Engine output and transmission shift status is controlled so that slip rate of drive wheels is in appropriate level. When wheel spin occurs on drive wheel, ABS actuator and electric unit (control unit) perform brake force control of LH and RH drive wheels (apply brake force by increasing brake fluid pressure of drive wheel) and decrease engine torque by engine torque control. Wheel spin amount decreases. Engine torque is controlled to appropriate level.
- TCS function can be switched to non-operational status (OFF) by operating VDC OFF switch. In this case, VDC OFF indicator lamp turns ON.
- TCS function is not operate when 4WD mode is “4L”. (Models with 4WD system)
- VDC warning lamp blinking while TCS function is in operation and indicates to the driver that the function is in operation.
- Slight vibrations are felt on the brake pedal and the operation noises occur, when TCS function operates. This is not a malfunction because it is caused by TCS function that is normally operated.
- CONSULT can be used to diagnose the system diagnosis.
- Fail-safe function is adopted. When a malfunction occurs in TCS function, the control is suspended for VDC function, TCS function, hill start assist function and brake limited slip differential (BLSD) function. The vehicle status becomes the same as models without VDC function, TCS function, hill start assist function and brake limited slip differential (BLSD) function. However, ABS function and EBD function are operated normally. Refer to BRC-24, "Fail-safe".

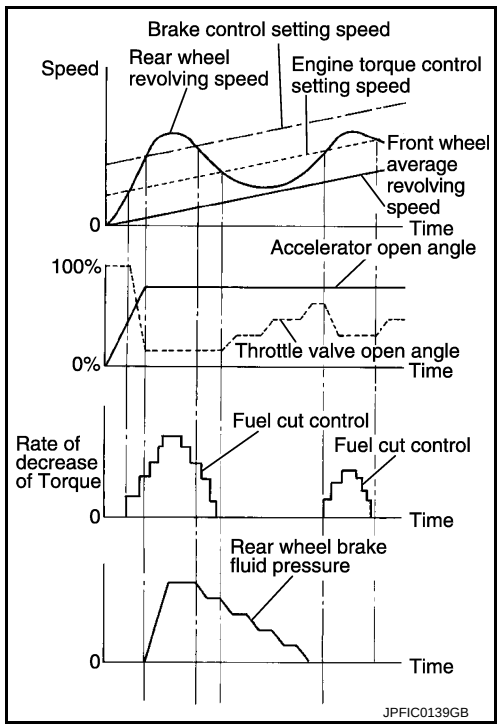

SYSTEM DIAGRAM

NOTE:

Transfer control unit is applied to models with 4WD system.

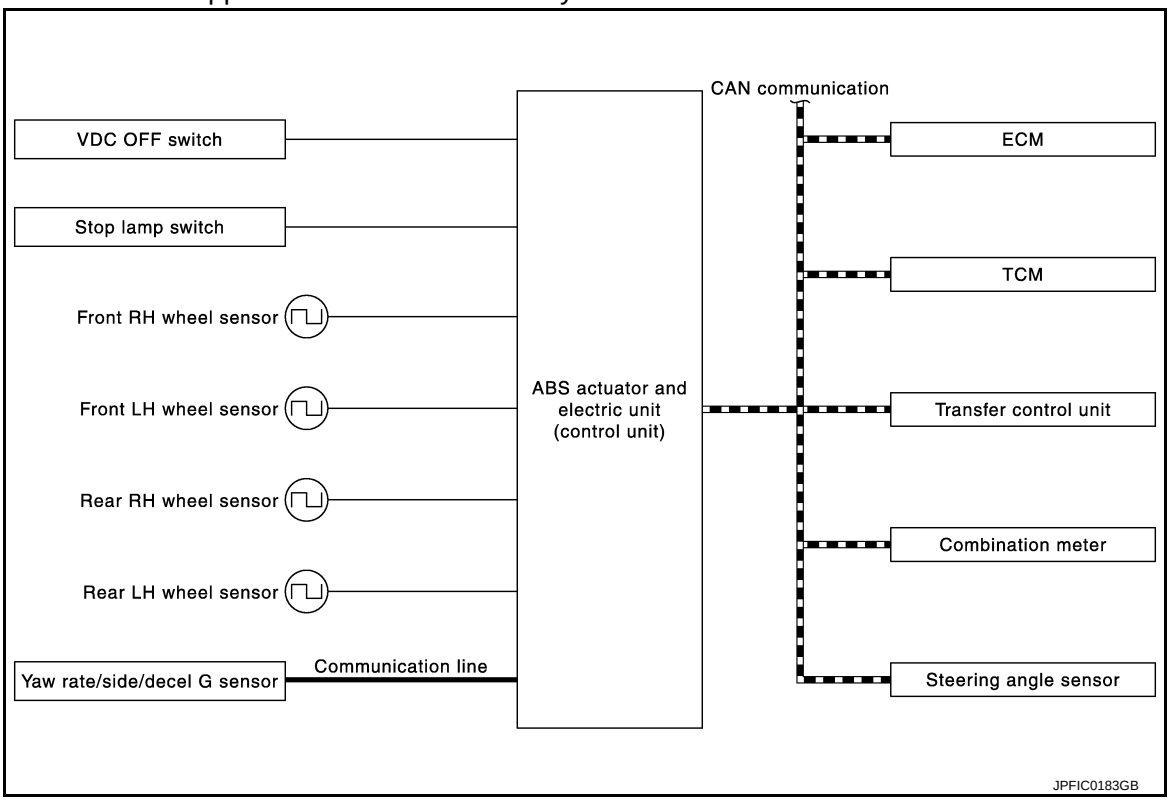

INPUT SIGNAL AND OUTPUT SIGNAL

Major signal transmission between each unit via communication lines is shown in the following table.

Component	Signal description
Yaw rate/side/decel G sensor	Mainly transmits the following signals to ABS actuator and electric unit (control unit) via communication line*1. • Yaw rate signal • Side G sensor signal • Decel G sensor signal
ECM	Mainly transmits the following signals to ABS actuator and electric unit (control unit) via CAN communication. • Accelerator pedal position signal • Engine speed signal Mainly receives the following signals from ABS actuator and electric unit (control unit) via CAN communication. • Target throttle position signal
TCM	Mainly transmits the following signals to ABS actuator and electric unit (control unit) via CAN communication. • Shift position signal
Transfer control unit*2	Mainly transmits the following signals to ABS actuator and electric unit (control unit) via CAN communication. • Current 4WD mode signal
Steering angle sensor	Mainly transmits the following signals to ABS actuator and electric unit (control unit) via CAN communication. • Steering angle sensor signal
Combination meter	Mainly receives the following signals from ABS actuator and electric unit (control unit) via CAN communication. • VDC warning lamp signal • VDC OFF indicator lamp

*1: Communication line between yaw rate/side/decal G sensor and ABS actuator and electric unit (control unit)
*2: Models with 4WD system

ABS FUNCTION

ABS FUNCTION : System Description

INFOID:0000000009012445

- By preventing wheel lock through brake force (brake fluid pressure) control that is electronically controlled by detecting wheel speed during braking, stability during emergency braking is improved so that obstacles can be easily bypassed by steering operation.
- During braking, control units calculates wheel speed and pseudo-vehicle speed, and transmits pressure increase, hold or decrease signals to actuator portion according to wheel slip status.
- The following effects are obtained by preventing wheel lock during braking.
- Vehicle tail slip is prevented during braking when driving straight.
- Understeer and oversteer tendencies are moderated during braking driving on a corner.
- Obstacles may be easily bypassed by steering operation during braking.
- Slight vibrations are felt on the brake pedal and the operation noises occur, when ABS function operates. This is not a malfunction because it is caused by ABS function that is normally operated.
- CONSULT can be used to diagnose the system diagnosis.
- Fail-safe function is adopted. When a malfunction occurs in ABS function, the control is suspended for VDC function, TCS function, hill start assist function and brake limited slip differential (BLSD) function. The vehicle status becomes the same as models without VDC function, TCS function, ABS function, hill start assist function and brake limited slip differential (BLSD) function. However, EBD function is operated normally. Refer to BRC-24, "Fail-safe".

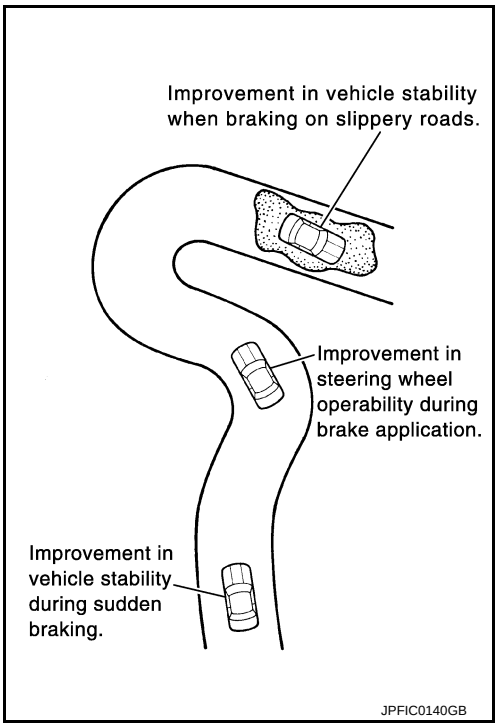

NOTE:
- ABS has the characteristic as described here, but it is not the device that helps reckless driving.
- To stop vehicle efficiently, ABS does not operate and ordinary brake operates at low speed [approx. 10 km/h (6.2 MPH) or less, but differs subject to road conditions).
- Self-diagnosis is performed immediately after when engine starts and when vehicle initially is driven [by vehicle speed approx. 15 km/h (9.3 MPH)]. Motor sounds are generated during self-diagnosis. In addition, brake pedal may be felt heavy when depressing brake pedal lightly. These symptoms are not malfunctions.

SYSTEM DIAGRAM

NOTE:

Transfer control unit is applied to models with 4WD system.

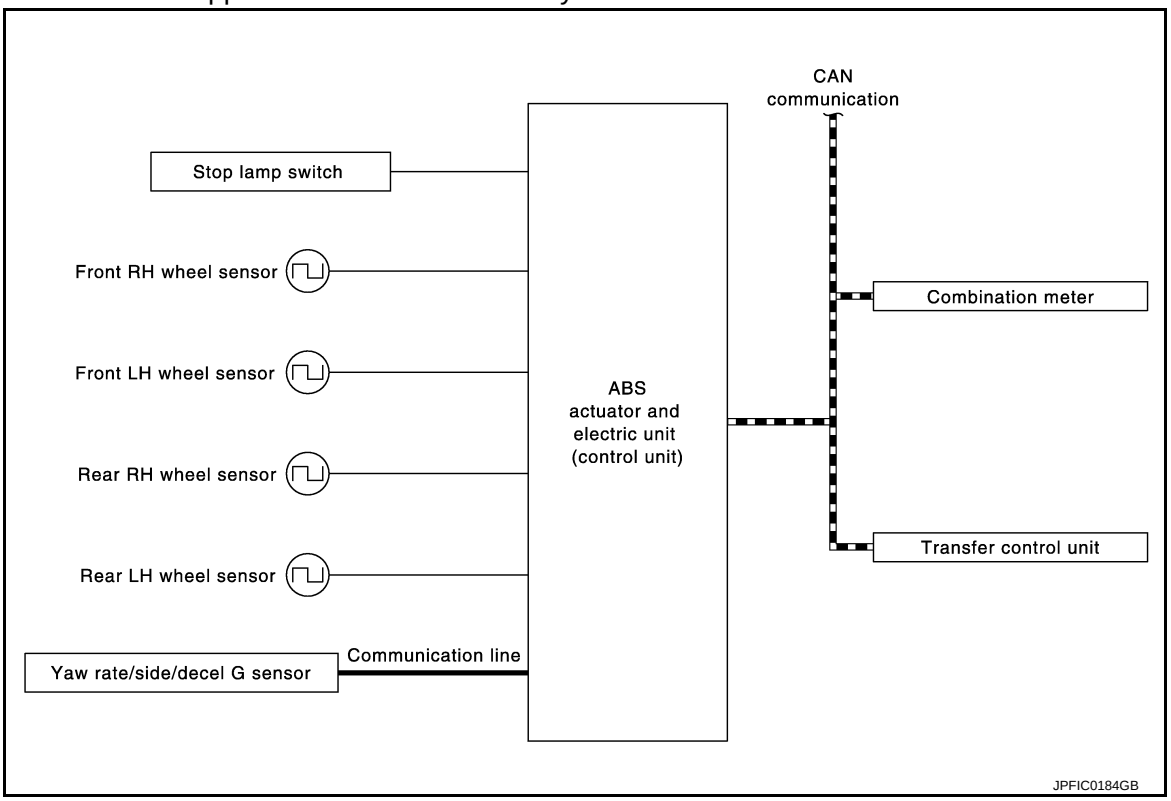

INPUT SIGNAL AND OUTPUT SIGNAL

Major signal transmission between each unit via communication lines is shown in the following table.

Component	Signal description
Yaw rate/side/decel G sensor	Mainly transmits the following signals to ABS actuator and electric unit (control unit) via communication line*1. • Yaw rate signal • Side G sensor signal • Decel G sensor signal
Transfer control unit*2	Mainly transmits the following signals to ABS actuator and electric unit (control unit) via CAN communication. • Current 4WD mode signal
Combination meter	Mainly receives the following signals from ABS actuator and electric unit (control unit) via CAN communication. • ABS warning lamp signal • VDC warning lamp signal

*1: Communication line between yaw rate/side/decal G sensor and ABS actuator and electric unit (control unit)
*2: Models with 4WD system

EBD FUNCTION

EBD FUNCTION : System Description

INFOID:0000000009012446

- By preventing rear wheel slip increase through rear wheel brake force (brake fluid pressure) control that is electronically controlled when slight skip on front and rear wheels are detected during braking, stability during braking is improved.

- EBD function is expanded and developed from conventional ABS function and corrects rear wheel brake force to appropriate level by electronic control according to load weight (number of passengers).

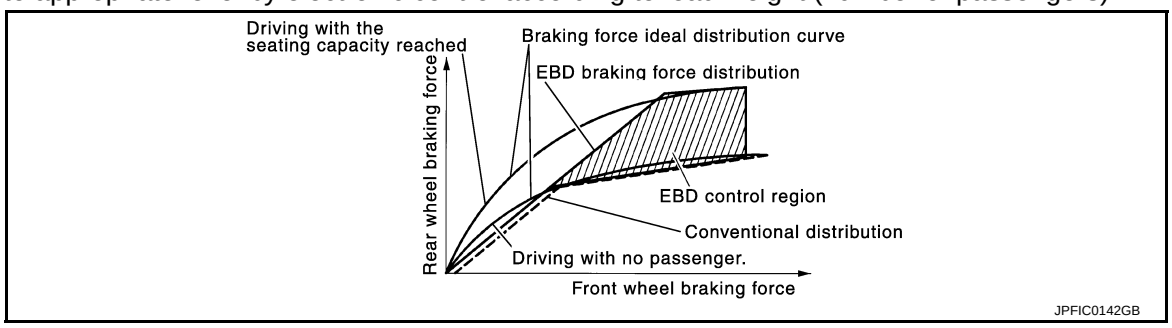

- During braking, control unit portion compares slight slip on front and rear wheels by wheel speed sensor signal, transmits drive signal to actuator portion when rear wheel slip exceeds front wheel slip for the specified value or more, and controls rear wheel brake force (brake fluid pressure) so that increase of rear wheel slip is prevented and slips on front wheel and rear wheel are nearly equalized. ABS control is applied when slip on each wheel increases and wheel speed is the threshold value of ABS control or less.
- CONSULT can be used to diagnose the system diagnosis.
- Fail-safe function is adopted. When a malfunction occurs in EBD function, the control is suspended for VDC function, TCS function, ABS function, EBD function, hill start assist function and brake limited slip differential (BLSD) function. The vehicle status becomes the same as models without VDC function, TCS function, ABS function, EBD function, hill start assist function and brake limited slip differential (BLSD) function. Refer to BRC-24, "Fail-safe".

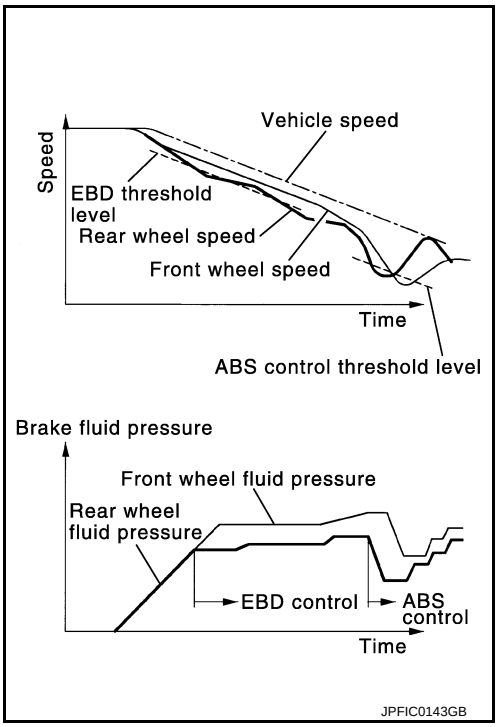

SYSTEM DIAGRAM

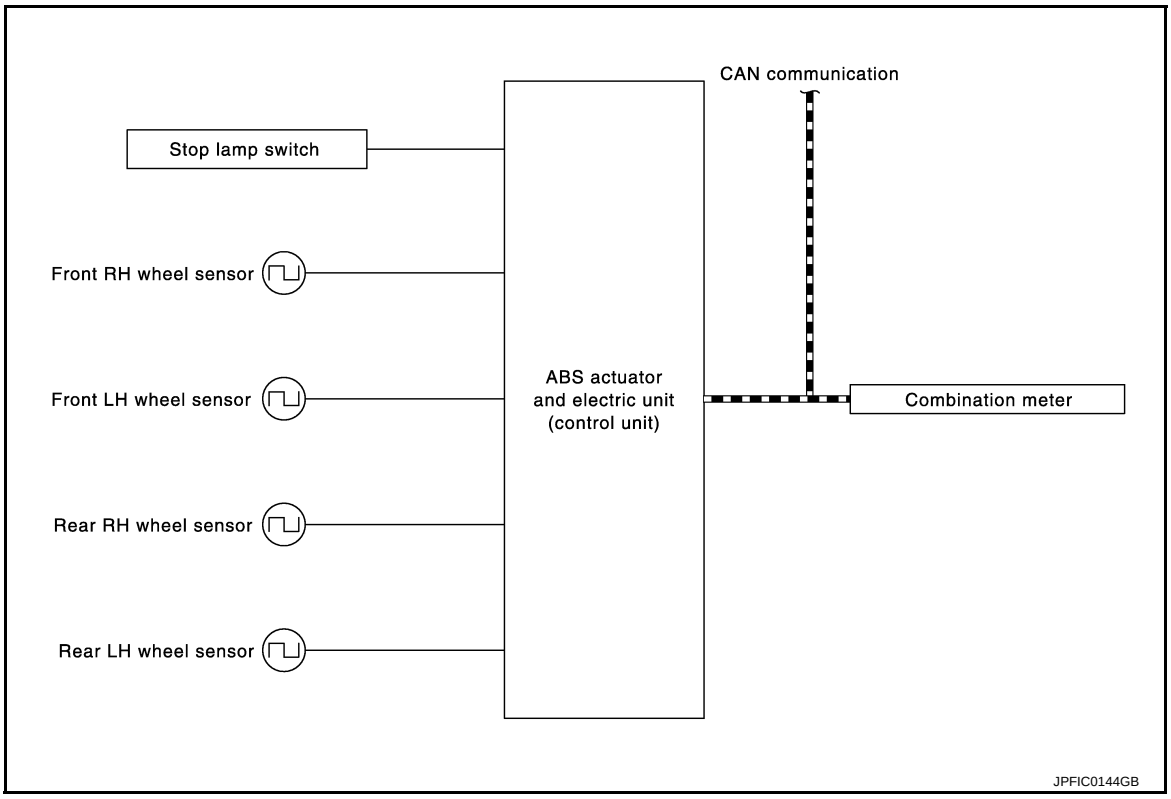

INPUT SIGNAL AND OUTPUT SIGNAL

Major signal transmission between each unit via communication lines is shown in the following table.

Component	Signal description
Combination meter	Mainly receives the following signals from ABS actuator and electric unit (control unit) via CAN communication. • VDC warning lamp signal • ABS warning lamp signal • Brake warning lamp signal

hill start assist FUNCTION

hill start assist FUNCTION : System Description

INFOID:0000000009012447

- This function maintains brake fluid pressure so that the vehicle does not move backwards even if brake pedal is released to depress accelerator pedal to start the vehicle while it is stopped on an uphill slope by depressing brake pedal.
- This function operates when the vehicle is in stop status on a uphill slope of slope ratio 10% or more and selector lever is in the position other than P or N.
- hill start assist function is only for the start aid. It maintains the brake fluid pressure for approx. 2 seconds after releasing the brake pedal, and then decreases the pressure gradually. If the vehicle can start by the accelerator operation, the brake is released automatically and a smooth start can be performed.
- Fail-safe function is adopted. When a malfunction occurs in hill start assist function, the control is suspended for VDC function, TCS function, hill start assist function and brake limited slip differential (BLSD) function. The vehicle status becomes the same as models without VDC function, TCS function, hill start assist function and brake limited slip differential (BLSD) function. However, ABS function and EBD function are operated normally. Refer to BRC-24, "Fail-safe".

SYSTEM DIAGRAM

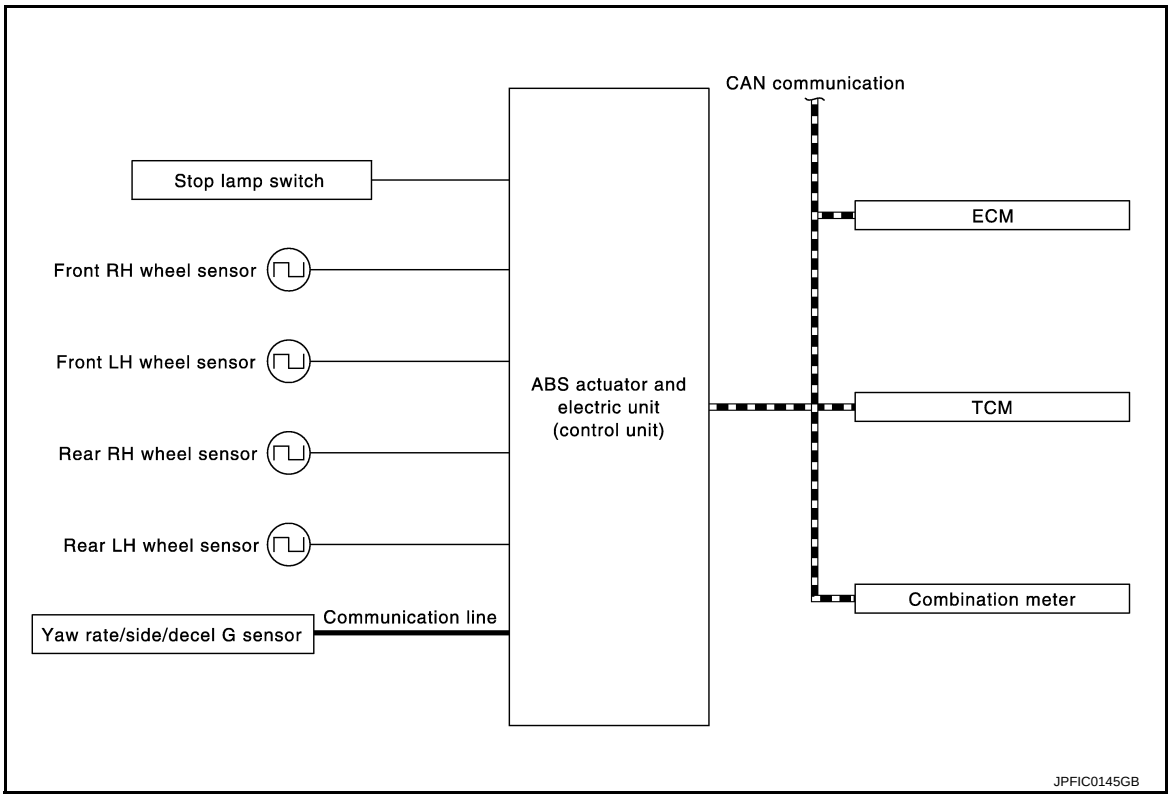

INPUT SIGNAL AND OUTPUT SIGNAL

Major signal transmission between each unit via communication lines is shown in the following table.

Component	Signal description
Yaw rate/side/decel G sensor	Mainly transmits the following signals to ABS actuator and electric unit (control unit) via communication line *. • Yaw rate signal • Side G sensor signal • Decel G sensor signal
ECM	Mainly transmits the following signals to ABS actuator and electric unit (control unit) via CAN communication. • Accelerator pedal position signal • Engine speed signal Mainly receives the following signals from ABS actuator and electric unit (control unit) via CAN communication. • Target throttle position signal
TCM	Mainly transmits the following signals to ABS actuator and electric unit (control unit) via CAN communication. • Shift position signal
Combination meter	Mainly receives the following signals from ABS actuator and electric unit (control unit) via CAN communication. • VDC warning lamp signal

*: Communication line between yaw rate/side/decal G sensor and ABS actuator and electric unit (control unit)

BRAKE LIMITED SLIP DIFFERENTIAL (BLSD) FUNCTION

BRAKE LIMITED SLIP DIFFERENTIAL (BLSD) FUNCTION : System Description

INFOID:0000000009012448

- LH and RH driving wheel spin is always monitored. If necessary, appropriate brake force is independently applied to LH or RH driving wheel so that one-sided wheel spin is avoided and traction is maintained. Mainly starting ability is improved.
- Brake limited slip differential (BLSD) function operates while VDC function is in non-operational status (OFF) by VDC OFF switch.

- VDC warning lamp blinking while brake limited slip differential (BLSD) function is in operation and indicates to the driver that the function is in operation.
- Slight vibrations are felt on the brake pedal and the operation noises occur, when brake limited slip differential (BLSD) function operates. This is not a malfunction because it is caused by brake limited slip differential (BLSD) function that is normally operated.
- Fail-safe function is adopted. When a malfunction occurs in brake limited slip differential (BLSD) function, the control is suspended for VDC function, TCS function, hill start assist function and brake limited slip differential (BLSD) function. The vehicle status becomes the same as models without VDC function, TCS function, hill start assist function and brake limited slip differential (BLSD) function. However, ABS function and EBD function are operated normally. Refer to BRC-24, "Fail-safe".

SYSTEM DIAGRAM

NOTE:

Transfer control unit is applied to models with 4WD system.

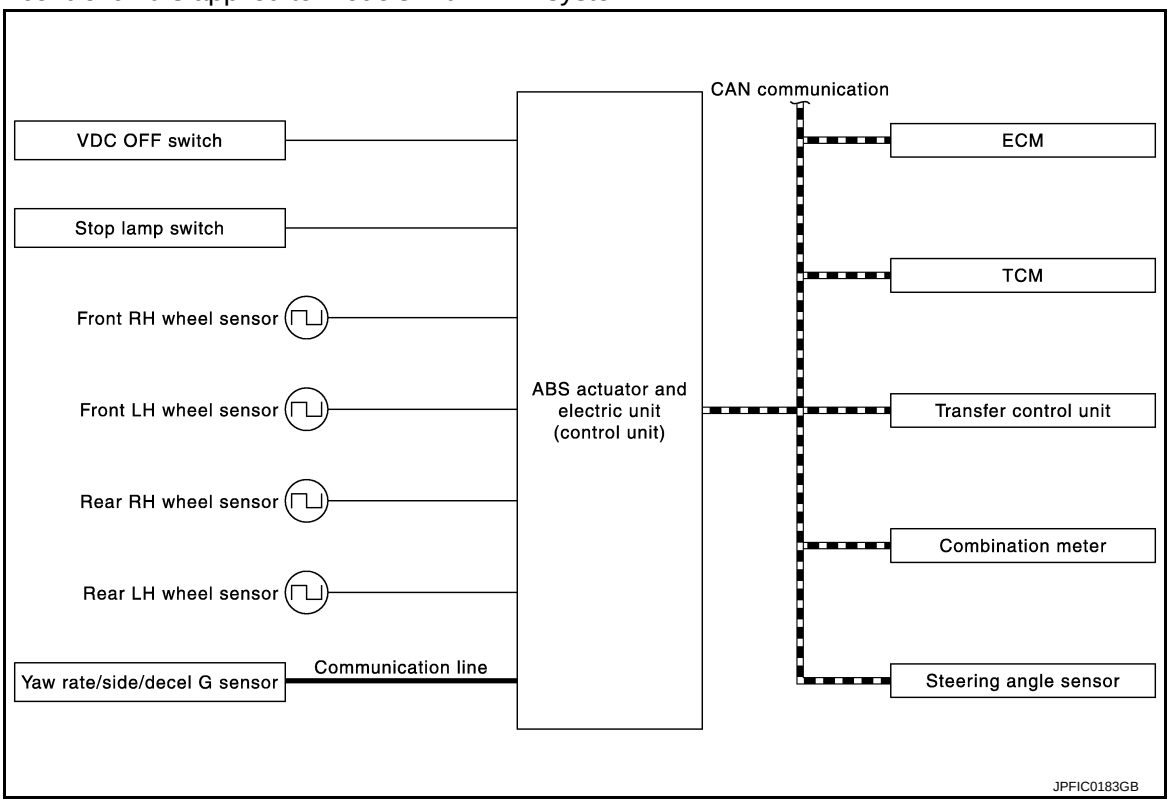

INPUT SIGNAL AND OUTPUT SIGNAL

Major signal transmission between each unit via communication lines is shown in the following table.

Component	Signal description
Yaw rate/side/decel G sensor	Mainly transmits the following signals to ABS actuator and electric unit (control unit) via communication line*1. • Yaw rate signal • Side G sensor signal • Decel G sensor signal
ECM	Mainly transmits the following signals to ABS actuator and electric unit (control unit) via CAN communication. • Accelerator pedal position signal • Engine speed signal Mainly receives the following signals from ABS actuator and electric unit (control unit) via CAN communication. • Target throttle position signal
TCM	Mainly transmits the following signals to ABS actuator and electric unit (control unit) via CAN communication. • Shift position signal

Component	Signal description
Transfer control unit*2	Mainly transmits the following signals to ABS actuator and electric unit (control unit) via CAN communication. • Current 4WD mode signal
Steering angle sensor	Mainly transmits the following signals to ABS actuator and electric unit (control unit) via CAN communication. • Steering angle sensor signal
Combination meter	Mainly receives the following signals from ABS actuator and electric unit (control unit) via CAN communication. • VDC warning lamp signal

*1: Communication line between yaw rate/side/decal G sensor and ABS actuator and electric unit (control unit)
*2: Models with 4WD system

DIAGNOSIS SYSTEM [ABS ACTUATOR AND ELECTRIC UNIT (CONTROL UNIT)]

CONSULT Function

INFOID:0000000009012449

APPLICATION ITEMS

CONSULT can display each diagnostic item using the diagnostic test modes as follows.

Mode	Function description
ECU identification	Parts number of ABS actuator and electric unit (control unit) can be read.
Self Diagnostic Result	Self-diagnostic results and freeze frame data can be read and erased quickly.*
DATA MONITOR	Input/Output data in the ABS actuator and electric unit (control unit) can be read.
ACTIVE TEST	Diagnostic Test Mode in which CONSULT drives some actuators apart from the ABS actuator and electric unit (control unit) and also shifts some parameters in a specified range.
WORK SUPPORT	Components can be quickly and accurately adjusted.

*: The following diagnosis information is erased by erasing.

- DTC
- Freeze frame data (FFD)

ECU IDENTIFICATION

ABS actuator and electric unit (control unit) part number can be read.

SELF DIAGNOSTIC RESULT

Refer to BRC-50, "DTC Index".

When “CRNT” is displayed on self-diagnosis result,

- The system is presently malfunctioning.

When “PAST” is displayed on self-diagnosis result,

- System malfunction in the past is detected, but the system is presently normal.

Freeze frame data (FFD)

Item name	Display item
IGN counter (0 – 39)	The number of times that ignition switch is turned ON after the DTC is detected is displayed. • When “0” is displayed: It indicates that the system is presently malfunctioning. • When except “0” is displayed: It indicates that system malfunction in the past is detected, but the system is presently normal. **NOTE:** Each time when ignition switch is turned OFF to ON, numerical number increases in 1 → 2 → 3...38 → 39. When the operation number of times exceeds 39, the number do not increase and “39” is displayed until self-diagnosis is erased.

DATA MONITOR

NOTE:

The following table includes information (items) inapplicable to this vehicle. For information (items) applicable to this vehicle, refer to CONSULT display items.

×: Applicable

Item (Unit)	Monitor item selection		Note
	INPUT SIGNALS	MAIN ITEMS	
FR LH SENSOR [km/h (MPH)]	×	×	Wheel speed calculated by front LH wheel sensor is displayed.
FR RH SENSOR [km/h (MPH)]	×	×	Wheel speed calculated by front RH wheel sensor is displayed.
RR LH SENSOR [km/h (MPH)]	×	×	Wheel speed calculated by rear LH wheel sensor is displayed.
RR RH SENSOR [km/h (MPH)]	×	×	Wheel speed calculated by rear RH wheel sensor is displayed.

Item (Unit)	Monitor item selection		Note
	INPUT SIGNALS	MAIN ITEMS	
DECEL G-SEN (G)	×	×	Decel G detected by decel G sensor is displayed.
FR RH IN SOL (On/Off)		×	Operation status of front RH wheel ABS IN valve is displayed.
FR RH OUT SOL (On/Off)		×	Operation status of front RH wheel ABS OUT valve is displayed.
FR LH IN SOL (On/Off)		×	Operation status of front LH wheel ABS IN valve is displayed.
FR LH OUT SOL (On/Off)		×	Operation status of front LH wheel ABS OUT valve is displayed.
RR RH IN SOL (On/Off)		×	Operation status of rear RH wheel ABS IN valve is displayed
RR RH OUT SOL (On/Off)		×	Operation status of rear RH wheel ABS OUT valve is displayed.
RR LH IN SOL (On/Off)		×	Operation status of rear LH wheel ABS IN valve is displayed.
RR LH OUT SOL (On/Off)		×	Operation status of rear LH wheel ABS OUT valve is displayed.
EBD WARN LAMP (On/Off)			Brake warning lamp ON/OFF status is displayed. (Note 1)
STOP LAMP SW (On/Off)	×	×	Stop lamp switch signal input status is displayed.
MOTOR RELAY (On/Off)		×	ABS motor and motor relay status is displayed.
ACTUATOR RLY (On/Off)		×	ABS actuator relay status is displayed.
ABS WARN LAMP (On/Off)		×	ABS warning lamp ON/OFF status is displayed. (Note 1)
OFF LAMP (On/Off)		×	VDC OFF indicator lamp ON/OFF status is displayed.(Note 1)
OFF SW (On/Off)	×	×	VDC OFF switch signal input status is displayed.
SLIP/VDC LAMP (On/Off)		×	VDC warning lamp ON/OFF status is displayed.(Note 1)
BATTERY VOLT (V)	×	×	Voltage supplied to ABS actuator and electric unit (control unit) is displayed.
GEAR	×	×	Current gear position judged from current gear position signal is displayed.
ENGINE SPEED (tr/min)	×	×	Engine speed status is displayed.
YAW RATE SEN (d/s)	×	×	Yaw rate detected by yaw rate sensor is displayed.
R POSI SIG (On/Off)			R range signal input status judged from R range signal is displayed.
4WD MODE MON (AUTO/LOCK/##)	×	×	4WD control status is displayed.
N POSI SIG (On/Off)			N range signal input status judged from N range signal is displayed.
CV1 (On/Off)			Cut valve 1 operation status is displayed.
CV2 (On/Off)			Cut valve 2 operation status is displayed.

Item (Unit)	Monitor item selection		Note
	INPUT SIGNALS	MAIN ITEMS	
SV1 (On/Off)			Suction valve 1 operation status is displayed.
SV2 (On/Off)			Suction valve 2 operation status is displayed.
STOP LAMP SW2 (On/Off)			Stop lamp switch signal input status is displayed.
ACCEL POS SIG (%)	×		Displays the Accelerator pedal position
SIDE G-SENSOR (m/s^2)	×		Side G detected by side G sensor is displayed.
STR ANGLE SIG (°)	×		Steering angle detected by steering angle sensor is displayed.
PRESS SENSOR (bar)	×		Detects the brake fluid pressure of master cylinder part is displayed.
ACCUM PRESS SEN (bar)			Detects the brake fluid pressure of accumulator is displayed.
CONT PRESS SEN (bar)			Detects the brake fluid pressure of control pressure sensor is displayed
EBD SIGNAL (On/Off)			EBD operation status is displayed.
ABS SIGNAL (On/Off)			ABS operation status is displayed.
TCS SIGNAL (On/Off)			TCS operation status is displayed.
VDC SIGNAL (On/Off)			VDC operation status is displayed.
EBD FAIL SIG (On/Off)			EBD fail-safe signal status is displayed.
ABS FAIL SIG (On/Off)			ABS fail-safe signal status is displayed.
TCS FAIL SIG (On/Off)			TCS fail-safe signal status is displayed.
VDC FAIL SIG (On/Off)			VDC fail-safe signal status is displayed.
CRANKING SIG (On/Off)			Cranking status is displayed.
FLUID LEV SW (On/Off)	×		Brake fluid level signal input status via CAN communication is displayed.
PARK BRAKE SW (On/Off)	×		Parking brake switch signal input status via CAN communication is displayed.
STP ON RLY (On/Off)			Stop lamp switch relay status is displayed.
USS SIG(Note 2) (On/Off)			hill start assist operation status is displayed.

Note 1: Refer to BRC-15, "System Description" for ON/OFF conditions of each warning lamp and indicator lamp.
Note 2: USS means “hill start assist”

ACTIVE TEST

The active test is used to determine and identify details of a malfunction, based on self-diagnosis test result sand data obtained in the DATA MONITOR. In response to instructions from CONSULT, instead of those from

ABS actuator and electric unit (control unit) on the vehicle, a drive signal is sent to the actuator to check its operation.

CAUTION:
- **Never perform ACTIVE TEST while driving the vehicle.**
- **Always bleed air from brake system before active test.**
- **Never perform active test when system is malfunctioning.**

NOTE:
- When active test is performed while depressing the pedal, the pedal depressing stroke may change. This is not a malfunction.
- “TEST IS STOPPED” is displayed approx. 10 seconds after operation start.
- When performing active test again after “TEST IS STOPPED” is displayed, select “BACK”.
- ABS warning lamp, brake warning lamp and VDC warning lamp may turn ON during active test. This is not a malfunction.

ABS IN Valve and ABS OUT Valve
When “Up”, “Keep” or “Down” is selected on display screen, the following items are displayed when system is normal.

Test item	Display Item	Display		
		Up	Keep	Down
FR RH SOL	FR RH IN SOL	Off	On*	On*
	FR RH OUT SOL	Off	Off	On*
FR LH SOL	FR LH IN SOL	Off	On*	On*
	FR LH OUT SOL	Off	Off	On*
RR RH SOL	RR RH IN SOL	Off	On*	On*
	RR RH OUT SOL	Off	Off	On*
RR LH SOL	RR LH IN SOL	Off	On*	On*
	RR LH OUT SOL	Off	Off	On*

*: Immediately after being selected, status is “On”. Status changes to “Off” after approx. 2 seconds.

ABS IN Valve (ACT) and ABS OUT Valve (ACT)
When “Up”, “ACT KEEP” or “ACT UP” is selected on display screen, the following items are displayed when system is normal.

Test item	Display Item	Display		
		Up	ACT KEEP	ACT UP
FR RH SOL (ACT)	FR RH IN SOL	Off	Off	On*
	FR RH OUT SOL	Off	Off	Off
	CV1	Off	On*	On*
	SV1	Off	Off	On*
FR LH SOL (ACT)	FR LH IN SOL	Off	Off	On*
	FR LH OUT SOL	Off	Off	Off
	CV1	Off	On*	On*
	SV1	Off	Off	On*
RR RH SOL (ACT)	RR RH IN SOL	Off	Off	On*
	RR RH OUT SOL	Off	Off	Off
	CV2	Off	On*	On*
	SV2	Off	Off	On*
RR LH SOL (ACT)	RR LH IN SOL	Off	Off	On*
	RR LH OUT SOL	Off	Off	Off
	CV2	Off	On*	On*
	SV2	Off	Off	On*

*: Immediately after being selected, status is “On”. Status changes to “Off” after approx. 2 seconds.

Stop Lamp ON Relay
When “On” or “Off” is selected on display screen, the following items are displayed when system is normal.

Test item	Display Item	Display	
		On	Off
STOP LAMP ON RELAY	STOP LAMP ON RELAY	On	Off

NOTE:
Display occasionally changes On/Off for a moment after ignition switch is turned ON. This is operation for checking purposes and is not a malfunction.

WORK SUPPORT

Conditions	Description
ST ANGLE SENSOR ADJUSTMENT	Perform neutral position adjustment of steering angle sensor.
DECEL G SENSOR CALIBRATION	Perform decel G sensor calibration.

ECU DIAGNOSIS INFORMATION

ABS ACTUATOR AND ELECTRIC UNIT (CONTROL UNIT)

Reference Value

INFOID:0000000009012450

CONSULT DATA MONITOR STANDARD VALUE

NOTE:
The following table includes information (items) inapplicable to this vehicle. For information (items) applicable to this vehicle, refer to CONSULT display items.

Monitor item	Condition	Reference values in normal operation
FR LH SENSOR	Vehicle stopped	0.00 km/h (MPH)
	When driving(Note 1)	Nearly matches the speedometer display (within ±10%)
FR RH SENSOR	Vehicle stopped	0.00 km/h (MPH)
	When driving(Note 1)	Nearly matches the speedometer display (within ±10%)
RR LH SENSOR	Vehicle stopped	0.00 km/h (MPH)
	When driving(Note 1)	Nearly matches the speedometer display (within ±10%)
RR RH SENSOR	Vehicle stopped	0.00 km/h (MPH)
	When driving(Note 1)	Nearly matches the speedometer display (within ±10%)
DECEL G-SEN	When stopped	Approx. 0 G
	During acceleration	Positive value
	During deceleration	Negative value
FR RH IN SOL	Active	On
	Inactive	Off
FR RH OUT SOL	Active	On
	Inactive	Off
FR LH IN SOL	Active	On
	Inactive	Off
FR LH OUT SOL	Active	On
	Inactive	Off
RR RH IN SOL	Active	On
	Inactive	Off
RR RH OUT SOL	Active	On
	Inactive	Off
RR LH IN SOL	Active	On
	Inactive	Off
RR LH OUT SOL	Active	On
	Inactive	Off
EBD WARN LAMP	When brake warning lamp is ON(Note 2)	On
	When brake warning lamp is OFF(Note 2)	Off
STOP LAMP SW	Brake pedal depressed	On
	Brake pedal not depressed	Off
MOTOR RELAY	Active	On
	Inactive	Off

Monitor item	Condition	Reference values in normal operation
ACTUATOR RLY	Active	On
	Inactive (in fail-safe mode)	Off
ABS WARN LAMP	When ABS warning lamp is ON(Note 2)	On
	When ABS warning lamp is OFF(Note 2)	Off
OFF LAMP	When VDC OFF indicator lamp is ON(Note 2)	On
	When VDC OFF indicator lamp is OFF(Note 2)	Off
OFF SW	VDC OFF switch ON	On
	VDC OFF switch OFF	Off
SLIP/VDC LAMP	When VDC warning lamp is ON or Blinking(Note 2)	On
	When VDC warning lamp is OFF(Note 2)	Off
BATTERY VOLT	Ignition switch ON	10 – 16 V
GEAR	Driving	1 – 7 Depending on shift status
ENGINE SPEED	Engine stopped	0 tr/min
	Engine running	Almost same reading as tachometer
YAW RATE SEN	Vehicle stopped	Approx. 0 d/s
	Turning right	Negative value
	Turning left	Positive value
R POSI SIG	When selector lever is in the R position	On
	When selector lever is in the other position than R	Off
4WD MODE MON	When 4WD sift switch is AUTO position	AUTO
	When 4WD sift switch is 4H position	LOCK
	When 4WD sift switch is 4L position	##
N POSI SIG	When selector lever is in the N position	On
	When selector lever is in the other position than N	Off
CV1	Active	On
	Inactive	Off
CV2	Active	On
	Inactive	Off
SV1	Active	On
	Inactive	Off
SV2	Active	On
	Inactive	Off
STOP LAMP SW2	Brake pedal depressed	On
	Brake pedal not depressed	Off
ACCEL POS SIG	Never depress accelerator pedal (with ignition switch ON)	0%
	Depress accelerator pedal (with ignition switch ON)	0 – 100%
SIDE G-SENSOR	Vehicle stopped	Approx. 0 m/s^2
	Right turn	Negative value
	Left turn	Positive value

Monitor item	Condition	Reference values in normal operation
STR ANGLE SIG	When driving straight	0±2.5°
	When steering wheel is steered to LH by 90°	Approx. –90°
	When steering wheel is steered to RH by 90°	Approx. +90°
PRESS SENSOR	Brake pedal not depressed	Approx. 0 bar
	Brake pedal depressed	(–40) – (+300) bar
ACCUM PRESS SEN	With ignition switch ON	Approx. 0 – 210 bar (Proportional to the amount of accumulated pressure in the accumulator)
CONT PRESS SEN	Brake pedal not depressed	Approx. 0 bar
	Brake pedal depressed	(–40) – (+300) bar
EBD SIGNAL	EBD is active	On
	EBD is inactive	Off
ABS SIGNAL	ABS is active	On
	ABS is inactive	Off
TCS SIGNAL	TCS is active	On
	TCS is inactive	Off
VDC SIGNAL	VDC is active	On
	VDC is inactive	Off
EBD FAIL SIG	In EBD fail-safe	On
	EBD is normal	Off
ABS FAIL SIG	In ABS fail-safe	On
	ABS is normal	Off
TCS FAIL SIG	In TCS fail-safe	On
	TCS is normal	Off
VDC FAIL SIG	In VDC fail-safe	On
	VDC is normal	Off
CRANKING SIG	At cranking	On
	Other than at cranking	Off
FLUID LEV SW	When brake fluid level switch is ON (brake fluid level is less than the specified level)	On
	When brake fluid level switch is OFF	Off
PARK BRAKE SW	When parking brake is active	On
	Parking brake is released	Off
STP ON RLY	Stop lamp relay is active	On
	Stop lamp relay is inactive	Off
USS SIG(Note 3)	hill start assist is active	On
	hill start assist is inactive	Off

Note 1: Confirm tire pressure is standard value.
Note 2: Refer to BRC-15, "System Description" for ON/Blinking/OFF conditions of each warning lamp and indicator lamp.
Note 3: USS means “hill start assist”.

Fail-safe

INFOID:0000000009012451

VDC FUNCTION, TCS FUNCTION, hill start assist FUNCTION AND BRAKE LIMITED SLIP DIFFERENTIAL (BLSD) FUNCTION

VDC warning lamp in combination meter turn ON when a malfunction occurs in system [ABS actuator and electric unit (control unit)]. The control is suspended for VDC function, TCS function, hill start assist function

and brake limited slip differential (BLSD) function. The Vehicle status becomes the same as models without VDC function, TCS function, hill start assist function and brake limited slip differential (BLSD) function. However, ABS function and EBD function are operated normally.

ABS FUNCTION

ABS warning lamp and VDC warning lamp in combination meter turn ON when a malfunction occurs in system [ABS actuator and electric unit (control unit)]. The control is suspended for VDC function, TCS function, ABS function, hill start assist function and brake limited slip differential (BLSD) function. The vehicle status becomes the same as models without VDC function, TCS function, ABS function, hill start assist function and brake limited slip differential (BLSD) function. However, EBD function is operated normally.

NOTE:

ABS self-diagnosis sound may be heard the same as in the normal condition, because self-diagnosis is performed when ignition switch turns ON and when vehicle initially starts.

EBD FUNCTION

ABS warning lamp, brake warning lamp and VDC warning lamp in combination meter turn ON when a malfunction occurs in system [ABS actuator and electric unit (control unit)]. The control is suspended for VDC function, TCS function, ABS function, EBD function, hill start assist function and brake limited slip differential (BLSD) function. The vehicle status becomes the same as models without VDC function, TCS function, ABS function, EBD function, hill start assist function and brake limited slip differential (BLSD) function.

DTC	Malfunction detected condition	Fail-safe condition
C1101	When an open circuit is detected in rear RH wheel sensor circuit.	The following functions are suspended. • VDC function • TCS function • ABS function • EBD function (only when both 2 rear wheels are malfunctioning) • hill start assist function • Brake limited slip differential (BLSD) function
C1102	When an open circuit is detected in rear LH wheel sensor circuit.	
C1103	When an open circuit is detected in front RH wheel sensor circuit.	
C1104	When an open circuit is detected in front LH wheel sensor circuit.	
C1105	• When power supply voltage of rear RH wheel sensor is low. • When distance between rear RH wheel sensor and rear RH wheel sensor rotor is large. • When installation of rear RH wheel sensor or rear RH wheel sensor rotor is not normal.	
C1106	• When power supply voltage of rear LH wheel sensor is low. • When distance between rear LH wheel sensor and rear LH wheel sensor rotor is large. • When installation of rear LH wheel sensor or rear LH wheel sensor rotor is not normal.	
C1107	• When power supply voltage of front RH wheel sensor is low. • When distance between front RH wheel sensor and front RH wheel sensor rotor is large. • When installation of front RH wheel sensor or front RH wheel sensor rotor is not normal.	
C1108	• When power supply voltage of front LH wheel sensor is low. • When distance between front LH wheel sensor and front LH wheel sensor rotor is large. • When installation of front LH wheel sensor or front LH wheel sensor rotor is not normal.	
C1109	• When ignition voltage is 10 V or less. • When ignition voltage is 16 V or more.	The following functions are suspended. • VDC function • TCS function • ABS function • EBD function • hill start assist function • Brake limited slip differential (BLSD) function
C1111	• When a malfunction is detected in motor or motor relay. • When a low pressure malfunction is detected in accumulator. • When a malfunction is detected in accumulator pressure sensor.	

DTC	Malfunction detected condition	Fail-safe condition
C1115	When difference in wheel speed between any wheel and others is detected during the vehicle is driven, because of installation of other tires than specified.	The following functions are suspended. • VDC function • TCS function • ABS function • hill start assist function • Brake limited slip differential (BLSD) function
C1116	• When stop lamp switch signal is not input when brake pedal depress. • When stop lamp switch signal is not input when stop lamp relay operates.	
C1118*1	When a malfunction is detected in transfer control unit system.	
C1120	When a malfunction is detected in front LH ABS IN valve.	The following functions are suspended. • VDC function • TCS function • ABS function • EBD function • hill start assist function • Brake limited slip differential (BLSD) function
C1121	When a malfunction is detected in front LH ABS OUT valve.	
C1122	When a malfunction is detected in front RH ABS IN valve.	
C1123	When a malfunction is detected in front RH ABS OUT valve.	
C1124	When a malfunction is detected in rear LH ABS IN valve.	
C1125	When a malfunction is detected in rear LH ABS OUT valve.	
C1126	When a malfunction is detected in rear RH ABS IN valve.	
C1127	When a malfunction is detected in rear RH ABS OUT valve.	
C1130	When a malfunction is detected in ECM system.	The following functions are suspended. • VDC function • TCS function • hill start assist function • Brake limited slip differential (BLSD) function
C1140	When a malfunction is detected in actuator relay.	The following functions are suspended. • VDC function • TCS function • ABS function • EBD function • hill start assist function • Brake limited slip differential (BLSD) function
C1142*2	When a malfunction is detected in master cylinder pressure sensor or control pressure sensor.	The following functions are suspended. • VDC function • TCS function • hill start assist function • Brake limited slip differential (BLSD) function
C1143	When a malfunction is detected in steering angle sensor.	
C1144	When neutral position adjustment of steering angle sensor is not complete.	
C1145	• When a malfunction is detected in yaw rate signal. • When yaw rate signal is not continuously received for 2 seconds or more.	
	• When side G signal is not continuously received for 2 seconds or more. • When decel G signal is not continuously received for 2 seconds or more.	The following functions are suspended. • VDC function • TCS function • ABS function • hill start assist function • Brake limited slip differential (BLSD) function
C1146	When a malfunction is detected in side/decel G signal.	
C1155	• When brake fluid level low signal is detected. • When an open circuit is detected in brake fluid level switch circuit.	
C1160	When calibration of yaw rate/side/decal G sensor is not complete.	
C1164	When a malfunction is detected in cut valve 1.	The following functions are suspended. • VDC function • TCS function • ABS function • EBD function • hill start assist function • Brake limited slip differential (BLSD) function
C1165	When a malfunction is detected in cut valve 2.	
C1166	When a malfunction is detected in suction valve 1.	
C1167	When a malfunction is detected in suction valve 2.	

DTC	Malfunction detected condition	Fail-safe condition
C1170	When the information in ABS actuator and electric unit (control unit) is not the same.	The following functions are suspended. • VDC function • TCS function • ABS function • hill start assist function • Brake limited slip differential (BLSD) function
C118E	When performing excessive brake pedal operation with the vehicle stopped. [When accumulator fluid pressure reaches 11.43 MPa (114 bar, 116.6 kg/cm^2, 1657 psi) after reaching 17.3 MPa (173 bar, 176.5 kg/cm^2, 2509 psi.]	The following functions are suspended. • VDC function • TCS function • ABS function • EBD function • hill start assist function • Brake limited slip differential (BLSD) function
U1000	When CAN communication signal is not continuously received for 2 seconds or more.	The following functions are suspended. • VDC function • TCS function • ABS function • hill start assist function • Brake limited slip differential (BLSD) function

*1: Models with 4WD System
*2: Models with Advanced Driver Assistance System

Protection Function

INFOID:0000000009012452

The VDC warning lamp, ABS warning lamp and brake warning lamp turns ON and DTC “C118E” may be detected in self-diagnosis result of “ABS” when the brake pedal is excessively operated, such as air bleeding. This is not a system malfunction because this occurs due to the temporary decrease in accumulator fluid pressure. The system returns to normal condition when the accumulator fluid pressure reaches the specified pressure with the ignition switch ON and the VDC warning lamp, ABS warning lamp, and brake warning lamp turn OFF. After these steps, erase self-diagnosis results for “ABS” with CONSULT.

DTC	• VDC warning lamp • ABS warning lamp • Brake warning lamp	Condition	Description protection function
C118E	ON	When temporary decrease in accumulator fluid pressure. **NOTE:** System is not malfunction.	The following functions are suspended temporarily • VDC function • TCS function • ABS function • EBD function • hill start assist function • Brake limited slip differential (BLSD) function

NOTE:
DTC “C1111” is detected in self-diagnosis results of “ABS” when the accumulator system has a malfunction.

DTC Inspection Priority Chart

INFOID:0000000009012453

When multiple DTCs are displayed simultaneously, check one by one depending on the following priority list.

Priority	Detected item (DTC)
1	• U1000 CAN COMM CIRCUIT
2	• C1170 VARIANT CODING

Priority	Detected item (DTC)
3	• C1118 4WD SYSTEM* • C1130 ENGINE SIGNAL 1 • C1144 ST ANG SEN SIGNAL
4	• C1109 BATTERY VOLTAGE [ABNORMAL] • C1111 PUMP MOTOR • C1140 ACTUATOR RLY
5	• C1101 RR RH SENSOR-1 • C1102 RR LH SENSOR-1 • C1103 FR RH SENSOR-1 • C1104 FR LH SENSOR-1 • C1105 RR RH SENSOR-2 • C1106 RR LH SENSOR-2 • C1107 FR RH SENSOR-2 • C1108 FR LH SENSOR-2 • C1115 ABS SENSOR [ABNORMAL SIGNAL] • C1116 STOP LAMP SW • C1120 FR LH IN ABS SOL • C1121 FR LH OUT ABS SOL • C1122 FR RH IN ABS SOL • C1123 FR RH OUT ABS SOL • C1124 RR LH IN ABS SOL • C1125 RR LH OUT ABS SOL • C1126 RR RH IN ABS SOL • C1127 RR RH OUT ABS SOL • C1142 PRESS SEN CIRCUIT • C1143 ST ANG SEN CIRCUIT • C1145 YAW RATE SENSOR • C1146 SIDE G-SEN CIRCUIT • C1160 DECEL G SEN SET • C1164 CV 1 • C1165 CV 2 • C1166 SV 1 • C1167 SV 2
6	• C1155 BR FLUID LEVEL LOW • C118E ACCUMULATOR PRESS

*: Models with 4WD system

DTC Index

INFOID:0000000009012454

DTC	Items (CONSULT screen terms)	Reference
C1101	RR RH SENSOR-1	BRC-66, "DTC Logic"
C1102	RR LH SENSOR-1	
C1103	FR RH SENSOR-1	
C1104	FR LH SENSOR-1	
C1105	RR RH SENSOR-2	BRC-69, "DTC Logic"
C1106	RR LH SENSOR-2	
C1107	FR RH SENSOR-2	
C1108	FR LH SENSOR-2	
C1109	BATTERY VOLTAGE [ABNORMAL]	BRC-74, "DTC Logic"
C1111	PUMP MOTOR	BRC-77, "DTC Logic"
C1115	ABS SENSOR [ABNORMAL SIGNAL]	BRC-79, "DTC Logic"
C1116	STOP LAMP SW	BRC-84, "DTC Logic"
C1118*	4WD SYSTEM	BRC-94, "DTC Logic"
C1120	FR LH IN ABS SOL	BRC-95, "DTC Logic"

DTC	Items (CONSULT screen terms)	Reference
C1121	FR LH OUT ABS SOL	BRC-97, "DTC Logic"
C1122	FR RH IN ABS SOL	BRC-95, "DTC Logic"
C1123	FR RH OUT ABS SOL	BRC-97, "DTC Logic"
C1124	RR LH IN ABS SOL	BRC-95, "DTC Logic"
C1125	RR LH OUT ABS SOL	BRC-97, "DTC Logic"
C1126	RR RH IN ABS SOL	BRC-95, "DTC Logic"
C1127	RR RH OUT ABS SOL	BRC-97, "DTC Logic"
C1130	ENGINE SIGNAL 1	BRC-99, "DTC Logic"
C1140	ACTUATOR RLY	BRC-100, "DTC Logic"
C1142	PRESS SEN CIRCUIT	BRC-102, "DTC Logic"
C1143	ST ANG SEN CIRCUIT	BRC-104, "DTC Logic"
C1144	ST ANG SEN SIGNAL	BRC-106, "DTC Logic"
C1145	YAW RATE SENSOR	BRC-107, "DTC Logic"
C1146	SIDE G-SEN CIRCUIT	
C1155	BR FLUID LEVEL LOW	BRC-111, "DTC Logic"
C1160	DECEL G SEN SET	BRC-114, "DTC Logic"
C1164	CV 1	BRC-115, "DTC Logic"
C1165	CV 2	
C1166	SV 1	BRC-117, "DTC Logic"
C1167	SV 2	
C1170	VARIANT CODING	BRC-119, "DTC Logic"
C118E	ACCUMULATOR PRESS	BRC-120, "DTC Logic"
U1000	CAN COMM CIRCUIT	BRC-121, "DTC Logic"

*: Models with 4WD system

WIRING DIAGRAM

BRAKE CONTROL SYSTEM

Wiring Diagram

INFOID:0000000009012455

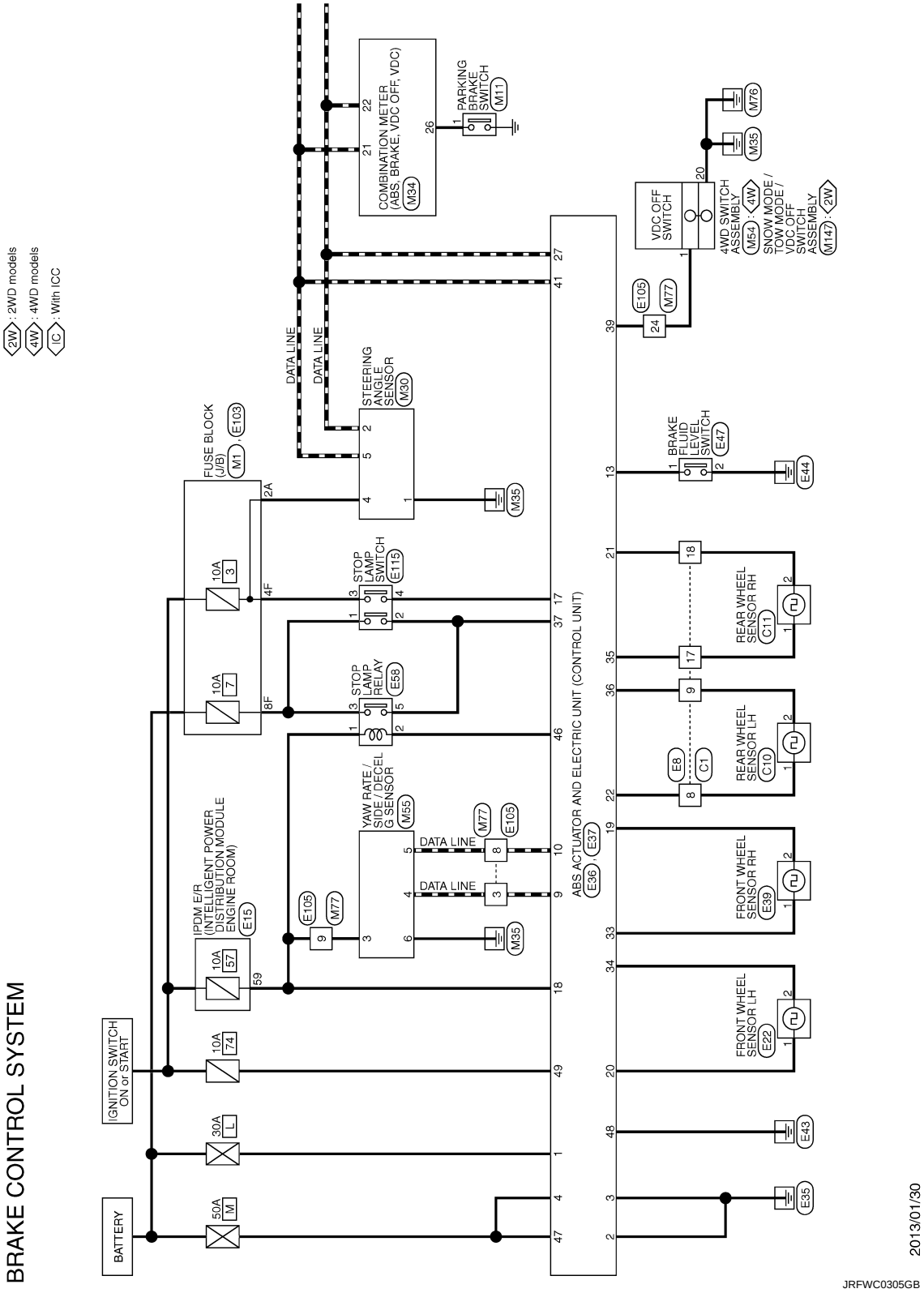

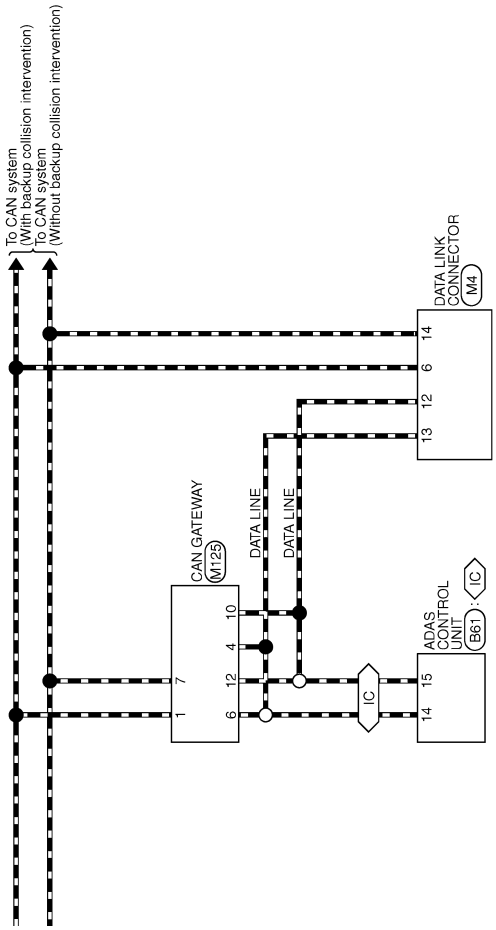

JRFWC0306GB

BRAKE CONTROL SYSTEM

Connector No.	B61
Connector Name	ADAS CONTROL UNIT
Connector Type	TH16FW-NH

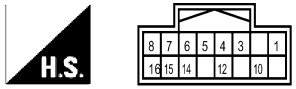

Terminal No.	Color Of Wire	Signal Name [Specification]
1	V/W	WARNING SYSTEMS SW
3	R/Y	IBA OFF SW
4	LG/B	WARNING SYSTEMS ON IND
5	R	BRAKE HOLD RLY DRIVE SIGNAL
6	B	GND
7	L	ITS COMM-H
8	Y	ITS COMM-L
10	O	BCI SW
12	G/R	WARNING BUZZER
14	L	CAN-H
15	P	CAN-L
16	W/G	IGNITION

Connector No.	C1
Connector Name	WIRE TO WIRE
Connector Type	SAA36FB-RS10-SJZ2

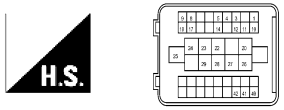

Terminal No.	Color Of Wire	Signal Name [Specification]
1	Y	-
3	SB	-
4	L/Y	-
5	R	-
8	V	-
9	P	-
10	BR/Y	-
11	Y/V	-
12	V/W	-
14	Y/L	-
17	BR	-
18	R/O	-
20	G/W	-
22	L/W	-
23	B	-
24	Y/G	-
25	R	-
26	SB	-
27	R/G	-
28	V	-
29	B	-
40	LG/R	-
41	R/G	-
42	B/R	-

Connector No.	C10
Connector Name	REAR WHEEL SENSOR LH
Connector Type	RH02FGY

Terminal No.	Color Of Wire	Signal Name [Specification]
1	V	-
2	P	-

Connector No.	C11
Connector Name	REAR WHEEL SENSOR RH
Connector Type	RH02FGY

Terminal No.	Color Of Wire	Signal Name [Specification]
1	BR	-
2	R/O	-

Connector No.	E8
Connector Name	WIRE TO WIRE
Connector Type	SAA36MB-RS10-SJZ2

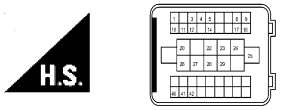

Terminal No.	Color Of Wire	Signal Name [Specification]
1	Y	-
3	SB	-
4	L/Y	-
5	R	-
8	V	-
9	P	-
10	BR/Y	-
11	Y/V	-
12	V/W	-
14	Y/L	-
17	BR	-
18	R/O	-
20	G/W	-
22	L/W	-
23	B	-
24	Y/G	-
25	R	-
26	SB	-
27	R/G	-
28	V	-
29	B	-
40	LG/R	-
41	R/G	-
42	B/R	-

Connector No.	E15
Connector Name	IPDM E/R (INTELLIGENT POWER DISTRIBUTION MODULE ENGINE ROOM)
Connector Type	NS16FW-CS

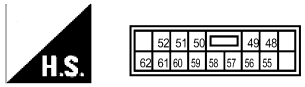

Terminal No.	Color Of Wire	Signal Name [Specification]
48	BR	-
49	R	-
50	LG/B	-
51	BR/Y	-
52	W	-
55	O	-
56	L	-
57	V	-
58	BR/R	-
59	W/B	-
60	V/R	-
61	W	-
62	SB	-

JRFWC0651GB

BRAKE CONTROL SYSTEM

Connector No.	E22
Connector Name	FRONT WHEEL SENSOR LH
Connector Type	RH02FB

Terminal No.	Color Of Wire	Signal Name [Specification]
1	SB	-
2	G	-

Connector No.	E36
Connector Name	ABS ACTUATOR AND ELECTRIC UNIT (CONTROL UNIT)
Connector Type	SAZ42FB-SJZ4

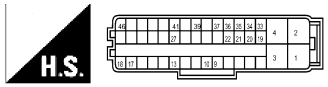

Terminal No.	Color Of Wire	Signal Name [Specification]
1	G	BAT
2	B	GND
3	B	GND
4	W	MOTOR SUPPLY
9	R/B	YAW RATE / SIDE / DECEL G SENSOR COMMUNICATION-H
10	P/B	YAW RATE / SIDE / DECEL G SENSOR COMMUNICATION-L
13	GR	BRAKE FLUID LEVEL SW
17	L/R	STP2
18	W/B	IGN
19	O	DS FR
20	SB	DP FL
21	R/O	DS RR
22	V	DP RL
27	P	CAN-L
33	LG	DP FR
34	G	DS FL
35	BR	DP RR
36	P	DS RL
37	R	STP
39	L/W	VDC OFF SW
41	L	CAN-H
46	W	STOP LAMP SW ON

Connector No.	E37
Connector Name	ABS ACTUATOR AND ELECTRIC UNIT (CONTROL UNIT)
Connector Type	SAZ02FB-SJZ2

Terminal No.	Color Of Wire	Signal Name [Specification]
47	W	MTR_POWER-2
48	B	GND_3
49	O	IGN-2

Connector No.	E39
Connector Name	FRONT WHEEL SENSOR RH
Connector Type	RH02FB

Terminal No.	Color Of Wire	Signal Name [Specification]
1	LG	-
2	O	-

Connector No.	E47
Connector Name	BRAKE FLUID LEVEL SWITCH
Connector Type	RH02FB

Terminal No.	Color Of Wire	Signal Name [Specification]
1	GR	-
2	B	-

Connector No.	E58
Connector Name	STOP LAMP RELAY
Connector Type	MS02FL-M2-LC

Terminal No.	Color Of Wire	Signal Name [Specification]
1	W/B	-
2	W	-
3	L/B	-
5	R	-

Connector No.	E103
Connector Name	FUSE BLOCK (J/B)
Connector Type	NS16FW-CS

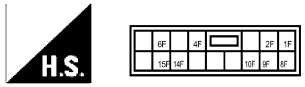

Terminal No.	Color Of Wire	Signal Name [Specification]
10F	G	-
14F	Y	-
15F	G	-
1F	W/B	-
2F	R	-
4F	G	-
6F	Y/G	-
8F	L/B	-
9F	Y	-

Connector No.	E105
Connector Name	WIRE TO WIRE
Connector Type	TH80MW-CS16-TM4

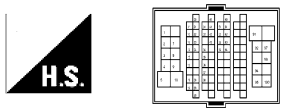

Terminal No.	Color Of Wire	Signal Name [Specification]
1	L	-
2	L/W	-
3	R/B	-
4	L	-
5	Y	-
7	W/G	-
8	P/B	-
9	W/B	-
10	G	-
11	L	-
12	P	-

JRFWC0652GB

BRAKE CONTROL SYSTEM

13	P/B	-
14	BR	-
15	L/B	-
16	SB	-
18	BR	-
19	Y/G	-
20	BR/Y	-
21	Y/V	-
22	L	-
23	Y	-
24	L/W	-
28	O	-
29	R/W	-
30	L/B	-
31	Y	-
32	GR/R	-
34	Y	-
35	R	-
36	B/R	-
37	G/Y	-
38	G	-
40	SB	-
41	W/R	-
42	R	-
43	V	-
51	L/O	-
52	BR/W	-
53	BR/Y	-
54	GR/L	-
60	W	-
61	B	-
62	R	-
63	G	-
64	SHIELD	-
91	BR	-
92	L/W	-
94	Y/B	-
95	G/R	-
97	R	-
98	G/B	-
100	W/R	-

Connector No.	E115
Connector Name	STOP LAMP SWITCH
Connector Type	M04FW-LC

Terminal No.	Color Of Wire	Signal Name [Specification]
1	L/B	-
2	R	-
3	G	-
4	L/R	-

Connector No.	M1
Connector Name	FUSE BLOCK (J/B)
Connector Type	NS06FW-M2

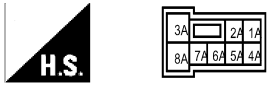

Terminal No.	Color Of Wire	Signal Name [Specification]
1A	Y	-
2A	GR	-
3A	W	-
4A	Y/G	-
5A	V	-
6A	L/W	-
7A	LG	-
8A	W	-

Connector No.	M4
Connector Name	DATA LINK CONNECTOR
Connector Type	BD16FW

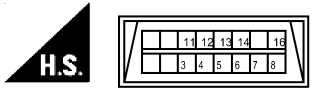

Terminal No.	Color Of Wire	Signal Name [Specification]
3	LG	-
4	B	-
5	B	-
6	L	-
7	SB	-
8	GR	-
11	SB	-
12	R	-
13	L	-
14	P	-
16	Y	-

Connector No.	M11
Connector Name	PARKING BRAKE SWITCH
Connector Type	P01FB-A

Terminal No.	Color Of Wire	Signal Name [Specification]
1	W	-

Connector No.	M30
Connector Name	STEERING ANGLE SENSOR
Connector Type	TH08FW-NH

Terminal No.	Color Of Wire	Signal Name [Specification]
1	B	-
2	P	-
4	GR	-
5	L	-

Connector No.	M34
Connector Name	COMBINATION METER
Connector Type	TH40FW-NH

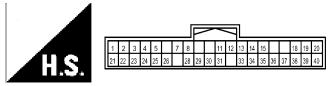

Terminal No.	Color Of Wire	Signal Name [Specification]
1	Y	BATTERY POWER SUPPLY
2	GR	IGNITION SIGNAL
3	B	GROUND
4	B	ILL GND
5	B	ILL CONTROL OUTPUT
7	R	TOW MODE SIGNAL
8	P/L	TRIP RESET SWITCH SIGNAL
11	G	ENTER SWITCH SIGNAL
12	O	SELECT SWITCH SIGNAL
13	W/R	ILLUMINATION CONTROL SWITCH SIGNAL (+)
14	R	ILLUMINATION CONTROL SWITCH SIGNAL (-)
15	R/W	AIR BAG SIGNAL
18	W/R	AMBIENT SENSOR SIGNAL
19	V/W	A/C AUTO AMP. CONNECTION RECOGNITION SIGNAL
20	B	AMBIENT SENSOR GROUND
21	L	CAN-H

JRFWC0653GB

BRAKE CONTROL SYSTEM

22	P	CAN-L
23	B	GROUND
24	V	FUEL LEVEL SENSOR GROUND
25	O/L	ALTERNATOR SIGNAL
26	W	PARKING BRAKE SWITCH SIGNAL
28	GR/R	SECURITY SIGNAL
29	BR	WASHER LEVEL SWITCH SIGNAL
30	SB	VEHICLE SPEED SIGNAL (2-PULSE)
31	BR/W	VEHICLE SPEED SIGNAL (8-PULSE)
33	W	SNOW MODE SIGNAL
34	BR/Y	FUEL LEVEL SENSOR SIGNAL
35	O/B	SEAT BELT BUCKLE SWITCH SIGNAL (DRIVER SIDE)
36	G/Y	PASSENGER SEAT BELT WARNING SIGNAL
37	R/Y	NON-MANUAL MODE SIGNAL
38	L/W	MANUAL MODE SHIFT DOWN SIGNAL
39	Y/B	MANUAL MODE SHIFT UP SIGNAL
40	G/W	MANUAL MODE SIGNAL

Connector No.	M54
Connector Name	4WD SWITCH ASSEMBLY
Connector Type	TH24FW-NH

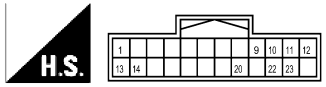

Terminal No.	Color Of Wire	Signal Name [Specification]
1	L/W	VDC OFF SW
9	W/R	AUTO SW
10	R	4H SW
11	V	4L SW
12	GR	IGN
13	L/W	LIGHT SW
14	B/O	ILL CONT
20	B	GND
22	W	SNOW SW
23	R	TOW

Connector No.	M55
Connector Name	YAW RATE / SIDE / DECEL G SENSOR
Connector Type	SAZ06FB

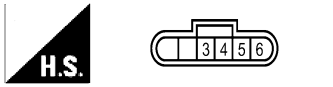

Terminal No.	Color Of Wire	Signal Name [Specification]
3	W/B	-
4	R/B	-
5	P/B	-
6	B	-

Connector No.	M77
Connector Name	WIRE TO WIRE
Connector Type	TH80FW-CS16-TM4

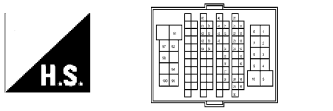

Terminal No.	Color Of Wire	Signal Name [Specification]
1	W	-
2	L/W	-
3	R/B	-
4	L	-
5	Y	-
6	SB	-
7	W/G	-
8	P/B	-
9	W/B	-
10	G	-
11	L	-
12	P	-
13	P/B	-
14	BR	-
15	O/L	-
16	SB	-
18	BR	-
19	Y/G	-
20	BR/Y	-
21	V	-
22	L	-
23	Y	-
24	L/W	-
28	O	-
29	R/W	-
30	O/L	-
31	Y	-
32	GR/R	-
34	Y	-
35	R	-
36	B/O	-
37	G/Y	-
38	G	-
40	SB	-
41	W/R	-
42	R	-
43	V	-
51	L/O	-
52	BR/W	-
53	BR/Y	-
54	GR/L	-
60	W	-
61	B	-
62	G	-
63	R	-
64	SHIELD	-
91	BR	-
92	L/W	-
94	Y/B	-
95	L/R	-
97	R	-
98	O/L	-
100	W/B	-

Connector No.	M125
Connector Name	CAN GATEWAY
Connector Type	TH12FW-NH

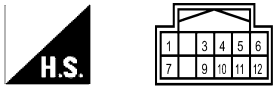

Terminal No.	Color Of Wire	Signal Name [Specification]
1	L	CAN-H
3	Y	BATTERY
4	L	CAN-H
5	B	GND
6	L	CAN-H
7	P	CAN-L
9	GR	IGNITION
10	R	CAN-L
11	B	GND
12	R	CAN-L

Connector No.	M147
Connector Name	SNOW MODE / TOW MODE / VDC OFF SWITCH ASSEMBLY
Connector Type	TH24FW-NH

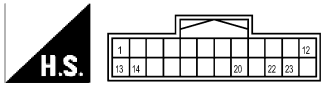

Terminal No.	Color Of Wire	Signal Name [Specification]
1	L/W	VDC OFF SW
12	GR	IGN
13	L/W	LIGHT SW
14	B/O	ILL CONT
20	B	GND
22	W	SNOW SW
23	R	TOW

JRFWC0654GB

BASIC INSPECTION

DIAGNOSIS AND REPAIR WORK FLOW

Work Flow

INFOID:0000000009012456

DETAILED FLOW

1.INTERVIEW FROM THE CUSTOMER

Clarify customer complaints before inspection. First of all, perform an interview utilizing BRC-59, "Diagnostic Work Sheet" and reproduce the symptom as well as fully understand it. Ask customer about his/her complaints carefully. Check symptoms by driving vehicle with customer, if necessary.

CAUTION:

Customers are not professional. Never guess easily like “maybe the customer means that...,” or “ maybe the customer mentions this symptom”.

>> GO TO 2.

2.CHECK SYMPTOM

Reproduce the symptom that is indicated by the customer, based on the information from the customer obtained by interview. Also check that the symptom is not caused by fail-safe mode. Refer to BRC-46, "Fail-safe".

CAUTION:

When the symptom is caused by normal operation, fully inspect each portion and obtain the understanding of customer that the symptom is not caused by a malfunction.

>> GO TO 3.

3.PERFORM THE SELF-DIAGNOSIS

With CONSULT

Perform self-diagnosis.

Is DTC detected?

YES >> Record or print self-diagnosis results and freeze frame data (FFD). GO TO 4.

NO >> GO TO 6.

4.RECHECK THE SYMPTOM

With CONSULT

1. Erase self-diagnostic results for “ABS”.
2. Perform DTC confirmation procedures for the error-detected system.

   NOTE:

   If some DTCs are detected at the some time, determine the order for performing the diagnosis based on BRC-49, "DTC Inspection Priority Chart" [ABS actuator and electric unit (control unit)].

Is any DTC detected?

YES >> GO TO 5.

NO >> Check harness and connectors based on the information obtained by interview. Refer to GI-43, "Intermittent Incident".

5.REPAIR OR REPLACE ERROR-DETECTED PART

- Repair or replace error-detected parts.
- Reconnect part or connector after repairing or replacing.
- When DTC is detected, erase self-diagnostic result for “ABS”.

>> GO TO 7.

6.IDENTIFY ERROR-DETECTED SYSTEM BY SYMPTOM DIAGNOSIS

Estimate error-detected system based on symptom diagnosis and perform inspection.

Can the error-detected system be identified?

YES >> GO TO 7.
NO >> Check harness and connectors based on the information obtained by interview. Refer to GI-43, "Intermittent Incident".

7. FINAL CHECK

With CONSULT
1. Check the reference value for “ABS”.
2. Recheck the symptom and check that the symptom is not reproduced on the same conditions.

Is the symptom reproduced?

YES >> GO TO 3.
NO >> INSPECTION END

Diagnostic Work Sheet

INFOID:0000000009012457

Description

- In general, customers have their own criteria for a problem. Therefore, it is important to understand the symptom and status well enough by asking the customer about his/her concerns carefully. To systemize all the information for the diagnosis, prepare the interview sheet referring to the interview points.
- In some cases, multiple conditions that appear simultaneously may cause a DTC to be detected.

INTERVIEW SHEET SAMPLE

Interview sheet					
Customer name	MR/MS	Registration number		Initial year registration	
		Vehicle type		VIN	
Storage date		Engine		Mileage	km (Mile)
Symptom		☐ Does not operate ( ) function			
		☐ Warning lamp for ( ) turns ON.			
		☐ Noise		☐ Vibration	
		☐ Other ( )			
First occurrence		☐ Recently ☐ Other ( )			
Frequency of occurrence		☐ Always ☐ Under a certain conditions of ☐ Sometimes (time(s)/day)			
Climate conditions		☐ Irrelevant			
	Weather	☐ Fine ☐ Cloud ☐ Rain ☐Snow ☐ Others ( )			
	Temperature	☐ Hot ☐Warm ☐ Cool ☐ Cold ☐ Temperature [Approx. °C (°F)]			
	Relative humidity	☐ High ☐ Moderate ☐ Low			
Road conditions		☐ Urban area ☐ Suburb area ☐ Highway ☐ Mountainous road (uphill or downhill) ☐ Rough road			
Operating condition, etc.		☐Irrelevant ☐When engine starts ☐ During idling ☐ During driving ☐ During acceleration ☐ At constant speed driving ☐ During deceleration ☐ During cornering (right curve or left curve) ☐ When steering wheel is steered (to right or to left)			

Interview sheet

Customer name	MR/MS	Registration number		Initial year registration	
		Vehicle type		VIN	
Storage date		Engine		Mileage	km (Mile)
Other conditions					

Memo

ADDITIONAL SERVICE WHEN REPLACING ABS ACTUATOR AND ELECTRIC UNIT (CONTROL UNIT)

Description

INFOID:0000000009012458

When replaced the ABS actuator and electric unit (control unit), perform decel G sensor calibration. Refer to BRC-64, "Work Procedure".

ADJUSTMENT OF STEERING ANGLE SENSOR NEUTRAL POSITION

Description

INFOID:0000000009012459

Always adjust the neutral position of steering angle sensor before driving when the following operation is performed.

×: Required —: Not required

Procedure	Adjust the neutral position of steering angle sensor
Removing/ installing ABS actuator and electric unit (control unit)	—
Replacing ABS actuator and electric unit (control unit)	—
Removing/installing steering angle sensor	×
Replacing steering angle sensor	×
Removing/installing steering components	×
Replacing steering components	×
Removing/installing suspension components	×
Replacing suspension components	×
Removing/installing tire	—
Replacing tire	—
Tire rotation	—
Adjusting wheel alignment.	×

Work Procedure

INFOID:0000000009012460

ADJUST THE NEUTRAL POSITION OF STEERING ANGLE SENSOR

CAUTION:

Always use CONSULT when adjusting the neutral position of steering angle sensor. (It cannot be adjusted other than with CONSULT.)

1. CHECK THE VEHICLE STATUS

Stop vehicle with front wheels in the straight-ahead position.

Does the vehicle stay in the straight-ahead position?

YES >> GO TO 2.
NO >> Steer the steering wheel to the straight-ahead position. Stop the vehicle.

2. ADJUST NEUTRAL POSITION OF STEERING ANGLE SENSOR

With CONSULT

1. Turn the ignition switch ON.
   CAUTION:
   Never start engine.
2. Select “ABS”, “WORK SUPPORT” and “ST ANGLE SENSOR ADJUSTMENT” in this order.
3. Select “START”.
   CAUTION:
   Never touch steering wheel while adjusting steering angle sensor.
4. After approx. 10 seconds, select “END”.
5. Turn ignition switch OFF and then turn it ON again.
   CAUTION:
   Be sure to perform the operation above.

>> GO TO 3.

3. CHECK DATA MONITOR

With CONSULT

1. The vehicle is either pointing straight ahead or the vehicle needs to be moved. Stop when it is pointing straight ahead.

2. Select “ABS”, “DATA MONITOR”, “ECU INPUT SIGNALS” and “STR ANGLE SIG” in the order. Check that the signal is within the specified value.

STR ANGLE SIG : 0±2.5°

Is the inspection result normal?

YES >> GO TO 4.
NO >> GO TO 1.

4. ERASE SELF-DIAGNOSIS MEMORY

With CONSULT
Erase Self-diagnosis result of “ABS”.

Are the memories erased?

YES >> INSPECTION END
NO >> Check the items indicated by the self-diagnosis.

CALIBRATION OF DECEL G SENSOR

Description

INFOID:0000000009012461

CAUTION:
Always perform the decel G sensor calibration before driving when the following operation is performed.
NOTE:
Yaw rate/side/decel G sensor calibration is performed when performing the decel G sensor calibration.

×: Required —: Not required

Procedure	Decel G sensor calibration
Removing/ installing ABS actuator and electric unit (control unit)	—
Replacing ABS actuator and electric unit (control unit)	×
Removing/installing steering components	—
Replacing steering components	—
Removing/installing suspension components	—
Replacing suspension components	—
Removing/installing tire	—
Replacing tire	—
Tire rotation	—
Adjusting wheel alignment.	—
Removing/installing yaw rate/side/decel G sensor	×
Replacing yaw rate/side/decel G sensor	×

Work Procedure

INFOID:0000000009012462

Decel G sensor calibration

CAUTION:
Always use CONSULT for the decel G sensor calibration. (It cannot be adjusted other than with CONSULT.)
NOTE:
Yaw rate/side/decel G sensor calibration is performed when performing the decel G sensor calibration.

1. CHECK THE VEHICLE STATUS

1. Steer the steering wheel to the straight-ahead position. Stop the vehicle on level surface.
2. Stop the engine.
3. Turn the ignition switch OFF.

Is the vehicle stopped in the straight-ahead position on level surface?

YES >> GO TO 2.
NO >> Steer the steering wheel to the straight-ahead position. Stop the vehicle on level surface.

2. PERFORM DECEL G SENSOR CALIBRATION

CAUTION:
- **Never allow passenger or load on the vehicle.**
- **Never apply vibration to the vehicle body when opening or closing door during calibration.**

With CONSULT
1. Turn the ignition switch ON.
   CAUTION:
   Never start engine.
2. Select “ABS”, “WORK SUPPORT”, “DECEL G-SENSOR CALIBRATION” in this order.
3. Select “START”.
4. After approx. 10 seconds, select “END”.
5. Turn ignition switch OFF and then turn it ON again.
   CAUTION:
   Be sure to perform the operation above.

>> GO TO 3.

3. CHECK DATA MONITOR

With CONSULT

1. Drive the vehicle. Steer the steering wheel to the straight-ahead position. Stop the vehicle on level surface.
2. Select “ABS”, “DATA MONITOR”, “ECU INPUT SIGNALS” and “DECEL G-SENSOR” in this order. Check that the signal is within the specified value.

DECEL G-SENSOR : Approx. 0 G

Is the inspection result normal?

YES >> GO TO 4.
NO >> GO TO 1.

4. ERASE SELF-DIAGNOSIS MEMORY

With CONSULT

Erase Self-diagnosis result of “ABS”.

Are the memories erased?

YES >> GO TO 5.
NO >> Check the items indicated by the self-diagnosis.

5. PERFORM DECEL G SENSOR CALIBRATION (TRANSMISSION)

Perform decel G sensor calibration. Refer to TM-97, "Work Procedure".

>> INSPECTION END

DTC/CIRCUIT DIAGNOSIS

C1101, C1102, C1103, C1104 WHEEL SENSOR

DTC Logic

INFOID:0000000009012463

DTC DETECTION LOGIC

DTC	Display Item	Malfunction detected condition	Possible causes
C1101	RR RH SENSOR-1	When an open circuit is detected in rear RH wheel sensor circuit.	• Harness or connector • Wheel sensor • ABS actuator and electric unit (control unit)
C1102	RR LH SENSOR-1	When an open circuit is detected in rear LH wheel sensor circuit.	
C1103	FR RH SENSOR-1	When an open circuit is detected in front RH wheel sensor circuit.	
C1104	FR LH SENSOR-1	When an open circuit is detected in front LH wheel sensor circuit.	

DTC CONFIRMATION PROCEDURE

1. PRECONDITIONING

If “DTC CONFIRMATION PROCEDURE” has been previously conducted, always turn ignition switch OFF and wait at least 10 seconds before conducting the next test.

>> GO TO 2.

2. CHECK DTC DETECTION

With CONSULT
1. Turn the ignition switch OFF to ON.
2. Drive the vehicle at approx. 30 km/h (19 MPH) or more for approx. 1 minute.
3. Stop the vehicle.
4. Perform self-diagnosis for “ABS”.

Is DTC “C1101”, “C1102”, “C1103” or “C1104” detected?

YES >> Proceed to diagnosis procedure. Refer to BRC-66, "Diagnosis Procedure".
NO >> INSPECTION END

Diagnosis Procedure

INFOID:0000000009012464

CAUTION:
Never check between wheel sensor harness connector terminals.

1. CHECK WHEEL SENSOR

1. Turn the ignition switch OFF.
2. Check wheel sensor for damage.

Is the inspection result normal?

YES >> GO TO 3.
NO >> GO TO 2.

2. REPLACE WHEEL SENSOR (1)

With CONSULT
1. Replace wheel sensor.
- Front: Refer to BRC-143, "FRONT WHEEL SENSOR : Removal and Installation"
- Rear: Refer to BRC-144, "REAR WHEEL SENSOR : Removal and Installation"
2. Erase self-diagnosis result for “ABS”.
3. Turn the ignition switch OFF, and wait 10 seconds or more.
4. Start the engine.
5. Drive the vehicle at approx. 30 km/h (19 MPH) or more for approx. 1 minute.
6. Stop the vehicle.

7. Perform self-diagnosis for “ABS”.

Is DTC “C1101”, “C1102”, “C1103” or “C1104” detected?

YES >> GO TO 3.
NO >> INSPECTION END

3. CHECK CONNECTOR

1. Turn the ignition switch OFF.
2. Check ABS actuator and electric unit (control unit) harness connector for disconnection or looseness.
3. Check wheel sensor harness connector for disconnection or looseness.

Is the inspection result normal?

YES >> GO TO 5.
NO >> Repair or replace error-detected parts, securely lock the connector, and GO TO 4.

4. PERFORM SELF-DIAGNOSIS (1)

With CONSULT

1. Erase self-diagnosis result for “ABS”.
2. Turn the ignition switch OFF, and wait 10 seconds or more.
3. Start the engine.
4. Drive the vehicle at approx. 30 km/h (19 MPH) or more for approx. 1 minute.
5. Stop the vehicle.
6. Perform self-diagnosis for “ABS”.

Is DTC “C1101”, “C1102”, “C1103” or “C1104” detected?

YES >> GO TO 5.
NO >> INSPECTION END

5. CHECK TERMINAL

1. Turn the ignition switch OFF.
2. Disconnect ABS actuator and electric unit (control unit) harness connector and then check ABS actuator and electric unit (control unit) pin terminals for damage or loose connection with harness connector.
3. Disconnect wheel sensor harness connector and check each wheel sensor pin terminals for damage or loose connection with harness connector.

Is the inspection result normal?

YES >> GO TO 7.
NO >> Repair or replace error-detected parts and GO TO 6.

6. PERFORM SELF-DIAGNOSIS (2)

With CONSULT

1. Connect ABS actuator and electric unit (control unit) harness connector.
2. Connect wheel sensor harness connector.
3. Erase self-diagnosis result for “ABS”.
4. Turn the ignition switch OFF, and wait 10 seconds or more.
5. Start the engine.
6. Drive the vehicle at approx. 30 km/h (19 MPH) or more for approx. 1 minute.
7. Stop the vehicle.
8. Perform self-diagnosis for “ABS”.

Is DTC “C1101”, “C1102”, “C1103” or “C1104” detected?

YES >> GO TO 7.
NO >> INSPECTION END

7. CHECK WHEEL SENSOR HARNESS

1. Turn the ignition switch OFF.
2. Disconnect ABS actuator and electric unit (control unit) harness connector.
3. Disconnect wheel sensor harness connector.
4. Check continuity between ABS actuator and electric unit (control unit) harness connector and wheel sensor harness connector. (Check continuity when steering wheel is steered to RH and LH, or center harness in wheel housing is moved.)

Measurement terminal for power supply circuit

ABS actuator and electric unit (control unit)		Wheel sensor		Continuity
Connector	Terminal	Connector	Terminal	
E36	20	E22 (Front LH)	1	Existed
	33	E39 (Front RH)		
	22	C10 (Rear LH)		
	35	C11 (Rear RH)		

Measurement terminal for signal circuit

ABS actuator and electric unit (control unit)		Wheel sensor		Continuity
Connector	Terminal	Connector	Terminal	
E36	34	E22 (Front LH)	2	Existed
	19	E39 (Front RH)		
	36	C10 (Rear LH)		
	21	C11 (Rear RH)		

Is the inspection result normal?

YES >> GO TO 9.
NO >> Repair or replace error-detected parts and GO TO 8.

8. PERFORM SELF-DIAGNOSIS (3)

With CONSULT

1. Connect ABS actuator and electric unit (control unit) harness connector.
2. Connect wheel sensor harness connector.
3. Erase self-diagnosis result for “ABS”.
4. Turn the ignition switch OFF, and wait 10 seconds or more.
5. Start the engine.
6. Drive the vehicle at approx. 30 km/h (19 MPH) or more for approx. 1 minute.
7. Stop the vehicle.
8. Perform self-diagnosis for “ABS”.

Is DTC “C1101”, “C1102”, “C1103” or “C1104” detected?

YES >> GO TO 9.
NO >> INSPECTION END

9. REPLACE WHEEL SENSOR

With CONSULT

1. Replace wheel sensor.
- Front: Refer to BRC-143, "FRONT WHEEL SENSOR : Removal and Installation"
- Rear: Refer to BRC-144, "REAR WHEEL SENSOR : Removal and Installation"
2. Erase self-diagnosis result for “ABS”.
3. Turn the ignition switch OFF, and wait 10 seconds or more.
4. Start the engine.
5. Drive the vehicle at approx. 30 km/h (19 MPH) or more for approx. 1 minute.
6. Stop the vehicle.
7. Perform self-diagnosis for “ABS”.

Is DTC “C1101”, “C1102”, “C1103” or “C1104” detected?

YES >> Replace ABS actuator and electric unit (control unit). Refer to BRC-146, "Removal and Installation".
NO >> INSPECTION END

C1105, C1106, C1107, C1108 WHEEL SENSOR

DTC Logic

INFOID:0000000009012465

DTC DETECTION LOGIC

DTC	Display Item	Malfunction detected condition	Possible causes
C1105	RR RH SENSOR-2	• When power supply voltage of rear RH wheel sensor is low. • When distance between rear RH wheel sensor and rear RH wheel sensor rotor is large. • When installation of rear RH wheel sensor or rear RH wheel sensor rotor is not normal.	• Harness or connector • Wheel sensor • ABS actuator and electric unit (control unit) • Sensor rotor
C1106	RR LH SENSOR-2	• When power supply voltage of rear LH wheel sensor is low. • When distance between rear LH wheel sensor and rear LH wheel sensor rotor is large. • When installation of rear LH wheel sensor or rear LH wheel sensor rotor is not normal.	
C1107	FR RH SENSOR-2	• When power supply voltage of front RH wheel sensor is low. • When distance between front RH wheel sensor and front RH wheel sensor rotor is large. • When installation of front RH wheel sensor or front RH wheel sensor rotor is not normal.	
C1108	FR LH SENSOR-2	• When power supply voltage of front LH wheel sensor is low. • When distance between front LH wheel sensor and front LH wheel sensor rotor is large. • When installation of front LH wheel sensor or front LH wheel sensor rotor is not normal.	

DTC CONFIRMATION PROCEDURE

1. PRECONDITIONING

If “DTC CONFIRMATION PROCEDURE” has been previously conducted, always turn ignition switch OFF and wait at least 10 seconds before conducting the next test.

>> GO TO 2.

2. CHECK DTC DETECTION

With CONSULT

1. Turn the ignition switch OFF to ON.
2. Drive the vehicle at approx. 30 km/h (19 MPH) or more for approx. 1 minute.
3. Stop the vehicle.
4. Perform self-diagnosis for “ABS”.

Is DTC “C1105”, “C1106”, “C1107” or “C1108” detected?

YES >> Proceed to diagnosis procedure. Refer to BRC-69, "Diagnosis Procedure".
NO >> INSPECTION END

Diagnosis Procedure

INFOID:0000000009012466

CAUTION:
Never check between wheel sensor harness connector terminals.

1. CHECK ABS ACTUATOR AND ELECTRIC UNIT (CONTROL UNIT) POWER SUPPLY SYSTEM

Check ABS actuator and electric unit (control unit) power supply system. Refer to BRC-122, "Diagnosis Procedure".

Is the inspection result normal?

YES >> GO TO 2.

NO >> Repair or replace error-detected parts.

2. CHECK TIRE

1. Turn the ignition switch OFF.
2. Check tire air pressure, wear and size. Refer to WT-68, "Tire Air Pressure".

Is the inspection result normal?

YES >> GO TO 5.
NO >> Adjust air pressure or replace tire and GO TO 3.

3. CHECK DATA MONITOR (1)

With CONSULT
1. Erase self-diagnosis result for “ABS”.
2. Turn the ignition switch OFF, and wait 10 seconds or more.
3. Start the engine.
4. Select “ABS” and “DATA MONITOR”, check “FR LH SENSOR”, “FR RH SENSOR”, “RR LH SENSOR” and “RR RH SENSOR”.
   NOTE:
   Set the “DATA MONITOR” recording speed to “10 msec”.
5. Read a value (wheel speed) of both normal wheel sensors and error-detecting wheel sensor.

Regarding the deference at 30 km/h (19 MPH) between the wheel speed detected by the error detecting wheel sensor and the maximum/minimum wheel speed detected by the normal wheel sensors, is the difference within 5%, respectively?

YES >> GO TO 4.
NO >> GO TO 5.

4. PERFORM SELF-DIAGNOSIS (1)

With CONSULT
1. Drive the vehicle at approx. 30 km/h (19 MPH) or more for approx. 1 minute.
2. Stop the vehicle.
3. Perform self-diagnosis for “ABS”.

Is DTC “C1105”, “C1106”, “C1107” or “C1108” detected?

YES >> GO TO 5.
NO >> INSPECTION END

5. CHECK WHEEL SENSOR

1. Turn the ignition switch OFF.
2. Check wheel sensor for damage.

Is the inspection result normal?

YES >> GO TO 8.
NO >> GO TO 6.

6. REPLACE WHEEL SENSOR (1)

With CONSULT
1. Replace wheel sensor.
- Front: Refer to BRC-143, "FRONT WHEEL SENSOR : Removal and Installation"
- Rear: Refer to BRC-144, "REAR WHEEL SENSOR : Removal and Installation"
2. Erase self-diagnosis result for “ABS”.
3. Turn the ignition switch OFF, and wait 10 seconds or more.
4. Start the engine.
5. Select “ABS” and “DATA MONITOR”, check “FR LH SENSOR”, “FR RH SENSOR”, “RR LH SENSOR” and “RR RH SENSOR”.
   NOTE:
   Set the “DATA MONITOR” recording speed to “10 msec”.
6. Read a value (wheel speed) of both normal wheel sensors and error-detecting wheel sensor.

Regarding the deference at 30 km/h (19 MPH) between the wheel speed detected by the error detecting wheel sensor and the maximum/minimum wheel speed detected by the normal wheel sensors, is the difference within 5%, respectively?

YES >> GO TO 7.

NO >> Replace ABS actuator and electric unit (control unit). Refer to BRC-146, "Removal and Installation".

7. PERFORM SELF-DIAGNOSIS (2)

With CONSULT
1. Drive the vehicle at approx. 30 km/h (19 MPH) or more for approx. 1 minute.
2. Stop the vehicle.
3. Perform self-diagnosis for “ABS”.

Is DTC “C1105”, “C1106”, “C1107” or “C1108” detected?

YES >> Replace ABS actuator and electric unit (control unit). Refer to BRC-146, "Removal and Installation".
NO >> INSPECTION END

8. CHECK CONNECTOR

1. Turn the ignition switch OFF.
2. Check ABS actuator and electric unit (control unit) harness connector for disconnection or looseness.
3. Check wheel sensor harness connector for disconnection or looseness.

Is the inspection result normal?

YES >> GO TO 11.
NO >> Repair or replace error-detected parts, securely lock the connector, and GO TO 9.

9. CHECK DATA MONITOR (2)

With CONSULT
1. Erase self-diagnosis result for “ABS”.
2. Turn the ignition switch OFF, and wait 10 seconds or more.
3. Start the engine.
4. Select “ABS” and “DATA MONITOR”, check “FR LH SENSOR”, “FR RH SENSOR”, “RR LH SENSOR” and “RR RH SENSOR”.
   NOTE:
   Set the “DATA MONITOR” recording speed to “10 msec”.
5. Read a value (wheel speed) of both normal wheel sensors and error-detecting wheel sensor.

Regarding the deference at 30 km/h (19 MPH) between the wheel speed detected by the error detecting wheel sensor and the maximum/minimum wheel speed detected by the normal wheel sensors, is the difference within 5%, respectively?

YES >> GO TO 10.
NO >> GO TO 11.

10. PERFORM SELF-DIAGNOSIS (3)

With CONSULT
1. Drive the vehicle at approx. 30 km/h (19 MPH) or more for approx. 1 minute.
2. Stop the vehicle.
3. Perform self-diagnosis for “ABS”.

Is DTC “C1105”, “C1106”, “C1107” or “C1108” detected?

YES >> GO TO 11.
NO >> INSPECTION END

11. CHECK TERMINAL

1. Turn the ignition switch OFF.
2. Disconnect ABS actuator and electric unit (control unit) harness connector and then check ABS actuator and electric unit (control unit) pin terminals for damage or loose connection with harness connector.
3. Disconnect wheel sensor harness connector and check each wheel sensor pin terminals for damage or loose connection with harness connector.

Is the inspection result normal?

YES >> GO TO 14.
NO >> Repair or replace error-detected parts and GO TO 12.

12. CHECK DATA MONITOR (3)

With CONSULT

1. Connect ABS actuator and electric unit (control unit) harness connector.
2. Connect wheel sensor harness connector.
3. Erase self-diagnosis result for “ABS”.
4. Turn the ignition switch OFF, and wait 10 seconds or more.
5. Start the engine.
6. Select “ABS” and “DATA MONITOR”, check “FR LH SENSOR”, “FR RH SENSOR”, “RR LH SENSOR” and “RR RH SENSOR”.
   NOTE:
   Set the “DATA MONITOR” recording speed to “10 msec”.
7. Read a value (wheel speed) of both normal wheel sensors and error-detecting wheel sensor.

Regarding the deference at 30 km/h (19 MPH) between the wheel speed detected by the error detecting wheel sensor and the maximum/minimum wheel speed detected by the normal wheel sensors, is the difference within 5%, respectively?

YES >> GO TO 13.
NO >> GO TO 14.

13. PERFORM SELF-DIAGNOSIS (4)

With CONSULT
1. Drive the vehicle at approx. 30 km/h (19 MPH) or more for approx. 1 minute.
2. Stop the vehicle.
3. Perform self-diagnosis for “ABS”.

Is DTC “C1105”, “C1106”, “C1107” or “C1108” detected?

YES >> GO TO 14.
NO >> INSPECTION END

14. CHECK WHEEL SENSOR HARNESS

1. Turn the ignition switch OFF.
2. Disconnect ABS actuator and electric unit (control unit) harness connector.
3. Disconnect wheel sensor harness connector.
4. Check continuity between ABS actuator and electric unit (control unit) harness connector and the ground.

ABS actuator and electric unit (control unit)		—	Continuity
Connector	Terminal		
E36	20, 34	Ground	Not existed
	33, 19		
	22, 36		
	35, 21		

Is the inspection result normal?

YES >> GO TO 15.
NO >> Repair or replace error-detected parts and GO TO 15.

15. CHECK DATA MONITOR (4)

With CONSULT
1. Connect ABS actuator and electric unit (control unit) harness connector.
2. Connect wheel sensor harness connector.
3. Erase self-diagnosis result for “ABS”.
4. Turn the ignition switch OFF, and wait 10 seconds or more.
5. Start the engine.
6. Select “ABS” and “DATA MONITOR”, check “FR LH SENSOR”, “FR RH SENSOR”, “RR LH SENSOR” and “RR RH SENSOR”.
   NOTE:
   Set the “DATA MONITOR” recording speed to “10 msec”.
7. Read a value (wheel speed) of both normal wheel sensors and error-detecting wheel sensor.

Regarding the deference at 30 km/h (19 MPH) between the wheel speed detected by the error detecting wheel sensor and the maximum/minimum wheel speed detected by the normal wheel sensors, is the difference within 5%, respectively?

YES >> GO TO 16.

NO >> GO TO 17.

16. PERFORM SELF-DIAGNOSIS (5)

With CONSULT

1. Drive the vehicle at approx. 30 km/h (19 MPH) or more for approx. 1 minute.
2. Stop the vehicle.
3. Perform self-diagnosis for “ABS”.

Is DTC “C1105”, “C1106”, “C1107” or “C1108” detected?

YES >> GO TO 17.
NO >> INSPECTION END

17. REPLACE WHEEL SENSOR

With CONSULT

1. Replace wheel sensor.
- Front: Refer to BRC-143, "FRONT WHEEL SENSOR : Removal and Installation"
- Rear: Refer to BRC-144, "REAR WHEEL SENSOR : Removal and Installation"
2. Erase self-diagnosis result for “ABS”.
3. Turn the ignition switch OFF, and wait 10 seconds or more.
4. Start the engine.
5. Select “ABS” and “DATA MONITOR”, check “FR LH SENSOR”, “FR RH SENSOR”, “RR LH SENSOR” and “RR RH SENSOR”.
   NOTE:
   Set the “DATA MONITOR” recording speed to “10 msec”.
6. Read a value (wheel speed) of both normal wheel sensors and error-detecting wheel sensor.

Regarding the deference at 30 km/h (19 MPH) between the wheel speed detected by the error detecting wheel sensor and the maximum/minimum wheel speed detected by the normal wheel sensors, is the difference within 5%, respectively?

YES >> GO TO 18.
NO >> Replace ABS actuator and electric unit (control unit). Refer to BRC-146, "Removal and Installation".

18. PERFORM SELF-DIAGNOSIS (6)

With CONSULT

1. Drive the vehicle at approx. 30 km/h (19 MPH) or more for approx. 1 minute.
2. Stop the vehicle.
3. Perform self-diagnosis for “ABS”.

Is DTC “C1105”, “C1106”, “C1107” or “C1108” detected?

YES >> Replace ABS actuator and electric unit (control unit). Refer to BRC-146, "Removal and Installation".
NO >> INSPECTION END

C1109 POWER AND GROUND SYSTEM

Description

INFOID:0000000009012467

Ignition power supply is supplied to ABS actuator and electric unit (control unit).

DTC Logic

INFOID:0000000009012468

DTC DETECTION LOGIC

DTC	Display Item	Malfunction detected condition	Possible causes
C1109	BATTERY VOLTAGE [ABNORMAL]	• When ignition voltage is 10 V or less. • When ignition voltage is 16 V or more.	• Harness or connector • ABS actuator and electric unit (control unit) • Fuse • Ignition power supply system • Battery

DTC CONFIRMATION PROCEDURE

1. PRECONDITIONING

If “DTC CONFIRMATION PROCEDURE” has been previously conducted, always turn ignition switch OFF and wait at least 10 seconds before conducting the next test.

>> GO TO 2.

2. CHECK DTC DETECTION

With CONSULT

1. Turn the ignition switch OFF to ON.
2. Drive the vehicle at approx. 30 km/h (19 MPH) or more for approx. 1 minute.
3. Stop the vehicle.
4. Perform self-diagnosis for “ABS”.

Is DTC “C1109” detected?

YES >> Proceed to diagnosis procedure. Refer to BRC-74, "Diagnosis Procedure".
NO >> INSPECTION END

Diagnosis Procedure

INFOID:0000000009012469

1. CHECK ABS ACTUATOR AND ELECTRIC UNIT (CONTROL UNIT) IGNITION POWER SUPPLY (1)

1. Turn the ignition switch OFF.
2. Disconnect ABS actuator and electric unit (control unit) harness connector.
3. Check voltage between ABS actuator and electric unit (control unit) harness connector and ground.

ABS actuator and electric unit (control unit)		—	Voltage
Connector	Terminal		
E36	18	Ground	Approx. 0 V

4. Turn the ignition switch ON.
   CAUTION:
   Never start engine.
5. Check voltage between ABS actuator and electric unit (control unit) harness connector and ground.

ABS actuator and electric unit (control unit)		—	Voltage
Connector	Terminal		
E36	18	Ground	10 – 16 V

Is the inspection result normal?

YES >> GO TO 3.

NO >> GO TO 2.

2. CHECK ABS ACTUATOR AND ELECTRIC UNIT (CONTROL UNIT) IGNITION POWER SUPPLY CIRCUIT (1)

1. Turn the ignition switch OFF.
2. Check 10A fuse (#57).
3. Disconnect IPDM E/R harness connector.
4. Check continuity between ABS actuator and electric unit (control unit) harness connector and IPDM E/R harness connector.

ABS actuator and electric unit (control unit)		IPDM E/R		Continuity
Connector	Terminal	Connector	Terminal	
E36	18	E15	59	Existed

5. Check for continuity between ABS actuator and electric unit (control unit) harness connector and the ground.

ABS actuator and electric unit (control unit)		—	Continuity
Connector	Terminal		
E36	18	Ground	Not existed

Is the inspection result normal?

YES >> Perform trouble diagnosis for ignition power supply. Refer to PG-59, "Wiring Diagram - IGNITION POWER SUPPLY -".
NO >> Repair or replace error-detected parts.

3. CHECK ABS ACTUATOR AND ELECTRIC UNIT (CONTROL UNIT) IGNITION POWER SUPPLY (2)

1. Turn the ignition switch OFF.
2. Check voltage between ABS actuator and electric unit (control unit) harness connector and ground.

ABS actuator and electric unit (control unit)		—	Voltage
Connector	Terminal		
E37	49	Ground	Approx. 0 V

3. Turn the ignition switch ON.
   CAUTION:
   Never start engine.
4. Check voltage between ABS actuator and electric unit (control unit) harness connector and ground.

ABS actuator and electric unit (control unit)		—	Voltage
Connector	Terminal		
E37	49	Ground	10 – 16 V

Is the inspection result normal?

YES >> GO TO 5.
NO >> GO TO 4.

4. CHECK ABS ACTUATOR AND ELECTRIC UNIT (CONTROL UNIT) IGNITION POWER SUPPLY CIRCUIT (2)

1. Turn the ignition switch OFF.
2. Check 10A fuse (#74).
3. Check continuity and short circuit between ABS actuator and electric unit (control unit) harness connector terminal (49) and 10A fuse (#74).

Is the inspection result normal?

YES >> Perform trouble diagnosis for ignition power supply. Refer to PG-59, "Wiring Diagram - IGNITION POWER SUPPLY -".
NO >> Repair or replace error-detected parts.

5. CHECK ABS ACTUATOR AND ELECTRIC UNIT (CONTROL UNIT) GROUND CIRCUIT

1. Turn the ignition switch OFF.
2. Check continuity between ABS actuator and electric unit (control unit) harness connector and ground.

ABS actuator and electric unit (control unit)		—	Continuity
Connector	Terminal		
E36	2	Ground	Existed
	3		
E37	48		

Is the inspection result normal?

YES >> GO TO 6.
NO >> Repair or replace error-detected parts.

6. CHECK TERMINAL

- Check ABS actuator and electric unit (control unit) pin terminals for damage or loose connection with harness connector.
- Check IPDM E/R pin terminals for damage or loose connection with harness connector.

Is the inspection result normal?

YES >> Replace ABS actuator and electric unit (control unit). Refer to BRC-146, "Removal and Installation".
NO >> Repair or replace error-detected parts.

C1111 ABS MOTOR, MOTOR RELAY SYSTEM

DTC Logic

INFOID:0000000009012470

DTC DETECTION LOGIC

DTC	Display Item	Malfunction detected condition	Possible causes
C1111	PUMP MOTOR	• When a malfunction is detected in motor or motor relay. • When a low pressure malfunction is detected in accumulator. • When a malfunction is detected in accumulator pressure sensor.	• Harness or connector • ABS actuator and electric unit (control unit) • Fusible link • Battery power supply system • Motor/accumulator assembly

DTC CONFIRMATION PROCEDURE

1.PRECONDITIONING

If “DTC CONFIRMATION PROCEDURE” has been previously conducted, always turn ignition switch OFF and wait at least 10 seconds before conducting the next test.

>> GO TO 2.

2.CHECK DTC DETECTION

With CONSULT

1. Turn the ignition switch OFF and depress the brake pedal 20 times or more.
2. Start the engine and wait for 3 minutes or more.
3. Stop the vehicle and depress the brake pedal, and then operate the ABS actuator and electric unit (control unit) motor repeats ON and OFF 4 times or more.
4. Perform self-diagnosis for “ABS”.

Is DTC “C1111” detected?

YES >> Proceed to diagnosis procedure. Refer to BRC-77, "Diagnosis Procedure".
NO >> INSPECTION END

Diagnosis Procedure

INFOID:0000000009012471

1.CHECK ABS MOTOR AND MOTOR RELAY POWER SUPPLY

1. Turn the ignition switch OFF.
2. Disconnect ABS actuator and electric unit (control unit) harness connector.
3. Check voltage between ABS actuator and electric unit (control unit) harness connector and ground.

ABS actuator and electric unit (control unit)		—	Voltage
Connector	Terminal		
E36	4	Ground	Battery voltage
E37	47		

4. Turn the ignition switch ON.
   CAUTION:
   Never start engine.
5. Check voltage between ABS actuator and electric unit (control unit) harness connector and ground.

ABS actuator and electric unit (control unit)		—	Voltage
Connector	Terminal		
E36	4	Ground	Battery voltage
E37	47		

Is the inspection result normal?

YES >> GO TO 3.

NO >> GO TO 2.

2. CHECK ABS MOTOR AND MOTOR RELAY POWER SUPPLY CIRCUIT

1. Turn the ignition switch OFF.
2. Check 50A fusible link (M).
3. Check continuity and short circuit between ABS actuator and electric unit (control unit) harness connector terminal (4 or 47) and 50A fusible link (M).

Is the inspection result normal?

YES >> Perform trouble diagnosis for battery power supply. Refer to PG-11, "Wiring Diagram - BATTERY POWER SUPPLY -".
NO >> Repair or replace error-detected parts.

3. CHECK ABS ACTUATOR AND ELECTRIC UNIT (CONTROL UNIT) GROUND CIRCUIT

1. Turn the ignition switch OFF.
2. Check continuity between ABS actuator and electric unit (control unit) harness connector and the ground.

ABS actuator and electric unit (control unit)		—	Continuity
Connector	Terminal		
E36	2	Ground	Existed
	3		
E37	48		

Is the inspection result normal?

YES >> GO TO 4.
NO >> Repair or replace error-detected parts.

4. CHECK MOTOR/ACCUMULATOR ASSEMBLY

Check motor/accumulator assembly. Refer to BR-15, "Inspection".

Is the inspection result normal?

YES >> GO TO 5.
NO >> Replace motor/accumulator assembly. Refer to BR-29, "Removal and Installation" and BR-30, "Disassembly and Assembly".

5. CHECK TERMINAL

Check ABS actuator and electric unit (control unit) pin terminals for damage or loose connection with harness connector.

Is the inspection result normal?

YES >> Replace ABS actuator and electric unit (control unit). Refer to BRC-146, "Removal and Installation".
NO >> Repair or replace error-detected parts.

C1115 WHEEL SENSOR

DTC Logic

INFOID:0000000009012472

DTC DETECTION LOGIC

DTC	Display Item	Malfunction detected condition	Possible causes
C1115	ABS SENSOR [ABNORMAL SIGNAL]	When difference in wheel speed between any wheel and others is detected during the vehicle is driven, because of installation of other tires than specified.	• Harness or connector • Wheel sensor • Sensor rotor • ABS actuator and electric unit (control unit)

DTC CONFIRMATION PROCEDURE

1. PRECONDITIONING

If “DTC CONFIRMATION PROCEDURE” has been previously conducted, always turn ignition switch OFF and wait at least 10 seconds before conducting the next test.

>> GO TO 2.

2. CHECK DTC DETECTION

With CONSULT
1. Turn the ignition switch OFF to ON.
2. Drive the vehicle at approx. 30 km/h (19 MPH) or more for approx. 1 minute.
3. Stop the vehicle.
4. Perform self-diagnosis for “ABS”.

Is DTC “C1115” detected?

YES >> Proceed to diagnosis procedure. Refer to BRC-79, "Diagnosis Procedure".
NO >> INSPECTION END

Diagnosis Procedure

INFOID:0000000009012473

CAUTION:
For wheel sensor, never check between terminals.

1. CHECK ABS ACTUATOR AND ELECTRIC UNIT (CONTROL UNIT) POWER SUPPLY SYSTEM

Check ABS actuator and electric unit (control unit) power supply system. Refer to BRC-122, "Diagnosis Procedure".

Is the inspection result normal?

YES >> GO TO 2.
NO >> Repair or replace error-detected parts.

2. CHECK TIRE

1. Turn the ignition switch OFF.
2. Check tire air pressure, wear and size. Refer to WT-68, "Tire Air Pressure".

Is the inspection result normal?

YES >> GO TO 5.
NO >> Adjust air pressure or replace tire and GO TO 3.

3. CHECK DATA MONITOR (1)

With CONSULT
1. Erase self-diagnosis result for “ABS”.
2. Turn the ignition switch OFF, and wait 10 seconds or more.
3. Start the engine.
4. Select “ABS” and “DATA MONITOR”, check “FR LH SENSOR”, “FR RH SENSOR”, “RR LH SENSOR” and “RR RH SENSOR”.
   NOTE:
   Set the “DATA MONITOR” recording speed to “10 msec”.

5. Read a value (wheel speed) of both normal wheel sensors and error-detecting wheel sensor.

Regarding the deference at 30 km/h (19 MPH) between the wheel speed detected by the error detecting wheel sensor and the maximum/minimum wheel speed detected by the normal wheel sensors, is the difference within 5%, respectively?

YES >> GO TO 4.
NO >> GO TO 5.

4. PERFORM SELF-DIAGNOSIS (1)

With CONSULT
1. Drive the vehicle at approx. 30 km/h (19 MPH) or more for approx. 1 minute.
2. Stop the vehicle.
3. Perform self-diagnosis for “ABS”.

Is DTC “C1115” detected?

YES >> GO TO 5.
NO >> INSPECTION END

5. CHECK WHEEL SENSOR

1. Turn the ignition switch OFF.
2. Check wheel sensor for damage.

Is the inspection result normal?

YES >> GO TO 8.
NO >> GO TO 6.

6. REPLACE WHEEL SENSOR (1)

With CONSULT
1. Replace wheel sensor.
- Front: Refer to BRC-143, "FRONT WHEEL SENSOR : Removal and Installation".
- Rear: Refer to BRC-144, "REAR WHEEL SENSOR : Removal and Installation".
2. Erase self-diagnosis result for “ABS”.
3. Turn the ignition switch OFF, and wait 10 seconds or more.
4. Start the engine.
5. Select “ABS” and “DATA MONITOR”, check “FR LH SENSOR”, “FR RH SENSOR”, “RR LH SENSOR” and “RR RH SENSOR”.
   NOTE:
   Set the “DATA MONITOR” recording speed to “10 msec”.
6. Read a value (wheel speed) of both normal wheel sensors and error-detecting wheel sensor.

Regarding the deference at 30 km/h (19 MPH) between the wheel speed detected by the error detecting wheel sensor and the maximum/minimum wheel speed detected by the normal wheel sensors, is the difference within 5%, respectively?

YES >> GO TO 7.
NO >> Replace ABS actuator and electric unit (control unit). Refer to BRC-146, "Removal and Installation".

7. PERFORM SELF-DIAGNOSIS (2)

With CONSULT
1. Drive the vehicle at approx. 30 km/h (19 MPH) or more for approx. 1 minute.
2. Stop the vehicle.
3. Perform self-diagnosis for “ABS”.

Is DTC “C1115” detected?

YES >> Replace ABS actuator and electric unit (control unit). Refer to BRC-146, "Removal and Installation".
NO >> INSPECTION END

8. CHECK CONNECTOR

1. Turn the ignition switch OFF.
2. Check ABS actuator and electric unit (control unit) harness connector for disconnection or looseness.
3. Check wheel sensor harness connector for disconnection or looseness.

Is the inspection result normal?

YES >> GO TO 11.
NO >> Repair or replace error-detected parts, securely lock the connector, and GO TO 9.

9. CHECK DATA MONITOR (2)

With CONSULT
1. Erase self-diagnosis result for “ABS”.
2. Turn the ignition switch OFF, and wait 10 seconds or more.
3. Start the engine.
4. Select “ABS” and “DATA MONITOR”, check “FR LH SENSOR”, “FR RH SENSOR”, “RR LH SENSOR” and “RR RH SENSOR”.
   NOTE:
   Set the “DATA MONITOR” recording speed to “10 msec”.
5. Read a value (wheel speed) of both normal wheel sensors and error-detecting wheel sensor.

Regarding the deference at 30 km/h (19 MPH) between the wheel speed detected by the error detecting wheel sensor and the maximum/minimum wheel speed detected by the normal wheel sensors, is the difference within 5%, respectively?

YES >> GO TO 10.
NO >> GO TO 11.

10. PERFORM SELF-DIAGNOSIS (3)

With CONSULT
1. Drive the vehicle at approx. 30 km/h (19 MPH) or more for approx. 1 minute.
2. Stop the vehicle.
3. Perform self-diagnosis for “ABS”.

Is DTC “C1115” detected?

YES >> GO TO 11.
NO >> INSPECTION END

11. CHECK TERMINAL

1. Turn the ignition switch OFF.
2. Disconnect ABS actuator and electric unit (control unit) harness connector and then check ABS actuator and electric unit (control unit) pin terminals for damage or loose connection with harness connector.
3. Disconnect wheel sensor harness connector and check each wheel sensor pin terminals for damage or loose connection with harness connector.

Is the inspection result normal?

YES >> GO TO 14.
NO >> Repair or replace error-detected parts and GO TO 12.

12. CHECK DATA MONITOR (3)

With CONSULT
1. Connect ABS actuator and electric unit (control unit) harness connector.
2. Connect wheel sensor harness connector.
3. Erase self-diagnosis result for “ABS”.
4. Turn the ignition switch OFF, and wait 10 seconds or more.
5. Start the engine.
6. Select “ABS” and “DATA MONITOR”, check “FR LH SENSOR”, “FR RH SENSOR”, “RR LH SENSOR” and “RR RH SENSOR”.
   NOTE:
   Set the “DATA MONITOR” recording speed to “10 msec”.
7. Read a value (wheel speed) of both normal wheel sensors and error-detecting wheel sensor.

Regarding the deference at 30 km/h (19 MPH) between the wheel speed detected by the error detecting wheel sensor and the maximum/minimum wheel speed detected by the normal wheel sensors, is the difference within 5%, respectively?

YES >> GO TO 13.
NO >> GO TO 14.

13. PERFORM SELF-DIAGNOSIS (4)

With CONSULT
1. Drive the vehicle at approx. 30 km/h (19 MPH) or more for approx. 1 minute.

2. Stop the vehicle.
3. Perform self-diagnosis for “ABS”.

Is DTC “C1115” detected?

YES >> GO TO 14.
NO >> INSPECTION END

14. CHECK WHEEL SENSOR HARNESS

1. Turn the ignition switch OFF.
2. Disconnect ABS actuator and electric unit (control unit) harness connector.
3. Disconnect wheel sensor harness connector.
4. Check continuity between ABS actuator and electric unit (control unit) harness connector and wheel sensor harness connector. (Check continuity when steering wheel is steered to RH and LH, or center harness in wheel housing is moved.)

Measurement terminal for power supply circuit

ABS actuator and electric unit (control unit)		Wheel sensor		Continuity
Connector	Terminal	Connector	Terminal	
E36	20	E22 (Front LH)	1	Existed
	33	E39 (Front RH)		
	22	C10 (Rear LH)		
	35	C11 (Rear RH)		

Measurement terminal for signal circuit

ABS actuator and electric unit (control unit)		Wheel sensor		Continuity
Connector	Terminal	Connector	Terminal	
E36	34	E22 (Front LH)	2	Existed
	19	E39 (Front RH)		
	36	C10 (Rear LH)		
	21	C11 (Rear RH)		

5. Check continuity between ABS actuator and electric unit (control unit) harness connector and the ground.

ABS actuator and electric unit (control unit)		—	Continuity
Connector	Terminal		
E36	20, 34	Ground	Not existed
	33, 19		
	22, 36		
	35, 21		

Is the inspection result normal?

YES >> GO TO 15.
NO >> Repair or replace error-detected parts and GO TO 15.

15. CHECK DATA MONITOR (4)

With CONSULT

1. Connect ABS actuator and electric unit (control unit) harness connector.
2. Connect wheel sensor harness connector.
3. Erase self-diagnosis result for “ABS”.
4. Turn the ignition switch OFF, and wait 10 seconds or more.
5. Start the engine.
6. Select “ABS” and “DATA MONITOR”, check “FR LH SENSOR”, “FR RH SENSOR”, “RR LH SENSOR” and “RR RH SENSOR”.
   NOTE:
   Set the “DATA MONITOR” recording speed to “10 msec”.
7. Read a value (wheel speed) of both normal wheel sensors and error-detecting wheel sensor.

Regarding the deference at 30 km/h (19 MPH) between the wheel speed detected by the error detecting wheel sensor and the maximum/minimum wheel speed detected by the normal wheel sensors, is the difference within 5%, respectively?

YES >> GO TO 16.
NO >> GO TO 17.

16. PERFORM SELF-DIAGNOSIS (5)

With CONSULT
1. Drive the vehicle at approx. 30 km/h (19 MPH) or more for approx. 1 minute.
2. Stop the vehicle.
3. Perform self-diagnosis for “ABS”.

Is DTC “C1115” detected?

YES >> GO TO 17.
NO >> INSPECTION END

17. REPLACE WHEEL SENSOR

With CONSULT
1. Replace wheel sensor.
- Front: Refer to BRC-143, "FRONT WHEEL SENSOR : Removal and Installation".
- Rear: Refer to BRC-144, "REAR WHEEL SENSOR : Removal and Installation".
2. Erase self-diagnosis result for “ABS”.
3. Turn the ignition switch OFF, and wait 10 seconds or more.
4. Start the engine.
5. Select “ABS” and “DATA MONITOR”, check “FR LH SENSOR”, “FR RH SENSOR”, “RR LH SENSOR” and “RR RH SENSOR”.
   NOTE:
   Set the “DATA MONITOR” recording speed to “10 msec”.
6. Read a value (wheel speed) of both normal wheel sensors and error-detecting wheel sensor.

Regarding the deference at 30 km/h (19 MPH) between the wheel speed detected by the error detecting wheel sensor and the maximum/minimum wheel speed detected by the normal wheel sensors, is the difference within 5%, respectively?

YES >> GO TO 18.
NO >> Replace ABS actuator and electric unit (control unit). Refer to BRC-146, "Removal and Installation".

18. PERFORM SELF-DIAGNOSIS (6)

With CONSULT
1. Drive the vehicle at approx. 30 km/h (19 MPH) or more for approx. 1 minute.
2. Stop the vehicle.
3. Perform self-diagnosis for “ABS”.

Is DTC “C1115” detected?

YES >> Replace ABS actuator and electric unit (control unit). Refer to BRC-146, "Removal and Installation".
NO >> INSPECTION END

C1116 STOP LAMP SWITCH

DTC Logic

INFOID:0000000009012474

DTC DETECTION LOGIC

DTC	Display Item	Malfunction detected condition	Possible causes
C1116	STOP LAMP SW	• When stop lamp switch signal is not input when brake pedal depress. • When stop lamp switch signal is not input when stop lamp relay operates.	• Harness or connector • Stop lamp switch • Stop lamp relay • ABS actuator and electric unit (control unit) • Battery power supply system

DTC CONFIRMATION PROCEDURE

1.PRECONDITIONING

If “DTC CONFIRMATION PROCEDURE” has been previously conducted, always turn ignition switch OFF and wait at least 10 seconds before conducting the next test.

>> GO TO 2.

2.CHECK DTC DETECTION

With CONSULT
1. Turn the ignition switch OFF to ON.
2. Perform self-diagnosis for “ABS”.

Is DTC “C1116” detected?

YES >> Proceed to diagnosis procedure. Refer to BRC-84, "Diagnosis Procedure".
NO >> INSPECTION END

Diagnosis Procedure

INFOID:0000000009012475

NOTE:
DTC “C1116” may be detected when the brake pedal and the accelerator pedal are simultaneously depressed for 1 minute or more while driving the vehicle. This is not a malfunction.

1.INTERVIEW FROM THE CUSTOMER

Check if the brake pedal and the accelerator pedal are simultaneously depressed for 1 minute or more while driving the vehicle.

Is there such a history?

YES >> GO TO 2.
NO >> GO TO 3.

2.PERFORM SELF-DIAGNOSIS

With CONSULT
1. Erase self-diagnosis result for “ABS”.
2. Turn the ignition switch OFF, and wait 10 seconds or more.
3. Start the engine.
   CAUTION:
   Never start the vehicle.
4. Depress the brake pedal several times.
5. Perform self-diagnosis for “ABS”.

Is DTC “C1116” detected?

YES >> GO TO 4.
NO >> INSPECTION END

3.CHECK STOP LAMP FOR ILLUMINATION

Depress brake pedal and check that stop lamp turns ON.

Does stop lamp turn ON?

YES >> GO TO 5.
NO >> Check stop lamp system. Refer to EXL-108, "BODY SIDE : Diagnosis Procedure".

4. CHECK DATA MONITOR (1)

With CONSULT
1. Erase self-diagnosis result for “ABS”.
2. Turn the ignition switch OFF, and wait 10 seconds or more.
3. Start the engine.
   CAUTION:
   Never start the vehicle.
4. Select “ABS”, “DATA MONITOR” and “STOP LAMP SW” according to this order. Check that data monitor displays “On” or “Off” when brake pedal is depress or release. Refer to BRC-44, "Reference Value".
5. Select “ABS”, “DATA MONITOR” and “PRESS SENSOR” according to this order. Check that data monitor displays “5 bar” or less when brake pedal is depress. Refer to BRC-44, "Reference Value".

Is the inspection result normal?

YES >> INSPECTION END
NO >> GO TO 5.

5. CHECK STOP LAMP SWITCH CLEARANCE

1. Turn the ignition switch OFF.
2. Check stop lamp clearance. Refer to BR-7, "Inspection and Adjustment".

Is the inspection result normal?

YES >> GO TO 7.
NO >> Adjust stop lamp switch clearance. Refer to BR-7, "Inspection and Adjustment". GO TO 6.

6. CHECK DATA MONITOR (2)

With CONSULT
1. Erase self-diagnosis result for “ABS”.
2. Turn the ignition switch OFF, and wait 10 seconds or more.
3. Start the engine.
   CAUTION:
   Never start the vehicle.
4. Select “ABS”, “DATA MONITOR” and “STOP LAMP SW” according to this order. Check that data monitor displays “On” or “Off” when brake pedal is depress or release. Refer to BRC-44, "Reference Value".
5. Select “ABS”, “DATA MONITOR” and “PRESS SENSOR” according to this order. Check that data monitor displays “5 bar” or less when brake pedal is depress. Refer to BRC-44, "Reference Value".

Is the inspection result normal?

YES >> INSPECTION END
NO >> GO TO 7.

7. CHECK STOP LAMP SWITCH

Check stop lamp switch. Refer to BRC-93, "Component Inspection (Stop lamp Switch)".

Is the inspection result normal?

YES >> GO TO 9.
NO >> Repair or replace stop lamp switch. Refer to BR-20, "Removal and Installation". GO TO 8.

8. CHECK DATA MONITOR (3)

With CONSULT
1. Erase self-diagnosis result for “ABS”.
2. Turn the ignition switch OFF, and wait 10 seconds or more.
3. Start the engine.
   CAUTION:
   Never start the vehicle.
4. Select “ABS”, “DATA MONITOR” and “STOP LAMP SW” according to this order. Check that data monitor displays “On” or “Off” when brake pedal is depress or release. Refer to BRC-44, "Reference Value".
5. Select “ABS”, “DATA MONITOR” and “PRESS SENSOR” according to this order. Check that data monitor displays “5 bar” or less when brake pedal is depress. Refer to BRC-44, "Reference Value".

Is the inspection result normal?

YES >> INSPECTION END
NO >> GO TO 9.

9. CHECK CONNECTOR AND TERMINAL (1)

1. Turn the ignition switch OFF.
2. Disconnect ABS actuator and electric unit (control unit) harness connector.
3. Check ABS actuator and electric unit (control unit) harness connector for disconnection or looseness.
4. Check ABS actuator and electric unit (control unit) pin terminals for damage or loose connection with harness connector.
5. Disconnect stop lamp switch harness connector.
6. Check stop lamp switch harness connector for disconnection or looseness.
7. Check stop lamp switch pin terminals for damage or loose connection with harness connector.

Is the inspection result normal?

YES >> GO TO 11.
NO >> Repair or replace error-detected parts. GO TO 10.

10. CHECK DATA MONITOR (4)

With CONSULT
1. Erase self-diagnosis result for “ABS”.
2. Turn the ignition switch OFF, and wait 10 seconds or more.
3. Start the engine.
   CAUTION:
   Never start the vehicle.
4. Select “ABS”, “DATA MONITOR” and “STOP LAMP SW” according to this order. Check that data monitor displays “On” or “Off” when brake pedal is depress or release. Refer to BRC-44, "Reference Value".
5. Select “ABS”, “DATA MONITOR” and “PRESS SENSOR” according to this order. Check that data monitor displays “5 bar” or less when brake pedal is depress. Refer to BRC-44, "Reference Value".

Is the inspection result normal?

YES >> INSPECTION END
NO >> GO TO 11.

11. CHECK STOP LAMP SWITCH POWER SUPPLY (1)

1. Disconnect ABS actuator and electric unit (control unit) harness connector.
2. Check voltage between ABS actuator and electric unit (control unit) harness connector and ground.

ABS actuator and electric unit (control unit)		—	Condition	Voltage
Connector	Terminal			
E36	17	Ground	Brake pedal depressed	Approx. 0 V
			Brake pedal not depressed	

3. Turn the ignition switch ON.
   CAUTION:
   Never start engine.
4. Check voltage between ABS actuator and electric unit (control unit) harness connector and ground.

ABS actuator and electric unit (control unit)		—	Condition	Voltage
Connector	Terminal			
E36	17	Ground	Brake pedal depressed	Battery voltage
			Brake pedal not depressed	Approx. 0 V

Is the inspection result normal?

YES >> GO TO 16.
NO >> GO TO 12.

12. CHECK STOP LAMP SWITCH CIRCUIT (1)

1. Turn the ignition switch OFF.
2. Disconnect stop lamp switch harness connector.

3. Check continuity between ABS actuator and electric unit (control unit) harness connector and stop lamp switch harness connector.

ABS actuator and electric unit (control unit)		Stop lamp switch		Continuity
Connector	Terminal	Connector	Terminal	
E36	17	E115	4	Existed

4. Check continuity between ABS actuator and electric unit (control unit) harness connector and ground.

ABS actuator and electric unit (control unit)		—	Continuity
Connector	Terminal		
E36	17	Ground	Not existed

Is the inspection result normal?

YES >> GO TO 13.
NO >> Repair or replace error-detected parts.

13. CHECK STOP LAMP SWITCH POWER SUPPLY (2)

1. Check voltage between stop lamp switch harness connector and ground.

Stop lamp switch		—	Voltage
Connector	Terminal		
E115	3	Ground	Approx. 0 V

2. Turn the ignition switch ON.
CAUTION:
Never start engine.
3. Check voltage between stop lamp switch harness connector and ground.

Stop lamp switch		—	Voltage
Connector	Terminal		
E115	3	Ground	Battery voltage

Is the inspection result normal?

YES >> Check pin terminals and connection of stop lamp switch harness connector for abnormal conditions. Repair or replace error-detected parts.
NO >> GO TO 14.

14. CHECK STOP LAMP SWITCH CIRCUIT (2)

1. Turn the ignition switch OFF.
2. Check 10A fuse (#3).
3. Disconnect fuse block (J/B) harness connector.
4. Check fuse block (J/B) pin terminals for damage or loose connection with harness connector.
5. Check continuity between stop lamp switch harness connector and fuse block (J/B).

Stop lamp switch		Fuse block (J/B)		Continuity
Connector	Terminal	Connector	Terminal	
E115	3	E103	4F	Existed

Is the inspection result normal?

YES >> Perform trouble diagnosis for ignition power supply. Refer to PG-59, "Wiring Diagram - IGNITION POWER SUPPLY -".
NO >> Repair or replace error-detected parts. GO TO 15.

15. CHECK DATA MONITOR (5)

With CONSULT
1. Connect ABS actuator and electric unit (control unit) harness connector.

2. Connect stop lamp switch harness connector.
3. Connect fuse block (J/B) harness connector.
4. Erase self-diagnosis result for “ABS”.
5. Turn the ignition switch OFF, and wait 10 seconds or more.
6. Start the engine.
   CAUTION:
   Never start the vehicle.
7. Select “ABS”, “DATA MONITOR” and “STOP LAMP SW” according to this order. Check that data monitor displays “On” or “Off” when brake pedal is depress or release. Refer to BRC-44, "Reference Value".
8. Select “ABS”, “DATA MONITOR” and “PRESS SENSOR” according to this order. Check that data monitor displays “5 bar” or less when brake pedal is depress. Refer to BRC-44, "Reference Value".

Is the inspection result normal?

YES >> INSPECTION END
NO >> GO TO 16.

16. CHECK STOP LAMP SWITCH POWER SUPPLY (3)

1. Turn the ignition switch OFF.
2. Disconnect ABS actuator and electric unit (control unit) harness connector.
3. Check voltage between ABS actuator and electric unit (control unit) harness connector and ground.

ABS actuator and electric unit (control unit)		—	Condition	Voltage
Connector	Terminal			
E36	37	Ground	Brake pedal depressed	Battery voltage
			Brake pedal not depressed	Approx. 0 V

4. Turn the ignition switch ON.
   CAUTION:
   Never start engine.
5. Check voltage between ABS actuator and electric unit (control unit) harness connector and ground.

ABS actuator and electric unit (control unit)		—	Condition	Voltage
Connector	Terminal			
E36	37	Ground	Brake pedal depressed	Battery voltage
			Brake pedal not depressed	Approx. 0 V

Is the inspection result normal?

YES >> GO TO 21.
NO >> GO TO 17.

17. CHECK STOP LAMP SWITCH CIRCUIT (3)

1. Turn the ignition switch OFF.
2. Disconnect stop lamp switch harness connector.
3. Check continuity between ABS actuator and electric unit (control unit) harness connector and stop lamp switch harness connector.

ABS actuator and electric unit (control unit)		Stop lamp switch		Continuity
Connector	Terminal	Connector	Terminal	
E36	37	E115	2	Existed

4. Check continuity between ABS actuator and electric unit (control unit) harness connector and ground.

ABS actuator and electric unit (control unit)		—	Continuity
Connector	Terminal		
E36	37	Ground	Not existed

Is the inspection result normal?

YES >> GO TO 18.

NO >> Repair or replace error-detected parts.

18. CHECK STOP LAMP SWITCH POWER SUPPLY (4)

1. Check voltage between stop lamp switch harness connector and ground.

Stop lamp switch		—	Voltage
Connector	Terminal		
E115	1	Ground	Battery voltage

2. Turn the ignition switch ON.
   CAUTION:
   Never start engine.
3. Check voltage between stop lamp switch harness connector and ground.

Stop lamp switch		—	Voltage
Connector	Terminal		
E115	1	Ground	Battery voltage

Is the inspection result normal?

YES >> Check pin terminals and connection of stop lamp switch harness connector for abnormal conditions. Repair or replace error-detected parts.
NO >> GO TO 19.

19. CHECK STOP LAMP SWITCH CIRCUIT (4)

1. Turn the ignition switch OFF.
2. Check 10A fuse (#7).
3. Disconnect fuse block (J/B) harness connector.
4. Check fuse block (J/B) pin terminals for damage or loose connection with harness connector.
5. Check continuity between stop lamp switch harness connector and fuse block (J/B).

Stop lamp switch		Fuse block (J/B)		Continuity
Connector	Terminal	Connector	Terminal	
E115	1	E103	8F	Existed

Is the inspection result normal?

YES >> Perform trouble diagnosis for battery power supply. Refer to PG-11, "Wiring Diagram - BATTERY POWER SUPPLY -".
NO >> Repair or replace error-detected parts. GO TO 20.

20. CHECK DATA MONITOR (6)

With CONSULT
1. Connect ABS actuator and electric unit (control unit) harness connector.
2. Connect stop lamp switch harness connector.
3. Connect fuse block (J/B) harness connector.
4. Erase self-diagnosis result for “ABS”.
5. Turn the ignition switch OFF, and wait 10 seconds or more.
6. Start the engine.
   CAUTION:
   Never start the vehicle.
7. Select “ABS”, “DATA MONITOR” and “STOP LAMP SW” according to this order. Check that data monitor displays “On” or “Off” when brake pedal is depress or release. Refer to BRC-44, "Reference Value".
8. Select “ABS”, “DATA MONITOR” and “PRESS SENSOR” according to this order. Check that data monitor displays “5 bar” or less when brake pedal is depress. Refer to BRC-44, "Reference Value".

Is the inspection result normal?

YES >> INSPECTION END
NO >> GO TO 21.

21. CHECK STOP LAMP RELAY

Check stop lamp relay. Refer to BRC-93, "Component Inspection (Stop Lamp Relay)".

Is the inspection result normal?

YES >> GO TO 22.
NO >> Repair or replace stop lamp relay. GO TO 22.

22. CHECK CONNECTOR AND TERMINAL (2)

1. Turn the ignition switch OFF.
2. Disconnect ABS actuator and electric unit (control unit) harness connector.
3. Check ABS actuator and electric unit (control unit) harness connector for disconnection or looseness.
4. Check ABS actuator and electric unit (control unit) pin terminals for damage or loose connection with harness connector.
5. Disconnect stop lamp relay harness connector.
6. Check stop lamp relay harness connector for disconnection or looseness.
7. Check stop lamp relay pin terminals for damage or loose connection with harness connector.

Is the inspection result normal?

YES >> GO TO 23.
NO >> Repair or replace error-detected parts. GO TO 23.

23. CHECK STOP LAMP RELAY POWER SUPPLY (1)

1. Turn the ignition switch OFF.
2. Check voltage between ABS actuator and electric unit (control unit) harness connector and ground.

ABS actuator and electric unit (control unit)		—	Voltage
Connector	Terminal		
E36	46	Ground	Approx. 0 V

3. Turn the ignition switch ON.
   CAUTION:
   Never start engine.
4. Check voltage between ABS actuator and electric unit (control unit) harness connector and ground.

ABS actuator and electric unit (control unit)		—	Voltage
Connector	Terminal		
E36	46	Ground	Battery voltage

Is the inspection result normal?

YES >> GO TO 27.
NO >> GO TO 24.

24. CHECK STOP LAMP RELAY CIRCUIT (1)

1. Turn the ignition switch OFF.
2. Disconnect stop lamp relay harness connector.
3. Check continuity between ABS actuator and electric unit (control unit) harness connector and stop lamp relay harness connector.

ABS actuator and electric unit (control unit)		Stop lamp relay		Continuity
Connector	Terminal	Connector	Terminal	
E36	46	E58	2	Existed

4. Check continuity between ABS actuator and electric unit (control unit) harness connector and ground.

ABS actuator and electric unit (control unit)		—	Continuity
Connector	Terminal		
E36	46	Ground	Not existed

Is the inspection result normal?

YES >> GO TO 25.

NO >> Repair or replace error-detected parts.

25. CHECK STOP LAMP RELAY POWER SUPPLY (2)

1. Turn the ignition switch OFF.
2. Check voltage between stop lamp relay harness connector and ground.

Stop lamp relay		—	Voltage
Connector	Terminal		
E58	1	Ground	Approx. 0 V

3. Turn the ignition switch ON.
   CAUTION:
   Never start engine.
4. Check voltage between stop lamp relay harness connector and ground.

Stop lamp relay		—	Voltage
Connector	Terminal		
E58	1	Ground	Battery voltage

Is the inspection result normal?

YES >> Check pin terminals and connection of stop lamp relay harness connector for abnormal conditions. Repair or replace error-detected parts.
NO >> GO TO 26.

26. CHECK STOP LAMP RELAY CIRCUIT (2)

1. Turn the ignition switch OFF.
2. Check 10A fuse (#57).
3. Disconnect IPDM E/R harness connector.
4. Check IPDM E/R pin terminals for damage or loose connection with harness connector.
5. Check continuity between stop lamp relay harness connector and IPDM E/R harness connector.

Stop lamp relay		IPDM E/R		Continuity
Connector	Terminal	Connector	Terminal	
E58	1	E15	59	Existed

Is the inspection result normal?

YES >> Perform trouble diagnosis for ignition power supply. Refer to PG-59, "Wiring Diagram - IGNITION POWER SUPPLY -".
NO >> Repair or replace error-detected parts. GO TO 27.

27. CHECK STOP LAMP RELAY POWER SUPPLY (3)

1. Turn the ignition switch OFF.
2. Check voltage between ABS actuator and electric unit (control unit) harness connector and ground.

ABS actuator and electric unit (control unit)		—	Condition	Voltage
Connector	Terminal			
E36	37	Ground	Brake pedal depressed	Battery voltage
			Brake pedal not depressed	Approx. 0 V

3. Turn the ignition switch ON.
   CAUTION:
   Never start engine.
4. Check voltage between stop lamp relay harness connector and ground.

ABS actuator and electric unit (control unit)		—	Condition	Voltage
Connector	Terminal			
E36	37	Ground	Brake pedal depressed	Battery voltage
			Brake pedal not depressed	Approx. 0 V

Is the inspection result normal?

YES >> Replace ABS actuator and electric unit (control unit). Refer to BRC-146, "Removal and Installation".

NO >> GO TO 28.

28. CHECK STOP LAMP RELAY CIRCUIT (3)

1. Turn the ignition switch OFF.
2. Disconnect stop lamp relay harness connector.
3. Check continuity between ABS actuator and electric unit (control unit) harness connector and stop lamp relay harness connector.

ABS actuator and electric unit (control unit)		Stop lamp relay		Continuity
Connector	Terminal	Connector	Terminal	
E36	37	E58	5	Existed

4. Check continuity between ABS actuator and electric unit (control unit) harness connector and ground.

ABS actuator and electric unit (control unit)		—	Continuity
Connector	Terminal		
E36	37	Ground	Not existed

Is the inspection result normal?

YES >> GO TO 29.

NO >> Repair or replace error-detected parts.

29. CHECK STOP LAMP RELAY POWER SUPPLY (4)

1. Check voltage between stop lamp relay harness connector and ground.

Stop lamp relay		—	Voltage
Connector	Terminal		
E58	3	Ground	Battery voltage

2. Turn the ignition switch ON.
   CAUTION:
   Never start engine.
3. Check voltage between stop lamp relay harness connector and ground.

Stop lamp relay		—	Voltage
Connector	Terminal		
E58	3	Ground	Battery voltage

Is the inspection result normal?

YES >> Check pin terminals and connection of stop lamp relay harness connector for abnormal conditions. Repair or replace error-detected parts.

NO >> GO TO 30.

30. CHECK STOP LAMP RELAY CIRCUIT (4)

1. Check 10A fuse (#7).
2. Disconnect fuse block (J/B) harness connector.
3. Check fuse block (J/B) pin terminals for damage or loose connection with harness connector.
4. Check continuity between stop lamp relay harness connector and fuse block (J/B).

Stop lamp relay		Fuse block (J/B)		Continuity
Connector	Terminal	Connector	Terminal	
E58	3	E103	8F	Existed

Is the inspection result normal?

YES >> Perform trouble diagnosis for battery power supply. Refer to PG-11, "Wiring Diagram - BATTERY POWER SUPPLY -".
NO >> Repair or replace error-detected parts.

Component Inspection (Stop lamp Switch)

INFOID:0000000009012476

1. CHECK STOP LAMP SWITCH

1. Turn the ignition switch OFF.
2. Disconnect stop lamp switch harness connector.
3. Check continuity when stop lamp switch is operated.

Stop lamp switch Terminal	Condition	Continuity
1 – 2 3 – 4	When stop lamp switch is released (When brake pedal is depressed)	Existed
	When stop lamp switch is pressed (When brake pedal is released)	Not existed

Is the inspection result normal?

YES >> INSPECTION END
NO >> Replace stop lamp switch. Refer to BR-20, "Removal and Installation".

Component Inspection (Stop Lamp Relay)

INFOID:0000000009012477

1. CHECK STOP LAMP RELAY

1. Apply 12 V to stop lamp relay connector terminal (1 and 2).
   CAUTION:
   - **Never make the terminals short.**
   - **Connect the fuse between the terminals when applying the voltage.**
2. Check continuity between stop lamp relay connector terminals.

Stop lamp relay Terminal	Condition	Continuity
3 – 5	Apply 12 V to stop lamp relay connector terminal (1 and 2)	Existed
	Do not apply 12 V to stop lamp relay connector terminal (1 and 2)	Not existed

3. Check resistance between stop lamp relay connector terminals.

Stop lamp relay Terminal	Resistance
1 – 2	Approx. 50 Ω

Is the inspection result normal?

YES >> INSPECTION END
NO >> Replace stop lamp relay.

C1118 TRANSFER CONTROL UNIT

DTC Logic

INFOID:0000000009012478

DTC DETECTION LOGIC

DTC	Display Item	Malfunction detected condition	Possible causes
C1118	4WD SYSTEM	When a malfunction is detected in transfer control unit system.	• Transfer control unit • ABS actuator and electric unit (control unit) • CAN communication line

DTC CONFIRMATION PROCEDURE

1.PRECONDITIONING

If “DTC CONFIRMATION PROCEDURE” has been previously conducted, always turn ignition switch OFF and wait at least 10 seconds before conducting the next test.

>> GO TO 2.

2.CHECK DTC DETECTION

With CONSULT
1. Turn the ignition switch OFF to ON.
2. Perform self-diagnosis for “ABS”.

Is DTC “C1118” detected?

YES >> Proceed to diagnosis procedure. Refer to BRC-94, "Diagnosis Procedure".
NO >> INSPECTION END

Diagnosis Procedure

INFOID:0000000009012479

1.CHECK TRANSFER CONTROL UNIT SYSTEM

With CONSULT
Perform self-diagnosis for “ALL MODE AWD/4WD”.

Is any DTC detected?

YES >> Check the DTC.
NO >> GO TO 2.

2.CHECK ABS ACTUATOR AND ELECTRIC UNIT (CONTROL UNIT)

With CONSULT
1. Erase Self-diagnosis result for “ABS”.
2. Turn the ignition switch OFF.
3. Start the engine and drive the vehicle for a short period of time.
4. Check that the 4WD warning lamp turns OFF.
5. After the vehicle stops, perform self-diagnosis for “ABS”.

Is DTC “C1118” detected?

YES >> Replace ABS actuator and electric unit (control unit). Refer to BRC-146, "Removal and Installation".
NO >> Check pin terminals and connection of each harness connector for abnormal conditions. Repair or replace error-detected parts.

C1120, C1122, C1124, C1126 ABS IN VALVE SYSTEM

DTC Logic

INFOID:0000000009012480

DTC DETECTION LOGIC

DTC	Display Item	Malfunction detected condition	Possible causes
C1120	FR LH IN ABS SOL	When a malfunction is detected in front LH ABS IN valve.	• Harness or connector • ABS actuator and electric unit (control unit) • Fusible link • Battery power supply system
C1122	FR RH IN ABS SOL	When a malfunction is detected in front RH ABS IN valve.	
C1124	RR LH IN ABS SOL	When a malfunction is detected in rear LH ABS IN valve.	
C1126	RR RH IN ABS SOL	When a malfunction is detected in rear RH ABS IN valve.	

DTC CONFIRMATION PROCEDURE

1. PRECONDITIONING

If “DTC CONFIRMATION PROCEDURE” has been previously conducted, always turn ignition switch OFF and wait at least 10 seconds before conducting the next test.

>> GO TO 2.

2. CHECK DTC DETECTION

With CONSULT
1. Turn the ignition switch OFF to ON.
2. Perform self-diagnosis for “ABS”.

Is DTC “C1120”, “C1122”, “C1124” or “C1126” detected?

YES >> Proceed to diagnosis procedure. Refer to BRC-95, "Diagnosis Procedure".
NO >> INSPECTION END

Diagnosis Procedure

INFOID:0000000009012481

1. CHECK ABS IN VALVE POWER SUPPLY

1. Turn the ignition switch OFF.
2. Disconnect ABS actuator and electric unit (control unit) harness connector.
3. Check voltage between ABS actuator and electric unit (control unit) harness connector and ground.

ABS actuator and electric unit (control unit)		—	Voltage
Connector	Terminal		
E36	1	Ground	Battery voltage

4. Turn the ignition switch ON.
   CAUTION:
   Never start engine.
5. Check voltage between ABS actuator and electric unit (control unit) harness connector and ground.

ABS actuator and electric unit (control unit)		—	Voltage
Connector	Terminal		
E36	1	Ground	Battery voltage

Is the inspection result normal?

YES >> GO TO 3.
NO >> GO TO 2.

2. CHECK ABS IN VALVE POWER SUPPLY CIRCUIT

1. Turn the ignition switch OFF.
2. Check 30A fusible link (L).
3. Check continuity and short circuit between ABS actuator and electric unit (control unit) harness connector terminal (1) and 30A fusible link (L).

Is the inspection result normal?

YES >> Perform trouble diagnosis for battery power supply. Refer to PG-11, "Wiring Diagram - BATTERY POWER SUPPLY -".
NO >> Repair or replace error-detected parts.

3. CHECK ABS IN VALVE GROUND CIRCUIT

1. Turn the ignition switch OFF.
2. Check continuity between ABS actuator and electric unit (control unit) harness connector and the ground.

ABS actuator and electric unit (control unit)		—	Continuity
Connector	Terminal		
E36	2	Ground	Existed
	3		
E37	48		

Is the inspection result normal?

YES >> GO TO 4.
NO >> Repair or replace error-detected parts.

4. CHECK TERMINAL

Check ABS actuator and electric unit (control unit) pin terminals for damage or loose connection with harness connector.

Is the inspection result normal?

YES >> Replace ABS actuator and electric unit (control unit). Refer to BRC-146, "Removal and Installation".
NO >> Repair or replace error-detected parts.

C1121, C1123, C1125, C1127 ABS OUT VALVE SYSTEM

DTC Logic

INFOID:0000000009012482

DTC DETECTION LOGIC

DTC	Display Item	Malfunction detected condition	Possible causes
C1121	FR LH OUT ABS SOL	When a malfunction is detected in front LH ABS OUT valve.	• Harness or connector • ABS actuator and electric unit (control unit) • Fusible link • Battery power supply system
C1123	FR RH OUT ABS SOL	When a malfunction is detected in front RH ABS OUT valve.	
C1125	RR LH OUT ABS SOL	When a malfunction is detected in rear LH ABS OUT valve.	
C1127	RR RH OUT ABS SOL	When a malfunction is detected in rear RH ABS OUT valve.	

DTC CONFIRMATION PROCEDURE

1. PRECONDITIONING

If “DTC CONFIRMATION PROCEDURE” has been previously conducted, always turn the ignition switch OFF and wait at least 10 seconds before conducting the next test.

>> GO TO 2.

2. CHECK DTC DETECTION

With CONSULT

1. Turn the ignition switch OFF to ON.
2. Perform self-diagnosis for “ABS”.

Is DTC “C1121”, “C1123”, “C1125” or “C1127” detected?

YES >> Proceed to diagnosis procedure. Refer to BRC-97, "Diagnosis Procedure".
NO >> INSPECTION END

Diagnosis Procedure

INFOID:0000000009012483

1. CHECK ABS OUT VALVE POWER SUPPLY

1. Turn the ignition switch OFF.
2. Disconnect ABS actuator and electric unit (control unit) harness connector.
3. Check voltage between ABS actuator and electric unit (control unit) harness connector and ground.

ABS actuator and electric unit (control unit)		—	Voltage
Connector	Terminal		
E36	1	Ground	Battery voltage

4. Turn the ignition switch ON.
   CAUTION:
   Never start engine.
5. Check voltage between ABS actuator and electric unit (control unit) harness connector and ground.

ABS actuator and electric unit (control unit)		—	Voltage
Connector	Terminal		
E36	1	Ground	Battery voltage

Is the inspection result normal?

YES >> GO TO 3.
NO >> GO TO 2.

2. CHECK ABS OUT VALVE POWER SUPPLY CIRCUIT

1. Turn the ignition switch OFF.
2. Check 30A fusible link (L).
3. Check continuity and short circuit between ABS actuator and electric unit (control unit) harness connector terminal (1) and 30A fusible link (L).

Is the inspection result normal?

YES >> Perform trouble diagnosis for battery power supply. Refer to PG-11, "Wiring Diagram - BATTERY POWER SUPPLY -".
NO >> Repair or replace error-detected parts.

3. CHECK ABS OUT VALVE GROUND CIRCUIT

1. Turn the ignition switch OFF.
2. Check continuity between ABS actuator and electric unit (control unit) harness connector and the ground.

ABS actuator and electric unit (control unit)		—	Continuity
Connector	Terminal		
E36	2	Ground	Existed
	3		
E37	48		

Is the inspection result normal?

YES >> GO TO 4.
NO >> Repair or replace error-detected parts.

4. CHECK TERMINAL

Check ABS actuator and electric unit (control unit) pin terminals for damage or loose connection with harness connector.

Is the inspection result normal?

YES >> Replace ABS actuator and electric unit (control unit). Refer to BRC-146, "Removal and Installation".
NO >> Repair or replace error-detected parts.

C1130 ENGINE SIGNAL

DTC Logic

INFOID:0000000009012484

DTC DETECTION LOGIC

DTC	Display Item	Malfunction detected condition	Possible causes
C1130	ENGINE SIGNAL 1	When a malfunction is detected in ECM system.	• ECM • ABS actuator and electric unit (control unit) • CAN communication line

DTC CONFIRMATION PROCEDURE

1. PRECONDITIONING

If “DTC CONFIRMATION PROCEDURE” has been previously conducted, always turn ignition switch OFF and wait at least 10 seconds before conducting the next test.

>> GO TO 2.

2. CHECK DTC DETECTION

With CONSULT
1. Turn the ignition switch OFF to ON.
2. Perform self-diagnosis for “ABS”.

Is DTC “C1130” detected?

YES >> Proceed to diagnosis procedure. Refer to BRC-99, "Diagnosis Procedure".
NO >> INSPECTION END

Diagnosis Procedure

INFOID:0000000009012485

1. CHECK ENGINE SYSTEM

With CONSULT
Perform self-diagnosis for “ENGINE”.

Is any DTC detected?

YES >> Check the DTC.
NO >> GO TO 2.

2. CHECK ABS ACTUATOR AND ELECTRIC UNIT (CONTROL UNIT)

With CONSULT
1. Erase Self-diagnosis result for “ABS”.
2. Turn the ignition switch OFF.
3. Start the engine and drive the vehicle for a short period of time.
4. Check that the malfunction indicator lamp (MIL) turns OFF.
5. After the vehicle stops, perform self-diagnosis for “ABS”.

Is DTC “C1130” detected?

YES >> Replace ABS actuator and electric unit (control unit). Refer to BRC-146, "Removal and Installation".
NO >> Check pin terminals and connection of each harness connector for abnormal conditions. Repair or replace error-detected parts.

C1140 ACTUATOR RELAY SYSTEM

DTC Logic

INFOID:0000000009012486

DTC DETECTION LOGIC

DTC	Display Item	Malfunction detected condition	Possible causes
C1140	ACTUATOR RLY	When a malfunction is detected in actuator relay.	• Harness or connector • ABS actuator and electric unit (control unit) • Fusible link • Battery power supply system

DTC CONFIRMATION PROCEDURE

1. PRECONDITIONING

If “DTC CONFIRMATION PROCEDURE” has been previously conducted, always turn ignition switch OFF and wait at least 10 seconds before conducting the next test.

>> GO TO 2.

2. CHECK DTC DETECTION

With CONSULT

1. Turn the ignition switch OFF to ON.
2. Perform self-diagnosis for “ABS”.

Is DTC “C1140” detected?

YES >> Proceed to diagnosis procedure. Refer to BRC-100, "Diagnosis Procedure".
NO >> INSPECTION END

Diagnosis Procedure

INFOID:0000000009012487

1. CHECK ACTUATOR RELAY POWER SUPPLY

1. Turn the ignition switch OFF.
2. Disconnect ABS actuator and electric unit (control unit) harness connector.
3. Check voltage between ABS actuator and electric unit (control unit) harness connector and ground.

ABS actuator and electric unit (control unit)		—	Voltage
Connector	Terminal		
E36	1	Ground	Battery voltage

4. Turn the ignition switch ON.
   CAUTION:
   Never start engine.
5. Check voltage between ABS actuator and electric unit (control unit) harness connector and ground.

ABS actuator and electric unit (control unit)		—	Voltage
Connector	Terminal		
E36	1	Ground	Battery voltage

Is the inspection result normal?

YES >> GO TO 3.
NO >> GO TO 2.

2. CHECK ACTUATOR RELAY POWER SUPPLY CIRCUIT

1. Turn the ignition switch OFF.
2. Check 30A fusible link (L).
3. Check continuity and short circuit between ABS actuator and electric unit (control unit) harness connector terminal (1) and 30A fusible link (L).

Is the inspection result normal?

YES >> Perform trouble diagnosis for battery power supply. Refer to PG-11, "Wiring Diagram - BATTERY POWER SUPPLY -".

NO >> Repair or replace error-detected parts.

3. CHECK ACTUATOR RELAY GROUND CIRCUIT

1. Turn the ignition switch OFF.
2. Check continuity between ABS actuator and electric unit (control unit) harness connector and the ground.

ABS actuator and electric unit (control unit)		—	Continuity
Connector	Terminal		
E36	2	Ground	Existed
	3		
E37	48		

Is the inspection result normal?

YES >> GO TO 4.

NO >> Repair or replace error-detected parts.

4. CHECK TERMINAL

Check ABS actuator and electric unit (control unit) pin terminals for damage or loose connection with harness connector.

Is the inspection result normal?

YES >> Replace ABS actuator and electric unit (control unit). Refer to BRC-146, "Removal and Installation".

NO >> Repair or replace error-detected parts.

C1142 PRESS SENSOR

DTC Logic

INFOID:0000000009012488

DTC DETECTION LOGIC

DTC	Display Item	Malfunction detected condition	Possible causes
C1142	PRESS SEN CIRCUIT	When a malfunction is detected in master cylinder pressure sensor or control pressure sensor*.	• Stop lamp switch system • ABS actuator and electric unit (control unit) • Brake system

*: Models with Advanced Driver Assistance System

DTC CONFIRMATION PROCEDURE

1.PRECONDITIONING

If “DTC CONFIRMATION PROCEDURE” has been previously conducted, always turn ignition switch OFF and wait at least 10 seconds before conducting the next test.

>> GO TO 2.

2.CHECK DTC DETECTION

With CONSULT
1. Turn the ignition switch OFF to ON.
2. Perform self-diagnosis for “ABS”.

Is DTC “C1142” detected?

YES >> Proceed to diagnosis procedure. Refer to BRC-102, "Diagnosis Procedure".
NO >> INSPECTION END

Diagnosis Procedure

INFOID:0000000009012489

1.CHECK STOP LAMP SWITCH SYSTEM

Check stop lamp switch system. Refer to BRC-84, "Diagnosis Procedure".

Is the inspection result normal?

YES >> GO TO 2.
NO >> Repair or replace error-detected parts.

2.CHECK BRAKE FLUID LEAKAGE

Check brake fluid leakage. Refer to BR-10, "Inspection".

Is the inspection result normal?

YES >> GO TO 3.
NO >> Repair or replace error-detected parts.

3.CHECK BRAKE PIPING

Check brake piping. Refer to BR-24, "FRONT : Inspection" (front), BR-26, "REAR : Inspection" (rear).

Is the inspection result normal?

YES >> GO TO 4.
NO >> Repair or replace error-detected parts.

4.CHECK BRAKE PEDAL

Check brake pedal. Refer to BR-21, "Inspection and Adjustment".

Is the inspection result normal?

YES >> GO TO 5.
NO >> Repair or replace error-detected parts.

5.CHECK HYDRAULIC BOOSTER ASSEMBLY

Check hydraulic booster assembly. Refer to BR-32, "Inspection and Adjustment".

Is the inspection result normal?

YES >> GO TO 6.
NO >> Repair or replace error-detected parts.

6. CHECK FRONT DISC BRAKE

Check front disc brake. Refer to BR-39, "BRAKE CALIPER ASSEMBLY : Inspection".

Is the inspection result normal?

YES >> GO TO 7.
NO >> Repair or replace error-detected parts.

7. CHECK REAR DISC BRAKE

Check rear disc brake. Refer to BR-45, "BRAKE CALIPER ASSEMBLY : Inspection".

Is the inspection result normal?

YES >> GO TO 8.
NO >> Repair or replace error-detected parts.

8. CHECK ABS ACTUATOR AND ELECTRIC UNIT (CONTROL UNIT)

With CONSULT

1. Erase Self-diagnosis result for “ABS”.
2. Start the engine and drive the vehicle for a short period of time.
3. Perform self-diagnosis for “ABS”.

Is DTC “C1142” detected?

YES >> Replace ABS actuator and electric unit (control unit). Refer to BRC-146, "Removal and Installation"
NO >> Check ABS actuator and electric unit (control unit) harness connector and terminal for damage, looseness and disconnection. Repair or replace error-detected parts.

C1143 STEERING ANGLE SENSOR

DTC Logic

INFOID:0000000009012490

DTC DETECTION LOGIC

DTC	Display Item	Malfunction detected condition	Possible causes
C1143	ST ANG SEN CIRCUIT	When a malfunction is detected in steering angle sensor.	• Harness or connector • Steering angle sensor • ABS actuator and electric unit (control unit) • Fuse • Ignition power supply system • CAN communication line

DTC CONFIRMATION PROCEDURE

1. PRECONDITIONING

If “DTC CONFIRMATION PROCEDURE” has been previously conducted, always turn ignition switch OFF and wait at least 10 seconds before conducting the next test.

>> GO TO 2.

2. CHECK DTC DETECTION

With CONSULT
1. Turn the ignition switch OFF to ON.
2. Perform self-diagnosis for “ABS”.

Is DTC “C1143” detected?

YES >> Proceed to diagnosis procedure. Refer to BRC-104, "Diagnosis Procedure".
NO >> INSPECTION END

Diagnosis Procedure

INFOID:0000000009012491

1. CHECK STEERING ANGLE SENSOR MOUNTING CONDITION

Check steering angle sensor mounting condition. Refer to SR-14, "Exploded View".

Is the inspection result normal?

YES >> GO TO 2.
NO >> Repair or replace error-detected parts.

2. CHECK STEERING ANGLE SENSOR POWER SUPPLY

1. Turn the ignition switch OFF.
2. Disconnect steering angle sensor harness connector.
3. Check voltage between steering angle sensor harness connector and ground.

Steering angle sensor		—	Voltage
Connector	Terminal		
M30	4	Ground	Approx. 0 V

4. Turn the ignition switch ON.
   CAUTION:
   Never start engine.
5. Check voltage between steering angle sensor harness connector and ground.

Steering angle sensor		—	Voltage
Connector	Terminal		
M30	4	Ground	Battery voltage

Is the inspection result normal?

YES >> GO TO 4.
NO >> GO TO 3.

3. CHECK STEERING ANGLE SENSOR POWER SUPPLY CIRCUIT

1. Turn the ignition switch OFF.
2. Check 10A fuse (#3).
3. Disconnect fuse block (J/B) harness connector.
4. Check continuity between steering angle sensor harness connector and fuse block (J/B) harness connector.

Steering angle sensor		Fuse block (J/B)		Continuity
Connector	Terminal	Connector	Terminal	
M30	4	M1	2A	Existed

5. Check continuity between steering angle sensor harness connector and ground.

Steering angle sensor		—	Continuity
Connector	Terminal		
M30	4	Ground	Not existed

Is the inspection result normal?

YES >> Perform trouble diagnosis for ignition power supply. Refer to PG-59, "Wiring Diagram - IGNITION POWER SUPPLY -".
NO >> Repair or replace error-detected parts.

4. CHECK STEERING ANGLE SENSOR GROUND CIRCUIT

1. Turn the ignition switch OFF.
2. Check continuity between steering angle sensor harness connector and ground.

Steering angle sensor		—	Continuity
Connector	Terminal		
M30	1	Ground	Existed

Is the inspection result normal?

YES >> GO TO 5.
NO >> Repair or replace error-detected parts.

5. CHECK TERMINAL

- Check steering angle sensor pin terminals for damage or loose connection with harness connector.
- Check fuse block (J/B) pin terminals for damage or loose connection with harness connector.

Is the inspection result normal?

YES >> GO TO 6.
NO >> Repair or replace error-detected parts.

6. CHECK CAN COMMUNICATION LINE

Check “STRG BRANCH LINE CIRCUIT”. Refer to LAN-93, "Diagnosis Procedure".

Is the inspection result normal?

YES >> Replace ABS actuator and electric unit (control unit). Refer to BRC-146, "Removal and Installation".
NO >> Repair or replace error-detected parts. Refer to BRC-7, "Precaution for Harness Repair".

C1144 INCOMPLETE STEERING ANGLE SENSOR ADJUSTMENT

DTC Logic

INFOID:0000000009012492

DTC DETECTION LOGIC

DTC	Display Item	Malfunction detected condition	Possible causes
C1144	ST ANG SEN SIGNAL	When neutral position adjustment of steering angle sensor is not complete.	• Harness or connector • Steering angle sensor • ABS actuator and electric unit (control unit) • Incomplete neutral position adjustment of steering angle sensor

DTC CONFIRMATION PROCEDURE

1.PRECONDITIONING

If “DTC CONFIRMATION PROCEDURE” has been previously conducted, always turn ignition switch OFF and wait at least 10 seconds before conducting the next test.

>> GO TO 2.

2.CHECK DTC DETECTION

With CONSULT
1. Turn the ignition switch OFF to ON.
2. Perform self-diagnosis for “ABS”.

Is DTC “C1144” detected?

YES >> Proceed to diagnosis procedure. Refer to BRC-106, "Diagnosis Procedure".
NO >> INSPECTION END

Diagnosis Procedure

INFOID:0000000009012493

1.ADJUST THE NEUTRAL POSITION OF STEERING ANGLE SENSOR

Perform neutral position adjustment of steering angle sensor. Refer to BRC-62, "Work Procedure".

>> GO TO 2.

2.CHECK ABS ACTUATOR AND ELECTRIC UNIT (CONTROL UNIT)

With CONSULT
Perform self-diagnosis for “ABS”.

Is DTC “C1144” detected?

YES >> GO TO 3.
NO >> INSPECTION END

3.CHECK STEERING ANGLE SENSOR SYSTEM

1. Turn the ignition switch OFF.
2. Check steering angle sensor system. Refer to BRC-104, "Diagnosis Procedure".

Is the inspection result normal?

YES >> Replace ABS actuator and electric unit (control unit). Refer to BRC-146, "Removal and Installation".
NO >> Repair or replace error-detected parts.

C1145, C1146 YAW RATE/SIDE/DECEL G SENSOR

DTC Logic

INFOID:0000000009012494

DTC DETECTION LOGIC

DTC	Display Item	Malfunction detected condition	Possible causes
C1145	YAW RATE SENSOR	• When a malfunction is detected in yaw rate signal. • When yaw rate signal is not continuously received for 2 seconds or more. • When side G signal is not continuously received for 2 seconds or more. • When decel G signal is not continuously received for 2 seconds or more.	• Harness or connector • Yaw rate/side/decel G sensor • ABS actuator and electric unit (control unit) • Ignition power supply system • Fuse
C1146	SIDE G-SEN CIRCUIT	When a malfunction is detected in side/decel G signal.	

DTC CONFIRMATION PROCEDURE

1. PRECONDITIONING

If “DTC CONFIRMATION PROCEDURE” has been previously conducted, always turn ignition switch OFF and wait at least 10 seconds before conducting the next test.

>> GO TO 2.

2. CHECK DTC DETECTION

With CONSULT
1. Turn the ignition switch OFF to ON.
2. Perform self-diagnosis for “ABS”.

Is DTC “C1145” or “C1146” detected?

YES >> Proceed to diagnosis procedure. Refer to BRC-107, "Diagnosis Procedure".
NO >> INSPECTION END

Diagnosis Procedure

INFOID:0000000009012495

CAUTION:
- **A malfunction in yaw rate/side/decel G sensor system may be detected when the vehicle sharply turns during a spin turn, acceleration turn or drift driving while VDC function is OFF (VDC OFF indicator lamp is in ON status). This is not a malfunction if the status returns to normal after engine is started again. In that case, erase self-diagnosis result memory using CONSULT.**
- **When the engine is in running status and the vehicle is on a turntable at the entrance of parking lot or on a moving unit, VDC warning lamp may turn ON and “ABS” self-diagnosis may display “YAW RATE SENSOR”. In this case, yaw rate sensor is not malfunctioning. The status returns to normal when the vehicle is left from the turntable or moving unit and the engine is started again. In that case, erase self-diagnosis result memory using CONSULT.**

1. CHECK YAW RATE/SIDE/DECEL G SENSOR MOUNTING CONDITION

Check yaw rate/side/decel G sensor mounting condition. Refer to BRC-147, "Exploded View".

Is the inspection result normal?

YES >> GO TO 2.
NO >> Repair or replace error-detected parts.

2. CHECK YAW RATE/SIDE/DECEL G SENSOR POWER SUPPLY

1. Turn the ignition switch OFF.
2. Disconnect yaw rate/side/decel G sensor harness connector.
3. Check voltage between yaw rate/side/decel G sensor harness connector and ground.

Yaw rate/side/decel G sensor		—	Voltage
Connector	Terminal		
M55	3	Ground	Approx. 0 V

4. Turn the ignition switch ON.
   CAUTION:
   Never start engine.
5. Check voltage between yaw rate/side/decel G sensor harness connector and ground.

Yaw rate/side/decel G sensor		—	Voltage
Connector	Terminal		
M55	3	Ground	Battery voltage

Is the inspection result normal?

YES >> GO TO 4.
NO >> GO TO 3.

3. CHECK YAW RATE/SIDE/DECEL G SENSOR POWER SUPPLY CIRCUIT

1. Turn the ignition switch OFF.
2. Check 10A fuse (#57).
3. Disconnect IPDM E/R harness connector.
4. Check continuity between yaw rate/side/decel G sensor harness connector and IPDM E/R harness connector.

Yaw rate/side/decel G sensor		IPDM E/R		Continuity
Connector	Terminal	Connector	Terminal	
M55	3	E15	59	Existed

5. Check continuity between yaw rate/side/decel G sensor harness connector and ground.

Yaw rate/side/decel G sensor		—	Continuity
Connector	Terminal		
M55	3	Ground	Not existed

Is the inspection result normal?

YES >> Perform trouble diagnosis for ignition power supply. Refer to PG-59, "Wiring Diagram - IGNITION POWER SUPPLY -".
NO >> Repair or replace error-detected parts.

4. CHECK YAW RATE/SIDE/DECEL G SENSOR GROUND CIRCUIT

1. Turn the ignition switch OFF.
2. Check continuity between yaw rate/side/decel G sensor harness connector and ground.

Yaw rate/side/decel G sensor		—	Continuity
Connector	Terminal		
M55	6	Ground	Existed

Is the inspection result normal?

YES >> GO TO 5.
NO >> Repair or replace error-detected parts.

5. CHECK COMMUNICATION LINE (1)

1. Disconnect ABS actuator and electric unit (control unit) harness connector.
2. Check continuity between yaw rate/side/decel G sensor harness connector and ABS actuator and electric unit (control unit) harness connector.

Yaw rate/side/decel G sensor		ABS actuator and electric unit (control unit)		Continuity
Connector	Terminal	Connector	Terminal	
M55	4	E36	9	Existed
	5		10	

Is the inspection result normal?

YES >> GO TO 6.
NO >> Repair or replace error-detected parts.

6. CHECK COMMUNICATION LINE (2)

1. Connect ABS actuator and electric unit (control unit) harness connector.
2. Check resistance between yaw rate/side/decel G sensor harness connector terminals.

Yaw rate/side/decel G sensor		Resistance
Connector	Terminal	
M55	4	100 – 140 Ω
	5	

Is the inspection result normal?

YES >> GO TO 7.
NO >> Replace ABS actuator and electric unit (control unit). Refer to BRC-146, "Removal and Installation".

7. CHECK COMMUNICATION LINE (3)

1. Disconnect ABS actuator and electric unit (control unit) harness connector.
2. Check continuity between yaw rate/side/decel G sensor harness connector and ground.

Yaw rate/side/decel G sensor		—	Continuity
Connector	Terminal		
M55	4	Ground	Not existed
	5		

Is the inspection result normal?

YES >> GO TO 8.
NO >> Repair or replace error-detected parts.

8. CHECK TERMINAL

- Check ABS actuator and electric unit (control unit) pin terminals for damage or loose connection with harness connector.
- Check yaw rate/side/decel G sensor pin terminals for damage or loose connection with harness connector.
- Check IPDM E/R pin terminals for damage or loose connection with harness connector.

Is the inspection result normal?

YES >> GO TO 9.
NO >> Repair or replace error-detected parts.

9. REPLACE YAW RATE/SIDE/DECEL G SENSOR

With CONSULT

1. Connect ABS actuator and electric unit (control unit) harness connector.
2. Connect IPDM E/R harness connector.
3. Replace yaw rate/side/decel G sensor. Refer to BRC-147, "Removal and Installation".
4. Erase Self-diagnosis result for “ABS”.
5. Turn the ignition switch OFF.
6. Turn the ignition switch ON.
   CAUTION:
   Never start engine.
7. Perform self-diagnosis for “ABS”.

Is DTC “C1145” or “C1146” detected?

YES >> Replace ABS actuator and electric unit (control unit). Refer to BRC-146, "Removal and Installation".

NO >> INSPECTION END

C1155 BRAKE FLUID LEVEL SWITCH

DTC Logic

INFOID:0000000009012496

DTC DETECTION LOGIC

DTC	Display Item	Malfunction detected condition	Possible causes
C1155	BR FLUID LEVEL LOW	• When brake fluid level low signal is detected. • When an open circuit is detected in brake fluid level switch circuit.	• Harness or connector • ABS actuator and electric unit (control unit) • Brake fluid level switch

DTC CONFIRMATION PROCEDURE

1. PRECONDITIONING

If “DTC CONFIRMATION PROCEDURE” has been previously conducted, always turn ignition switch OFF and wait at least 10 seconds before conducting the next test.

>> GO TO 2.

2. CHECK DTC DETECTION

With CONSULT
1. Turn the ignition switch OFF to ON, and then wait 1 minute or more.
2. Perform self-diagnosis for “ABS”.

Is DTC “C1155” detected?

YES >> Proceed to diagnosis procedure. Refer to BRC-111, "Diagnosis Procedure".
NO >> INSPECTION END

Diagnosis Procedure

INFOID:0000000009012497

1. CHECK BRAKE FLUID LEVEL

1. Turn the ignition switch OFF.
2. Check brake fluid level. Refer to BR-10, "Inspection".

Is the inspection result normal?

YES >> GO TO 2.
NO >> Refill brake fluid. Refer to BR-11, "Refilling".

2. PERFORM SELF-DIAGNOSIS (1)

With CONSULT
1. Erase self-diagnosis result for “ABS”.
2. Turn the ignition switch OFF, and wait 10 seconds or more.
3. Turn the ignition switch ON.
   CAUTION:
   Never start the engine.
4. Perform self-diagnosis for “ABS”.

Is DTC “C1155” detected?

YES >> INSPECTION END
NO >> GO TO 3.

3. CHECK BRAKE FLUID LEVEL SWITCH

Check brake fluids level switch. Refer to BRC-113, "Component Inspection".

Is the inspection result normal?

YES >> GO TO 5.
NO >> Replace reservoir tank. Refer to BR-30, "Disassembly and Assembly". GO TO 4.

4. PERFORM SELF-DIAGNOSIS (2)

With CONSULT

1. Erase self-diagnosis result for “ABS”.
2. Turn the ignition switch OFF, and wait 10 seconds or more.
3. Turn the ignition switch ON.
   CAUTION:
   Never start the engine.
4. Perform self-diagnosis for “ABS”.

Is DTC “C1155” detected?

YES >> INSPECTION END
NO >> GO TO 5.

5. CHECK CONNECTOR AND TERMINAL

1. Turn the ignition switch OFF.
2. Disconnect brake fluid level switch harness connector.
3. Check brake fluid level switch harness connector for disconnection or looseness.
4. Check brake fluid level switch pin terminals for damage or loose connection with harness connector.
5. Disconnect ABS actuator and electric unit (control unit) harness connector.
6. Check ABS actuator and electric unit (control unit) harness connector for disconnection or looseness.
7. Check ABS actuator and electric unit (control unit) pin terminals for damage or loose connection with harness connector.

Is the inspection result normal?

YES >> GO TO 7.
NO >> Repair or replace error-detected parts. GO TO 6.

6. PERFORM SELF-DIAGNOSIS (3)

With CONSULT
1. Connect brake fluid level switch harness connector.
2. Connect ABS actuator and electric unit (control unit) harness connector.
3. Erase self-diagnosis result for “ABS”.
4. Turn the ignition switch OFF, and wait 10 seconds or more.
5. Turn the ignition switch ON.
   CAUTION:
   Never start the engine.
6. Perform self-diagnosis for “ABS”.

Is DTC “C1155” detected?

YES >> INSPECTION END
NO >> GO TO 7.

7. CHECK BRAKE FLUID LEVEL SWITCH HARNESS

1. Turn the ignition switch OFF.
2. Disconnect brake fluid level switch harness connector.
3. Disconnect ABS actuator and electric unit (control unit) harness connector.
4. Check continuity between brake fluid level switch harness connector and ABS actuator and electric unit (control unit) harness connector.

Brake fluid level switch		ABS actuator and electric unit (control unit)		Continuity
Connector	Terminal	Connector	Terminal	
E47	1	E36	13	Existed

5. Check continuity between brake fluid level switch harness connector and ground.

Brake fluid level switch		—	Continuity
Connector	Terminal		
E47	1	Ground	Not existed

Is the inspection result normal?

YES >> GO TO 8.
NO >> Repair or replace error-detected parts. GO TO 8.

8. CHECK BRAKE FLUID LEVEL SWITCH GROUND

Check continuity between brake fluid level switch harness connector and ground.

Brake fluid level switch		—	Continuity
Connector	Terminal		
E47	2	Ground	Existed

Is the inspection result normal?

YES >> Replace ABS actuator and electric unit (control unit). Refer to BRC-146, "Removal and Installation".

NO >> Repair or replace error-detected parts.

Component Inspection

INFOID:0000000009012498

1. CHECK BRAKE FLUID LEVEL SWITCH

1. Turn the ignition switch OFF.
2. Disconnect brake fluid level switch harness connector.
3. Check resistance between terminals of brake fluid level switch.

Brake fluid level switch	Condition	Resistance
Terminal		
1 – 2	When brake fluid level in reservoir tank is within the specified level.	1.9 – 2.1 kΩ
	When brake fluid level in reservoir tank is less than the specified level.	1.0 Ω or less

Is the inspection result normal?

YES >> INSPECTION END

NO >> Replace reservoir tank. Refer to BR-30, "Disassembly and Assembly".

C1160 DECEL G SEN SET

DTC Logic

INFOID:0000000009012499

DTC DETECTION LOGIC

DTC	Display Item	Malfunction detected condition	Possible causes
C1160	DECEL G SEN SET	When calibration of yaw rate/side/decal G sensor is not complete.	• Yaw rate/side/decel G sensor • Harness or connector • ABS actuator and electric unit (control unit) • Decel G sensor calibration is not performed

DTC CONFIRMATION PROCEDURE

1.PRECONDITIONING

If “DTC CONFIRMATION PROCEDURE” has been previously conducted, always turn ignition switch OFF and wait at least 10 seconds before conducting the next test.

>> GO TO 2.

2.CHECK DTC DETECTION

With CONSULT
1. Turn the ignition switch OFF to ON.
2. Perform self-diagnosis for “ABS”.

Is DTC “C1160” detected?

YES >> Proceed to diagnosis procedure. Refer to BRC-114, "Diagnosis Procedure".
NO >> INSPECTION END

Diagnosis Procedure

INFOID:0000000009012500

1.DECEL G SENSOR CALIBRATION

Perform decel G sensor calibration. Refer to BRC-64, "Work Procedure".

>> GO TO 2.

2.CHECK ABS ACTUATOR AND ELECTRIC UNIT (CONTROL UNIT)

With CONSULT
Perform self-diagnosis for “ABS”.

Is DTC “C1160” detected?

YES >> GO TO 3.
NO >> INSPECTION END

3.CHECK YAW RATE/SIDE/DECEL G SENSOR SYSTEM

1. Turn the ignition switch OFF.
2. Check yaw rate/side/decel G sensor system. Refer to BRC-107, "Diagnosis Procedure".

Is the inspection result normal?

YES >> Replace ABS actuator and electric unit (control unit). Refer to BRC-146, "Removal and Installation".
NO >> Repair or replace error-detected parts.

C1164, C1165 CV SYSTEM

DTC Logic

INFOID:0000000009012501

DTC DETECTION LOGIC

DTC	Display Item	Malfunction detected condition	Possible causes
C1164	CV 1	When a malfunction is detected in cut valve 1.	• Harness or connector • ABS actuator and electric unit (control unit) • Fusible link • Battery power supply system
C1165	CV 2	When a malfunction is detected in cut valve 2.	

DTC CONFIRMATION PROCEDURE

1.PRECONDITIONING

If “DTC CONFIRMATION PROCEDURE” has been previously conducted, always turn ignition switch OFF and wait at least 10 seconds before conducting the next test.

>> GO TO 2.

2.CHECK DTC DETECTION

With CONSULT
1. Turn the ignition switch OFF to ON.
2. Perform self-diagnosis for “ABS”.

Is DTC “C1164” or “C1165” detected?

YES >> Proceed to diagnosis procedure. Refer to BRC-115, "Diagnosis Procedure".
NO >> INSPECTION END

Diagnosis Procedure

INFOID:0000000009012502

1.CHECK CUT VALVE POWER SUPPLY

1. Turn the ignition switch OFF.
2. Disconnect ABS actuator and electric unit (control unit) harness connector.
3. Check voltage between ABS actuator and electric unit (control unit) harness connector and ground.

ABS actuator and electric unit (control unit)		—	Voltage
Connector	Terminal		
E36	1	Ground	Battery voltage

4. Turn the ignition switch ON.
   CAUTION:
   Never start engine.
5. Check voltage between ABS actuator and electric unit (control unit) harness connector and ground.

ABS actuator and electric unit (control unit)		—	Voltage
Connector	Terminal		
E36	1	Ground	Battery voltage

Is the inspection result normal?

YES >> GO TO 3.
NO >> GO TO 2.

2.CHECK CUT VALVE POWER SUPPLY CIRCUIT

1. Turn the ignition switch OFF.
2. Check 30A fusible link (L).

3. Check continuity and short circuit between ABS actuator and electric unit (control unit) harness connector terminal (1) and 30A fusible link (L).

Is the inspection result normal?

YES >> Perform trouble diagnosis for battery power supply. Refer to PG-11, "Wiring Diagram - BATTERY POWER SUPPLY -".
NO >> Repair or replace error-detected parts.

3. CHECK CUT VALVE GROUND CIRCUIT

1. Turn the ignition switch OFF.
2. Check continuity between ABS actuator and electric unit (control unit) harness connector and the ground.

ABS actuator and electric unit (control unit)		—	Continuity
Connector	Terminal		
E36	2	Ground	Existed
	3		
E37	48		

Is the inspection result normal?

YES >> GO TO 4.
NO >> Repair or replace error-detected parts.

4. CHECK TERMINAL

Check ABS actuator and electric unit (control unit) pin terminals for damage or loose connection with harness connector.

Is the inspection result normal?

YES >> Replace ABS actuator and electric unit (control unit). Refer to BRC-146, "Removal and Installation".
NO >> Repair or replace error-detected parts.

C1166, C1167 SV SYSTEM

DTC Logic

INFOID:0000000009012503

DTC DETECTION LOGIC

DTC	Display Item	Malfunction detected condition	Possible causes
C1166	SV 1	When a malfunction is detected in suction valve 1.	• Harness or connector • ABS actuator and electric unit (control unit) • Fusible link • Battery power supply system
C1167	SV 2	When a malfunction is detected in suction valve 2.	

DTC CONFIRMATION PROCEDURE

1.PRECONDITIONING

If “DTC CONFIRMATION PROCEDURE” has been previously conducted, always turn ignition switch OFF and wait at least 10 seconds before conducting the next test.

>> GO TO 2.

2.CHECK DTC DETECTION

With CONSULT
1. Turn the ignition switch OFF to ON.
2. Perform self-diagnosis for “ABS”.

Is DTC “C1166” or “C1167” detected?

YES >> Proceed to diagnosis procedure. Refer to BRC-117, "Diagnosis Procedure".
NO >> INSPECTION END

Diagnosis Procedure

INFOID:0000000009012504

1.CHECK SUCTION VALVE POWER SUPPLY

1. Turn the ignition switch OFF.
2. Disconnect ABS actuator and electric unit (control unit) harness connector.
3. Check voltage between ABS actuator and electric unit (control unit) harness connector and ground.

ABS actuator and electric unit (control unit)		—	Voltage
Connector	Terminal		
E36	1	Ground	Battery voltage

4. Turn the ignition switch ON.
   CAUTION:
   Never start engine.
5. Check voltage between ABS actuator and electric unit (control unit) harness connector and ground.

ABS actuator and electric unit (control unit)		—	Voltage
Connector	Terminal		
E36	1	Ground	Battery voltage

Is the inspection result normal?

YES >> GO TO 3.
NO >> GO TO 2.

2.CHECK SUCTION VALVE POWER SUPPLY CIRCUIT

1. Turn the ignition switch OFF.
2. Check 30A fusible link (L).

3. Check continuity and short circuit between ABS actuator and electric unit (control unit) harness connector terminal (1) and 30A fusible link (L).

Is the inspection result normal?

YES >> Perform trouble diagnosis for battery power supply. Refer to PG-11, "Wiring Diagram - BATTERY POWER SUPPLY -".
NO >> Repair or replace error-detected parts.

3. CHECK SUCTION VALVE GROUND CIRCUIT

1. Turn the ignition switch OFF.
2. Check continuity between ABS actuator and electric unit (control unit) harness connector and the ground.

ABS actuator and electric unit (control unit)		—	Continuity
Connector	Terminal		
E36	2	Ground	Existed
	3		
E37	48		

Is the inspection result normal?

YES >> GO TO 4.
NO >> Repair or replace error-detected parts.

4. CHECK TERMINAL

Check ABS actuator and electric unit (control unit) pin terminals for damage or loose connection with harness connector.

Is the inspection result normal?

YES >> Replace ABS actuator and electric unit (control unit). Refer to BRC-146, "Removal and Installation".
NO >> Repair or replace error-detected parts.

C1170 VARIANT CODING

DTC Logic

INFOID:0000000009012505

DTC DETECTION LOGIC

DTC	Display Item	Malfunction detected condition	Possible causes
C1170	VARIANT CODING	When the information in ABS actuator and electric unit (control unit) is not the same.	ABS actuator and electric unit (control unit)

DTC CONFIRMATION PROCEDURE

1. PRECONDITIONING

If “DTC CONFIRMATION PROCEDURE” has been previously conducted, always turn the ignition switch OFF and wait at least 10 seconds before conducting the next test.

>> GO TO 2.

2. CHECK DTC DETECTION

With CONSULT
1. Turn the ignition switch OFF to ON.
2. Perform self-diagnosis for “ABS”.

Is DTC “C1170” detected?

YES >> Proceed to diagnosis procedure. Refer to BRC-119, "Diagnosis Procedure".
NO >> INSPECTION END

Diagnosis Procedure

INFOID:0000000009012506

1. CHECK SELF-DIAGNOSIS RESULTS

Replace ABS actuator and electric unit (control unit) even if other display than “VARIANT CODING” is displayed in self-diagnosis for “ABS”.

>> Replace ABS actuator and electric unit (control unit). Refer to BRC-146, "Removal and Installation".

C118E ACCUMULATOR

DTC Logic

INFOID:0000000009012507

DTC DETECTION LOGIC

CAUTION:

The VDC warning lamp, ABS warning lamp and brake warning lamp turns ON and DTC “C118E” may be detected in self-diagnosis result of “ABS” when the brake pedal is excessively operated, such as air bleeding. This is not a system malfunction because this occurs due to the temporary decrease in accumulator fluid pressure. The system returns to normal condition when the accumulator fluid pressure reaches the specified pressure with the ignition switch ON and the VDC warning lamp, ABS warning lamp, and brake warning lamp turn OFF. After these steps, ABS self-diagnosis results are erased.

DTC	Display Item	Malfunction detected condition	Possible causes
C118E	ACCUMULATOR PRESS	When performing excessive brake pedal operation with the vehicle stopped. [When accumulator fluid pressure reaches 11.43 MPa (114 bar, 116.6 kg/cm^2, 1657 psi) after reaching 17.3 MPa (173 bar, 176.5 kg/cm^2, 2509 psi.]	—

Diagnosis Procedure

INFOID:0000000009012508

1. ERASE SELF-DIAGNOSIS RESULT

CAUTION:

The VDC warning lamp, ABS warning lamp and brake warning lamp turns ON and DTC “C118E” may be detected in self-diagnosis result of “ABS” when the brake pedal is excessively operated, such as air bleeding. This is not a system malfunction because this occurs due to the temporary decrease in accumulator fluid pressure. The system returns to normal condition when the accumulator fluid pressure reaches the specified pressure with the ignition switch ON and the VDC warning lamp, ABS warning lamp, and brake warning lamp turn OFF. After these steps, ABS self-diagnosis results are erased.

With CONSULT

1. Erase Self-diagnosis result for “ABS”.
2. Turn the ignition switch OFF.
3. Depress brake pedal to full stroke 20 times or more.
4. Start the engine, and then wait 2 minutes or more.
5. Check VDC warning lamp, ABS warning lamp and brake warning lamp turns OFF.
6. Perform self-diagnosis for “ABS”.

Is any DTC detected?

YES >> Check the DTC. Refer to BRC-50, "DTC Index".
NO >> INSPECTION END

U1000 CAN COMM CIRCUIT

Description

INFOID:0000000009012509

CAN communication allows a high rate of information transmission through the two communication lines (CAN-H line and CAN-L line) connecting various control units in the system. Each control unit transmits/receives data but selectively reads required data only.

DTC Logic

INFOID:0000000009012510

DTC DETECTION LOGIC

DTC	Display Item	Malfunction detected condition	Possible causes
U1000	CAN COMM CIRCUIT	When CAN communication signal is not continuously received for 2 seconds or more	CAN communication system malfunction

DTC CONFIRMATION PROCEDURE

1. PRECONDITIONING

If “DTC CONFIRMATION PROCEDURE” has been previously conducted, always turn ignition switch OFF and wait at least 10 seconds before conducting the next test.

>> GO TO 2.

2. CHECK DTC DETECTION

With CONSULT
1. Turn the ignition switch OFF to ON.
2. Perform self-diagnosis for “ABS”.

Is DTC “U1000” detected?

YES >> Proceed to diagnosis procedure. Refer to BRC-121, "Diagnosis Procedure".
NO >> INSPECTION END

Diagnosis Procedure

INFOID:0000000009012511

Proceed to LAN-22, "Trouble Diagnosis Flow Chart".

POWER SUPPLY AND GROUND CIRCUIT

Description

INFOID:0000000009012512

ABS actuator and electric unit (control unit) power supply

Diagnosis Procedure

INFOID:0000000009012513

1. CHECK ABS ACTUATOR AND ELECTRIC UNIT (CONTROL UNIT) IGNITION POWER SUPPLY (1)

1. Turn the ignition switch OFF.
2. Disconnect ABS actuator and electric unit (control unit) harness connector.
3. Check voltage between ABS actuator and electric unit (control unit) harness connector and ground.

ABS actuator and electric unit (control unit)		—	Voltage
Connector	Terminal		
E36	18	Ground	Approx. 0 V

4. Turn the ignition switch ON
   CAUTION:
   Never start engine.
5. Check voltage between ABS actuator and electric unit (control unit) harness connector and ground.

ABS actuator and electric unit (control unit)		—	Voltage
Connector	Terminal		
E36	18	Ground	10 – 16 V

Is the inspection result normal?

YES >> GO TO 3.
NO >> GO TO 2.

2. CHECK ABS ACTUATOR AND ELECTRIC UNIT (CONTROL UNIT) IGNITION POWER SUPPLY CIRCUIT (1)

1. Turn the ignition switch OFF.
2. Check 10A fuse (#57).
3. Disconnect IPDM E/R harness connector.
4. Check continuity between ABS actuator and electric unit (control unit) harness connector and IPDM E/R harness connector.

ABS actuator and electric unit (control unit)		IPDM E/R		Continuity
Connector	Terminal	Connector	Terminal	
E36	18	E15	59	Existed

5. Check for continuity between ABS actuator and electric unit (control unit) harness connector and the ground.

ABS actuator and electric unit (control unit)		—	Continuity
Connector	Terminal		
E36	18	Ground	Not existed

Is the inspection result normal?

YES >> Perform trouble diagnosis for ignition power supply. Refer to PG-59, "Wiring Diagram - IGNITION POWER SUPPLY -".
NO >> Repair or replace error-detected parts.

3. CHECK ABS ACTUATOR AND ELECTRIC UNIT (CONTROL UNIT) IGNITION POWER SUPPLY (2)

1. Check voltage between ABS actuator and electric unit (control unit) harness connector and ground.

ABS actuator and electric unit (control unit)		—	Voltage
Connector	Terminal		
E37	49	Ground	Approx. 0 V

2. Turn the ignition switch ON
   CAUTION:
   Never start engine.
3. Check voltage between ABS actuator and electric unit (control unit) harness connector and ground.

ABS actuator and electric unit (control unit)		—	Voltage
Connector	Terminal		
E37	49	Ground	10 – 16 V

Is the inspection result normal?

YES >> GO TO 5.
NO >> GO TO 4.

4. CHECK ABS ACTUATOR AND ELECTRIC UNIT (CONTROL UNIT) IGNITION POWER SUPPLY CIRCUIT (2)

1. Turn the ignition switch OFF.
2. Check 10A fuse (#74).
3. Check continuity and short circuit between ABS actuator and electric unit (control unit) harness connector terminal (49) and 10A fuse (#74).

Is the inspection result normal?

YES >> Perform trouble diagnosis for ignition power supply. Refer to PG-59, "Wiring Diagram - IGNITION POWER SUPPLY -".
NO >> Repair or replace error-detected parts.

5. CHECK MOTOR AND MOTOR RELAY POWER SUPPLY CIRCUIT

1. Turn the ignition switch OFF.
2. Check voltage between ABS actuator and electric unit (control unit) harness connector and ground.

ABS actuator and electric unit (control unit)		—	Voltage
Connector	Terminal		
E36	4	Ground	Battery voltage
E37	47		

3. Turn the ignition switch ON.
   CAUTION:
   Never start engine.
4. Check voltage between ABS actuator and electric unit (control unit) harness connector and ground.

ABS actuator and electric unit (control unit)		—	Voltage
Connector	Terminal		
E36	4	Ground	Battery voltage
E37	47		

Is the inspection result normal?

YES >> GO TO 7.
NO >> GO TO 6.

6. CHECK MOTOR AND MOTOR RELAY POWER SUPPLY CIRCUIT

1. Turn the ignition switch OFF.
2. Check 50A fusible link (M).
3. Check continuity and short circuit between ABS actuator and electric unit (control unit) harness connector terminal (4 and 47) and 50A fusible link (M).

Is the inspection result normal?

YES >> Perform trouble diagnosis for battery power supply. Refer to PG-11, "Wiring Diagram - BATTERY POWER SUPPLY -".
NO >> Repair or replace error-detected parts.

7. CHECK ACTUATOR RELAY, ABS IN VALVE, ABS OUT VALVE, AND CUT VALVE, SUCTION VALVE POWER SUPPLY

1. Turn the ignition switch OFF.
2. Check voltage between ABS actuator and electric unit (control unit) harness connector and ground.

ABS actuator and electric unit (control unit)		—	Voltage
Connector	Terminal		
E36	1	Ground	Battery voltage

3. Turn the ignition switch ON
   CAUTION:
   Never start engine.
4. Check voltage between ABS actuator and electric unit (control unit) harness connector and ground.

ABS actuator and electric unit (control unit)		—	Voltage
Connector	Terminal		
E36	1	Ground	Battery voltage

Is the inspection result normal?

YES >> GO TO 9.
NO >> GO TO 8.

8. CHECK ACTUATOR RELAY, ABS IN VALVE, ABS OUT VALVE, AND CUT VALVE, SUCTION VALVE POWER SUPPLY CIRCUIT

1. Turn the ignition switch OFF.
2. Check 30A fusible link (L).
3. Check continuity and short circuit between ABS actuator and electric unit (control unit) harness connector terminal (1) and 30A fusible link (L).

Is the inspection result normal?

YES >> Perform trouble diagnosis for battery power supply. Refer to PG-11, "Wiring Diagram - BATTERY POWER SUPPLY -".
NO >> Repair or replace error-detected parts.

9. CHECK ABS ACTUATOR AND ELECTRIC UNIT (CONTROL UNIT) GROUND CIRCUIT

Check for continuity between ABS actuator and electric unit (control unit) harness connector and the ground.

ABS actuator and electric unit (control unit)		—	Continuity
Connector	Terminal		
E36	2	Ground	Existed
	3		
E37	48		

Is the inspection result normal?

YES >> GO TO 10.
NO >> Repair or replace error-detected parts.

10. CHECK TERMINAL

- Check ABS actuator and electric unit (control unit) pin terminals for damage or loose connection with harness connector.
- Check IPDM E/R pin terminals for damage or loose connection with harness connector.

Is the inspection result normal?

YES >> INSPECTION END

NO >> Repair or replace error-detected parts.

PARKING BRAKE SWITCH

Component Function Check

INFOID:0000000009012514

1. CHECK PARKING BRAKE SWITCH OPERATION

Check that brake warning lamp in combination meter turns ON/OFF when parking brake is operated.

Is the inspection result normal?

YES >> INSPECTION END
NO >> Proceed to diagnosis procedure. Refer to BRC-126, "Diagnosis Procedure".

Diagnosis Procedure

INFOID:0000000009012515

1. CHECK PARKING BRAKE SWITCH CIRCUIT

1. Turn the ignition switch OFF.
2. Disconnect parking brake switch harness connector.
3. Disconnect combination meter harness connector.
4. Check continuity between parking brake switch harness connector and combination meter harness connector.

Parking brake switch		Combination meter		Continuity
Connector	Terminal	Connector	Terminal	
M11	1	M34	26	Existed

5. Check continuity between parking brake switch harness connector and ground.

Parking brake switch		—	Continuity
Connector	Terminal		
M11	1	Ground	Not existed

Is the inspection result normal?

YES >> GO TO 2.
NO >> Repair or replace error-detected parts.

2. CHECK PARKING BRAKE SWITCH

Check parking brake switch. Refer to BRC-127, "Component Inspection".

Is the inspection result normal?

YES >> GO TO 3.
NO >> Replace parking brake switch. Refer to PB-5, "Removal and Installation".

3. CHECK PARKING BRAKE SWITCH SIGNAL

With CONSULT

1. Connect parking brake switch harness connector.
2. Connect combination meter harness connector.
3. Select “ABS”, “DATA MONITOR” and “PARK BRAKE SW” according to this order. Check parking brake switch signal.

Condition	DATA MONITOR
Operate parking brake	On
Release the parking brake	Off

Is the inspection result normal?

YES >> INSPECTION END
NO >> GO TO 4.

4. CHECK COMBINATION METER

Check combination meter. Refer to MWI-31, "CONSULT Function".

Is the inspection result normal?

YES >> GO TO 5.
NO >> Repair or replace combination meter. Refer to MWI-87, "Removal and Installation".

5. CHECK TERMINAL

- Check combination meter pin terminals for damage or loose connection with harness connector.
- Check parking brake switch pin terminals for damage or loose connection with harness connector.

Is the inspection result normal?

YES >> Replace ABS actuator and electric unit (control unit). Refer to BRC-146, "Removal and Installation".
NO >> Repair or replace error-detected parts.

Component Inspection

INFOID:0000000009012516

1. CHECK PARKING BRAKE SWITCH

1. Turn the ignition switch OFF.
2. Disconnect parking brake switch harness connector.
3. Check continuity between parking brake switch terminal and ground.

Parking brake switch Terminal	—	Condition	Continuity
1	Ground	When parking brake switch is pressed	Existed
		When parking brake switch is released	Not existed

Is the inspection result normal?

YES >> INSPECTION END
NO >> Replace parking brake switch. Refer to PB-5, "Removal and Installation".

VDC OFF SWITCH

Component Function Check

INFOID:0000000009012517

1.CHECK VDC OFF SWITCH OPERATION

Check that VDC OFF indicator lamp in combination meter turns ON/OFF when VDC OFF switch is operated.

Is the inspection result normal?

YES >> INSPECTION END
NO >> Proceed to diagnosis procedure. Refer to BRC-128, "Diagnosis Procedure".

Diagnosis Procedure

INFOID:0000000009012518

NOTE:
VDC OFF switch is integrated in SNOW MODE / TOW MODE / VDC OFF switch assembly (2WD models) or 4WD switch assembly (4WD models).

1.CHECK VDC OFF SWITCH CIRCUIT

1. Turn the ignition switch OFF.
2. Disconnect ABS actuator and electric unit (control unit) harness connector.
3. Disconnect SNOW MODE / TOW MODE / VDC OFF switch assembly (2WD models) or 4WD switch assembly (4WD models) harness connector.
4. Check continuity between ABS actuator and electric unit (control unit) harness connector and SNOW MODE / TOW MODE / VDC OFF switch assembly (2WD models) or 4WD switch assembly (4WD models) harness connector.

ABS actuator and electric unit (control unit)		SNOW MODE / TOW MODE / VDC OFF switch assembly (2WD models) or 4WD switch assembly (4WD models)		Continuity
Connector	Terminal	Connector	Terminal	
E36	39	M147*1 M54*2	1	Existed

*1: SNOW MODE / TOW MODE / VDC OFF switch assembly (2WD models)
*2: 4WD switch assembly (4WD models)

5. Check continuity between ABS actuator and electric unit (control unit) harness connector terminal and ground.

ABS actuator and electric unit (control unit)		—	Continuity
Connector	Terminal		
E36	39	Ground	Not existed

Is the inspection result normal?

YES >> GO TO 2.
NO >> Repair or replace error-detected parts.

2.CHECK VDC OFF SWITCH GROUND CIRCUIT

Check continuity between SNOW MODE / TOW MODE / VDC OFF switch assembly (2WD models) or 4WD switch assembly (4WD models) harness connector terminal and ground.

SNOW MODE / TOW MODE / VDC OFF switch assembly (2WD models) or 4WD switch assembly (4WD models)		—	Continuity
Connector	Terminal		
M147*1 M54*2	20	Ground	Existed

*1: SNOW MODE / TOW MODE / VDC OFF switch assembly (2WD models)
*2: 4WD switch assembly (4WD models)

Is the inspection result normal?

YES >> GO TO 3.
NO >> Repair or replace error-detected parts.

3. CHECK VDC OFF SWITCH

Check VDC OFF switch. Refer to BRC-129, "Component Inspection".

Is the inspection result normal?

YES >> GO TO 4.
NO >> Replace VDC OFF switch. Refer to BRC-149, "Removal and Installation".

4. CHECK VDC OFF SWITCH SIGNAL

With CONSULT

1. Connect ABS actuator and electric unit (control unit) harness connector.
2. Connect SNOW MODE / TOW MODE / VDC OFF switch assembly (2WD models) or 4WD switch assembly (4WD models) harness connector.
3. Select “ABS”, “DATA MONITOR” and “OFF SW” according to this order. Check VDC OFF switch signal.

Condition	DATA MONITOR
When VDC OFF switch is pressed and VDC OFF indicator lamp in combination meter is in ON status	On
When VDC OFF switch is pressed and VDC OFF indicator lamp in combination meter is in OFF status	Off

Is the inspection result normal?

YES >> INSPECTION END
NO >> GO TO 5.

5. CHECK TERMINAL

- Check ABS actuator and electric unit (control unit) pin terminals for damage or loose connection with harness connector.
- Check SNOW MODE / TOW MODE / VDC OFF switch assembly (2WD models) or 4WD switch assembly (4WD models) pin terminals for damage or loose connection with harness connector.

Is the inspection result normal?

YES >> Replace ABS actuator and electric unit (control unit). Refer to BRC-146, "Removal and Installation".
NO >> Repair or replace error-detected parts.

Component Inspection

INFOID:0000000009012519

NOTE:
VDC OFF switch is integrated in SNOW MODE / TOW MODE / VDC OFF switch assembly (2WD models) or 4WD switch assembly (4WD models).

1. CHECK VDC OFF SWITCH

1. Turn the ignition switch OFF.
2. Disconnect SNOW MODE / TOW MODE / VDC OFF switch assembly (2WD models) or 4WD switch assembly (4WD models) harness connector.
3. Check continuity between terminals of SNOW MODE / TOW MODE / VDC OFF switch assembly (2WD models) or 4WD switch assembly (4WD models) connector.

SNOW MODE / TOW MODE / VDC OFF switch assembly (2WD models) or 4WD switch assembly (4WD models)	Condition	Continuity
Terminal		
1 – 20	When VDC OFF switch is pressed	Existed
	When VDC OFF switch is not pressed	Not existed

Is the inspection result normal?

YES >> INSPECTION END

NO >> Replace VDC OFF switch. Refer to BRC-149, "Removal and Installation".

ABS WARNING LAMP

Component Function Check

INFOID:0000000009012520

1. CHECK ABS WARNING LAMP FUNCTION

Check that ABS warning lamp in combination meter turns ON for approx. 1 second after ignition switch is turned ON.

CAUTION:
Never start engine.

Is the inspection result normal?

YES >> INSPECTION END
NO >> Proceed to diagnosis procedure. Refer to BRC-131, "Diagnosis Procedure".

Diagnosis Procedure

INFOID:0000000009012521

1. CHECK ABS ACTUATOR AND ELECTRIC UNIT (CONTROL UNIT) POWER SUPPLY AND GROUND CIRCUIT

Perform the trouble diagnosis for ABS actuator and electric unit (control unit) power supply and ground circuit. Refer to BRC-122, "Diagnosis Procedure".

Is the inspection result normal?

YES >> GO TO 2.
NO >> Repair or replace error-detected parts.

2. PERFORM THE SELF-DIAGNOSIS

With CONSULT
Perform self-diagnosis for “ABS”.

Is any DTC detected?

YES >> Check the DTC. Refer to BRC-50, "DTC Index".
NO >> GO TO 3.

3. CHECK ABS WARNING LAMP SIGNAL

With CONSULT
1. Select “ABS”, “DATA MONITOR” and “ABS WARN LAMP” according to this order.
2. Turn the ignition switch OFF.
3. Check that data monitor displays “On” for approx. 1 second after ignition switch is turned ON and then changes to “Off”.
   CAUTION:
   Never start engine.

Is the inspection result normal?

YES >> GO TO 4.
NO >> Replace ABS actuator and electric unit (control unit). Refer to BRC-146, "Removal and Installation".

4. CHECK COMBINATION METER

Check combination meter. Refer to MWI-31, "CONSULT Function".

Is the inspection result normal?

YES >> Replace ABS actuator and electric unit (control unit). Refer to BRC-146, "Removal and Installation".
NO >> Repair or replace combination meter. Refer to MWI-87, "Removal and Installation".

BRAKE WARNING LAMP

Component Function Check

INFOID:0000000009012522

1. CHECK BRAKE WARNING LAMP FUNCTION (1)

Check that brake warning lamp in combination meter turns ON for approx. 1 second after ignition switch is turned ON.

CAUTION:
Never start engine.

Is the inspection result normal?

YES >> GO TO 2.
NO >> Proceed to diagnosis procedure. Refer to BRC-132, "Diagnosis Procedure".

2. CHECK BRAKE WARNING LAMP FUNCTION (2)

Check that brake warning lamp in combination meter turns ON/OFF when parking brake is operated.

NOTE:
Brake warning lamp turns ON when parking brake is operated (when parking brake switch is ON).

Is the inspection result normal?

YES >> GO TO 3.
NO >> Check parking brake switch system. Refer to BRC-126, "Diagnosis Procedure".

3. CHECK BRAKE WARNING LAMP FUNCTION (3)

Check that brake warning lamp in combination meter turns ON/OFF when brake fluid level switch is operated while brake fluid level in reservoir tank is with the specified level.

NOTE:
Brake warning lamp turns ON when brake fluid is less than the specified level (when brake fluid level switch is ON).

Is the inspection result normal?

YES >> INSPECTION END
NO >> Check brake fluid level switch system. Refer to BRC-111, "Diagnosis Procedure".

Diagnosis Procedure

INFOID:0000000009012523

1. CHECK ABS ACTUATOR AND ELECTRIC UNIT (CONTROL UNIT) POWER SUPPLY AND GROUND CIRCUIT

Perform the trouble diagnosis for ABS actuator and electric unit (control unit) power supply and ground circuit. Refer to BRC-122, "Diagnosis Procedure".

Is the inspection result normal?

YES >> GO TO 2.
NO >> Repair or replace error-detected parts.

2. PERFORM THE SELF-DIAGNOSIS

With CONSULT
Perform self-diagnosis for “ABS”.

Is any DTC detected?

YES >> Check the DTC. Refer to BRC-50, "DTC Index".
NO >> GO TO 3.

3. CHECK BRAKE WARNING LAMP SIGNAL

With CONSUL-.

1. Select “ABS”, “DATA MONITOR” and “EBD WARN LAMP” according to this order.
2. Turn the ignition switch OFF.
3. Check that data monitor displays “On” for approx. 1 second after ignition switch is turned ON and then changes to “Off”.
   CAUTION:
   Never start engine.

Is the inspection result normal?

YES >> GO TO 4.
NO >> Replace ABS actuator and electric unit (control unit). Refer to BRC-146, "Removal and Installation".

4. CHECK COMBINATION METER

Check combination meter. Refer to MWI-31, "CONSULT Function".

Is the inspection result normal?

YES >> Replace ABS actuator and electric unit (control unit). Refer to BRC-146, "Removal and Installation".
NO >> Repair or replace combination meter. Refer to MWI-87, "Removal and Installation".

VDC WARNING LAMP

Component Function Check

INFOID:0000000009012524

1.CHECK VDC WARNING LAMP FUNCTION

Check that VDC warning lamp in combination meter turns ON for approx. 1 second after ignition switch is turned ON.

CAUTION:

Never start engine.

Is the inspection result normal?

YES >> INSPECTION END
NO >> Proceed to diagnosis procedure. Refer to BRC-134, "Diagnosis Procedure".

Diagnosis Procedure

INFOID:0000000009012525

1.CHECK ABS ACTUATOR AND ELECTRIC UNIT (CONTROL UNIT) POWER SUPPLY AND GROUND CIRCUIT

Perform the trouble diagnosis for ABS actuator and electric unit (control unit) power supply and ground circuit. Refer to BRC-122, "Diagnosis Procedure".

Is the inspection result normal?

YES >> GO TO 2.
NO >> Repair or replace error-detected parts.

2.PERFORM THE SELF-DIAGNOSIS

With CONSULT

Perform self-diagnosis for “ABS”.

Is any DTC detected?

YES >> Check the DTC. Refer to BRC-50, "DTC Index".
NO >> GO TO 3.

3.CHECK VDC WARNING LAMP SIGNAL

With CONSULT

1. Select “ABS”, “DATA MONITOR” and “SLIP/VDC LAMP” according to this order.
2. Turn the ignition switch OFF.
3. Check that data monitor displays “On” for approx. 1 second after ignition switch is turned ON and then changes to “Off”.

   CAUTION:

   Never start engine.

Is the inspection result normal?

YES >> GO TO 4.
NO >> Replace ABS actuator and electric unit (control unit). Refer to BRC-146, "Removal and Installation".

4.CHECK COMBINATION METER

Check combination meter. Refer to MWI-31, "CONSULT Function".

Is the inspection result normal?

YES >> Replace ABS actuator and electric unit (control unit). Refer to BRC-146, "Removal and Installation".
NO >> Repair or replace combination meter. Refer to MWI-87, "Removal and Installation".

VDC OFF INDICATOR LAMP

Component Function Check

INFOID:0000000009012526

1. CHECK VDC OFF INDICATOR LAMP FUNCTION (1)

Check that VDC OFF indicator lamp in combination meter turns ON for approx. 1 second after ignition switch is turned ON.

CAUTION:
Never start engine.

Is the inspection result normal?

YES >> GO TO 2.
NO >> Proceed to diagnosis procedure. Refer to BRC-135, "Diagnosis Procedure"

2. CHECK VDC WARNING LAMP FUNCTION (2)

Check that VDC OFF indicator lamp in combination meter turns ON/OFF when VDC OFF switch is operated.

Is the inspection result normal?

YES >> INSPECTION END
NO >> Check VDC OFF switch system. Refer to BRC-128, "Diagnosis Procedure".

Diagnosis Procedure

INFOID:0000000009012527

1. CHECK ABS ACTUATOR AND ELECTRIC UNIT (CONTROL UNIT) POWER SUPPLY AND GROUND CIRCUIT

Perform the trouble diagnosis for ABS actuator and electric unit (control unit) power supply and ground circuit. Refer to BRC-122, "Diagnosis Procedure".

Is the inspection result normal?

YES >> GO TO 2.
NO >> Repair or replace error-detected parts.

2. CHECK VDC OFF INDICATOR LAMP SIGNAL (1)

With CONSULT

1. Select “ABS”, “DATA MONITOR” and “OFF LAMP” according to this order.
2. Turn the ignition switch OFF.
3. Check that data monitor displays “On” for approx. 1 second after ignition switch is turned ON and then changes to “Off”.
   CAUTION:
   Never start engine.

Is the inspection result normal?

YES >> GO TO 3.
NO >> Replace ABS actuator and electric unit (control unit). Refer to BRC-146, "Removal and Installation".

3. CHECK VDC OFF INDICATOR LAMP SIGNAL (2)

With CONSULT

1. Select “ABS”, “DATA MONITOR” and “OFF LAMP” according to this order.
2. Check that data monitor displays “On” or “Off” each time when VDC OFF switch is operated.

Is the inspection result normal?

YES >> GO TO 4.
NO >> Check VDC OFF switch system. Refer to BRC-128, "Diagnosis Procedure".

4. CHECK COMBINATION METER

Check combination meter. Refer to MWI-31, "CONSULT Function".

Is the inspection result normal?

YES >> Replace ABS actuator and electric unit (control unit). Refer to BRC-146, "Removal and Installation".
NO >> Repair or replace combination meter. Refer to MWI-87, "Removal and Installation".

SYMPTOM DIAGNOSIS

EXCESSIVE OPERATION FREQUENCY

Description

INFOID:0000000009012528

VDC function, TCS function, ABS function, EBD function, hill start assist function and brake limited slip differential (BLSD) function operates in excessive operation frequency.

Diagnosis Procedure

INFOID:0000000009012529

1. CHECK BRAKING FORCE

Check brake force using a brake tester.

Is the inspection result normal?

YES >> GO TO 2.
NO >> Check brake system.

2. CHECK FRONT AND REAR AXLE

Check that there is no excessive looseness in front and rear axle.
- Front axle: Refer to FAX-6, "Inspection" (2WD), FAX-15, "Inspection" (4WD).
- Rear axle: Refer to RAX-5, "Inspection"

Is the inspection result normal?

YES >> GO TO 3.
NO >> Repair or replace error-detected parts.

3. CHECK WHEEL SENSOR

Check wheel sensor.
- Check installation and damage of wheel sensor.
- Check connection of wheel sensor harness connector.
- Check terminal of wheel sensor harness connector.

Is the inspection result normal?

YES >> GO TO 4.
NO >> Repair or replace wheel sensor.
- Front wheel sensor: Refer to BRC-143, "FRONT WHEEL SENSOR : Removal and Installation".
- Rear wheel sensor: Refer to BRC-144, "REAR WHEEL SENSOR : Removal and Installation".

4. CHECK WARNING LAMP TURNS OFF

Check that ABS warning lamp, brake warning lamp and VDC warning lamp turn OFF approx. 1 second after key switch is turned ON and stay in OFF status during driving.

CAUTION:

Brake warning lamp turns ON when parking brake is operated (parking brake switch is ON) or brake fluid is less than the specified level (brake fluid level switch is ON).

Is the inspection result normal?

YES >> Normal
NO >> Perform self-diagnosis for “ABS” with CONSULT.

UNEXPECTED BRAKE PEDAL REACTION

Description

INFOID:0000000009012530

A malfunction of brake pedal feel (height or others) is detected when brake pedal is depressed.

Diagnosis Procedure

INFOID:0000000009012531

1. CHECK FRONT AND REAR AXLE

Check that there is no excessive looseness in front and rear axle.
- Front axle: Refer to FAX-6, "Inspection" (2WD), FAX-15, "Inspection" (4WD).
- Rear axle: Refer to RAX-5, "Inspection"

Is the inspection result normal?

YES >> GO TO 2.
NO >> Repair or replace error-detected parts.

2. CHECK DISC ROTOR

Check disc rotor runout.
- Front: Refer to BR-16, "DISC ROTOR : Inspection and Adjustment".
- Rear: Refer to BR-18, "DISC ROTOR : Inspection and Adjustment".

Is the inspection result normal?

YES >> GO TO 3.
NO >> Refinish or replace disc rotor.
- Front: Refer to BR-16, "DISC ROTOR : Inspection and Adjustment".
- Rear: Refer to BR-18, "DISC ROTOR : Inspection and Adjustment".

3. CHECK BRAKE FLUID LEAKAGE

Check fluid leakage.
- Front: Refer to BR-24, "FRONT : Inspection".
- Rear: Refer to BR-26, "REAR : Inspection".

Is the inspection result normal?

YES >> GO TO 4.
NO >> Repair or replace error-detected parts.

4. CHECK BRAKE PEDAL

Check each item of brake pedal. Refer to BR-7, "Inspection and Adjustment".

Is the inspection result normal?

YES >> GO TO 5.
NO >> Adjust each item of brake pedal. Refer to BR-7, "Inspection and Adjustment".

5. CHECK BRAKING FORCE

Check brake force using a brake tester.

Is the inspection result normal?

YES >> GO TO 6.
NO >> Check each components of brake system.

6. CHECK BRAKE PERFORMANCE

Disconnect ABS actuator and electric unit (control unit) connector so that ABS does not operate. Check that brake force is normal in this condition. Connect harness connectors after checking.

Is the inspection result normal?

YES >> Normal
NO >> Check each components of brake system.

THE BRAKING DISTANCE IS LONG

Description

INFOID:0000000009012532

Brake stopping distance is long when ABS function is operated.

Diagnosis Procedure

INFOID:0000000009012533

CAUTION:
Brake stopping distance on slippery road like rough road, gravel road or snowy road may become longer when ABS is operated than when ABS is not operated.

1. CHECK BRAKING FORCE

Check brake force using a brake tester.

Is the inspection result normal?

YES >> GO TO 2.
NO >> Check each components of brake system.

2. CHECK BRAKE PERFORMANCE

Disconnect ABS actuator and electric unit (control unit) connector so that ABS does not operate. Check brake stopping distance in this condition. Connect harness connectors after checking.

Is the inspection result normal?

YES >> Normal
NO >> Check each components of brake system.

DOES NOT OPERATE

Description

INFOID:0000000009012534

VDC function, TCS function, ABS function, EBD function, hill start assist function and brake limited slip differential (BLSD) function does not operate.

Diagnosis Procedure

INFOID:0000000009012535

CAUTION:
- **VDC function, ABS function and EBD function never operate when the vehicle speed is 10 km/h (6.2 MPH) or less.**
- **TCS function, hill start assist function and brake limited slip differential (BLSD) function operates when the vehicle speed is 0 km/h (0 MPH) (the vehicle is in stop status).**
- **VDC function and TCS function never operate when VDC OFF switch is operated (when VDC OFF indicator lamp turns ON).**

1. CHECK ABS WARNING LAMP

Check that ABS warning lamp, brake warning lamp and VDC warning lamp turn ON and turn OFF approx. 1 second after key switch is turned ON. Check that ABS warning lamp, brake warning lamp and VDC warning lamp and stay in OFF status during driving.

CAUTION:
Brake warning lamp turns ON when parking brake is operated (parking brake switch is ON) or brake fluid is less than the specified level (brake fluid level switch is ON).

Is the inspection result normal?

YES >> Normal
NO >> Perform self-diagnosis for “ABS” with CONSULT.

BRAKE PEDAL VIBRATION OR OPERATION SOUND OCCURS

Description

INFOID:0000000009012536

- Brake pedal vibrates and motor sound from ABS actuator and electric unit (control unit) occurs, when the engine starts.
- Brake pedal vibrates during braking.

CAUTION:

Vibration may be felt during brake pedal is lightly depressed (just placing a foot on it) in the following conditions. This is normal.

- **When shifting gears**
- **When driving on slippery road**
- **During cornering at high speed**
- **When passing over bumps or grooves [Approx. 50 mm (1.97 in) or more]**
- **When pulling away just after starting engine [at approx. 10 km/h (6.2 MPH) or higher]**

Diagnosis Procedure

INFOID:0000000009012537

1. CHECK SYMPTON 1

Depress the brake pedal 10 times or more with the engine stopped and decrease the accumulator pressure to check that there are pedal vibrations when the engine is started.

Do vibrations occur?

YES >> GO TO 2.
NO >> Check brake pedal. Refer to BR-21, "Inspection and Adjustment".

2. CHECK SYMPTON 2

Depress the brake pedal 10 times or more with the engine stopped and decrease the accumulator pressure to check that motor noise from ABS actuator and electric unit (control unit) occurs when the engine starts.

Does the operation sound occur?

YES >> GO TO 3.
NO >> Perform self-diagnosis for “ABS” with CONSULT.

3. CHECK SYMPTON 3

Check symptoms when electrical component (headlamps, etc.) switches are operated.

Does the symptom occur?

YES >> Check that radio (including wiring), antenna and antenna lead-in wires are not located near ABS actuator and electric unit (control unit). Move them if they are located near ABS actuator and electric unit (control unit).
NO >> Normal

VEHICLE JERKS DURING

Description

INFOID:0000000009012538

The vehicle jerks when VDC function, TCS function, ABS function, EBD function, hill start assist function and brake limited slip differential (BLSD) function operates.

Diagnosis Procedure

INFOID:0000000009012539

1. CHECK SYMPTOM

Check that the vehicle jerks when VDC function, TCS function, ABS function, EBD function, hill start assist function and brake limited slip differential (BLSD) function operates.

Is the inspection result normal?

YES >> Normal
NO >> GO TO 2.

2. PERFORM THE SELF-DIAGNOSIS

With CONSULT
Perform self-diagnosis for “ABS”.

Is any DTC detected?

YES >> Check the DTC. Refer to BRC-50, "DTC Index".
NO >> GO TO 3.

3. CHECK CONNECTOR

With CONSULT
1. Turn the ignition switch OFF.
2. Disconnect ABS actuator and electric unit (control unit) harness connector.
3. Check connector terminal for deformation, disconnection and looseness.
4. Connect harness connector and perform self-diagnosis for “ABS” again.

Is the inspection result normal?

YES >> GO TO 4.
NO >> Poor connection of connector terminal. Repair or replace connector terminal.

4. CHECK ECM AND TCM SELF-DIAGNOSIS RESULTS

With CONSULT
Perform self-diagnosis for “ENGINE” and “TRANSMISSION”.

Is any DTC detected?

YES >> Check the DTC.
NO >> Replace ABS actuator and electric unit (control unit). Refer to BRC-146, "Removal and Installation".

NORMAL OPERATING CONDITION

Description

INFOID:0000000009012540

Symptom	Result
Brake pedal slightly vibrates and operation sound (motor sound and sound from suspension) occurs when VDC function, TCS function, ABS function, EBD function, hill start assist function and brake limited slip differential (BLSD) function operates.	This is not a malfunction, The symptom occurs VDC function, TCS function, ABS function, EBD function, hill start assist function and brake limited slip differential (BLSD) function that are normally operated.
Brake stopping distance may become longer than models without ABS function depending on the road conditions, when ABS function is operated on slippery road like rough road, gravel road or snowy road.	
Brake pedal vibrates and operation sound occurs during sudden acceleration and cornering, when VDC function, TCS function, hill start assist function and brake limited slip differential (BLSD) function is operated.	
Brake pedal vibrates and motor sound from the engine room occurs, when the engine starts or the vehicle starts just after starting the engine	This is not a malfunction. The symptom occurs during the brake fluid accumulation in the accumulator and operational check of the ABS actuator and electric unit (control unit).
Acceleration may be felt insufficient depending on the road conditions.	This is not a malfunction. The symptom occurs TCS function that puts the highest priority to obtain the optimum traction (stability).
TCS may operate momentarily, while driving on a road where friction coefficient varies, or when downshifting or fully depressing accelerator pedal	
ABS warning lamp and VDC warning lamp may turn ON, when the vehicle is on a rotating turntable or is given a strong shaking or large vibrations on a ship while the engine is running.	In this case, restart the engine on a normal road. If the normal condition is restored, there is no malfunction. In that case, erase self-diagnosis result memory for “ABS” with CONSULT.
VDC warning lamp may turn ON and VDC function, TCS function, hill start assist function and brake limited slip differential (BLSD) function may not normally operate, when driving on a special road the is extremely slanted (bank in a circuit course).	
A malfunction in yaw rate/side/decel G sensor system may be detected when the vehicle sharply turns during a spin turn, acceleration turn or drift driving while VDC function and TCS function are OFF (VDC OFF switch is pressed and VDC OFF indicator lamp is in ON status).	
The vehicle speed does not increase, when the accelerator pedal is depressed while the vehicle is on a 2-wheel chassis dynamometer for speedometer check.	This is not malfunction. (When checking the vehicle on a chassis dynamometer, operate VDC OFF switch so that TCS function is OFF.)
The VDC warning lamp, ABS warning lamp and brake warning lamp turn ON and DTC “C118E” may be detected in self-diagnosis result of “ABS” when the brake pedal is excessively operated, such as air bleeding.	This is not a system malfunction because this occurs due to the temporary decrease in accumulator fluid pressure. The system returns to normal condition when the accumulator fluid pressure reaches the specified pressure with the ignition switch ON and the VDC warning lamp, ABS warning lamp, and brake warning lamp turn OFF. After these steps, ABS self-diagnosis results are erased.
VDC OFF indicator lamp turns ON and TCS function is not operate when 4WD mode is “4L”. (Models with 4WD system)	This is not a malfunction. When the 4WD mode becomes “4L” state, the TCS function is disabled. This function is enabled when the 4WD mode becomes “AUTO” or “4H”.

REMOVAL AND INSTALLATION

WHEEL SENSOR

FRONT WHEEL SENSOR

FRONT WHEEL SENSOR : Exploded View

INFOID:0000000009012541

CAUTION:
Replace wheel hub and bearing assembly as an assembly when replacing because wheel sensor cannot be disassembled.

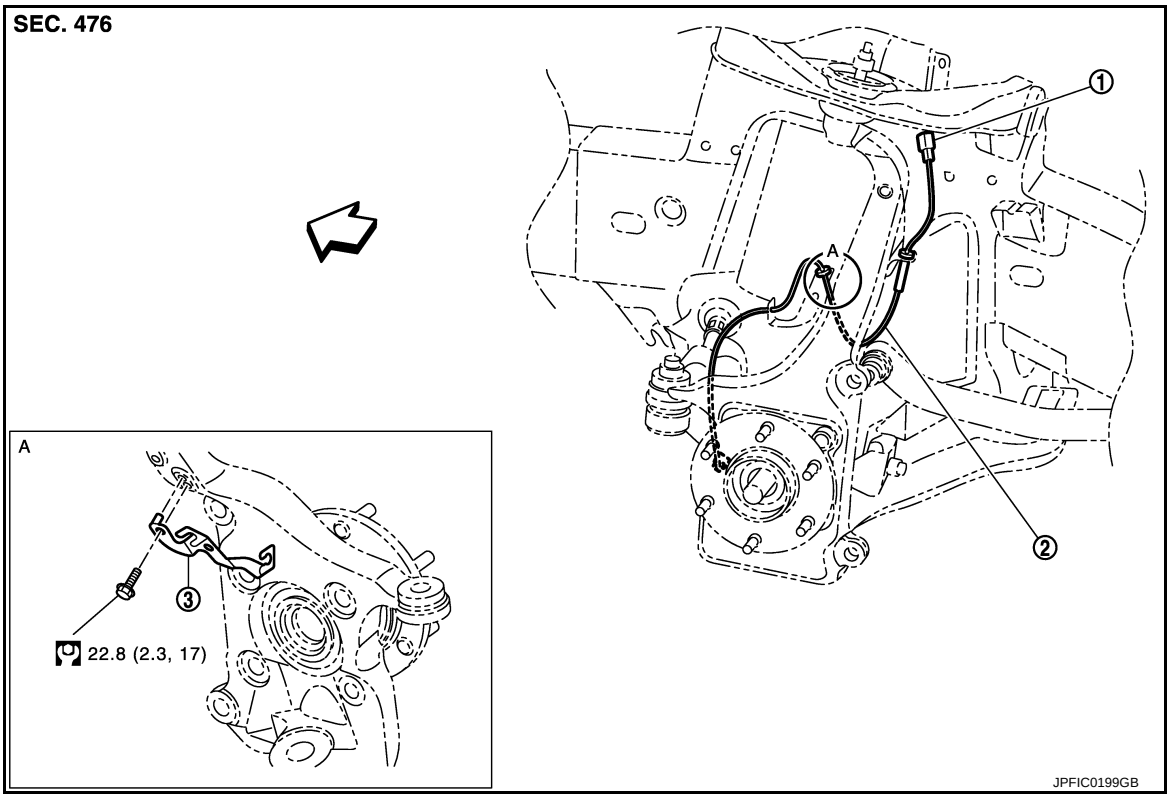

1. Front LH wheel sensor harness connector
2. Front LH wheel sensor
3. Bracket

⇦: Vehicle front
Refer to GI-4, "Components" for symbols in the figure.

NOTE:
Front RH wheel sensor is symmetrically opposite of LH.

FRONT WHEEL SENSOR : Removal and Installation

INFOID:0000000009012542

CAUTION:
Replace wheel hub and bearing assembly as an assembly when replacing because wheel sensor cannot be disassembled.

REMOVAL
Remove wheel hub and bearing assembly. Refer to FAX-7, "Removal and Installation" (2WD), FAX-17, "Removal and Installation" (4WD).

CAUTION:
Never twist or pull front wheel sensor harness.

INSTALLATION
Note the following, and install in the reverse order of the removal.

- Never twist front wheel sensor harness when installing front wheel sensor. Check that grommet is fully inserted to bracket. Check that front wheel sensor harness is not twisted after installation.
- Check that front wheel sensor identification line face toward the vehicle rear.

REAR WHEEL SENSOR

REAR WHEEL SENSOR : Exploded View

INFOID:0000000009012543

CAUTION:
Replace wheel hub and bearing assembly as an assembly when replacing because wheel sensor cannot be disassembled.

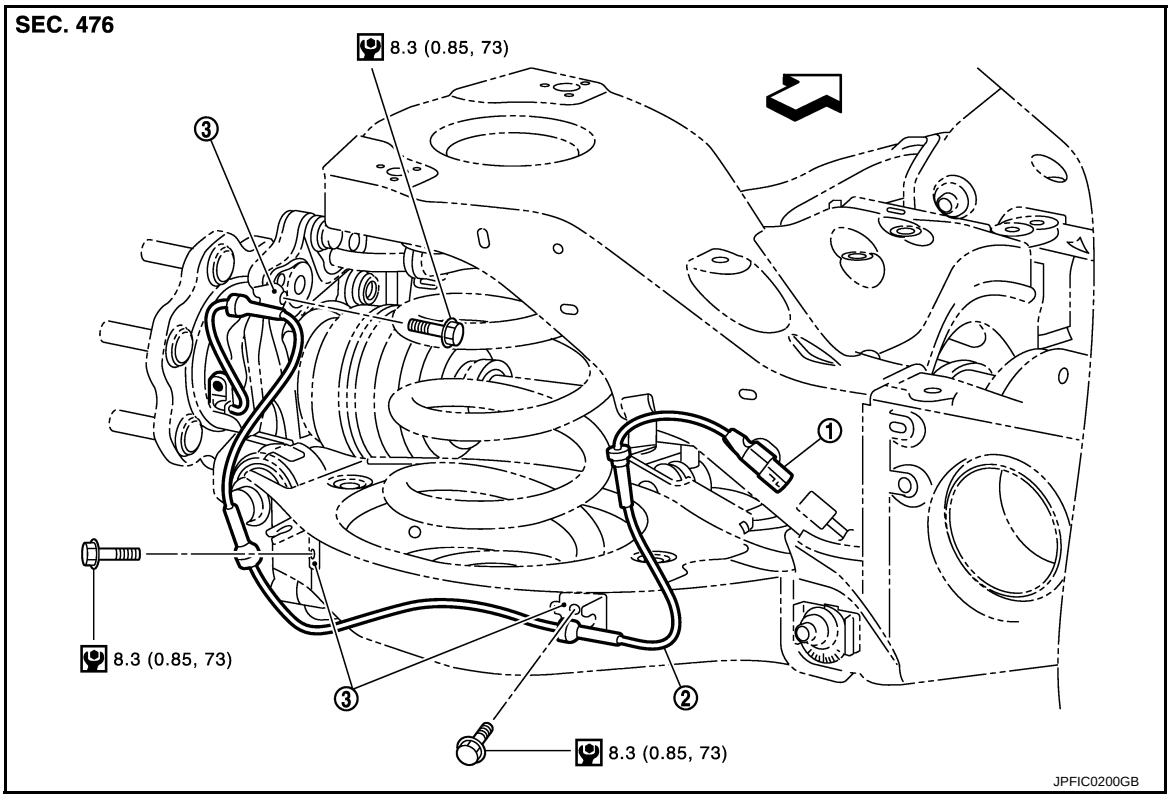

1. Rear LH wheel sensor harness connector
2. Rear LH wheel sensor
3. Bracket

⇦: Vehicle front

Refer to GI-4, "Components" for symbols in the figure.

NOTE:
Rear RH wheel sensor is symmetrically opposite of LH.

REAR WHEEL SENSOR : Removal and Installation

INFOID:0000000009012544

CAUTION:
Replace wheel hub and bearing assembly as an assembly when replacing because wheel sensor cannot be disassembled.

REMOVAL

Remove wheel hub and bearing assembly. Refer to RAX-7, "Removal and Installation".

CAUTION:
Never twist or pull rear wheel sensor harness.

INSTALLATION

Note the following, and install in the reverse order of the removal.
Never twist rear wheel sensor harness when installing rear wheel sensor. Check that grommet is fully inserted to bracket. Check that rear wheel sensor harness is not twisted after installation.

SENSOR ROTOR

FRONT SENSOR ROTOR

FRONT SENSOR ROTOR : Removal and Installation

INFOID:0000000009012545

CAUTION:
Replace wheel hub and bearing assembly as an assembly when replacing because sensor rotor cannot be disassembled.

REMOVAL

Remove wheel hub and bearing assembly. Refer to FAX-7, "Removal and Installation" (2WD), FAX-17, "Removal and Installation" (4WD).

INSTALLATION

Install wheel hub and bearing assembly. Refer to FAX-7, "Removal and Installation" (2WD), FAX-17, "Removal and Installation" (4WD).

REAR SENSOR ROTOR

REAR SENSOR ROTOR : Removal and Installation

INFOID:0000000009012546

CAUTION:
Replace wheel hub and bearing assembly as an assembly when replacing because sensor rotor cannot be disassembled.

REMOVAL

Remove wheel hub and bearing assembly. Refer to RAX-7, "Removal and Installation".

INSTALLATION

Install wheel hub and bearing assembly. Refer to RAX-7, "Removal and Installation".

ABS ACTUATOR AND ELECTRIC UNIT (CONTROL UNIT)

Removal and Installation

INFOID:0000000009012547

REMOVAL

1. Remove hydraulic booster assembly. Refer to BR-29, "Removal and Installation".
   CAUTION:
   After replacing the hydraulic booster assembly or motor/accumulator assembly, always follow the accumulator disposal procedure to discard the hydraulic booster assembly or motor/accumulator assembly. Refer to BR-33, "Disposal".
2. Remove ABS actuator and electric unit (control unit). Refer to BR-30, "Disassembly and Assembly".

INSTALLATION

Note the following, and install in the reverse order of removal.

- When installing brake tube, tighten to the specified torque using a crowfoot and torque wrench so that flare nut and brake tube are not damaged. Refer to BR-22, "FRONT : Exploded View".
- Never remove and install hydraulic booster assembly by holding harness.
- Bleed air from brake piping after installation. Refer to BR-11, "Bleeding Brake System".
- Never apply excessive impact to hydraulic booster assembly, such as by dropping it.
- Check that connector is fully locked after hydraulic booster assembly harness connector is installed.
- Perform decel G sensor calibration when hydraulic booster assembly [ABS actuator and electric unit (control unit)] is replaced. Refer to BRC-64, "Work Procedure".

YAW RATE/SIDE/DECEL G SENSOR

Exploded View

INFOID:0000000009012548

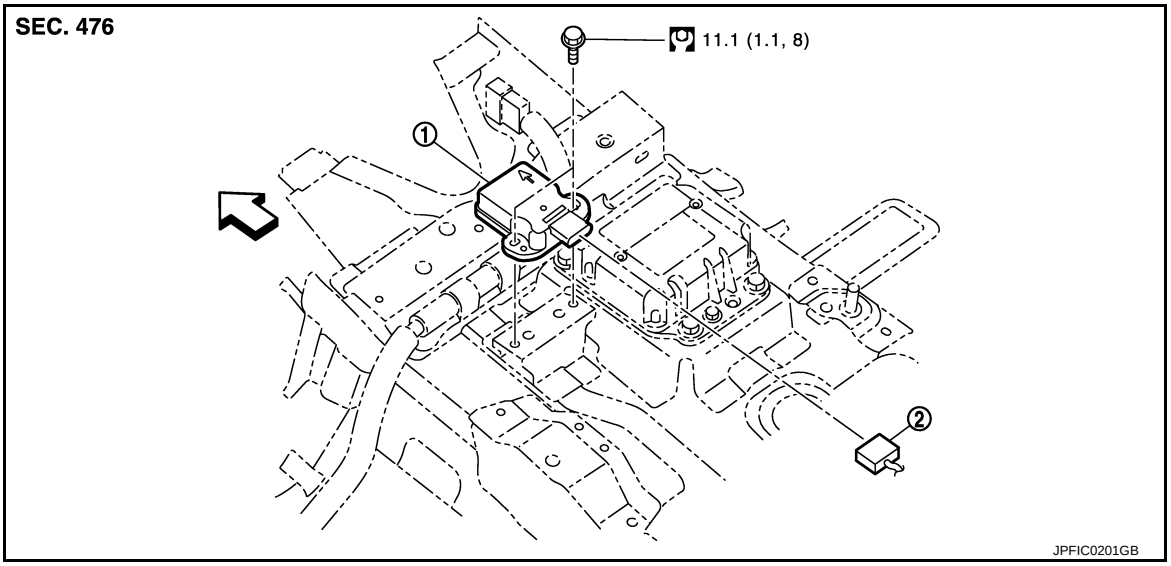

1. Yaw rate/side/decel G sensor
2. Yaw rate/side/decel G sensor harness connector

⇦: Vehicle front

Refer to GI-4, "Components" for symbols in the figure.

Removal and Installation

INFOID:0000000009012549

REMOVAL

CAUTION:

Never drop or strike yaw rate/side/decel G sensor, because it has little endurance to impact. Never use a pneumatic tool.

1. Remove console finisher assembly. Refer to IP-25, "Removal and Installation".
2. Disconnect yaw rate/side/decel G sensor harness connector.
3. Remove yaw rate/side/decel G sensor.

INSTALLATION

Note the following, and install in the reverse order of removal.

- Never drop or strike yaw rate/transverse/decel G sensor, because it has little endurance to impact. Never use a power tool.
- Perform decel G sensor calibration when yaw rate/side/decel G sensor is removing/installing or replaced. Refer to BRC-64, "Work Procedure".

STEERING ANGLE SENSOR

Removal and Installation

INFOID:0000000009012550

REMOVAL

1. Remove spiral cable assembly. Refer to SR-14, "Removal and Installation".
2. Remove steering angle sensor.

INSTALLATION

Note the following, and install in the reverse order of removal.

- Perform steering angle sensor neutral position adjustment when steering angle sensor is removing/installing or replaced. Refer to BRC-62, "Work Procedure".

VDC OFF SWITCH

Removal and Installation

INFOID:0000000009012551

NOTE:
VDC OFF switch is integrated in SNOW MODE / TOW MODE / VDC OFF switch assembly (2WD models) or 4WD switch assembly (4WD models).

REMOVAL

1. Remove console finisher assembly from center console assembly. Refer to IP-25, "Removal and Installation".
2. Disconnect SNOW MODE / TOW MODE / VDC OFF switch assembly (2WD models) or 4WD switch assembly (4WD models) harness connector.
3. Press SNOW MODE / TOW MODE / VDC OFF switch assembly (2WD models) or 4WD switch assembly (4WD models) fixing pawls, and remove SNOW MODE / TOW MODE / VDC OFF switch assembly (2WD models) or 4WD switch assembly (4WD models) from console finisher assembly.

INSTALLATION

Install in the reverse order of removal.

PRECAUTION

PRECAUTIONS

Precautions for Removing of Battery Terminal

INFOID:0000000009898588

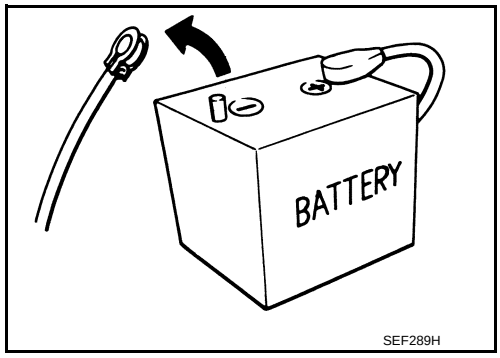

- When removing the 12V battery terminal, turn OFF the ignition switch and wait at least 30 seconds.
  NOTE:
  ECU may be active for several tens of seconds after the ignition switch is turned OFF. If the battery terminal is removed before ECU stops, then a DTC detection error or ECU data corruption may occur.
- For vehicles with the 2-batteries, be sure to connect the main battery and the sub battery before turning ON the ignition switch.
  NOTE:
  If the ignition switch is turned ON with any one of the terminals of main battery and sub battery disconnected, then DTC may be detected.
- After installing the 12V battery, always check "Self Diagnosis Result" of all ECUs and erase DTC.
  NOTE:
  The removal of 12V battery may cause a DTC detection error.

Precautions for Preview Function Service

INFOID:0000000009012552

CAUTION:
- **Never look straight into the laser beam discharger when adjusting laser beam aiming.**
- **Never use the ICC sensor removed from vehicle. Never disassemble or remodel.**
- **Erase DTC when replacing parts of ICC system. Then check the operation of ICC system after adjusting laser beam aiming if necessary.**

SYSTEM DESCRIPTION

COMPONENT PARTS

Component Parts Location

INFOID:0000000009012553

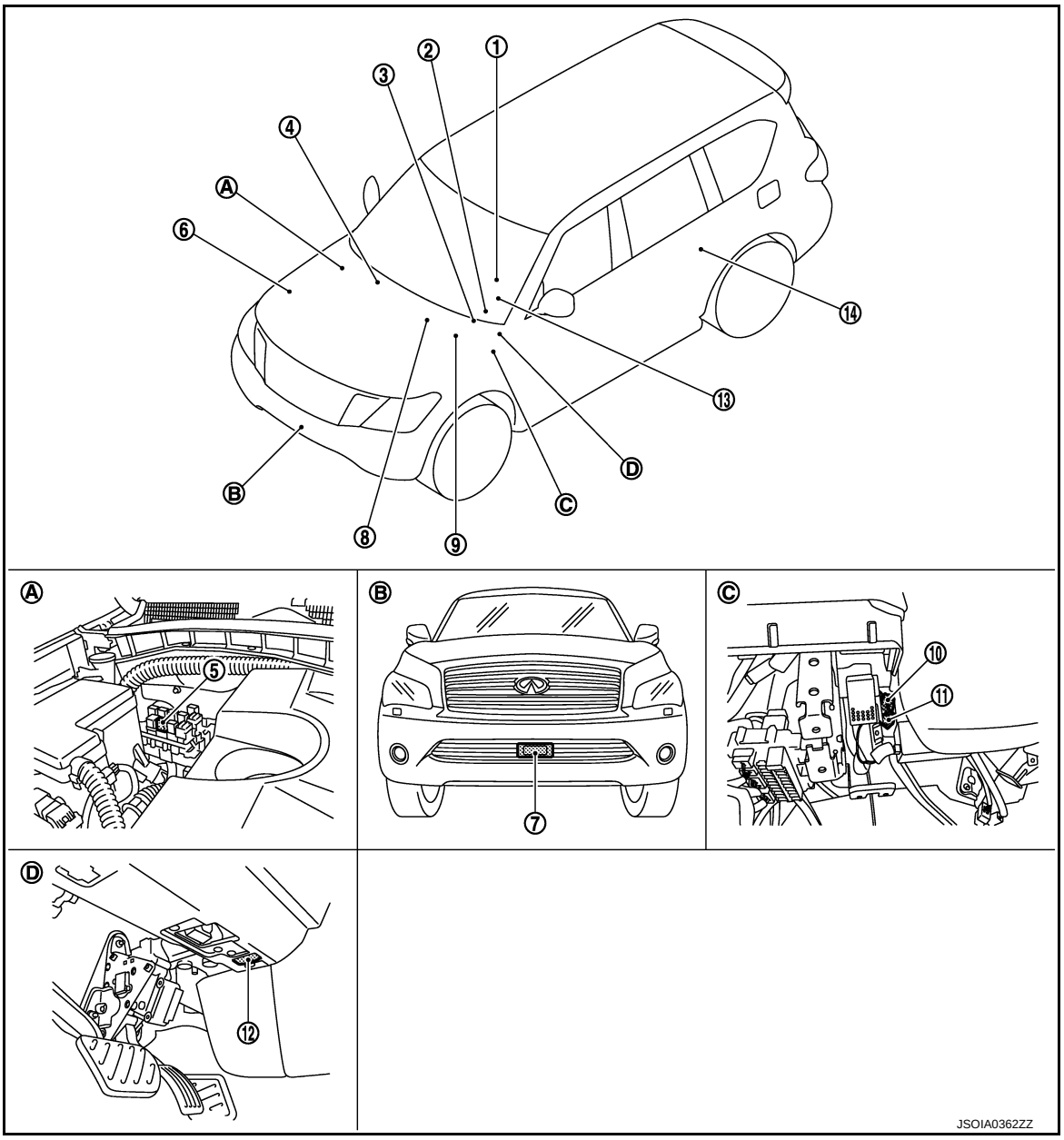

1. ICC steering switch
2. Information display, ICC system warning lamp, IBA OFF indicator lamp, buzzer (On the combination meter)
3. BCM
   Refer to BCS-4, "BODY CONTROL SYSTEM : Component Parts Location"
4. Transfer control unit
   Refer to DLN-11, "Component Parts Location"
5. ICC brake hold relay
6. ECM
   Refer to the following
   - For USA and Canada: EC-23, "Component Parts Location"
   - For Mexico: EC-593, "Component Parts Location"

7. ICC sensor
8. TCM
Refer to TM-11, "A/T CONTROL SYSTEM : Component Parts Location"
9. ABS actuator and electric unit (control unit)
Refer to BRC-9, "Component Parts Location"
10. Stop lamp switch
11. ICC brake switch
12. IBA OFF switch
13. Steering angle sensor
Refer to BRC-9, "Component Parts Location"
14. ADAS control unit
Refer to DAS-17, "Component Parts Location"

A. Back side of engine room (RH)
B. Front bumper (center)
C. Upper side of brake pedal
D. Under side of instrument lower driver panel

Component Description

INFOID:0000000009012554

×: Applicable

Component	Function				Description
	Vehicle-to-vehicle distance control mode	Conventional (fixed speed) cruise control mode	Intelligent Brake Assist (IBA)	Brake Assist (with preview function)	
ADAS control unit	×	×	×	×	• ADAS control unit calculates a target distance between vehicles and a target speed, based on signals received from each sensor and switch to transmit an engine torque command value to ECM and a brake fluid pressure control signal to ABS actuator and electric unit (control unit) via CAN communication • ADAS control unit transmits buzzer output signal to combination meter via CAN communication
ICC sensor	×	×	×	×	• ICC sensor detects light reflected from a vehicle ahead by irradiating laser forward and calculates a distance from the vehicle ahead and a relative speed, based on the detected signal • ICC sensor transmits the presence/absence of vehicle ahead and the distance from the vehicle to ADAS control unit via ITS communication
ECM	×	×	×	×	• ECM transmits the accelerator pedal position signal, ICC brake switch signal, stop lamp switch signal, ICC steering switch signal, etc. to ADAS control unit via CAN communication • ECM controls the electric throttle control actuator based on the engine torque demand received from the ADAS control unit via CAN communication
ABS actuator and electric unit (control unit)	×	×	×	×	• ABS actuator and electric unit (control unit) transmits the vehicle speed signal (wheel speed), stop lamp signal and VDC/TCS/ABS system operation condition to ADAS control unit via CAN communication • ABS actuator and electric unit (control unit) controls the brake, based on a brake fluid pressure control signal received from the ADAS control unit via CAN communication
BCM	×				BCM transmits the front wiper request signal to ADAS control unit via CAN communication

Component	Function				Description
	Vehicle-to-vehicle distance control mode	Conventional (fixed speed) cruise control mode	Intelligent Brake Assist (IBA)	Brake Assist (with preview function)	
TCM	×	×			TCM transmits the signal related to A/T control to ADAS control unit via CAN communication
Combination meter	×	×	×	×	Performs the following operations using the signals received from the ADAS control unit via the CAN communication • Displays the ICC system operation status using the meter display signal • Illuminates the ICC system warning lamp using the ICC warning lamp signal • Illuminates the IBA OFF indicator lamp using the IBA OFF indicator lamp signal • Operates the buzzer (ICC warning chime) using the buzzer output signal
ICC steering switch	×	×			• ICC steering switch allows the ON/OFF of the Intelligent Cruise Control and the settings of a vehicle speed and distance between vehicles • ICC steering switch signal is transmitted to ECM. ECM transmits the signal to the ADAS control unit via CAN communication
ICC brake switch	×	×	×	×	• ICC brake switch is turned OFF and stop lamp switch is turned ON, when depressing the brake pedal • ICC brake switch signal is input to ECM. These signals are transmitted from ECM to ADAS control unit via CAN communication • Stop lamp switch signal is input to ECM and ABS actuator and electric unit (control unit). These signals are transmitted from ECM and ABS actuator and electric unit (control unit) to ADAS control unit via CAN communication
Stop lamp switch	×	×	×	×	
ICC brake hold relay	×		×		ICC brake hold relay activates the stop lamp by ICC brake hold relay drive signal (stop lamp drive signal) outputted by the ADAS control unit
Transfer control unit	×	×	×	×	Transfer control unit transmits a mode selection state of 4WD shift switch to the ADAS control unit via CAN communication
IBA OFF switch			×Note		IBA OFF switch signal is input to the ADAS control unit
Steering angle sensor	×				Measures the rotation amount, rotation speed, and rotation direction of steering wheel, and then transmits them to ADAS control unit via CAN communication

NOTE:
Only IBA system uses

SYSTEM

BRAKE ASSIST (WITH PREVIEW FUNCTION)

BRAKE ASSIST (WITH PREVIEW FUNCTION) : System Description

INFOID:0000000009012555

FUNCTION DESCRIPTION

When the Preview Function identifies the need to apply emergency braking by sensing a vehicle ahead in the same lane and the distance and relative speed from it, it applies the brake pre-pressure before the driver depress the brake pedal and helps improve brake response by reducing pedal free play.
The Preview Function shares component parts and diagnosis with the Intelligent Cruise Control (ICC) system.

CAUTION:

This system is only an aid to assist braking operation and is not a collision warning or avoidance device. It is the driver′s responsibility to stay alert, drive safely and be in control of the vehicle at all times.

OPERATION DESCRIPTION

- The system detects the distance to the vehicle in front with the ICC sensor of ICC and judges the necessity of emergency braking.
- The system detects the accelerator pedal release operation of the driver by the accelerator pedal position sensor and estimates the driver's brake operation intention.
- If the system is judged that the emergency braking is necessary and that the driver has the intention to operate the brake, the ABS actuator and electric unit (control unit) applies pre-pressure to reduce brake pedal play.

NOTE:

This system will not operate under the following conditions:

- When the vehicle is moving at approximately 32 km/h (20 MPH) or less.
- When the 4WD shift switch is in the 4H or 4L position.

END OF OPERATION

The pre-pressure function ceases when the following conditions are met:

1. When the driver depresses the accelerator pedal or the brake pedal.
2. If the driver does not operate the accelerator pedal or brake pedal within approximately 1 second.

DTC/CIRCUIT DIAGNOSIS

BRAKE ASSIST (WITH PREVIEW FUNCTION)

Diagnosis Procedure

INFOID:0000000009012556

1. PREVIEW FUNCTION DIAGNOSIS

When the preview function is not operating properly, the buzzer sounds and the preview function warning lamp will come on.

NOTE:

The preview function warning lamp shares the ICC system warning lamp.

>> Go to ICC. Refer to CCS-75, "Work Flow".

SYMPTOM DIAGNOSIS

NORMAL OPERATING CONDITION

Description

INFOID:0000000009012557

PRECAUTIONS FOR PREVIEW FUNCTION

- This system is only an aid to assist braking operation and is not a collision warning or avoidance device. It is the driver's responsibility to stay alert, drive safely and be in control of the vehicle at all times.
- As there is a performance limit to the Preview Function, never rely solely on this system. This system does not correct careless inattentive or absent-minded driving, or overcome poor visibility in rain, fog, or other bad weather. Reduce vehicle speed by depressing the brake pedal, in order to maintain a safe distance between vehicles.
- The system may not detect a vehicle ahead, depending on road or weather conditions. While the vehicle still travels and the Brake Assist System operates under normal conditions, the Preview Function may operate improperly under the following conditions:
- When rain, snow or dirt adhere to the system sensor
- When strong light (for example, at sunrise or sunset) is directly shining on the front of the vehicle
- Winding or hilly roads may cause the sensor to temporarily not detect a vehicle in the same lane or may detect objects or vehicles in other lanes.
- Vehicle position in the lane may cause the sensor to temporarily not detect a vehicle in the same lane or may detect objects or vehicles in other lanes.
- The system will not detect:
- Pedestrians or objects in the roadway
- Oncoming vehicles in the same lane
- Motorcycles traveling offset in the travel lane as illustrated
- When the Preview Function operates may make a small noise. This is not a system malfunction.

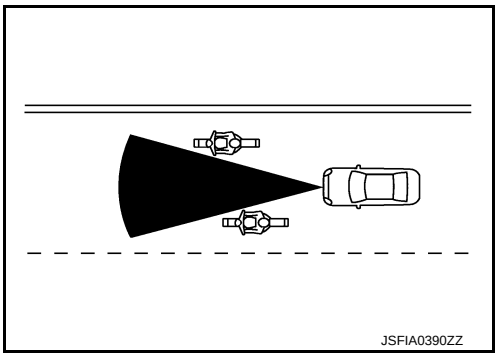

PRECAUTION

PRECAUTIONS

Precautions for Removing of Battery Terminal

INFOID:0000000009898589

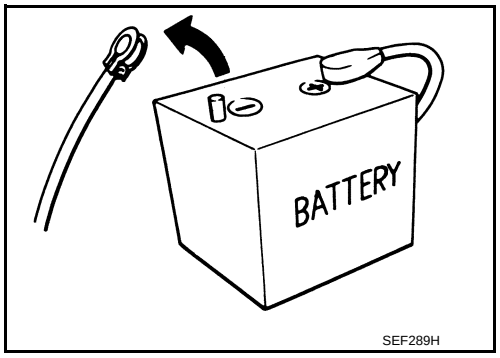

- When removing the 12V battery terminal, turn OFF the ignition switch and wait at least 30 seconds.
  NOTE:
  ECU may be active for several tens of seconds after the ignition switch is turned OFF. If the battery terminal is removed before ECU stops, then a DTC detection error or ECU data corruption may occur.
- For vehicles with the 2-batteries, be sure to connect the main battery and the sub battery before turning ON the ignition switch.
  NOTE:
  If the ignition switch is turned ON with any one of the terminals of main battery and sub battery disconnected, then DTC may be detected.
- After installing the 12V battery, always check "Self Diagnosis Result" of all ECUs and erase DTC.
  NOTE:
  The removal of 12V battery may cause a DTC detection error.

Precautions for IBA System Service

INFOID:0000000009012558

CAUTION:
- **Never look straight into the laser beam discharger when adjusting laser beam aiming.**
- **Never use the ICC sensor removed from vehicle. Never disassemble or remodel.**
- **Erase DTC when replacing parts of ICC system. Then check the operation of ICC system after adjusting laser beam aiming if necessary.**
- **Never change IBA system state ON/OFF without the consent of the customer.**

NOTE:
IBA system automatically returns to ON, when erasing self-diagnosis result of “ICC/ADAS” with CONSULT.

SYSTEM DESCRIPTION

COMPONENT PARTS

Component Parts Location

INFOID:0000000009012559

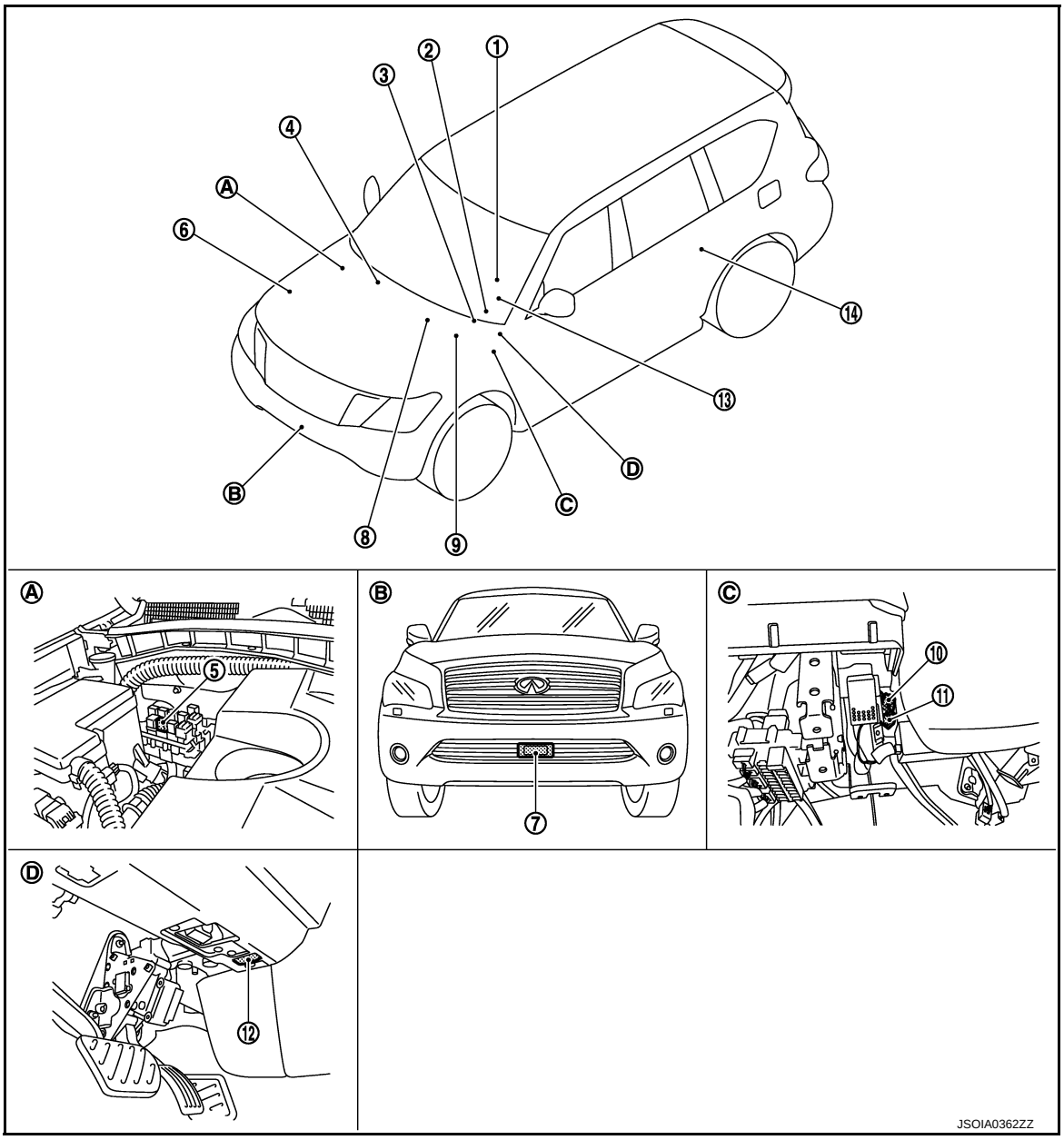

1. ICC steering switch
2. Information display, ICC system warning lamp, IBA OFF indicator lamp, buzzer (On the combination meter)
3. BCM
   Refer to BCS-4, "BODY CONTROL SYSTEM : Component Parts Location"
4. Transfer control unit
   Refer to DLN-11, "Component Parts Location"
5. ICC brake hold relay
6. ECM
   Refer to the following
   - For USA and Canada: EC-23, "Component Parts Location"
   - For Mexico: EC-593, "Component Parts Location"

7. ICC sensor
8. TCM
Refer to TM-11, "A/T CONTROL SYSTEM : Component Parts Location"
9. ABS actuator and electric unit (control unit)
Refer to BRC-9, "Component Parts Location"
10. Stop lamp switch
11. ICC brake switch
12. IBA OFF switch
13. Steering angle sensor
Refer to BRC-9, "Component Parts Location"
14. ADAS control unit
Refer to DAS-17, "Component Parts Location"

A. Back side of engine room (RH)
B. Front bumper (center)
C. Upper side of brake pedal
D. Under side of instrument lower driver panel

Component Description

INFOID:0000000009012560

×: Applicable

Component	Function				Description
	Vehicle-to-vehicle distance control mode	Conventional (fixed speed) cruise control mode	Intelligent Brake Assist (IBA)	Brake Assist (with preview function)	
ADAS control unit	×	×	×	×	• ADAS control unit calculates a target distance between vehicles and a target speed, based on signals received from each sensor and switch to transmit an engine torque command value to ECM and a brake fluid pressure control signal to ABS actuator and electric unit (control unit) via CAN communication • ADAS control unit transmits buzzer output signal to combination meter via CAN communication
ICC sensor	×	×	×	×	• ICC sensor detects light reflected from a vehicle ahead by irradiating laser forward and calculates a distance from the vehicle ahead and a relative speed, based on the detected signal • ICC sensor transmits the presence/absence of vehicle ahead and the distance from the vehicle to ADAS control unit via ITS communication
ECM	×	×	×	×	• ECM transmits the accelerator pedal position signal, ICC brake switch signal, stop lamp switch signal, ICC steering switch signal, etc. to ADAS control unit via CAN communication • ECM controls the electric throttle control actuator based on the engine torque demand received from the ADAS control unit via CAN communication
ABS actuator and electric unit (control unit)	×	×	×	×	• ABS actuator and electric unit (control unit) transmits the vehicle speed signal (wheel speed), stop lamp signal and VDC/TCS/ABS system operation condition to ADAS control unit via CAN communication • ABS actuator and electric unit (control unit) controls the brake, based on a brake fluid pressure control signal received from the ADAS control unit via CAN communication
BCM	×				BCM transmits the front wiper request signal to ADAS control unit via CAN communication

Component	Function				Description
	Vehicle-to-vehicle distance control mode	Conventional (fixed speed) cruise control mode	Intelligent Brake Assist (IBA)	Brake Assist (with preview function)	
TCM	×	×			TCM transmits the signal related to A/T control to ADAS control unit via CAN communication
Combination meter	×	×	×	×	Performs the following operations using the signals received from the ADAS control unit via the CAN communication • Displays the ICC system operation status using the meter display signal • Illuminates the ICC system warning lamp using the ICC warning lamp signal • Illuminates the IBA OFF indicator lamp using the IBA OFF indicator lamp signal • Operates the buzzer (ICC warning chime) using the buzzer output signal
ICC steering switch	×	×			• ICC steering switch allows the ON/OFF of the Intelligent Cruise Control and the settings of a vehicle speed and distance between vehicles • ICC steering switch signal is transmitted to ECM. ECM transmits the signal to the ADAS control unit via CAN communication
ICC brake switch	×	×	×	×	• ICC brake switch is turned OFF and stop lamp switch is turned ON, when depressing the brake pedal • ICC brake switch signal is input to ECM. These signals are transmitted from ECM to ADAS control unit via CAN communication • Stop lamp switch signal is input to ECM and ABS actuator and electric unit (control unit). These signals are transmitted from ECM and ABS actuator and electric unit (control unit) to ADAS control unit via CAN communication
Stop lamp switch	×	×	×	×	
ICC brake hold relay	×		×		ICC brake hold relay activates the stop lamp by ICC brake hold relay drive signal (stop lamp drive signal) outputted by the ADAS control unit
Transfer control unit	×	×	×	×	Transfer control unit transmits a mode selection state of 4WD shift switch to the ADAS control unit via CAN communication
IBA OFF switch			×Note		IBA OFF switch signal is input to the ADAS control unit
Steering angle sensor	×				Measures the rotation amount, rotation speed, and rotation direction of steering wheel, and then transmits them to ADAS control unit via CAN communication

NOTE:
Only IBA system uses

SYSTEM

INTELLIGENT BRAKE ASSIST

INTELLIGENT BRAKE ASSIST : System Description

INFOID:0000000009012561

FUNCTION DESCRIPTION

Intelligent Brake Assist (IBA) system warns the driver by a vehicle ahead detection indicator and chime when there is a risk of a collision with the vehicle ahead in the traveling lane and the driver must take avoidance action immediately. The system helps reduce the rear-end collision speed by applying the brakes when it judges a collision can not be avoided.

CAUTION:

The IBA system is a not collision avoidance system. It is the driver′s responsibility to stay alert, drive safely and be in control of the vehicle at all times. As there is a performance limit, it may not provide a warning or brake in certain conditions.

NOTE:

- The IBA system shares component parts and diagnosis with the Intelligent Cruise Control (ICC) system. New parts added to the IBA system is the IBA OFF indicator lamp in the combination meter and the IBA OFF switch on the instrument driver lower panel.
- The ICC sensor integrated unit shares the parts with the ICC, but the IBA system will operate even when the ICC system is turned to OFF.

OPERATION DESCRIPTION

The IBA system uses an ICC sensor located below the front bumper to measure the distance to a vehicle ahead. When the system judges that the distance gets shorter, the vehicle ahead detection indicator on the combination meter blinks and the warning chime sounds.

To turn the system OFF/ON, push and hold the IBA OFF switch after starting the engine for more than 1 second.

NOTE:

- The system ON/OFF condition will be memorized even if the ignition switch turns OFF.
- The IBA system operates under the following conditions.
- The IBA system will function when the vehicle is driven at speeds of approximately 15 km/h (10 MPH) and above, and when the vehicle′s speed is approximately 15 km/h (10 MPH) faster than that of the vehicle ahead.

Switch and Indicators

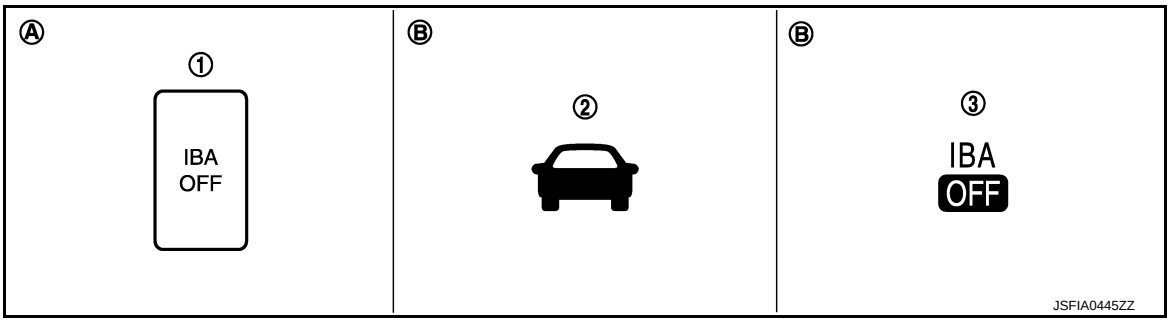

1.	IBA OFF switch	2.	Vehicle ahead detection indicator	3.	IBA OFF indicator lamp
A.	Under side of Instrument lower panel (LH)	B.	On the combination meter		

Temporary unavailable indication

Condition	Description	Indication on the combination meter
When the 4WD shift switch is in the 4H or 4L position	The system is temporary unavailable. (Without the warning chime)	 JSFIA0444ZZ

Fail-safe Indication

Condition	Description	Indication on the combination meter
• When the sensor window is dirty • When the system malfunction	The system will be cancelled automatically with a beep sound.	 JSFIA0392ZZ
When driving into a strong light (i.e. sunlight)	The system is temporary unavailable. (Without the warning chime)	

NOTE:
When the IBA turns OFF, the IBA OFF indicator lamp will illuminate.

DTC/CIRCUIT DIAGNOSIS

INTELLIGENT BRAKE ASSIST

Diagnosis Procedure

INFOID:0000000009012562

1. INTELLIGENT BRAKE ASSIST DIAGNOSIS

- The system will be cancelled automatically with a beep sound and IBA OFF indicator lamp on the combination meter will illuminate, when the system will not operate properly.
- When the IBA OFF indicator lamp continues to illuminate even if the IBA system is turned on after the engine restarts, perform the trouble-diagnosis.

NOTE:
IBA system automatically returns to ON, when erasing self-diagnosis result of “ICC/ADAS” with CONSULT.

>> Go to ICC. Refer to CCS-75, "Work Flow".

SYMPTOM DIAGNOSIS

SWITCH DOES NOT TURN ON / SWITCH DOES NOT TURN OFF

Symptom Table

INFOID:0000000009012563

CAUTION:
Perform the self-diagnosis with CONSULT before the symptom diagnosis. Perform the trouble diagnosis if any DTC is detected.

Symptom		Inspection item/Reference page
IBA system does not turn ON/OFF	IBA OFF indicator lamp is not turned ON⇔OFF when operating IBA OFF switch	BRC-164, "Diagnosis Procedure"

Description

INFOID:0000000009012564

IBA system does not turn ON/OFF.
- IBA OFF indicator lamp does not illuminate even if the IBA OFF switch is depressed when IBA OFF indicator lamp is not illuminated.
- IBA OFF indicator lamp does not turn off even if the IBA OFF switch is depressed when IBA OFF indicator lamp is illuminated.

NOTE:
- To turn the system OFF⇔ON, push and hold the IBA OFF switch after starting the engine for more than 1 second.
- The system ON/OFF condition will be memorized even if the ignition switch turns OFF.

Diagnosis Procedure

INFOID:0000000009012565

1. PERFORM THE SELF-DIAGNOSIS

1. Perform “All DTC Reading” with CONSULT.
2. Check if the DTC is detected in self-diagnosis results for “ICC/ADAS” with CONSULT. Refer to DAS-45, "DTC Index".

Is any DTC detected?

YES >> GO TO 6.
NO >> GO TO 2.

2. IBA OFF SWITCH INSPECTION

1. Start the engine.
2. Check that “IBA SW” operates normally in “DATA MONITOR” for “ICC/ADAS” with CONSULT.

Is the inspection result normal?

YES >> GO TO 3.
NO >> GO TO 5.

3. CHECK IBA OFF INDICATOR CIRCUIT

1. Start the engine.
2. Select the active test item “METER LAMP” for “ICC/ADAS” with CONSULT.
3. Check if the IBA OFF indicator lamp illuminates when the test item is operated.

Is the inspection result normal?

YES >> Refer to CCS-75, "Work Flow".
NO >> GO TO 4.

4. CHECK DATA MONITOR OF COMBINATION METER

Check that “BA W/L” operates normally in “DATA MONITOR” for “METER/M&A” with CONSULT, when the IBA OFF switch is pushed and hold for more than 1 second.

Is the inspection result normal?

YES >> Replace the combination meter. Refer to MWI-87, "Removal and Installation".
NO >> Replace the ADAS control unit. Refer to DAS-72, "Removal and Installation".

5. CHECK IBA OFF SWITCH

Check IBA OFF switch. Refer to CCS-133, "Component Inspection (IBA OFF Switch)".

Is the inspection result normal?

YES >> GO TO 7.
NO >> GO TO 6.

6. REPAIR OR REPLACE MALFUNCTIONING PARTS

Repair or replace malfunctioning parts.

>> GO TO 7.

7. CHECK IBA SYSTEM

Check that IBA OFF indicator lamp turned ON⇔OFF, when operating IBA OFF switch.

>> INSPECTION END

NORMAL OPERATING CONDITION

Description

INFOID:0000000009012566

PRECAUTIONS FOR INTELLIGENT BRAKE ASSIST

- The IBA system is a not collision avoidance system. It is the driver's responsibility to stay alert, drive safely and be in control of the vehicle at all times.
- As there is a performance limit, it may not provide a warning or brake in certain conditions.
- The system will not detect the following objects:
  - Pedestrians, animals, or obstacles in the roadway
  - Oncoming vehicles in the same lane
- The system will not detect under the following conditions:
  - When the sensor gets dirty and it is impossible to detect the distance from the vehicle ahead.
  - When driving into a strong light (i.e. sunlight)
- The sensor generally detects the signals returned from the reflectors on a vehicle ahead. Therefore, the system may not function properly under the following conditions:
  - When the reflectors of the vehicle ahead are positioned high or close each other (including a small vehicle such as motorcycles).
  - When the sensor gets dirty or and it is impossible to detect the distance from the vehicle ahead.
  - When the reflectors on the vehicle ahead is missing, damaged or covered.
  - When the reflector of the vehicle ahead is covered with dirt, snow and road spray.
  - When visibility is low (such as rain, fog, snow, etc.).
  - When snow or road spray from traveling vehicles are raised up.
  - When dense exhaust or other smoke (black smoke) from vehicles reduces the sensor visibility.
  - When excessively heavy baggage is loaded in the rear seat or the luggage room of vehicle.
  - When abruptly accelerating or decelerating.
  - On steep downhill or roads with sharp curves.
  - When there is a highly reflective object near the vehicle ahead (i.e. very close to other vehicle, signboard, etc.).
  - While towing a trailer or other vehicle.
- Depending on certain road conditions (curved, beginning of a curve), vehicle conditions (steering position, vehicle position), or preceding vehicle's conditions (position in lane, etc.), the system may not function properly.
- The system may not function in offset conditions.
- The system may not function when the distance to the vehicle ahead is extremely close.
- The system detect highly reflective objects such as reflectors, signs, white markers, and other stationary objects on the road or near the traveling lane, and when in extreme conditions, detection of these objects may cause the system to function.
- The system is designed to automatically check the sensor's functionality. If the sensor is covered with ice, a transparent or translucent plastic bag, etc., the system may not detect them. In these instances the system may not be able to warn properly. Be sure to check and clean the sensor regularly.
- Excessive noise will interfere with the warning chime sound, and the chime may not be heard.
- Never step in under the brake pedal to avoid an accident when IBA system turns ON.

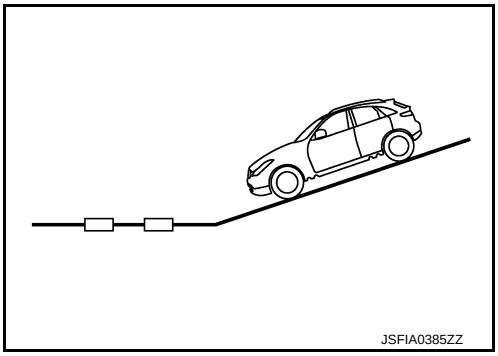

- Sudden appearance of the vehicle in front (i.e. it abruptly cuts in) may not be detected and the system may not warn soon enough.
- The system will be cancelled automatically with a beep sound and the IBA OFF indicator lamp will illuminate under the following conditions:
  - When the sensor window is dirty
  - When the system malfunctions

REMOVAL AND INSTALLATION

IBA OFF SWITCH

Removal and Installation

INFOID:0000000009012567

REMOVAL

1. Remove instrument lower panel. Refer to IP-13, "Exploded View".
2. Disengage the pawl. Then remove IBA OFF switch.

INSTALLATION

Install in the reverse order of removal.