SECTION STR
STARTING SYSTEM

CONTENTS

PRECAUTION

PRECAUTIONS

Precaution for Supplemental Restraint System (SRS) "AIR BAG" and "SEAT BELT PRE-TENSIONER"

INFOID:0000000009011413

The Supplemental Restraint System such as “AIR BAG” and “SEAT BELT PRE-TENSIONER”, used along with a front seat belt, helps to reduce the risk or severity of injury to the driver and front passenger for certain types of collision. Information necessary to service the system safely is included in the “SRS AIR BAG” and “SEAT BELT” of this Service Manual.

WARNING:

Always observe the following items for preventing accidental activation.

- **To avoid rendering the SRS inoperative, which could increase the risk of personal injury or death in the event of a collision that would result in air bag inflation, all maintenance must be performed by an authorized NISSAN/INFINITI dealer.**
- **Improper maintenance, including incorrect removal and installation of the SRS, can lead to personal injury caused by unintentional activation of the system. For removal of Spiral Cable and Air Bag Module, see “SRS AIR BAG”.**
- **Never use electrical test equipment on any circuit related to the SRS unless instructed to in this Service Manual. SRS wiring harnesses can be identified by yellow and/or orange harnesses or harness connectors.**

PRECAUTIONS WHEN USING POWER TOOLS (AIR OR ELECTRIC) AND HAMMERS

WARNING:

Always observe the following items for preventing accidental activation.

- **When working near the Air Bag Diagnosis Sensor Unit or other Air Bag System sensors with the ignition ON or engine running, never use air or electric power tools or strike near the sensor(s) with a hammer. Heavy vibration could activate the sensor(s) and deploy the air bag(s), possibly causing serious injury.**
- **When using air or electric power tools or hammers, always switch the ignition OFF, disconnect the battery, and wait at least 3 minutes before performing any service.**

Precautions for Removing of Battery Terminal

INFOID:0000000009871095

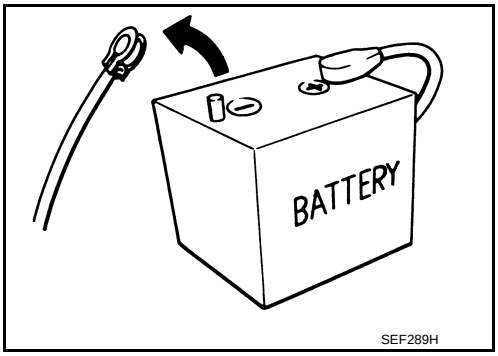

- When removing the 12V battery terminal, turn OFF the ignition switch and wait at least 30 seconds.
  NOTE:
  ECU may be active for several tens of seconds after the ignition switch is turned OFF. If the battery terminal is removed before ECU stops, then a DTC detection error or ECU data corruption may occur.
- For vehicles with the 2-batteries, be sure to connect the main battery and the sub battery before turning ON the ignition switch.
  NOTE:
  If the ignition switch is turned ON with any one of the terminals of main battery and sub battery disconnected, then DTC may be detected.
- After installing the 12V battery, always check "Self Diagnosis Result" of all ECUs and erase DTC.
  NOTE:
  The removal of 12V battery may cause a DTC detection error.

PREPARATION

PREPARATION

Special Service Tools

INFOID:0000000009011414

Tool number (Kent-Moore No.) Tool name		Description
— (—) Model GR8-1200 NI Multitasking battery and electrical diagnostic station	 AWIIA1239ZZ	Tests batteries, starting and charging systems and charges batteries. For operating instructions, refer to diagnostic station instruction manual.

Commercial Service Tools

INFOID:0000000009011415

Tool name		Description
Power tool	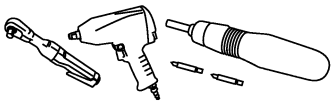 PIIB1407E	Loosening bolts, nuts and screws

SYSTEM DESCRIPTION

COMPONENT PARTS

Component Parts Location

INFOID:0000000009011416

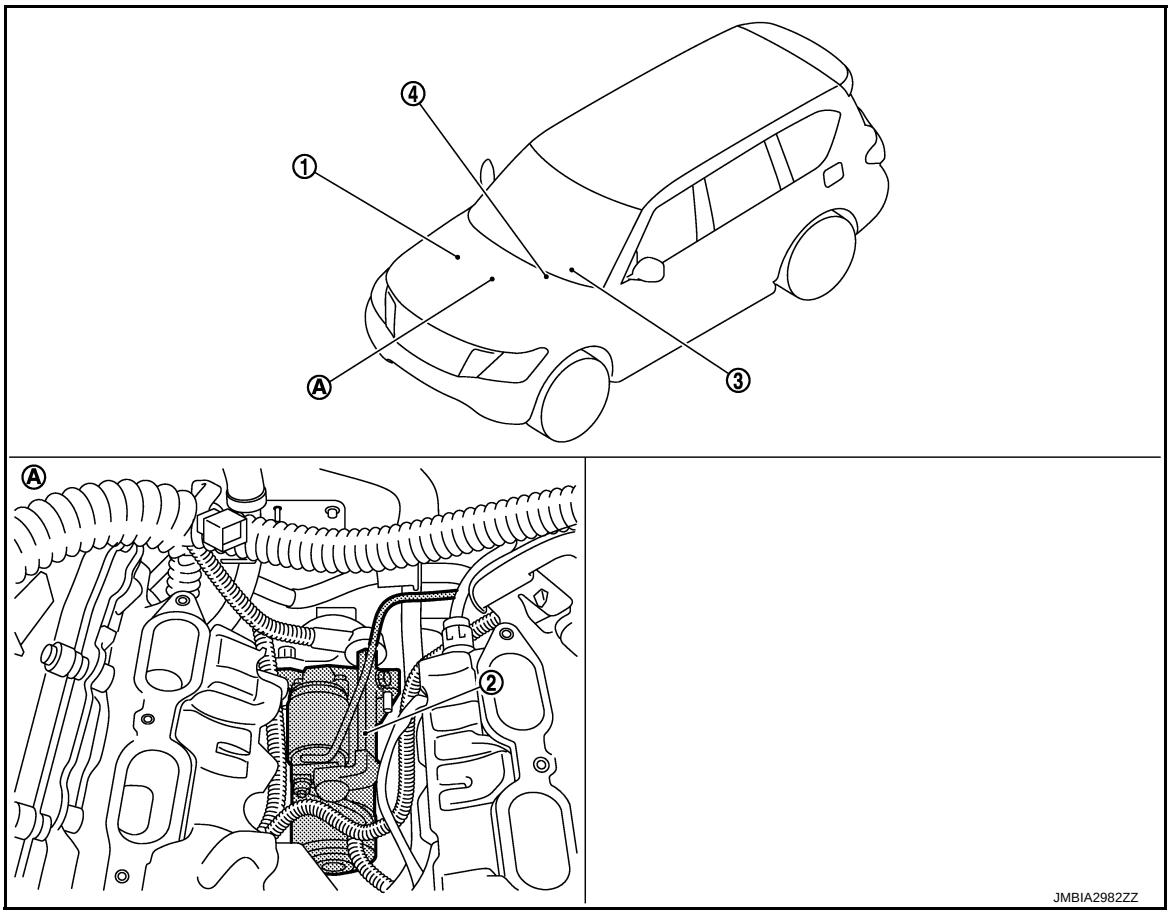

1. IPDM E/R
   Refer to PCS-4, "Component Parts Location".
2. Starter motor
3. TCM
   Refer to TM-11, "A/T CONTROL SYSTEM : Component Parts Location".
4. BCM
   Refer to BCS-4, "BODY CONTROL SYSTEM : Component Parts Location".

A. Engine

Component Description

INFOID:0000000009011417

Component part	Description
BCM	BCM controls the starter relay inside IPDM E/R.
IPDM E/R	CPU inside IPDM E/R controls the starter control relay.
Starter motor	The starter motor plunger closes and the motor is supplied with battery power, which in turn cranks the engine, when the “S” terminal is supplied with electric power.
TCM	TCM supplies power to the starter relay and starter control relay inside IPDM E/R when the selector lever is shifted to the P or N position.

SYSTEM

System Diagram

INFOID:0000000009011418

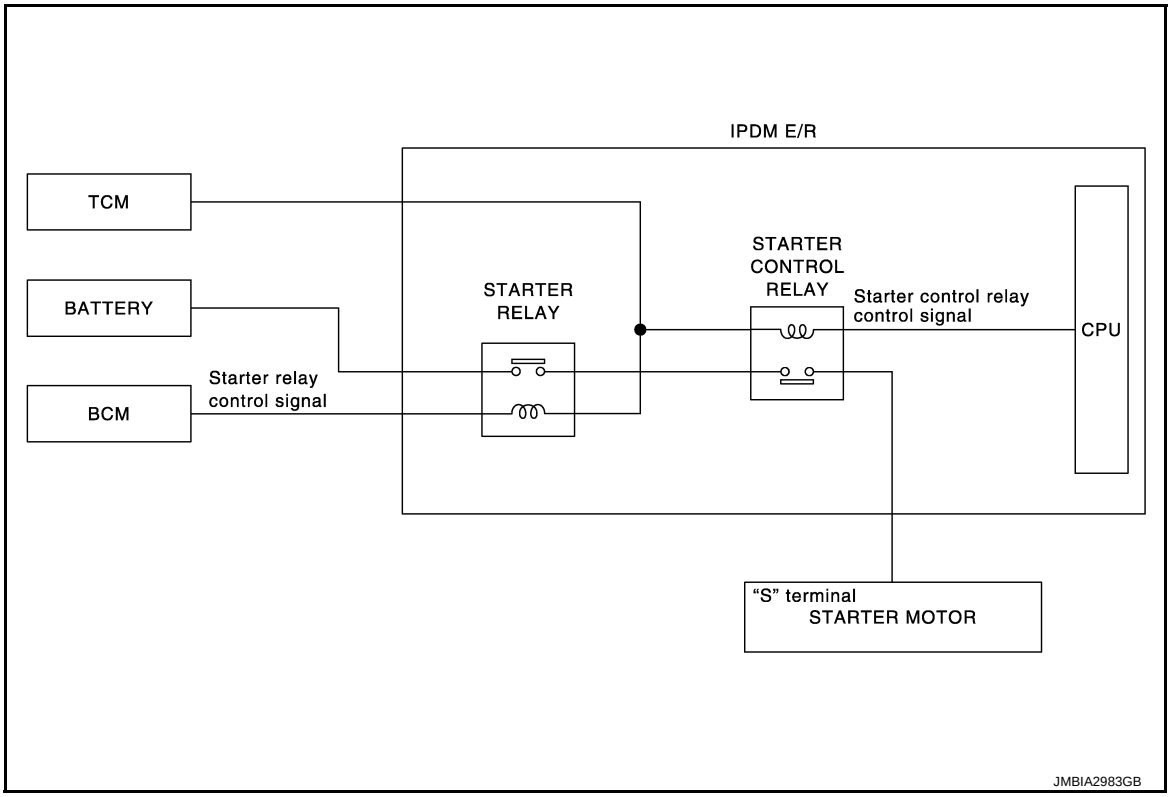

System Description

INFOID:0000000009011419

- When selector lever is P or N, power is supplied to starter relay and starter control relay by TCM. And BCM and IPDM E/R (CPU) detect selector lever P/N condition by the inputted signal.
- When starter operating condition is satisfied, IPDM E/R turns starter control relay ON by starter control relay control signal.
- When engine cranking condition is satisfied, BCM turns starter relay ON by starter relay control signal.
- Then battery power is supplied to starter motor ("S" terminal) through starter control relay and starter relay. And IPDM E/R (CPU) detect starter relay condition by the inputted signal.

WIRING DIAGRAM

STARTING SYSTEM

Wiring Diagram

INFOID:0000000009011420

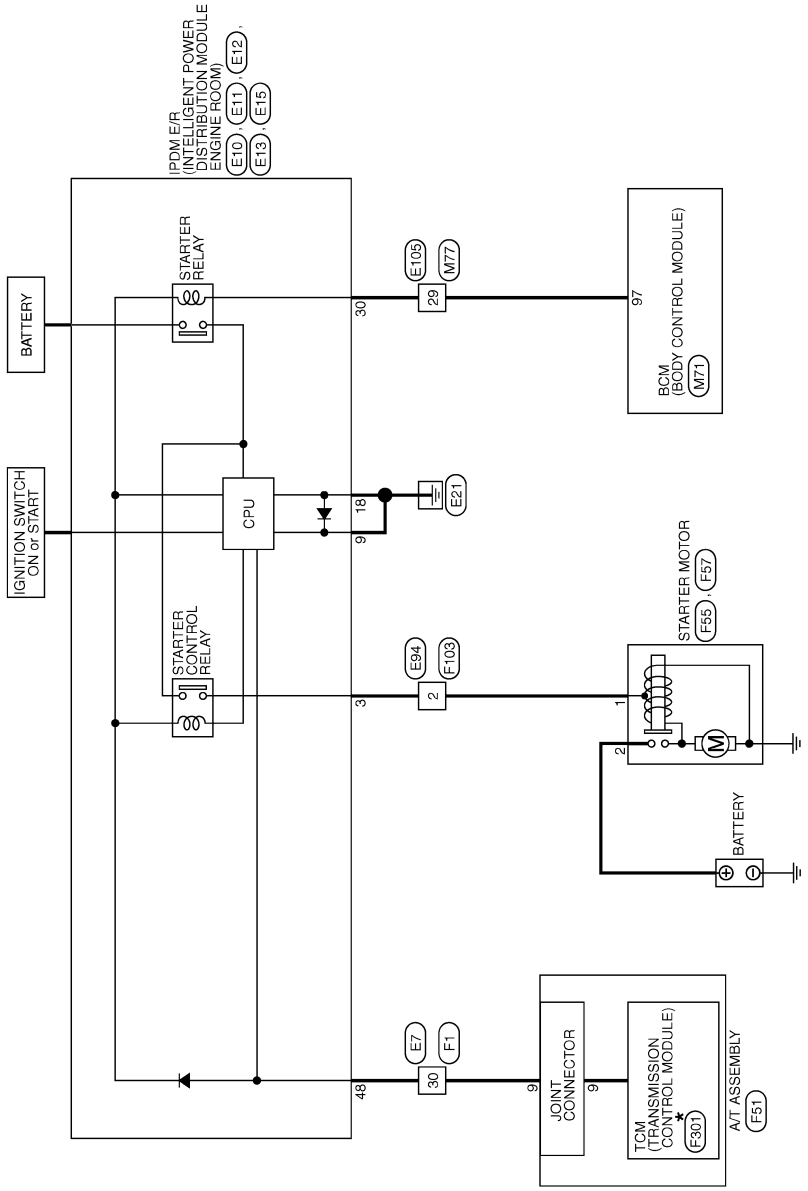

*: This connector is not shown in "Harness Layout".

STARTING SYSTEM

2010/05/13

JCBWM2110GB

STARTING SYSTEM

Connector No.	E7
Connector Name	WIRE TO WIRE
Connector Type	TH32MW-NH

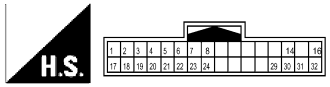

Terminal No.	Color Of Wire	Signal Name [Specification]
1	W	-
2	G	-
3	L/O	-
4	LG	-
5	W/L	-
6	G/O	-
7	L/R	-
8	LG/R	-
14	R	-
16	SB	-
17	R/W	-
18	Y/G	-
19	BR/Y	-
20	P/B	-
21	R/B	-
22	Y	-
23	BR	-
24	P/L	-
29	P	-
30	BR	-
31	L	-
32	P	-

Connector No.	E10
Connector Name	IPDM E/R (INTELLIGENT POWER DISTRIBUTION MODULE ENGINE ROOM)
Connector Type	M06FW-LC

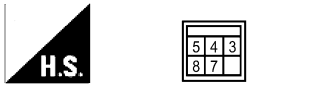

Terminal No.	Color Of Wire	Signal Name [Specification]
3	R	-
4	L	-
5	P/L	-
7	W/G	-
8	W	-

Connector No.	E11
Connector Name	IPDM E/R (INTELLIGENT POWER DISTRIBUTION MODULE ENGINE ROOM)
Connector Type	M06FB-LC

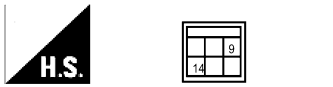

Terminal No.	Color Of Wire	Signal Name [Specification]
9	B	-
14	L	-

Connector No.	E12
Connector Name	IPDM E/R (INTELLIGENT POWER DISTRIBUTION MODULE ENGINE ROOM)
Connector Type	NS08FBR-CS

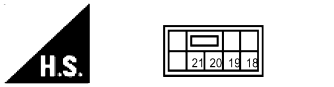

Terminal No.	Color Of Wire	Signal Name [Specification]
18	B	-
19	V	-
20	W	-
21	L	-

Connector No.	E13
Connector Name	IPDM E/R (INTELLIGENT POWER DISTRIBUTION MODULE ENGINE ROOM)
Connector Type	TH12FW-NH

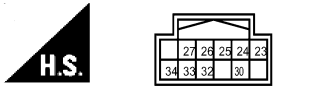

Terminal No.	Color Of Wire	Signal Name [Specification]
23	GR/R	-
24	W/G	-
25	L/Y	-
26	P	-
27	L	-
30	R/W	-
32	LG	-
33	R	-
34	G	-

Connector No.	E15
Connector Name	IPDM E/R (INTELLIGENT POWER DISTRIBUTION MODULE ENGINE ROOM)
Connector Type	NS16FW-CS

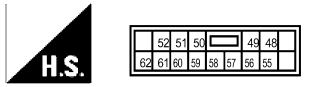

Terminal No.	Color Of Wire	Signal Name [Specification]
48	BR	-
49	R	-
50	LG/B	-
51	BR/Y	-
52	W	-
55	O	-
56	L	-
57	V	-
58	BR/R	-
59	W/B	-
60	V/R	-
61	W	-
62	SB	-

Connector No.	E94
Connector Name	WIRE TO WIRE
Connector Type	M06MW-LC

Terminal No.	Color Of Wire	Signal Name [Specification]
1	G/Y	-
2	R	-
3	V	-
4	R	-
5	G/R	-
6	B/R	-

JRBWC3509GB

STARTING SYSTEM

Connector No.	E105
Connector Name	WIRE TO WIRE
Connector Type	TH80MW-CS16-TM4

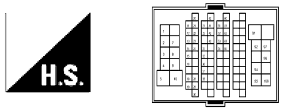

Terminal No.	Color Of Wire	Signal Name [Specification]
1	L	-
2	L/W	-
3	R/B	-
4	L	-
5	Y	-
7	W/G	-
8	P/B	-
9	W/B	-
10	G	-
11	L	-
12	P	-
13	P/B	-
14	BR	-
15	L/B	-
16	SB	-
18	BR	-
19	Y/G	-
20	BR/Y	-
21	Y/V	-
22	L	-
23	Y	-
24	L/W	-
28	O	-
29	R/W	-
30	L/B	-
31	Y	-
32	GR/R	-
34	Y	-
35	R	-
36	B/R	-
37	G/Y	-
38	G	-
40	SB	-
41	W/R	-
42	R	-
43	V	-
51	L/O	-
52	BR/W	-
53	BR/Y	-
54	GR/L	-
60	W	-
61	B	-
62	R	-
63	G	-
64	SHIELD	-
91	BR	-
92	L/W	-
94	Y/B	-
95	G/R	-
97	R	-
98	G/B	-
100	W/R	-

Connector No.	F1
Connector Name	WIRE TO WIRE
Connector Type	TH32FW-NH

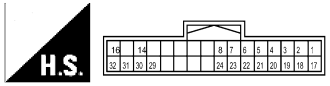

Terminal No.	Color Of Wire	Signal Name [Specification]
1	W	-
2	G	-
3	L/O	-
4	LG	-
5	W/L	-
6	G/O	-
7	L/R	-
8	LG/R	-
14	R	-
16	SB	-
17	R/W	-
18	Y/G	-
19	BR/Y	-
20	P/B	-
21	R/B	-
22	Y	-
23	BR/W	-
24	P/L	-
29	P	-
30	BR	-
31	L	-
32	P	-

Connector No.	F51
Connector Name	A/T ASSEMBLY
Connector Type	RK10FG

Terminal No.	Color Of Wire	Signal Name [Specification]
1	V	IGNITION POWER SUPPLY
2	P	BATTERY POWER SUPPLY
3	L	CAN-H
4	SB	K-LINE
5	B	GROUND
6	V	IGNITION POWER SUPPLY
7	R	BACK-UP LAMP RELAY
8	P	CAN-L
9	BR	STARTER RELAY
10	B	GROUND

Connector No.	F55
Connector Name	STARTER MOTOR
Connector Type	X01FGY

Terminal No.	Color Of Wire	Signal Name [Specification]
1	R	-

Connector No.	F57
Connector Name	STARTER MOTOR
Connector Type	E-BA8

Terminal No.	Color Of Wire	Signal Name [Specification]
2	B/R	-

Connector No.	F103
Connector Name	WIRE TO WIRE
Connector Type	M06FW-LC

Terminal No.	Color Of Wire	Signal Name [Specification]
1	G/Y	-
2	R	-
3	V	-
4	R	-
5	G/R	-
6	B/R	-

JRBWC3510GB

STARTING SYSTEM

Connector No.	F301
Connector Name	TCM (TRANSMISSION CONTROL MODULE)
Connector Type	SP10FG

Terminal No.	Color Of Wire	Signal Name [Specification]
1	-	IGNITION POWER SUPPLY
2	-	BATTERY POWER SUPPLY
3	-	CAN-H
4	-	K-LINE
5	-	GROUND
6	-	IGNITION POWER SUPPLY
7	-	BACK-UP LAMP RELAY
8	-	CAN-L
9	-	STARTER RELAY
10	-	GROUND

Connector No.	M71
Connector Name	BCM (BODY CONTROL MODULE)
Connector Type	TH40FW-NH

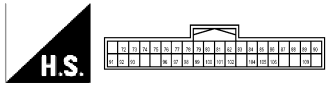

Terminal No.	Color Of Wire	Signal Name [Specification]
72	P	PUDDLE LAMP CONT
73	W	ON IND
74	Y/B	TRAILER TURN SIG RH CONT
75	LG/R	DRIVER DOOR REQUEST SW
76	SB	PUSH SW
77	O/L	TRAILER TURN SIG LH CONT
78	P/B	DRIVER DOOR ANT+
79	V	DRIVER DOOR ANT-
80	LG/B	PASSENGER DOOR ANT+
81	Y/R	PASSENGER DOOR ANT-
82	W/G	BACK DOOR ANT+
83	B/W	BACK DOOR ANT-
84	BR	ROOM ANT1+
85	Y	ROOM ANT1-
86	W	ROOM ANT2+
87	B	ROOM ANT2-
88	V	LAGGAGE ROOM ANT+
89	G	LAGGAGE ROOM ANT-
90	Y	PUSH-BTN IGN SW ILL PWR
91	O	LOCK IND
92	L	LOW SIDE PUSH LED
93	GR/R	I-KEY WARN BUZZER
96	BR	ACC RELAY CONT
97	R/W	STARTER RELAY CONT
98	O	IGN RELAY (IPDM E/R) CONT
99	R	IGN RELAY (F/B) CONT
100	P/L	PASSENGER DOOR REQUEST SW
101	W/B	IGN PWR SPLY 2
102	BR	SHIFT N/P
104	R/B	A/T SHIFT SELECT PWR SPLY
105	O/L	STOP LAMP SW 2
106	Y/G	BLWR FAN MTR RELAY CONT
109	L/W	ACC IND

Connector No.	M77
Connector Name	WIRE TO WIRE
Connector Type	TH80FW-CS16-TM4

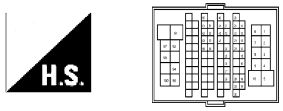

Terminal No.	Color Of Wire	Signal Name [Specification]
1	W	-
2	L/W	-
3	R/B	-
4	L	-
5	Y	-
6	SB	-
7	W/G	-
8	P/B	-
9	W/B	-
10	G	-
11	L	-
12	P	-
13	P/B	-
14	BR	-
15	O/L	-
16	SB	-
18	BR	-
19	Y/G	-
20	BR/Y	-
21	V	-
22	L	-
23	Y	-
24	L/W	-
28	O	-
29	R/W	-
30	O/L	-
31	Y	-
32	GR/R	-
34	Y	-
35	R	-
36	B/O	-
37	G/Y	-
38	G	-
40	SB	-
41	W/R	-
42	R	-
43	V	-
51	L/O	-
52	BR/W	-
53	BR/Y	-
54	GR/L	-
60	W	-
61	B	-
62	G	-
63	R	-
64	SHIELD	-
91	BR	-
92	L/W	-
94	Y/B	-
95	L/R	-
97	R	-
98	O/L	-
100	W/B	-

JRBWC3511GB

BASIC INSPECTION

DIAGNOSIS AND REPAIR WORK FLOW

Work Flow (With GR8-1200 NI)

INFOID:0000000009011421

STARTING SYSTEM DIAGNOSIS WITH GR8-1200 NI

To test the starting system, use the following special service tool:

- GR8-1200 NI Multitasking battery and electrical diagnostic station

NOTE:

Refer to the diagnostic station Instruction Manual for proper starting system diagnosis procedures.

OVERALL SEQUENCE

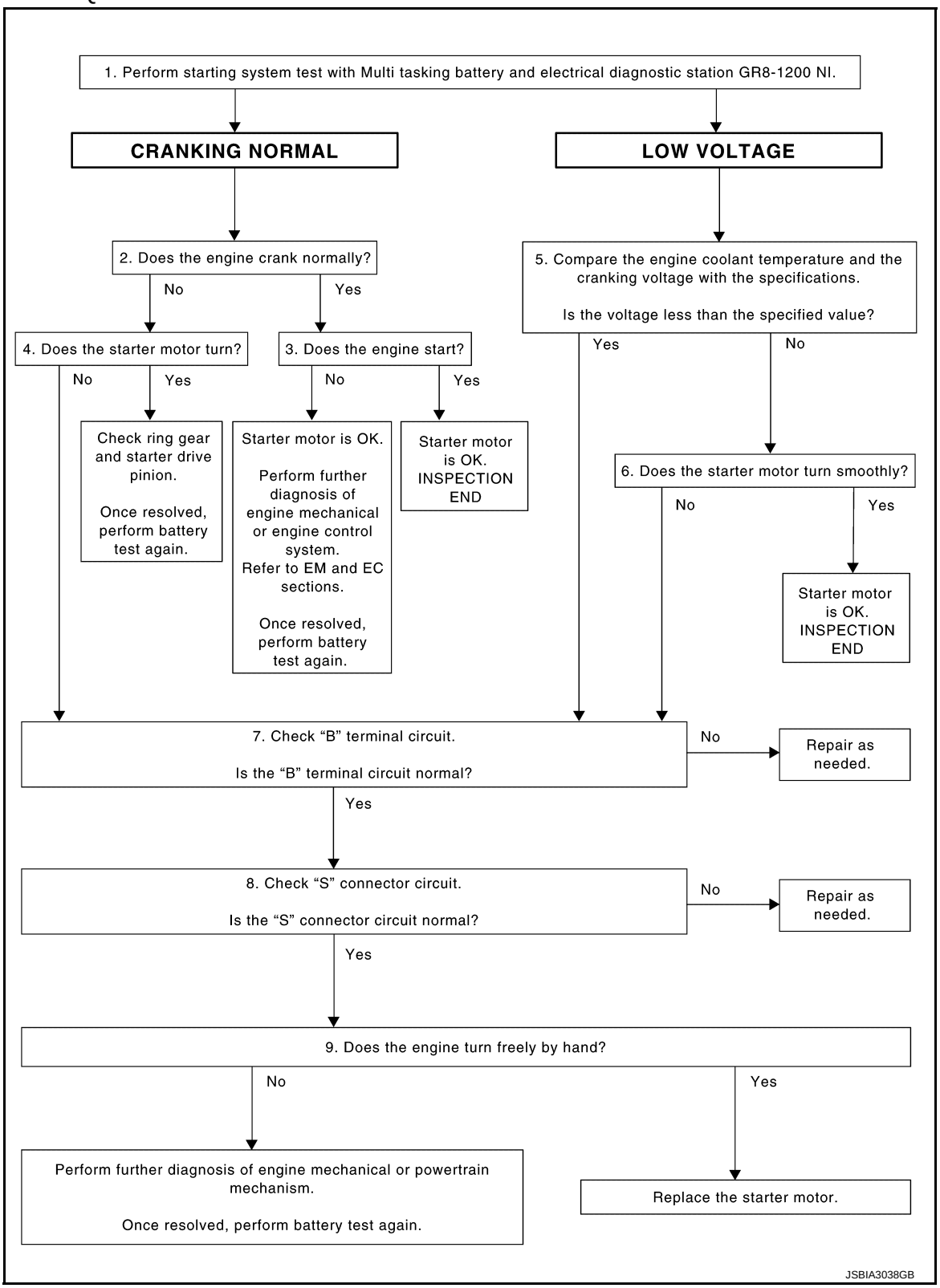

DETAILED FLOW

NOTE:
To ensure a complete and thorough diagnosis, the battery, starter motor and alternator test segments must be done as a set from start to finish.

1. DIAGNOSIS WITH MULTITASKING BATTERY AND ELECTRICAL DIAGNOSTIC STATION GR8-1200 NI

Perform the starting system test with Multitasking battery and electrical diagnostic station GR8-1200 NI. For-details and operating instructions, refer to diagnostic station Instruction Manual.

Test result

CRANKING NORMAL>>GO TO 2.
LOW VOLTAGE>>GO TO 5.
CHARGE BATTERY>>Perform the slow battery charging procedure. (Initial rate of charge is 10A for 12 hours.) Perform battery test again. Refer to diagnostic station instruction manual.
REPLACE BATTERY>>Before replacing battery, clean the battery cable clamps and battery posts. Perform battery test again. Refer to diagnostic station instruction manual. If second test result is “REPLACE BATTERY”, then do so. Perform battery test again to confirm repair.

2. CRANKING CHECK

Check that the starter motor operates correctly.

Does the engine crank normally?

YES >> GO TO 3.
NO >> GO TO 4.

3. ENGINE START CHECK

Check that the engine starts.

Does the engine start?

YES >> Starter motor is OK. INSPECTION END
NO >> Perform further diagnosis of engine mechanical or engine control system. Refer EM and EC sections. Once resolved, perform battery test again.

4. STARTER MOTOR ACTIVATION

Check that the starter motor operates.

Does the starter motor turn?

YES >> Check ring gear and starter motor drive pinion. Once resolved, perform battery test again.
NO >> GO TO 7.

5. COMPARISON BETWEEN ENGINE COOLANT AND CRANKING VOLTAGE

Compare the engine coolant temperature and the cranking voltage with the specifications.

Minimum Specification of Cranking Voltage Referencing Coolant Temperature

Engine coolant temperature [°C (°F)]	Voltage [V]
–30 to –20 (–22 to –4)	8.6
–19 to –10 (–2 to 14)	9.1
–9 to 0 (16 to 32)	9.5
More than 1 (More than 34)	9.9

Is the voltage less than the specified value?

YES >> GO TO 7.
NO >> GO TO 6.

6. STARTER OPERATION

Check the starter operation status.

Does the starter motor turn smoothly?

YES >> Starter motor is OK. INSPECTION END
NO >> GO TO 7.

7. “B” TERMINAL CIRCUIT INSPECTION

Check “B” terminal circuit. Refer to STR-15, "Diagnosis Procedure".

Is “B” terminal circuit normal?

YES >> GO TO 8.
NO >> Repair as needed.

8. “S” CONNECTOR CIRCUIT INSPECTION

Check “S” connector circuit. Refer to STR-16, "Diagnosis Procedure".

Is “S” connector circuit normal?

YES >> GO TO 9.
NO >> Repair as needed.

9. ENGINE ROTATION STATUS

Check that the engine can be rotated by hand.

Does the engine turn freely by hand?

YES >> Replace starter motor.
NO >> Perform further diagnosis of engine mechanical or powertrain mechanism. Once resolved, perform battery test again using Multitasking battery and electrical diagnostic station GR8-1200 NI.Refer to the diagnostic station Instruction Manual for proper testing procedures.

Work Flow (Without GR8-1200 NI)

INFOID:0000000009011422

OVERALL SEQUENCE

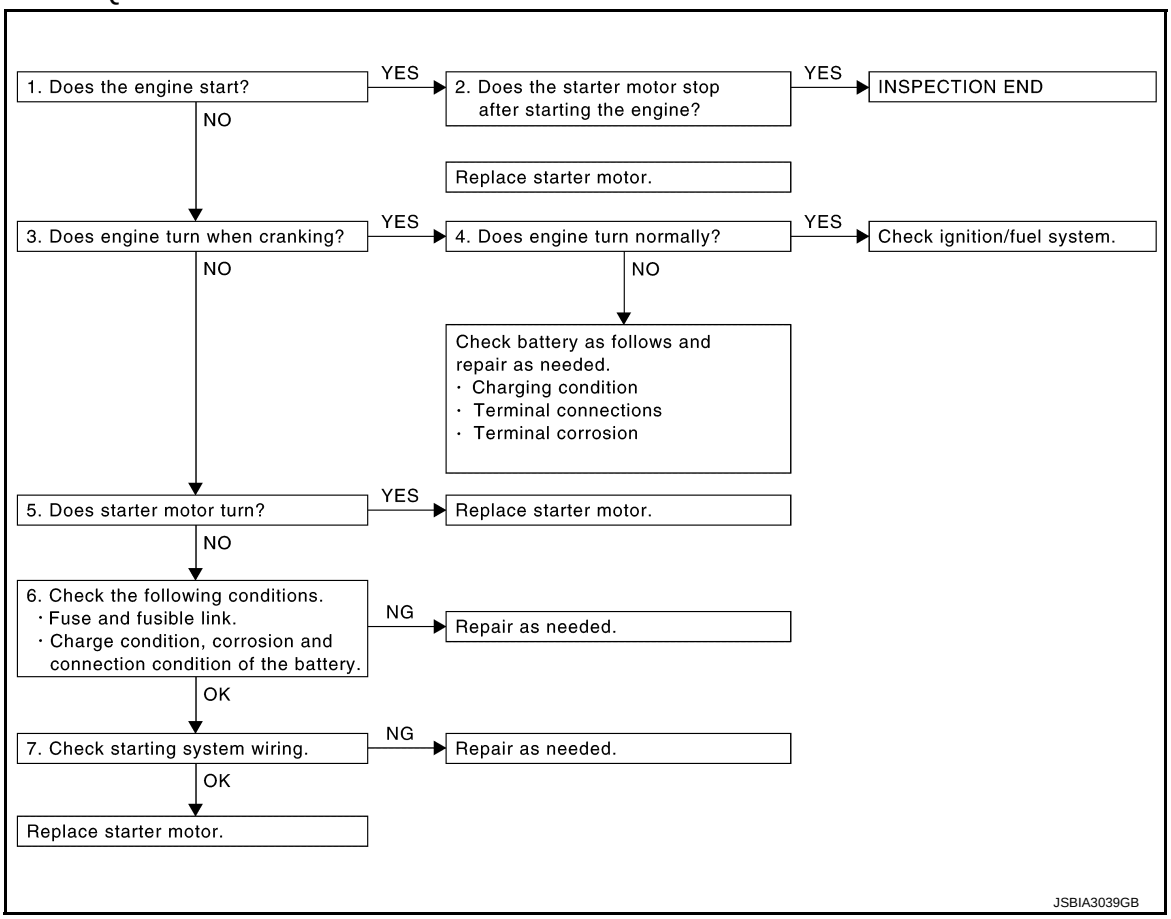

DETAILED FLOW

NOTE:
If any malfunction is found, immediately disconnect the battery cable from the negative terminal.

1. CHECK ENGINE START

Crank the engine and check that the engine starts.

Does the engine start?

YES >> GO TO 2.
NO >> GO TO 3.

2. CHECK THAT THE STARTER MOTOR STOPS

Check that the starter motor stops after starting the engine.

Does the starter motor stop?

YES >> INSPECTION END

NO >> Replace starter motor. Refer to STR-19, "Removal and Installation".

3. CHECK THAT THE ENGINE TURNS WHEN CRANKING

Check that the engine turns when cranking.

Does engine turn when cranking?

YES >> GO TO 4.
NO >> GO TO 5.

4. CHECK THE ENGINE SPEED WHEN CRANKING

Check that the engine speed is not low when cranking.

Does engine turn normally?

YES >> Check ignition/fuel system.
NO >> Check charge condition, corrosion and connection condition of the battery. Refer to PG-114, "Work Flow".

5. CHECK STARTER MOTOR ACTIVATION

Check that the starter motor runs at cranking.

Does starter motor turn?

YES >> Replace starter motor. Refer to STR-19, "Removal and Installation".
NO >> GO TO 6.

6. CHECK POWER SUPPLY CIRCUIT

Check the following conditions.
- Fuse and fusible link
- Charge condition, corrosion and connection condition of the battery. Refer to PG-114, "Work Flow".

Are these inspection results normal?

YES >> GO TO 7.
NO >> Repair as needed.

7. CHECK STARTING SYSTEM WIRING

Check the following.
- “B” terminal circuit. Refer to STR-15, "Diagnosis Procedure".
- “S” connector circuit. Refer to STR-16, "Diagnosis Procedure".

Are these inspection results normal?

YES >> Replace starter motor. Refer to STR-19, "Removal and Installation".
NO >> Repair as needed.

DTC/CIRCUIT DIAGNOSIS

B TERMINAL CIRCUIT

Diagnosis Procedure

INFOID:0000000009011423

CAUTION:
Perform diagnosis under the condition that engine cannot start by the following procedure.
1. Remove fuel pump fuse.
2. Crank or start the engine (where possible) until the fuel pressure is released.

1. CHECK “B” TERMINAL CIRCUIT

1. Turn ignition switch OFF.
2. Check that starter motor “B” terminal connection is clean and tight.
3. Check voltage between starter motor “B” terminal and ground.

(+)		(–)	Voltage
Starter motor			
Connector	Terminal		
F57	2	Ground	Battery voltage

Is the inspection result normal?

YES >> GO TO 2.
NO >> Check harness between battery and starter motor for open circuit.

2. CHECK BATTERY CABLE CONNECTION STATUS (VOLTAGE DROP TEST)

1. Shift A/T selector lever to “P” or “N” position.
2. Check voltage between battery positive terminal and starter motor “B” terminal.

(+)	(–)		Condition	Voltage (V) (Approx.)
	Starter motor			
	Connector	Terminal		
Battery positive terminal	F57	2	When the ignition switch is in START position	Less than 0.5

Is the inspection result normal?

YES >> GO TO 3.
NO >> Check harness between the battery and the starter motor for poor continuity.

3. CHECK GROUND CIRCUIT STATUS (VOLTAGE DROP TEST)

1. Shift A/T selector lever to “P” or “N” position.
2. Check voltage between starter motor case and battery negative terminal.

(+)	(–)	Condition	Voltage (V) (Approx.)
Starter motor case	Battery negative terminal	When the ignition switch is in START position	Less than 0.2

Is the inspection result normal?

YES >> “B” terminal circuit is OK. Further inspection is necessary. Refer to STR-10, "Work Flow (With GR8-1200 NI)" or STR-13, "Work Flow (Without GR8-1200 NI)".
NO >> Check the starter motor case and ground for poor continuity.

S CONNECTOR CIRCUIT

Diagnosis Procedure

INFOID:0000000009011424

CAUTION:
Perform diagnosis under the condition that engine cannot start by the following procedure.
1. Remove fuel pump fuse.
2. Crank or start the engine (where possible) until the fuel pressure is released.

1. CHECK “S” CONNECTOR CIRCUIT

1. Turn ignition switch OFF.
2. Disconnect starter motor connector.
3. Shift A/T selector lever to “P” or “N” position.
4. Check voltage between starter motor harness connector and ground.

(+)		(–)	Condition	Voltage
Starter motor				
Connector	Terminal			
F55	1	Ground	When the ignition switch is in START position	Battery voltage

Is the inspection result normal?

YES >> “S” connector circuit is OK. Further inspection is necessary. Refer to STR-10, "Work Flow (With GR8-1200 NI)" or STR-13, "Work Flow (Without GR8-1200 NI)".
NO >> GO TO 2.

2. CHECK HARNESS CONTINUITY (OPEN CIRCUIT)

1. Turn ignition switch OFF.
2. Disconnect IPDM E/R harness connector.
3. Check continuity between starter motor harness connector and IPDM E/R harness connector.

Starter motor		IPDM E/R		Continuity
Connector	Terminal	Connector	Terminal	
F55	1	E10	3	Existed

Is the inspection result normal?

YES >> Further inspection is necessary. Refer to SEC-46, "Work Flow".
NO >> Repair the harness or connector.

SYMPTOM DIAGNOSIS

STARTING SYSTEM

Symptom Table

INFOID:0000000009011425

Symptom	Reference
No normal cranking	Refer to STR-10, "Work Flow (With GR8-1200 NI)" or STR-13, "Work Flow (Without GR8-1200 NI)".
Starter motor does not rotate	

REMOVAL AND INSTALLATION

STARTER MOTOR

Exploded View

INFOID:0000000009011426

REMOVAL

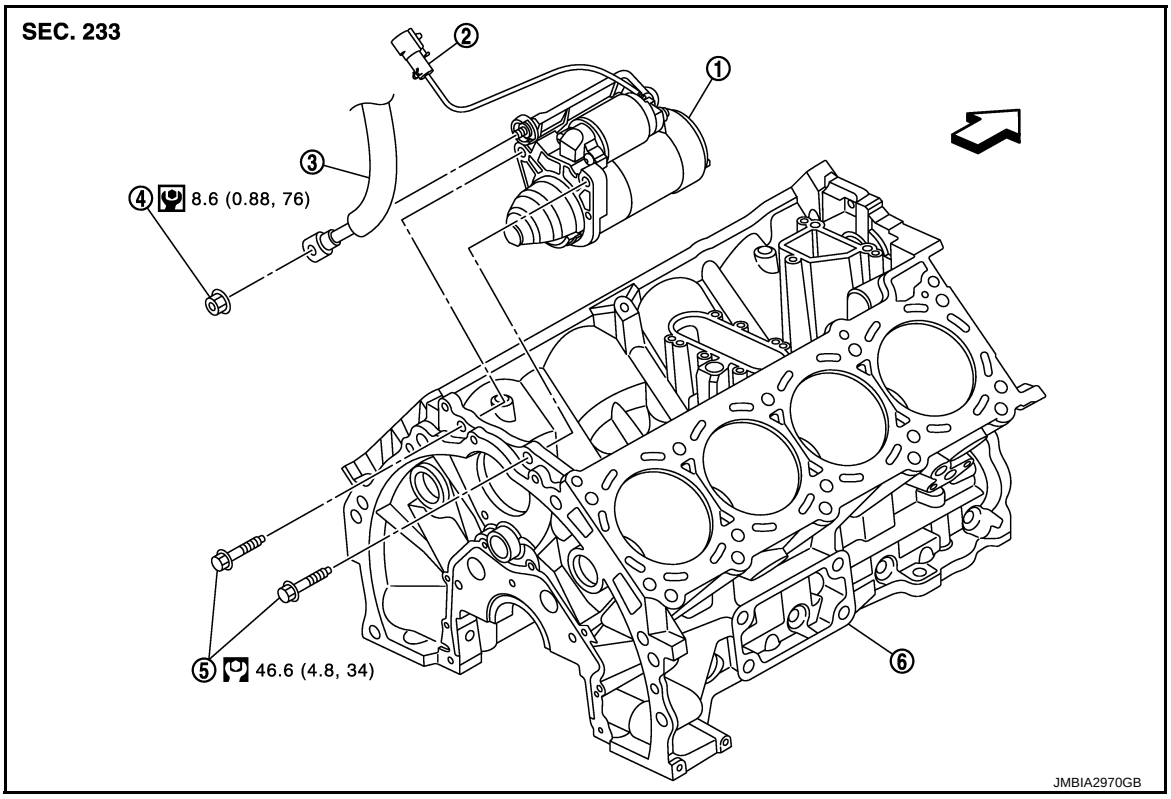

1. Starter motor	2. “S” connector	3. “B” terminal harness
4. “B” terminal nut	5. Starter motor mounting bolt	6. Cylinder block

⇦ : Engine front

: N·m (kg-m, ft-lb)

: N·m (kg-m, in-lb)

DISASSEMBLY

Type: M001T30671

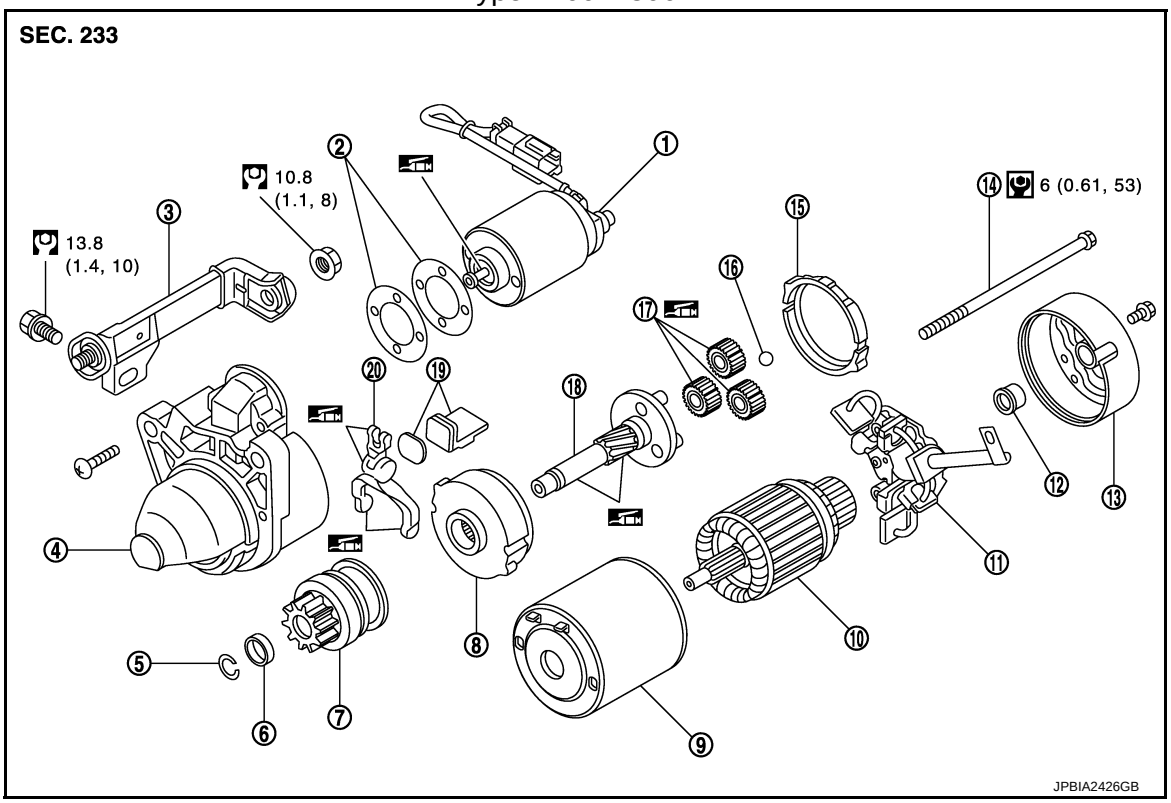

1. Magnetic switch assembly	2. Adjusting plate	3. “B” terminal extension
4. Gear case assembly	5. Stopper ring	6. Stopper
7. Pinion assembly	8. Internal gear	9. Yoke assembly
10. Armature assembly	11. Brush holder assembly	12. Metal RR
13. Rear cover	14. Through bolt	15. Packing
16. Ball	17. Planetary gear	18. Gear shaft
19. Dust cover kit	20. Shift lever	

: High-temperature grease point

: N·m (kg-m, ft-lb)

: N·m (kg-m, in-lb)

NOTE:
Apply high-temperature grease to lubricate the bearing, gears and frictional surface when assembling the starter.

Removal and Installation

INFOID:0000000009011427

REMOVAL

1. Disconnect the battery cable from the negative terminal. Refer to PG-122, "Removal and Installation".
2. Remove engine cover. Refer to EM-26, "Removal and Installation".
3. Remove intake manifold. Refer to EM-31, "Removal and Installation".
4. Remove “B” terminal nut, and then “B” terminal harness.
5. Remove harness clip of “S” connector from heater pipe.
6. Disconnect “S” connector.
7. Remove starter motor mounting bolts.
8. Remove starter motor upward from the vehicle.

INSTALLATION

Note the following item, and then install in the reverse order of removal.

CAUTION:
Be careful to tighten “B” terminal nut to the specified torque.

SERVICE DATA AND SPECIFICATIONS (SDS)

SERVICE DATA AND SPECIFICATIONS (SDS)

Starter Motor

INFOID:0000000009011428

Type			M001T30671
			MITSUBISHI make
			Reduction gear type
System voltage		[V]	12
No-load	Terminal voltage	[V]	11
	Current	[A]	Less than 120
	Revolution	[rpm]	More than 3,220