FRONT & REAR AXLE

SECTION AX

CONTENTS

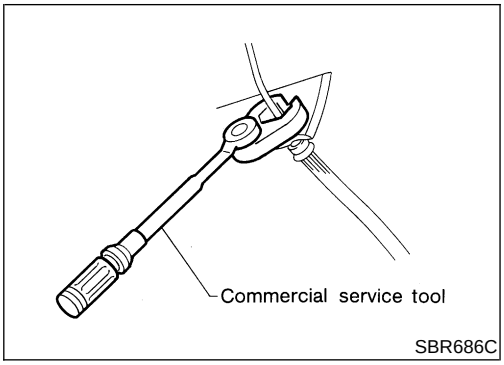

Precautions

PRECAUTIONS

NDAX0001

- **When installing rubber parts, final tightening must be carried out under unladen condition* with tires on ground.**
  ***:Fuel, radiator coolant and engine oil full. Spare tire, jack, hand tools and mats in designated positions.**
- **After installing removed suspension parts, check wheel alignment and adjust if necessary.**
- **Use flare nut wrench when removing or installing brake tubes.**
- **Always torque brake lines when installing.**

Preparation

SPECIAL SERVICE TOOLS

NDAX0002

The actual shapes of Kent-Moore tools may differ from those of special service tools illustrated here.

Tool number (Kent-Moore No.) Tool name	Description	
HT72520000 (J25730-B) Ball joint remover	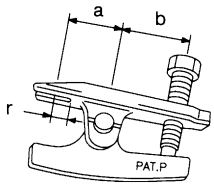 NT546	Removing tie-rod outer end and lower ball joint **a: 33 mm (1.30 in)** **b: 50 mm (1.97 in)** **r: R11.5 mm (0.453 in)**
KV38106700 (J34296) KV38106800 (J34297) Differential side oil seal protector	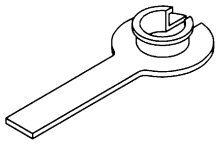 NT147	Installing drive shaft LH: KV38106700 (J34296) RH: KV38106800 (J34297)

COMMERCIAL SERVICE TOOL

NDAX0003

Tool name	Description	
1 Flare nut crowfoot 2 Torque wrench	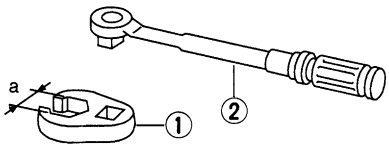 NT360	Removing and installing brake piping **a: 10 mm (0.39 in)**

Noise, Vibration and Harshness (NVH) Troubleshooting

=NDAX0004

NVH TROUBLESHOOTING CHART

NDAX0004S01

Use the chart below to help you find the cause of the symptom. If necessary, repair or replace these parts.

Reference page			—	AX-13	—	AX-5,19	—	AX-4,18	Refer to DRIVE SHAFT in this chart.	Refer to AXLE in this chart.	NVH in ***SU-3*** and ***SU-15***	NVH in ***SU-3*** and ***SU-15***	NVH in ***SU-3*** and ***SU-15***	NVH in ***BR-5***	NVH in ***ST-5***
Possible cause and SUSPECTED PARTS			Excessive joint angle	Joint sliding resistance	Imbalance	Improper installation, looseness	Parts interference	Wheel bearing damage	DRIVE SHAFT	AXLE	SUSPENSION	TIRES	ROAD WHEEL	BRAKES	STEERING
Symptom	DRIVE SHAFT	Noise, Vibration	×	×						×	×	×	×	×	×
		Shake	×		×					×	×	×	×	×	×
	AXLE	Noise				×	×		×		×	×	×	×	×
		Shake				×	×		×		×	×	×	×	×
		Vibration				×	×		×		×	×			×
		Shimmy				×	×				×	×	×	×	×
		Judder				×					×	×	×	×	×
		Poor quality ride or handling				×	×	×			×	×	×		

×: Applicable

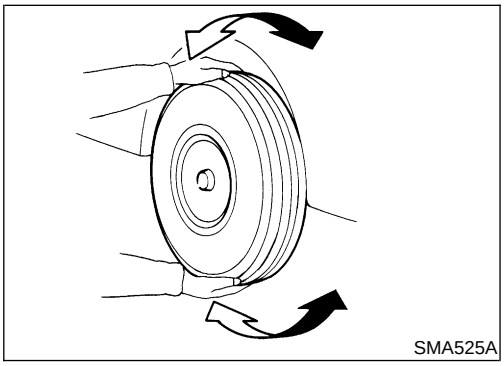

On-vehicle Service

FRONT AXLE PARTS

NDAX0005

Check front axle and front suspension parts for excessive play, cracks, wear and other damage.

- Shake each front wheel to check for excessive play.
- Make sure that the cotter pin is inserted.
- Retighten all nuts and bolts to the specified torque.

Tightening torque:

Refer to *SU-4*, "Components".

GI
MA
EM
LC
EC
FE
AT
AX
SU
BR
ST
RS
BT
HA
SC
EL
IDX

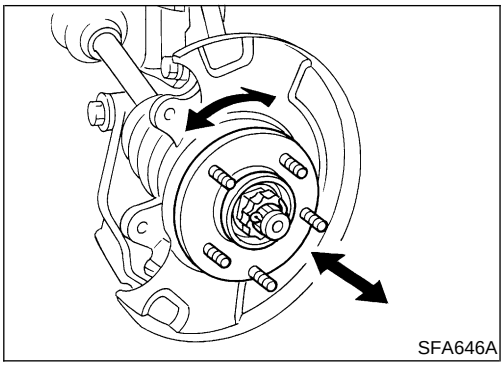

FRONT WHEEL BEARING

NDAX0006

- Check that wheel bearings operate smoothly.
- Check axial end play.

  Axial end play:

  0.05 mm (0.0020 in) or less
- If axial end play is not within specification or wheel bearing does not turn smoothly, replace wheel bearing assembly. Refer to "REMOVAL", AX-6.

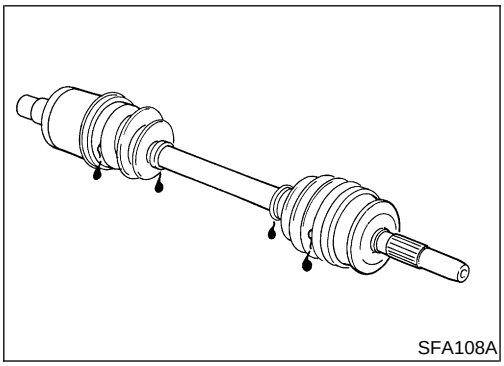

DRIVE SHAFT

NDAX0007

Check for grease leakage and other damage.

Wheel Hub and Knuckle

COMPONENTS

NDAX0008

SEC. 400

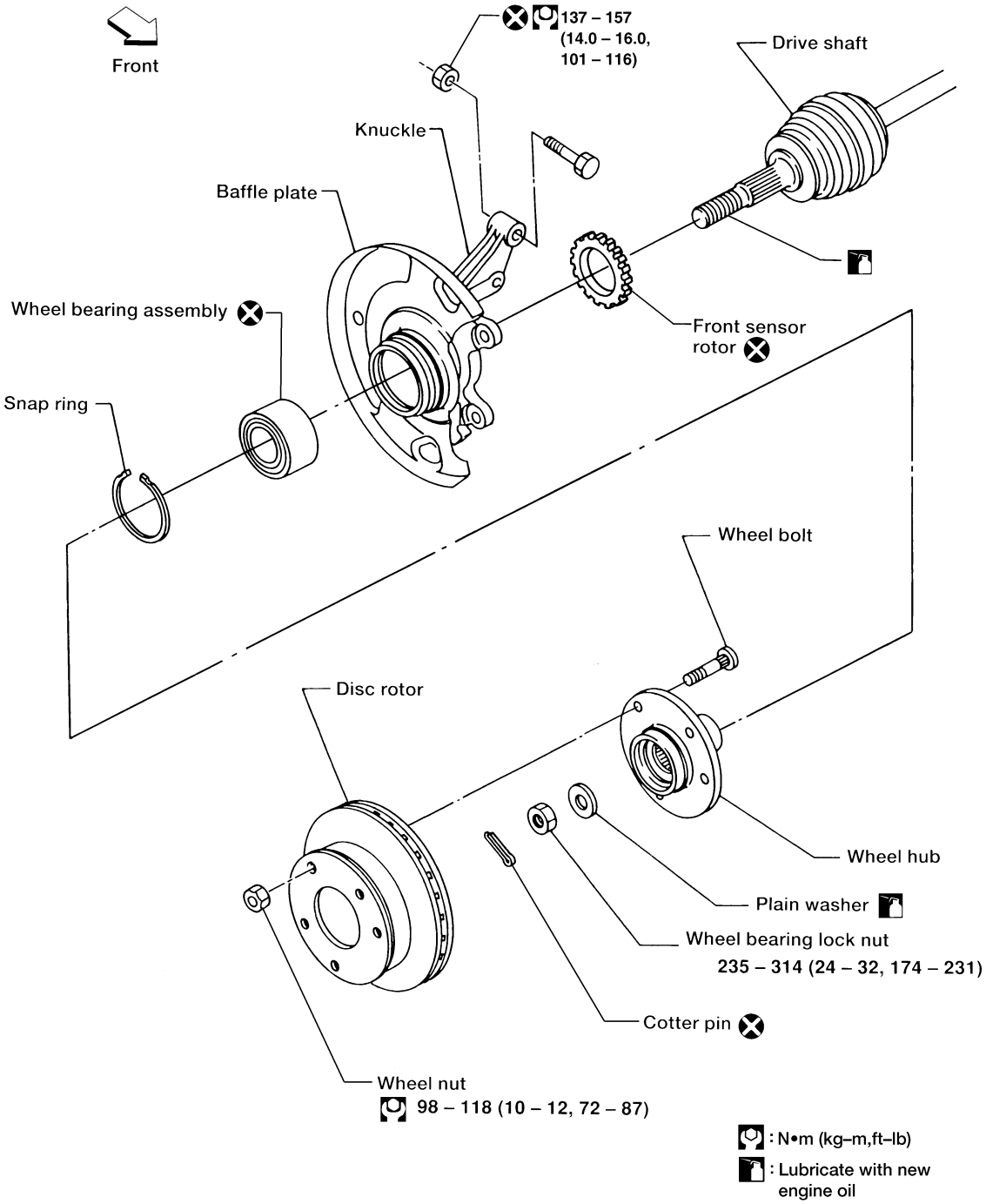

WAX031

REMOVAL

NDAX0009

CAUTION:

Before removing front axle assembly, disconnect ABS wheel sensor from assembly. Move it from front axle assembly area. Failure to do so may result in damage to sensor wires and the sensor becoming inoperative.

1. Remove wheel bearing lock nut.

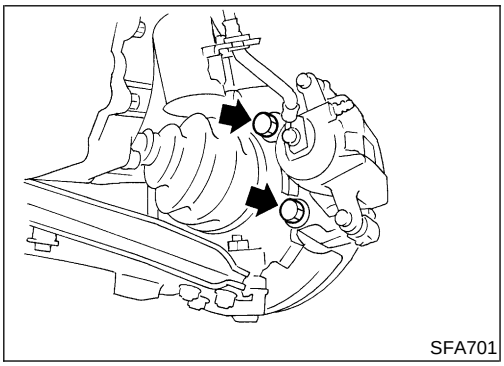

2. Remove brake caliper assembly and rotor.
- **Brake hose need not be disconnected from brake caliper. Suspend brake caliper with wire so as not to stretch brake hose.**
- **Be careful not to depress brake pedal, or caliper piston will pop out.**
- **Make sure brake hose is not twisted.**

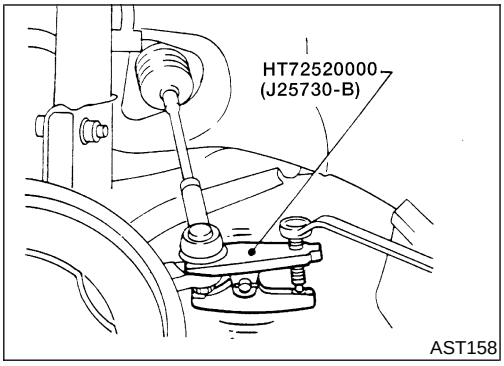

3. Separate tie-rod from knuckle with Tool.
- **Install stud nut on stud bolt with castellated side facing up to prevent damage to stud bolt.**

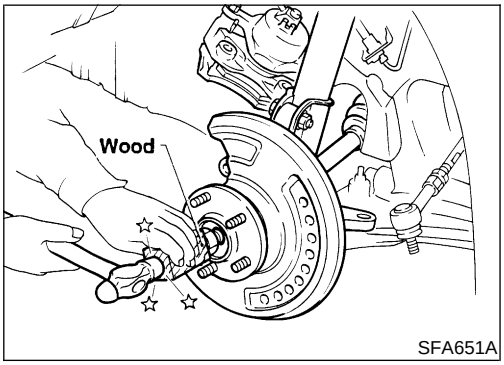

4. Separate drive shaft from knuckle by lightly tapping it. If it is hard to remove, use a puller.
- **When removing drive shaft, cover boots with a shop towel to prevent damage to them.**

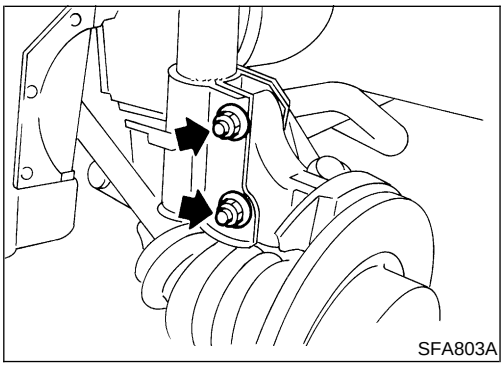

5. Remove strut lower mounting bolts.

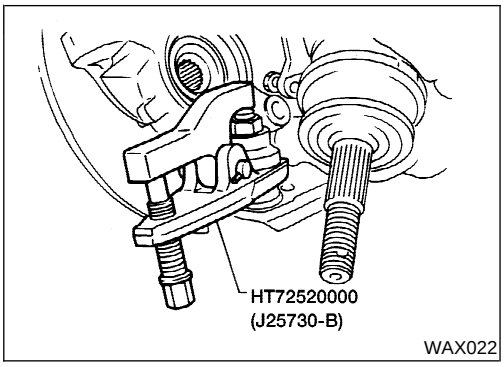

WAX022

6. Loosen lower ball joint tightening nut.
7. Separate knuckle from lower ball joint stud with tool.
8. Remove knuckle from transverse link.

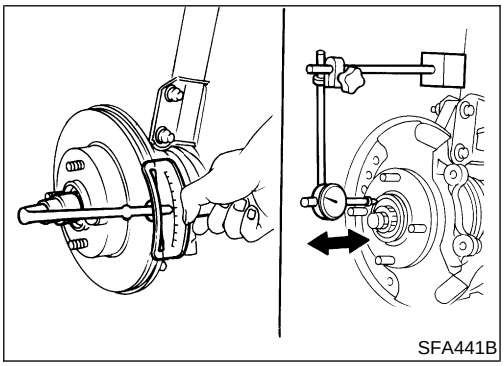
SFA441B

INSTALLATION

NDAX0010

1. Install knuckle with wheel hub.
- Replace strut lower mounting nuts.
- **When installing knuckle to strut, be sure to hold bolts and tighten nuts.**

  : 137 - 157 N·m (14.0 - 16.0 kg-m, 101 - 116 ft-lb)
2. Tighten tie-rod ball joint nut.

   : 29 - 39 N·m (3.0 - 4.0 kg-m, 22 - 29 ft-lb)
- **Apply oil to threaded portion of drive shaft and to both sides of plain washer.**
3. Tighten wheel bearing lock nut.

   : 235 - 314 N·m (24 - 32 kg-m, 174 - 231 ft-lb)
4. Check wheel bearing axial end play.

   Axial end play:

   0.05 mm (0.0020 in) or less

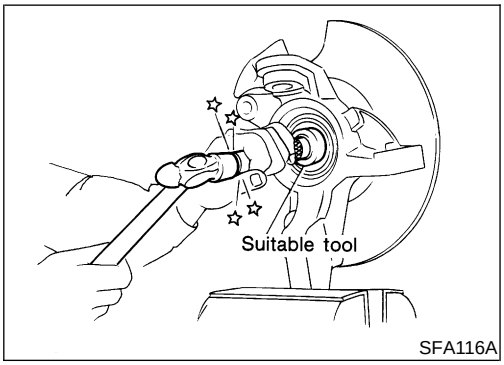

SFA116A

DISASSEMBLY

NDAX0011

CAUTION:

When removing wheel hub or wheel bearing from knuckle, replace wheel bearing assembly (outer race and inner race) with a new one.

Wheel bearing does not require maintenance. If any of the following symptoms are noted, replace wheel bearing assembly.

- Growling noise is emitted from wheel bearing during operation.
- Wheel bearing drags or turns roughly. This occurs when turning hub by hand after bearing lock nut is tightened to specified torque.

Wheel Hub

NDAX0011S01

Drive out wheel hub from knuckle with a suitable tool.

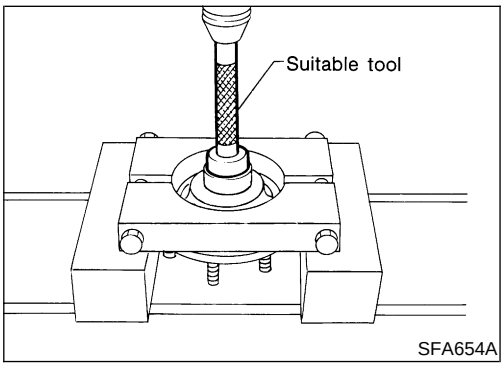

SFA654A

Wheel Bearing

NDAX0011S02

1. If wheel bearing inner race (outside) is removed together with wheel hub, press out wheel bearing inner race.

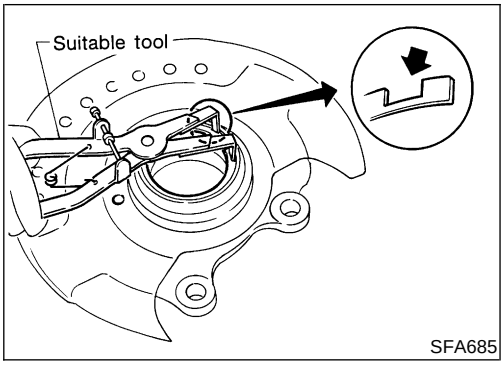

2. Remove snap ring.

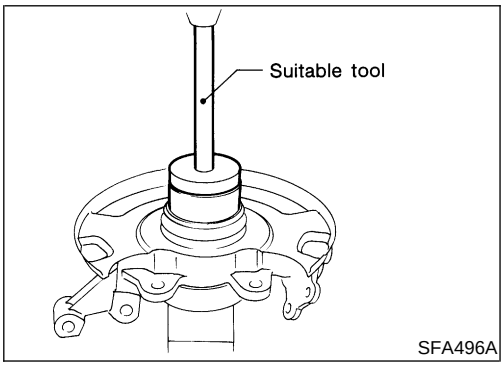

3. Press out bearing outer race.

INSPECTION

NDAX0012

Wheel Hub and Knuckle

NDAX0012S01

Check wheel hub and knuckle for cracks by using a magnetic exploration or dyeing test.

Snap Ring

NDAX0012S02

Check snap ring for wear and cracks. Replace if necessary.

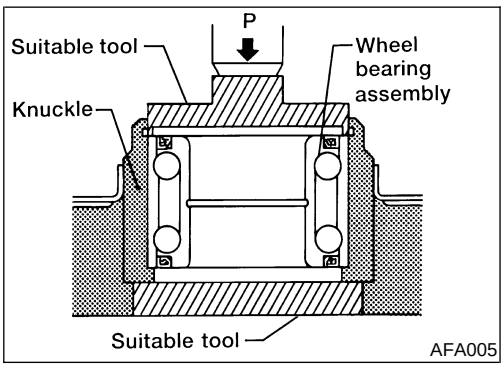

ASSEMBLY

NDAX0013

1. Press new wheel bearing assembly into knuckle.

   Maximum load P:

   29 kN (3 ton, 3.3 US ton, 3.0 Imp ton)

CAUTION:

- **Do not press on inner race of wheel bearing assembly.**
- **Do not apply oil or grease to mating surfaces of wheel bearing outer race and knuckle.**

2. Install snap ring into groove of knuckle.

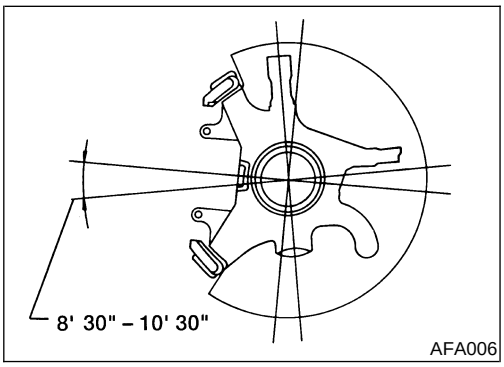

3. Install baffle plate and splash guard onto knuckle.

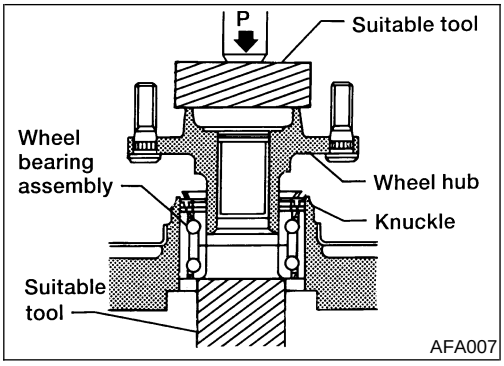

4. Press wheel hub into wheel bearing.

Maximum load P:

29 kN (3 ton, 3.3 US ton, 3.0 Imp ton)

- **Wheel bearing inner race must be held as shown.**

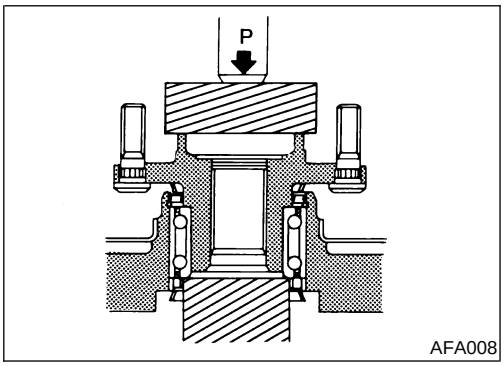

5. Check bearing operation.

a. Add load P with press.

Load P:

39.2 - 82.4 kN

(4.0 - 8.4 ton, 4.4 - 9.3 US ton, 3.94 - 8.27 Imp ton)

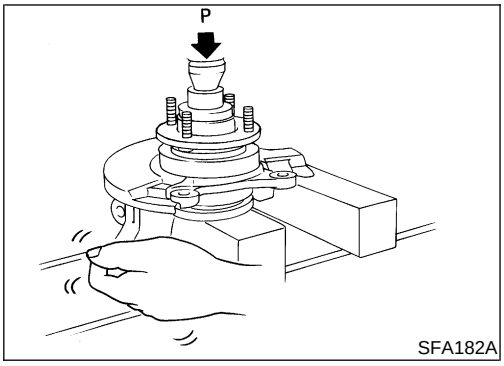

b. Spin knuckle several turns in both directions.

c. Make sure that wheel bearing operates smoothly.

Drive Shaft

COMPONENTS

NDAX0014

CAUTION:

- **Circular clips should be properly meshed with differential side gear (transaxle side) and with joint assembly (wheel side). Make sure they will not come out.**
- **Be careful not to damage boots. Use suitable protector or cloth during removal and installation.**

SEC. 391

Circular clip:
Make sure circular clip is properly meshed with side gear (transaxle side) and joint assembly (wheel side), and will not come out.

Be careful not to damage boots. Use suitable protector or cloth during removal and installation.

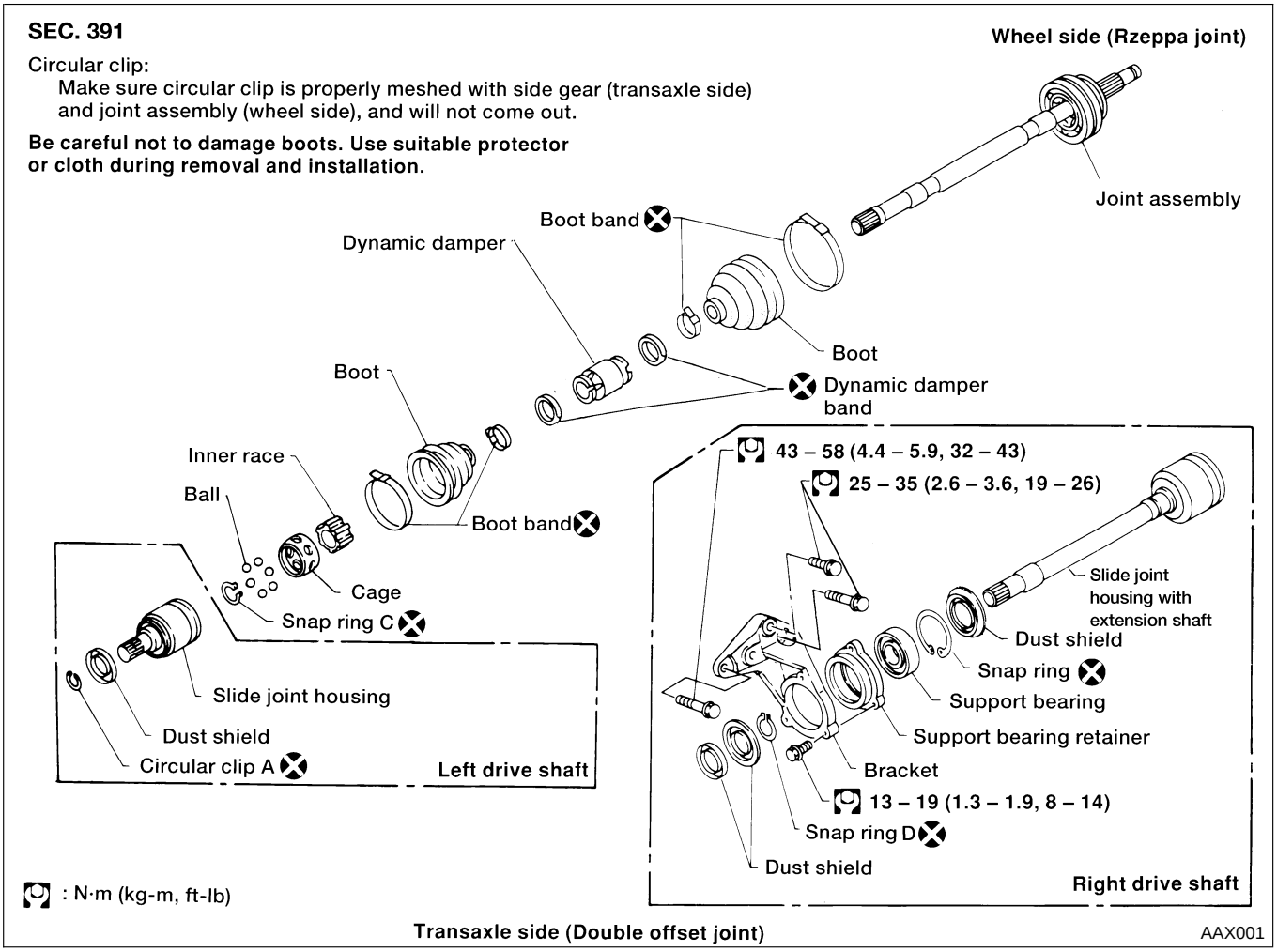

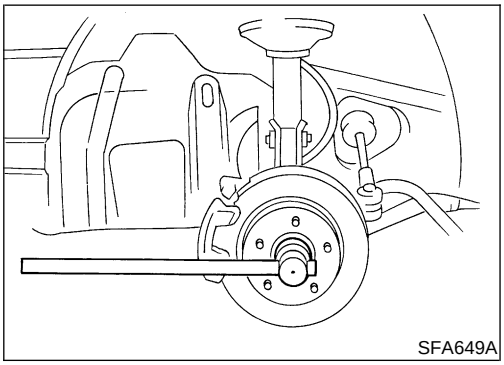

REMOVAL

NDAX0015

1. Remove wheel bearing lock nut.

- **Tie-rod does not need to be disconnected from knuckle.**
- **Suspend knuckle with wire so as not to stretch brake hose.**
- **Do not pull or twist brake hose.**

2. Remove clip and separate brake hose from strut.

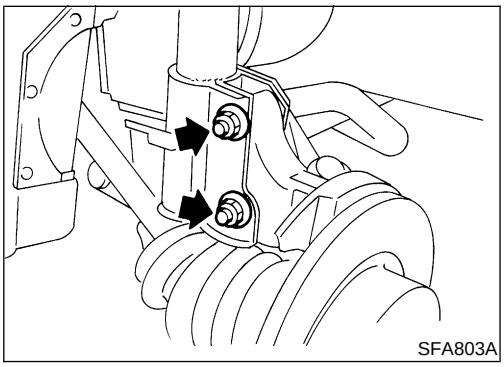

3. Remove strut lower mounting bolts.

- Remove brake hose clip.

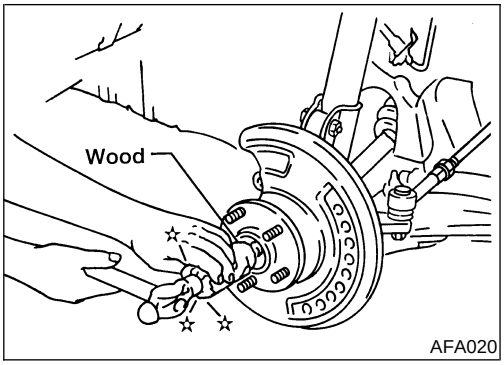

4. Separate drive shaft from knuckle by lightly tapping it. If it is hard to remove, use a puller.
- **When removing drive shaft, cover boots with a shop towel to prevent damage to them.**

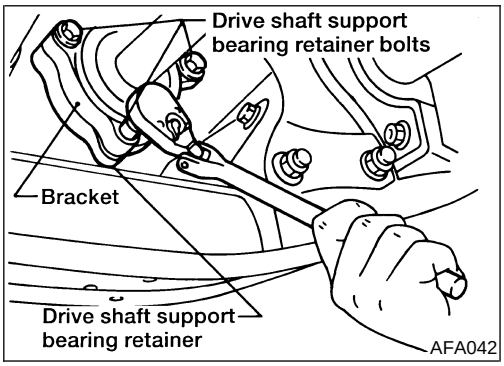

5. Remove right drive shaft from transaxle.
- Position drain pan beneath transaxle.
- Remove support bearing bolts and pull drive shaft from transaxle.

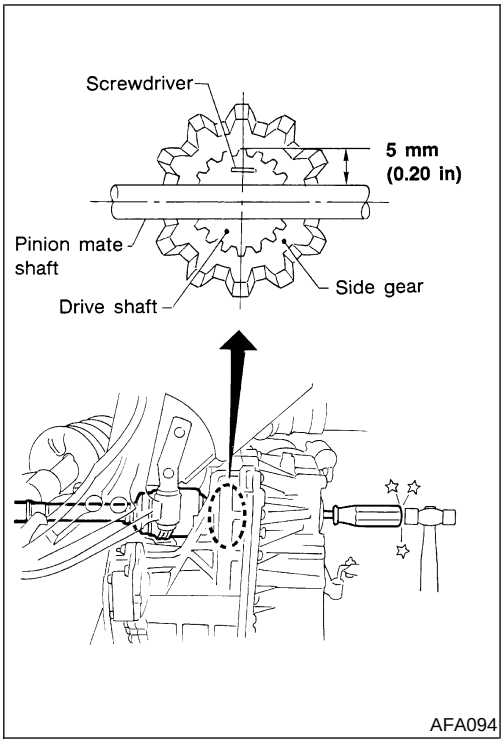

6. Remove left drive shaft from transaxle.
- Insert screwdriver into transaxle opening for right drive shaft and strike with a hammer.
- **Be careful not to damage pinion mate shaft and side gear.**

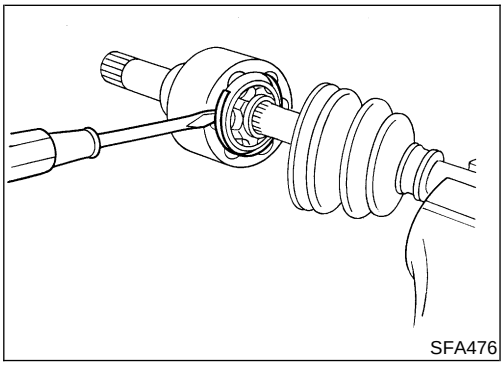

DISASSEMBLY

NDAX0016

Transaxle Side

NDAX0016S01

1. Remove boot bands.
2. Put matching marks on slide joint housing and inner race, before separating joint assembly.
3. Pry off snap ring "A" with a screwdriver, and pull out slide joint housing.

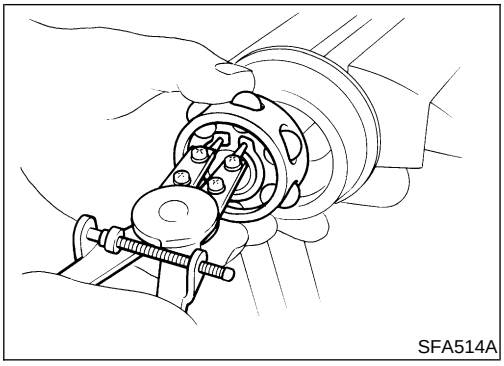
SFA514A

4. Put matching marks on inner race and drive shaft.
5. Remove snap ring "C", then remove ball cage, inner race and balls as a unit.
6. Draw out boot.

- **Cover drive shaft serrations with tape so as not to damage the boot.**

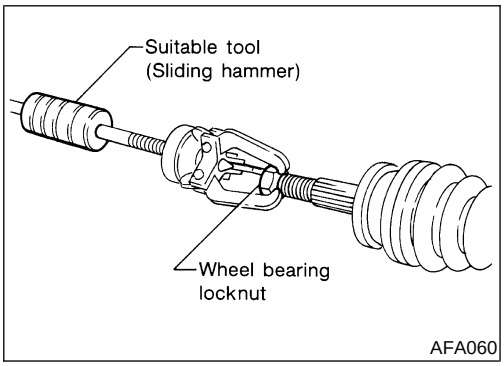

AFA060

Wheel Side

NDAX0016S02

CAUTION:

The joint on the wheel side cannot be disassembled.

1. Before separating joint assembly, put matching marks on drive shaft and joint assembly.
2. Separate joint assembly with a suitable tool.

- **Be careful not to damage threads on drive shaft.**

3. Remove boot bands.

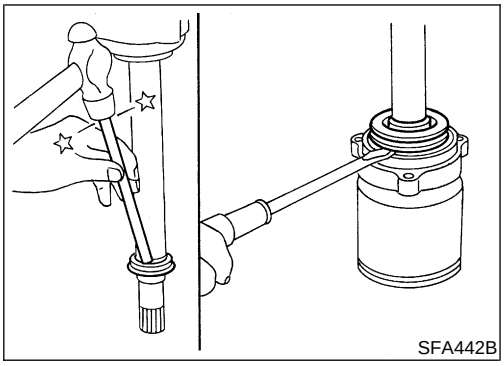
SFA442B

Support Bearing

NDAX0016S03

1. Remove dust shield.

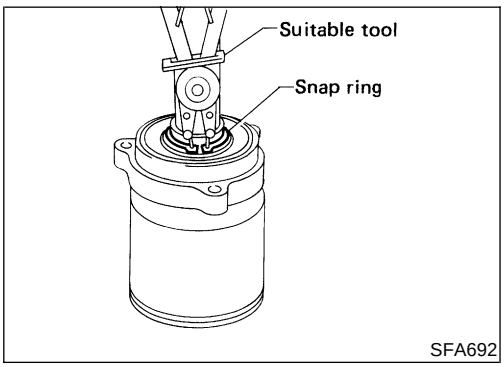

SFA692

2. Remove snap ring.

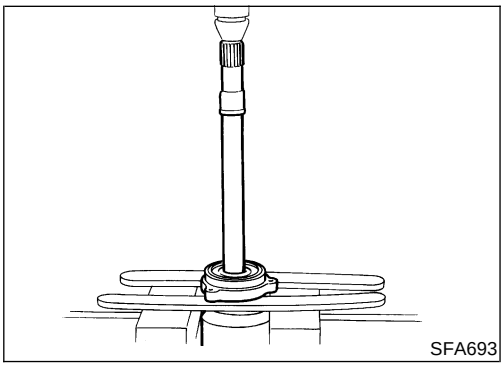
SFA693

3. Press support bearing assembly off drive shaft.

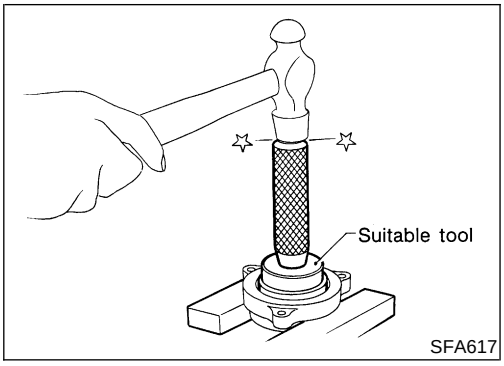

4. Remove dust shield.
5. Remove snap ring.
6. Separate support bearing from retainer.

INSPECTION

NDAX0017

Thoroughly clean all parts in cleaning solvent, and dry with compressed air. Check parts for evidence of deformation and other damage.

Drive Shaft

NDAX0017S01

Replace drive shaft if it is twisted or cracked.

Boot

NDAX0017S02

Check boot for fatigue, cracks, and wear. Replace boot with new boot bands.

Joint Assembly (Transaxle side)

NDAX0017S03

- Replace any parts of double offset joint which show signs of scorching, rust, wear or excessive play.
- Check serration for deformation. Replace if necessary.
- Check slide joint housing for any damage. Replace if necessary.

Joint Assembly (Wheel side)

NDAX0017S04

Replace joint assembly if it is deformed or damaged.

Support Bearing

NDAX0017S05

Make sure wheel bearing rolls freely and is free from noise, cracks, pitting and wear.

Support Bearing Bracket

NDAX0017S06

Check support bearing bracket for cracks with a magnetic exploration or dye test.

ASSEMBLY

NDAX0018

- **After drive shaft has been assembled, ensure that it moves smoothly over its entire range without binding.**
- **Use Genuine NISSAN grease or equivalent after every overhaul.**

Support Bearing

NDAX0018S01

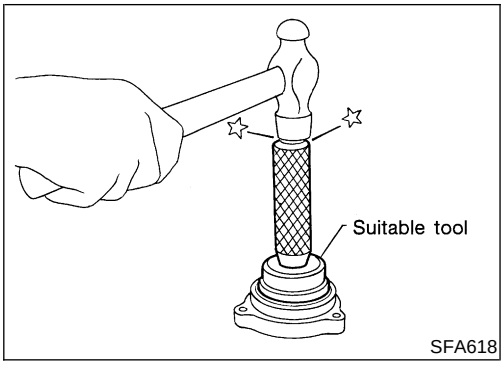

1. Install bearing into retainer.

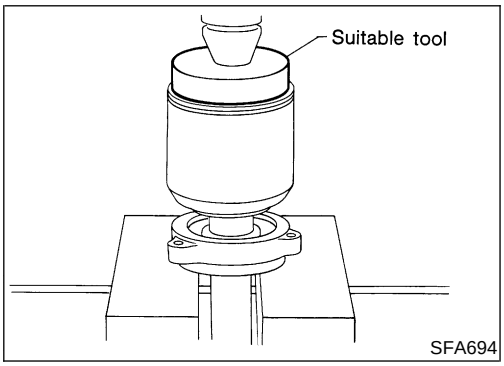

2. Install snap ring.
3. Install dust shield.
4. Press drive shaft into bearing.

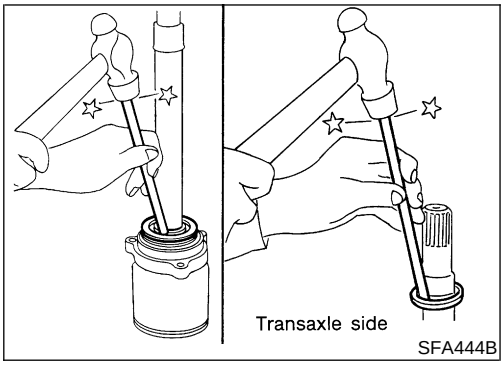

5. Install snap ring.
6. Install new dust shield.

Wheel Side

NDAX0018S02

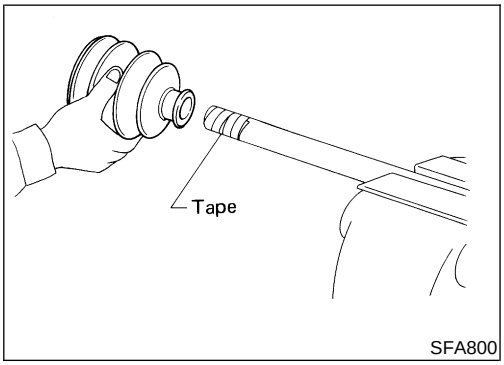

1. Install boot and new small boot band on drive shaft.

- **Cover drive shaft serration with tape so as not to damage boot during installation.**

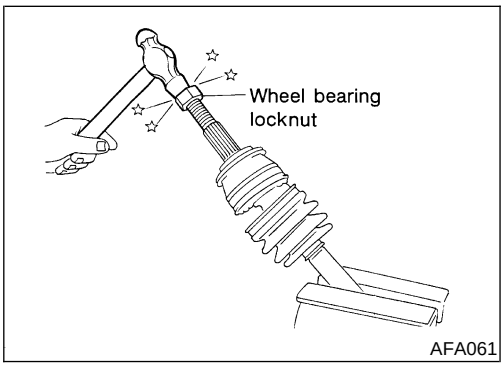

2. Set joint assembly onto drive shaft by lightly tapping it. Ensure that marks which were made during disassembly are properly aligned.

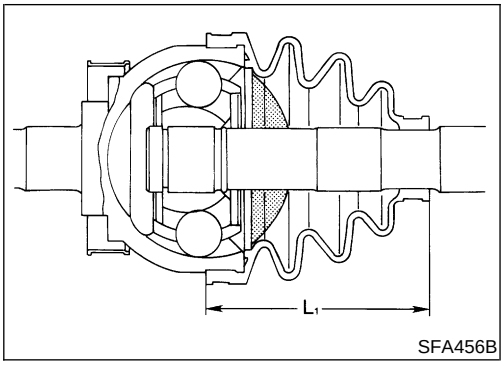

SFA456B

3. Pack drive shaft with specified amount of grease.

   Specified amount of grease:

   175 - 195 g (6.17 - 6.88 oz)

4. Make sure that boot is properly installed on the drive shaft groove.
   Set boot so that it does not swell and deform when its length is "L_1".

   Length "L_1":

   87.5 - 89.5 mm (3.445 - 3.524 in)

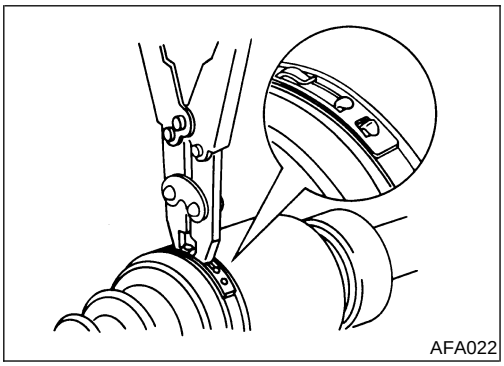
AFA022

5. Lock new larger and smaller boot bands securely with a suitable tool.

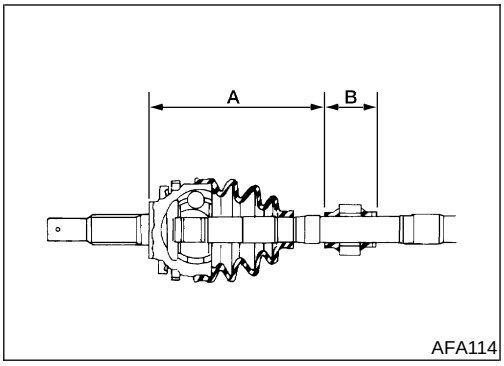

AFA114

Dynamic Damper

NDAX0018S03

1. Use a new damper band when reinstalling.
2. Install dynamic damper from stationary-joint side while holding it securely:

   Length:

   "A" 199 - 205 mm (7.83 - 8.07 in)

   "B" 70 mm (2.76 in)

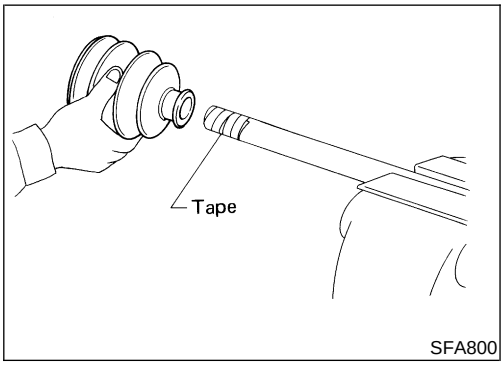

SFA800

Transaxle Side

NDAX0018S04

1. Install boot and new small boot band on drive shaft.

- **Cover drive shaft serration with tape to prevent damage to boot during installation.**

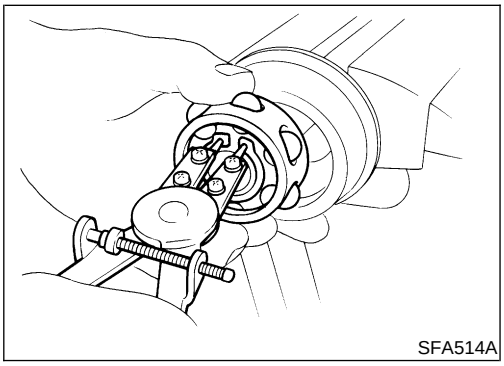
SFA514A

2. Install ball cage, inner race and balls as a unit, making sure that the matching marks which were made during disassembly are properly aligned.
3. Install new snap ring "C".

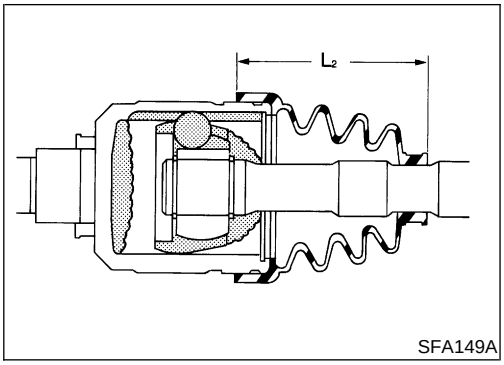

4. Pack drive shaft with specified amount of grease.

   Specified amount of grease:
   210 - 230 g (7.41 - 8.11 oz)
5. Install slide joint housing, then install new snap ring "A".
6. Make sure that boot is properly installed on the drive shaft groove.
   Set boot so that it does not swell and deform when its length is "L_2".

   Length "L_2":
   102.4 - 104.4 mm (4.03 - 4.11 in)

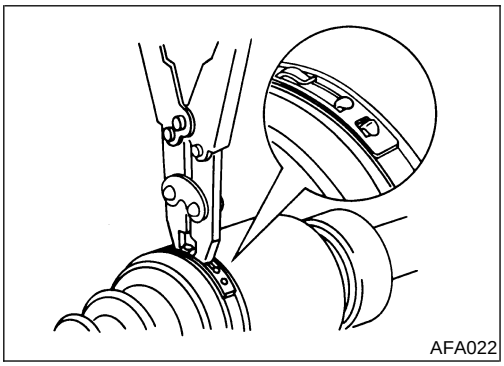

7. Lock new larger and smaller boot bands securely with a suitable tool.

INSTALLATION

NDAX0019

Transaxle Side

NDAX0019S01

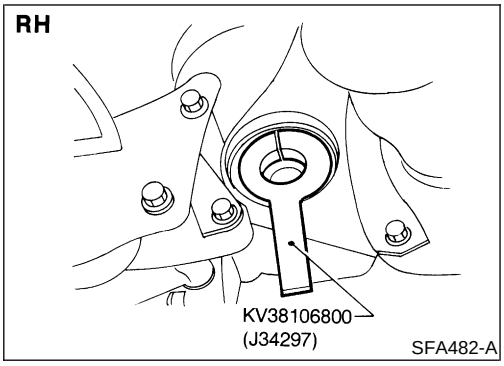

1. Drive a new oil seal to transaxle. Refer to ***AT-272***, "Differential Side Oil Seal Replacement".
2. Set Tool along the inner circumference of oil seal.

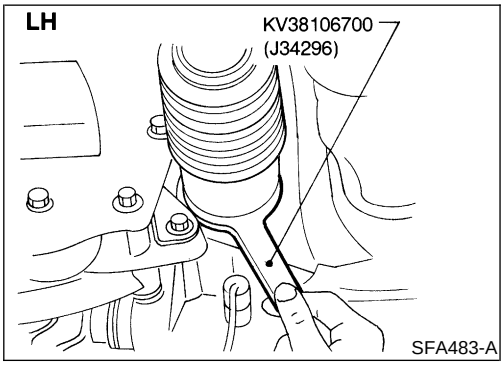

3. Insert drive shaft into transaxle. Be sure to properly align the serrations and then withdraw Tool.

- No circular clip is used on RH side.
- Use new circular clip on LH side.

4. Push drive shaft, then press-fit circular clip on the drive shaft into circular clip groove of side gear.
5. After its insertion, try to pull the slide joint out of the transaxle by hand. If it pulls out, the circular clip is not properly meshed with the side gear.

Wheel Side

NDAX0019S02

1. Install drive shaft into knuckle.
2. Tighten wheel bearing lock nut. Refer to "INSTALLATION", AX-7.

Service Data and Specifications (SDS)

WHEEL BEARING (FRONT)

NDAX0020

Wheel bearing axial end play	0.05 mm (0.0020 in) or less
Wheel bearing lock nut tightening torque	235 - 314 N·m (24 - 32 kg-m, 174 - 231 ft-lb)

DRIVE SHAFT

NDAX0021

Applied model			All
Joint type	Transaxle side		DOJ
	Wheel side		Rzeppa
Grease			Nissan genuine grease or equivalent
Capacity		Transaxle side	210 - 230 g (7.41 - 8.11 oz)
		Wheel side	175 - 195 g (6.17 - 6.88 oz)
Boot length	Transaxle side “L_2”		102.4 - 104.4 mm (4.03 - 4.11 in)
	Wheel side “L_1”		87.5 - 89.5 mm (3.445 - 3.524 in)

Transaxle side

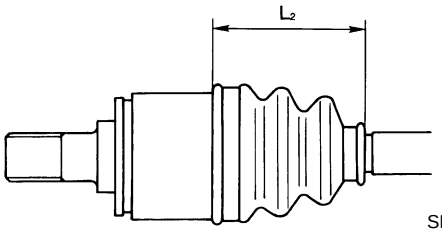

SFA961A

Wheel side

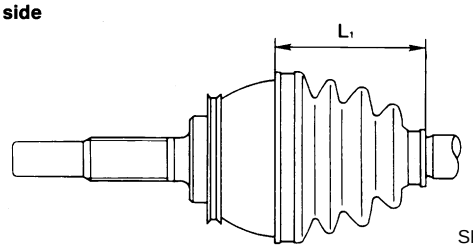

SFA962A

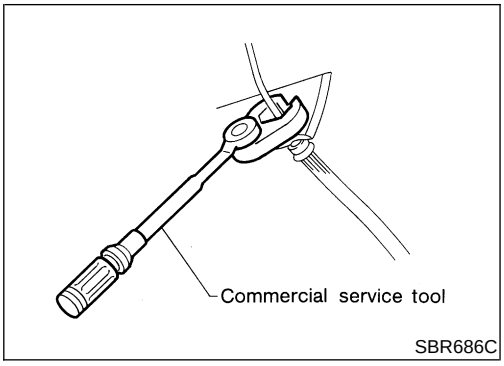

SBR686C

Precautions

PRECAUTIONS

NDAX0022

- **When installing rubber parts, final tightening must be carried out under unladen condition* with tires on ground.**
  ***:Fuel, radiator coolant and engine oil full. Spare tire, jack, hand tools and mats in designated positions.**
- **Use flare nut wrench when removing or installing brake tubes.**
- **When installing suspension components, check wheel alignment and adjust if necessary.**
- **Always torque brake lines when installing.**

Preparation

COMMERCIAL SERVICE TOOL

NDAX0023

Tool name	Description	
1 Flare nut crowfoot 2 Torque wrench	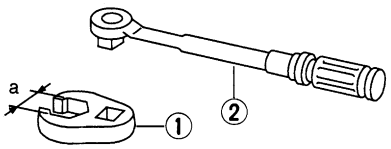 NT360	Removing and installing brake piping **a: 10 mm (0.39 in)**

Noise, Vibration and Harshness (NVH) Troubleshooting

NDAX0024

Refer to “NVH TROUBLESHOOTING CHART”, AX-3.

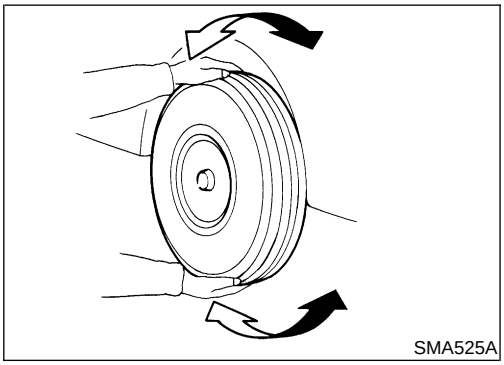
SMA525A

On-vehicle Service

REAR AXLE PARTS

NDAX0025

Check axle and suspension parts for excessive play, wear or damage.

- Shake each rear wheel to check for excessive play.
- Make sure that all cotter pins are inserted.
- Retighten all nuts and bolts to the specified torque.

  Tightening torque:

  Refer to *SU-16*,“Components”.

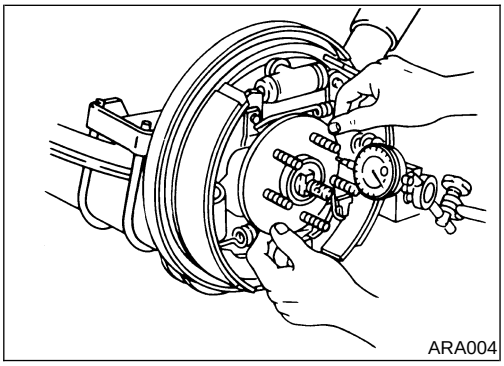
ARA004

REAR WHEEL HUB BEARING

NDAX0026

- Check axial end play.

  Axial end play:

  0.05 mm (0.0020 in) or less
- Check that wheel hub bearing operates smoothly.
- Check tightening torque of wheel bearing lock nut.

  : 216 - 284 N·m (22 - 29 kg-m, 159 - 210 ft-lb)
- If axial end play is not within specification, or wheel hub bearing does not turn smoothly, replace wheel hub bearing. Refer to “REMOVAL”, AX-19.

Wheel Hub

COMPONENTS

NDAX0027

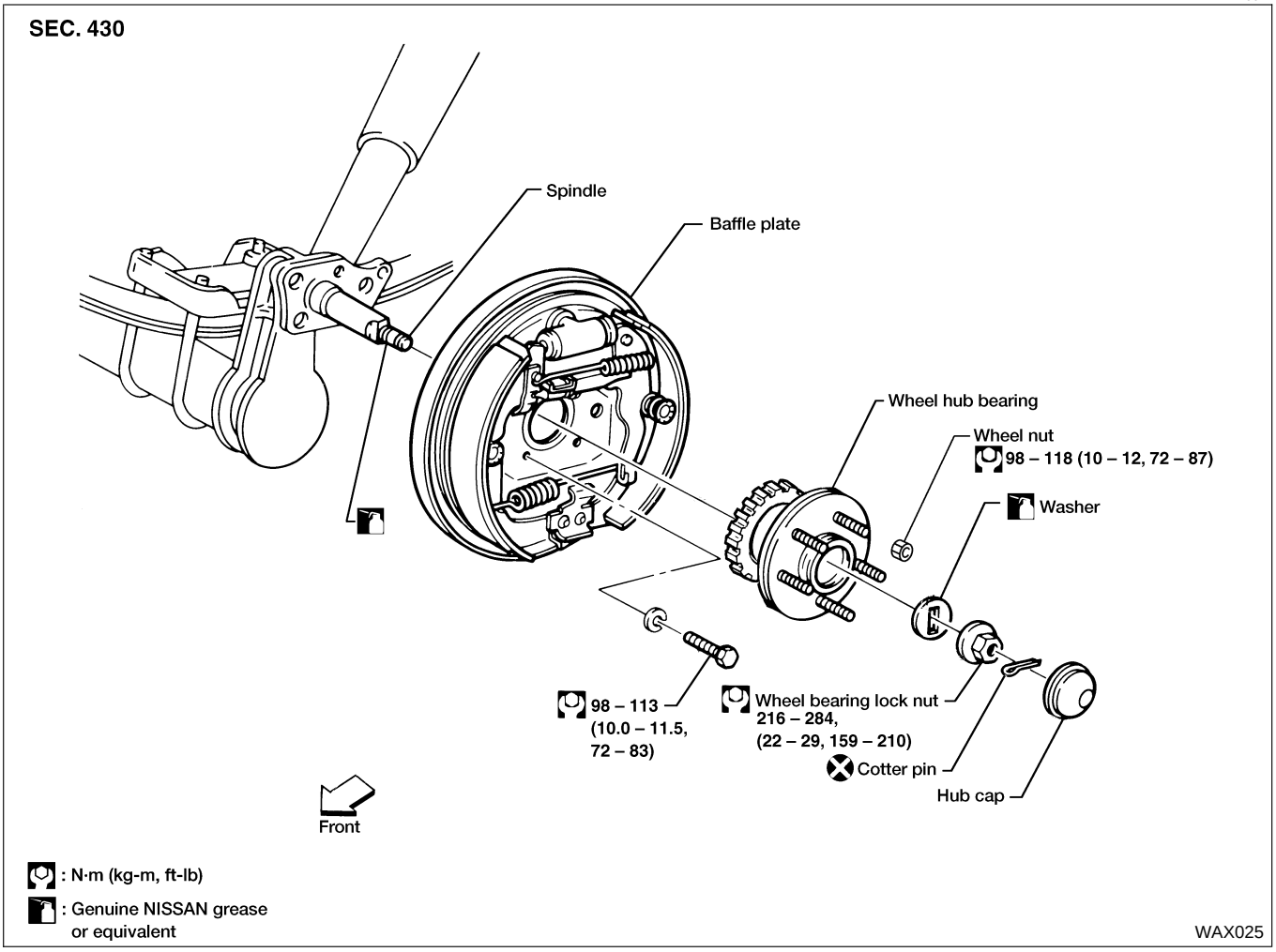

REMOVAL

NDAX0028

CAUTION:

- **Before removing the wheel hub bearing, disconnect the ABS wheel sensor from the assembly. Then move it away from the hub. Failure to do so may result in damage to the sensor wires and the sensor becoming inoperative.**
- **Wheel hub bearing does not require maintenance. If any of the following occurs, replace wheel hub bearing.**

1) Growling noise is emitted from wheel hub bearing during operation.
2) Wheel hub bearing drags or turns roughly. This occurs when turning hub by hand after bearing lock nut is tightened to specified torque.
3) Rear sensor rotor is damaged.

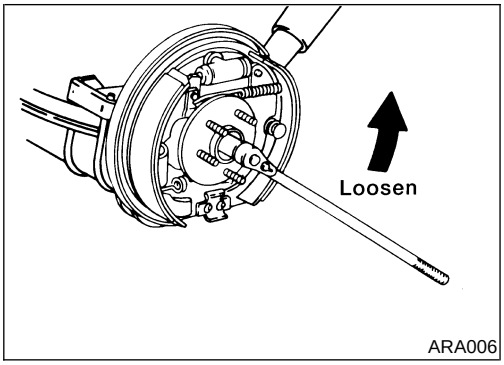

1. Remove brake drum.
2. Remove wheel bearing lock nut.
3. Remove wheel hub bearing assembly.

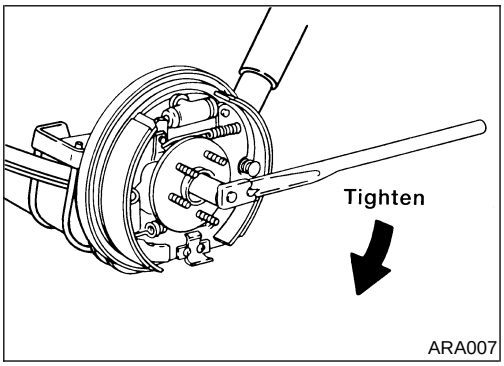

INSTALLATION

NDAX0029

1. Install wheel hub bearing assembly.
2. Tighten wheel bearing lock nut.
   Before tightening, apply oil to threaded portion of rear spindle and both sides of plain washer.
   : 216 - 284 N·m (22 - 29 kg-m, 159 - 210 ft-lb)
3. Check that wheel bearing operates smoothly.

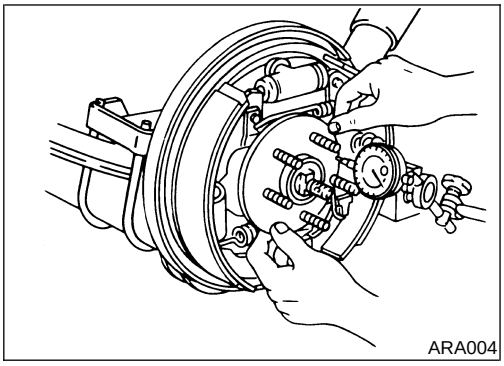

4. Check wheel hub bearing axial end play.
   Axial end play:
   0.05 mm (0.0020 in) or less

Service Data and Specifications (SDS)

WHEEL BEARING (REAR)

NDAX0030

Wheel bearing axial end play	0.05 mm (0.0020 in) or less
Wheel bearing lock nut tightening torque	216 - 284 N·m (22 - 29 kg-m, 159 - 210 ft-lb)