Edition: August 2008
Revision:October 2008
Publication No. SM9E-1V42U0

NISSAN QUEST

MODEL V42 SERIES

QUICK REFERENCE INDEX

FOREWORD

This manual contains maintenance and repair procedures for the 2009 NISSAN QUEST.

In order to assure your safety and the efficient functioning of the vehicle, this manual should be read thoroughly. It is especially important that the PRECAUTIONS in the GI section be completely understood before starting any repair task.

All information in this manual is based on the latest product information at the time of publication. The right is reserved to make changes in specifications and methods at any time without notice.

IMPORTANT SAFETY NOTICE

The proper performance of service is essential for both the safety of the technician and the efficient functioning of the vehicle.
The service methods in this Service Manual are described in such a manner that the service may be performed safely and accurately.
Service varies with the procedures used, the skills of the technician and the tools and parts available. Accordingly, anyone using service procedures, tools or parts which are not specifically recommended by NISSAN must first be completely satisfied that neither personal safety nor the vehicle's safety will be jeopardized by the service method selected.

NISSAN NORTH AMERICA, INC.
Technical Publications Department

PLEASE HELP MAKE THIS SERVICE MANUAL BETTER!

Your comments are important to NISSAN and will help us to improve our Service Manuals.

Use this form to report any issues or comments you may have regarding our Service Manuals.

Please print this form and type or write your comments below. Mail or fax to:

Nissan North America, Inc.
Technical Service Information
39001 Sunrise Drive, P.O. Box 9200
Farmington Hills, MI USA 48331
FAX: (248) 488-3910

SERVICE MANUAL: Model: _____ **Year:** _____

PUBLICATION NO. (Refer to Quick Reference Index): _____

Please describe any Service Manual issues or problems in detail:

Page number(s) _____ *Note: Please include a copy of each page, marked with your comments.*

_____

_____

_____

_____

_____

_____

_____

Are the trouble diagnosis procedures logical and easy to use? (circle your answer) YES NO

If no, what page number(s)?_____*Note: Please include a copy of each page, marked with your comments.*

Please describe the issue or problem in detail: _____

_____

_____

_____

Is the organization of the manual clear and easy to follow? (circle your answer) YES NO

Please comment: _____

_____

_____

_____

_____

What information should be included in NISSAN Service Manuals to better support you in servicing or repairing customer vehicles?

_____

_____

_____

_____

DATE: _____ YOUR NAME: _____ POSITION: _____

DEALER: _____ DEALER NO.: _____ ADDRESS: _____

CITY:_____ STATE/PROV./COUNTRY: _____ ZIP/POSTAL CODE: _____

QUICK REFERENCE CHART: QUEST

Engine Tune-up Data

INFOID:0000000003332592

GENERAL SPECIFICATIONS

Cylinder arrangement		V-6
Displacement cm^3 (cu in)		3,498 (213.45)
Bore and stroke mm (in)		95.5 x 81.4 (3.760 x 3.205)
Valve arrangement		DOHC
Firing order		1-2-3-4-5-6
Number of piston rings	Compression	2
	Oil	1
Number of main bearings		4
Compression ratio		10.0:1
Compression pressure kPa (kg/cm^2, psi)/300 rpm	Standard	1,275 (13.0, 185)
	Minimum	981 (10.0, 142)
	Differential limit between cylinders	98 (1.0, 14)
Cylinder number	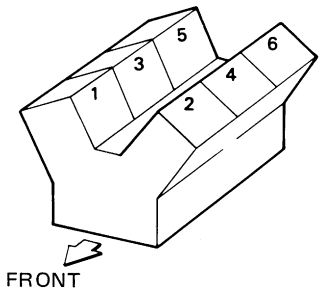 SEM713A	
Valve timing (IVTC - OFF)	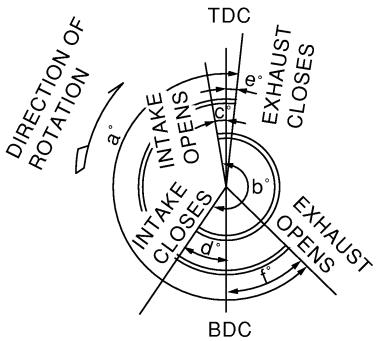 PBIC0187E	

Unit: degree

a	b	c	d	e	f
240°	238°	- 6°	64°	8°	52°

SPARK PLUG

Make	NGK
Standard type	PLFR5A-11
Hot type	PLFR4A-11
Cold type	PLFR6A-11
Gap (nominal)	1.1 mm (0.043 in)

Front Wheel Alignment (Unladen*1)

INFOID:0000000003332591

Market		United States and Canada	Mexico
Camber degree minute (decimal degree)	Minimum	–1° 15′ (–1.25°)	–0° 4′ (–0.07°)
	Nominal	–0° 30′ (–0.50°)	–0° 4′ (–0.07°)
	Maximum	0° 15′ (0.25°)	0° 41′ (0.68°)
	Left and right difference	0° 45′ (0.75°) or less	0° 45′ (0.75°) or less
Caster degree minute (decimal degree)	Minimum	1° 57′ (1.95°)	2° 27′ (2.45°)
	Nominal	2° 42′ (2.70°)	2° 27′ (2.45°)
	Maximum	3° 27′ (3.45°)	3° 12′ (3.20°)
	Left and right difference	0° 45′ (0.75°) or less	0° 45′ (0.75°) or less
Kingpin inclination degree minute (decimal degree)	Minimum	13° 39′ (13.65°)	13° 42′ (13.70°)
	Nominal	14° 24′ (14.40°)	13° 42′ (13.70°)
	Maximum	15° 09′ (15.15°)	14° 27′ (14.45°)

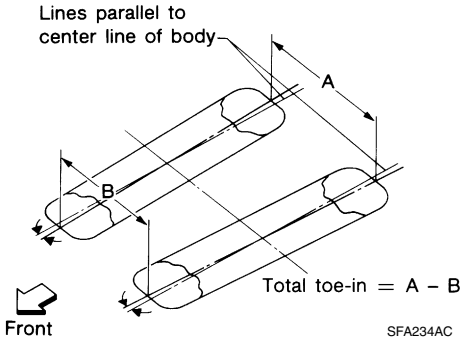

Total toe-in	Distance (A – B) mm (in)	Minimum	–0.75 (–0.0295)	–0.75 (–0.0295)
		Nominal	0.25 (0.0098)	0.25 (0.0098)
		Maximum	1.25 (0.0492)	1.25 (0.0492)
	Angle (left plus right) degree minute (decimal degree)	Minimum	-0° 1′ 54″ (-0.03°)	-0° 1′ 54″ (-0.03°)
		Nominal	0° 0′ 36″ (0.01°)	0° 0′ 36″ (0.01°)
		Maximum	0° 3′ 6″ (0.05°)	0° 3′ 6″ (0.05°)
Wheel turning angle full turn*2	Inside degree minute (decimal degree)	Minimum	35° 15′ (35.25°)	38° 00′ (38.00°)
		Nominal	38° 45′ (38.75°)	41° 30′ (41.50°)
		Maximum	39° 45′ (39.75°)	42° 30′ (42.50°)
	Outside degree minute (decimal degree)	Nominal	32° 30′ (32.5°)	33° 24′ (33.4°)

*1: Fuel, engine coolant and engine oil full. Spare tire, jack, hand tools and mats in designated positions.

*2: On power steering models, wheel turning force (at circumference of steering wheel) of 98 to 147 N (10 to 15 kg-f, 22 to 33 lb-f) with engine idle.

Rear Wheel Alignment (Unladen*)

INFOID:0000000003332589

Market		United States and Canada	Mexico
Camber Degree minute (Decimal degree)	Minimum	–1° 3' (–1.05°)	0° 3' (0.05°)
	Nominal	–0° 33′ (–0.55°)	0° 33′ (0.55°)
	Maximum	-0° 3′ (-0.05°)	1° 3′ (1.05°)

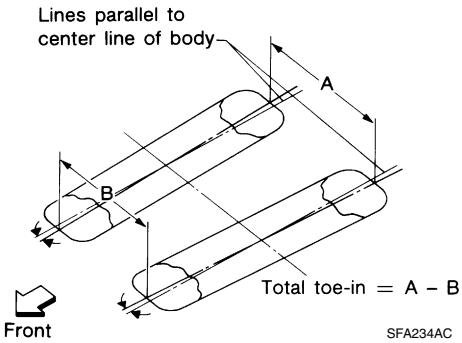

Total toe-in	Distance (“A” – “B”) mm (in)		Minimum	1.6 (0.063)	1.6 (0.063)
			Nominal	3.2 (0.126)	3.2 (0.126)
			Maximum	4.8 (0.189)	4.8 (0.189)
		Difference between LH, RH	Minimum	-2.0 (-0.079)	-2.0 (-0.079)
			Nominal	0 (0)	0 (0)
			Maximum	2.0 (0.079)	2.0 (0.079)
	Angle (left plus right) Degree minute (Decimal degree)		Minimum	0° 3′ 35" (0.06°)	0° 3′ 35" (0.06°)
			Nominal	0° 7′ 48" (0.13°)	0° 7′ 48" (0.13°)
			Maximum	0° 12′ 0" (0.20°)	0° 12′ 0" (0.20°)

*: Fuel, engine coolant, and engine oil are full. Spare tire, jack, hand tools and mats in designated positions.

Wheelarch Height (Unladen*)

INFOID:0000000003332590

Unit: mm (in)

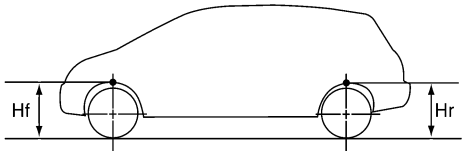

WEIA0030E

Market	United States and Canada	Mexico
Front (Hf)	740 (29.13)	770 (30.31)
Rear (Hr)	749 (29.49)	779 (30.67)

*: Fuel, engine coolant, and engine oil are full. Spare tire, jack, hand tools and mats in designated positions.

Brake Specification

INFOID:0000000003332586

Unit: mm (in)

Front brake	Brake model		AD35VB disc brake
	Cylinder bore diameter		47.62 (1.87)
	Pad Length × width × thickness		132.0 × 53.5 × 10 (5.20 × 2.11 × 0.39)
	Rotor outer diameter × thickness		290 × 28 (11.42 × 1.10)
Rear brake	Brake model		AD14VE disc brake
	Cylinder bore diameter		42.86 (1.69)
	Pad Length × width × thickness		83.0 × 33.0 × 8.5 (3.27 × 1.30 × 0.33)
	Rotor outer diameter × thickness		308 × 16 (12.13 × 0.63)
Master cylinder	Cylinder bore diameter		25.4 (1.00)
Brake booster	Booster model		M245T
	Diaphragm diameter	Primary	252 (9.92)
		Secondary	230 (9.06)
Recommended brake fluid			Genuine NISSAN Super Heavy Duty Brake Fluid or equivalent, DOT 3 (US FMVSS No. 116)

Disc Brake

INFOID:0000000003332587

Unit: mm (in)

Brake model		AD35VB (Front)	AD14VE (Rear)
Pad wear limit	Minimum thickness	2.0 (0.079)	2.0 (0.079)
Rotor repair limit	Maximum runout	0.04 (0.0016)	0.05 (0.0020)
	Minimum thickness	26.0 (1.02)	14.0 (0.55)
	Maximum thickness variation (measured at 8 positions)	0.015 (0.0006) or less	

Brake Pedal

INFOID:0000000003332588

Unit: mm (in)

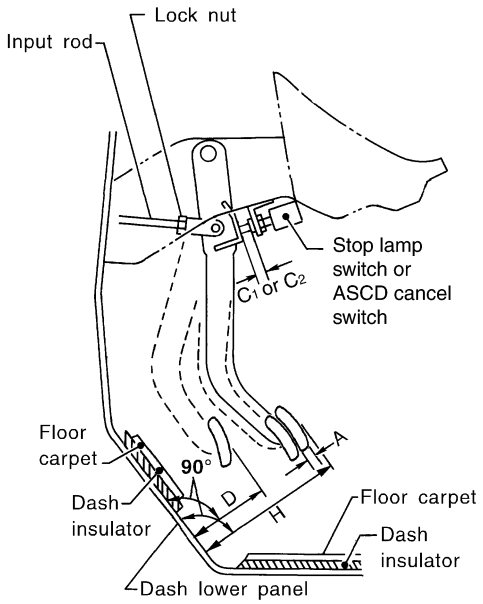

WFIA0160E

Free height “H” *	156.3 - 166.3 (6.15 - 6.55)
Depressed pedal height “D” [under a force of 490 N (50 kg, 110 lb) with engine running] *	more than 90.3 (3.55)
Clearance “C^1” or “C^2” between pedal stopper and threaded end of stop lamp switch or ASCD switch	0.74 - 1.96 (0.029 - 0.077)
Pedal play “A”	3 - 11 (0.12 - 0.43)

*: Measured from surface of dash reinforcement panel to surface of pedal pad

Fluids and Lubricants

INFOID:0000000003332585

Description		Capacity (Approximate)		
		Metric	US measure	Imp measure
Fuel		75.6 ℓ	20 gal	16 5/8 gal
Engine oil Drain and refill	With oil filter change	4.0 ℓ	4 1/4 qt	3 1/2 qt
	Without oil filter change	3.7 ℓ	3 7/8 qt	3 1/4 qt
Dry engine (engine overhaul)		5.0 ℓ	5 1/4 qt	4 3/8 qt
Cooling system	With reservoir at “MAX” level	10.5 ℓ	2 3/4 gal	2 3/8 gal
Automatic transaxle fluid (ATF)		7.4 ℓ	7 7/8 qt	6 1/2 qt
Power steering fluid (PSF)		1.0 ℓ	2 1/8 pt	1 3/4 pt
Brake fluid		—	—	—
Multi-purpose grease		—	—	—
Brake grease		—	—	—
Windshield washer fluid		4.5 ℓ	1 1/4 gal	1 gal
Air conditioning system refrigerant		900 ± 50 g	1.98 ± 0.11 lb	1.98 ± 0.11 lb
Air conditioning system oil		220 mℓ	7.44 fl oz	7.7 fl oz