SECTION SEC
SECURITY CONTROL SYSTEM

CONTENTS

WITH INTELLIGENT KEY SYSTEM

PRECAUTION 4

PRECAUTIONS 4
- Precaution for Supplemental Restraint System (SRS) "AIR BAG" and "SEAT BELT PRE-TENSIONER" 4
- Precaution for Procedure without Cowl Top Cover 4
- Precautions For Xenon Headlamp Service 4
- Precautions for Removing Battery Terminal 5

SYSTEM DESCRIPTION 6

COMPONENT PARTS 6
- Component Parts Location 6
- CVT Shift Selector (Detention Switch) 8
- NATS Antenna Amp. 9

SYSTEM 10

INTELLIGENT KEY SYSTEM/ENGINE START FUNCTION 10
- INTELLIGENT KEY SYSTEM/ENGINE START FUNCTION : System Description 10
- INTELLIGENT KEY SYSTEM/ENGINE START FUNCTION : Circuit Diagram 13

NISSAN VEHICLE IMMOBILIZER SYSTEM-NATS 14
- NISSAN VEHICLE IMMOBILIZER SYSTEM-NATS : System Description 15
- NISSAN VEHICLE IMMOBILIZER SYSTEM-NATS : Circuit Diagram 18

VEHICLE SECURITY SYSTEM 19
- VEHICLE SECURITY SYSTEM : System Diagram 20
- VEHICLE SECURITY SYSTEM : Circuit Diagram 24

DIAGNOSIS SYSTEM (BCM) 28

COMMON ITEM 28
- COMMON ITEM : CONSULT Function (BCM - COMMON ITEM) 28

INTELLIGENT KEY 29
- INTELLIGENT KEY : CONSULT Function (BCM - INTELLIGENT KEY) 30

THEFT ALM 33
- THEFT ALM : CONSULT Function (BCM - THEFT) 33

IMMU 34
- IMMU : CONSULT Function (BCM - IMMU) 34

DIAGNOSIS SYSTEM (IPDM E/R) 36
- CONSULT Function (IPDM E/R) 36

ECU DIAGNOSIS INFORMATION 38

ECM, IPDM E/R, BCM 38
- List of ECU Reference 38

WIRING DIAGRAM 39

SECURITY CONTROL SYSTEM 39
- Wiring Diagram 39

BASIC INSPECTION 57

DIAGNOSIS AND REPAIR WORK FLOW 57
- Work Flow 57

ADDITIONAL SERVICE WHEN REPLACING CONTROL UNIT 60

ECM 60
- ECM : Description 60
- ECM : Work Procedure 60

BCM 60
- BCM : Description 60
- BCM : Work Procedure 60

DTC/CIRCUIT DIAGNOSIS 62

P1610 LOCK MODE 62
Description 62
DTC Logic 62
Diagnosis Procedure 62

P1611 ID DISCORD, IMMU-ECM 63
DTC Logic 63
Diagnosis Procedure 63

P1612 CHAIN OF ECM-IMMU 64
DTC Logic 64
Diagnosis Procedure 64

B2192 ID DISCORD, IMMU-ECM 65
DTC Logic 65
Diagnosis Procedure 65

B2193 CHAIN OF ECM-IMMU 66
DTC Logic 66
Diagnosis Procedure 66

B2195 ANTI-SCANNING 67
DTC Logic 67
Diagnosis Procedure 67

B2196 DONGLE UNIT 68
Description 68
DTC Logic 68
Diagnosis Procedure 68

B2198 NATS ANTENNA AMP. 70
DTC Logic 70
Diagnosis Procedure 70

B2555 STOP LAMP 73
DTC Logic 73
Diagnosis Procedure 73
Component Inspection 74

B2556 PUSH-BUTTON IGNITION SWITCH 76
DTC Logic 76
Diagnosis Procedure 76
Component Inspection 77

B2557 VEHICLE SPEED 78
DTC Logic 78
Diagnosis Procedure 78

B2601 SHIFT POSITION 79
DTC Logic 79
Diagnosis Procedure 79

B2602 SHIFT POSITION 81
DTC Logic 81
Diagnosis Procedure 81
Component Inspection 83

B2603 SHIFT POSITION 84
DTC Logic 84
Diagnosis Procedure 84
Component Inspection (Transmission Range Switch) 87
Component Inspection [CVT Shift Selector (Detention Switch)] 87

B2604 SHIFT POSITION 89
DTC Logic 89
Diagnosis Procedure 89
Component Inspection (Transmission Range Switch) 91

B2605 SHIFT POSITION 92
DTC Logic 92
Diagnosis Procedure 92

B2608 STARTER RELAY 95
DTC Logic 95
Diagnosis Procedure 95

B260F ENGINE STATUS 97
Description 97
DTC Logic 97
Diagnosis Procedure 97

B261A PUSH-BUTTON IGNITION SWITCH 98
DTC Logic 98
Diagnosis Procedure 98

B26F3 STARTER CONTROL RELAY 100
DTC Logic 100
Diagnosis Procedure 100

B26F4 STARTER CONTROL RELAY 101
DTC Logic 101
Diagnosis Procedure 101

B26F7 BCM 102
DTC Logic 102
Diagnosis Procedure 102

B26F8 BCM 103
DTC Logic 103
Diagnosis Procedure 103

B26F9 CRANKING REQUEST CIRCUIT 104
DTC Logic 104
Diagnosis Procedure 104

B26FA CRANKING REQUEST CIRCUIT 106
DTC Logic 106
Diagnosis Procedure 106

B26FC KEY REGISTRATION 108
DTC Logic 108
Diagnosis Procedure 108

B209F CRANKING REQUEST CIRCUIT 109
DTC Logic 109
Diagnosis Procedure 109

B20A0 CRANKING REQUEST CIRCUIT 111
DTC Logic 111
Diagnosis Procedure 111

B210B STARTER CONTROL RELAY 113
DTC Logic 113
Diagnosis Procedure 113

B210C STARTER CONTROL RELAY 114
DTC Logic 114
Diagnosis Procedure 114

B210D STARTER RELAY 116
DTC Logic 116
Diagnosis Procedure 116

B210E STARTER RELAY 118
DTC Logic 118
Diagnosis Procedure 118

B210F SHIFT POSITION/CLUTCH INTERLOCK SWITCH 120
DTC Logic 120
Diagnosis Procedure 120

B2110 SHIFT POSITION/CLUTCH INTERLOCK SWITCH 122
DTC Logic 122
Diagnosis Procedure 122

HEADLAMP FUNCTION 124
Component Function Check 124
Diagnosis Procedure 124

HORN FUNCTION 125
Component Function Check 125
Diagnosis Procedure 125

SECURITY INDICATOR LAMP 126
Component Function Check 126
Diagnosis Procedure 126

SYMPTOM DIAGNOSIS 128

ENGINE DOES NOT START WHEN INTELLIGENT KEY IS INSIDE OF VEHICLE 128
Description 128
Diagnosis Procedure 128

SECURITY INDICATOR LAMP DOES NOT TURN ON OR BLINK 129
Description 129
Diagnosis Procedure 129

VEHICLE SECURITY SYSTEM CANNOT BE SET 130

INTELLIGENT KEY 130
INTELLIGENT KEY : Description 130
INTELLIGENT KEY : Diagnosis Procedure 130

DOOR REQUEST SWITCH 130
DOOR REQUEST SWITCH : Description 130
DOOR REQUEST SWITCH : Diagnosis Procedure 130

DOOR KEY CYLINDER 131
DOOR KEY CYLINDER : Description 131
DOOR KEY CYLINDER : Diagnosis Procedure 131

DOOR LOCK AND UNLOCK SWITCH 131
DOOR LOCK AND UNLOCK SWITCH : Description 131
DOOR LOCK AND UNLOCK SWITCH : Diagnosis Procedure 131

VEHICLE SECURITY ALARM DOES NOT ACTIVATE 132
Description 132
Diagnosis Procedure 132

REMOVAL AND INSTALLATION 133

NATS ANTENNA AMP. 133
Removal and Installation 133

PUSH-BUTTON IGNITION SWITCH 134
Removal and Installation 134

PRECAUTION

PRECAUTIONS

Precaution for Supplemental Restraint System (SRS) "AIR BAG" and "SEAT BELT PRE-TENSIONER"

INFOID:0000000013023507

The Supplemental Restraint System such as “AIR BAG” and “SEAT BELT PRE-TENSIONER”, used along with a front seat belt, helps to reduce the risk or severity of injury to the driver and front passenger for certain types of collision. This system includes seat belt switch inputs and dual stage front air bag modules. The SRS system uses the seat belt switches to determine the front air bag deployment, and may only deploy one front air bag, depending on the severity of a collision and whether the front occupants are belted or unbelted. Information necessary to service the system safely is included in the “SRS AIR BAG” and “SEAT BELT” of this Service Manual.

WARNING:

Always observe the following items for preventing accidental activation.

- **To avoid rendering the SRS inoperative, which could increase the risk of personal injury or death in the event of a collision that would result in air bag inflation, all maintenance must be performed by an authorized NISSAN/INFINITI dealer.**
- **Improper maintenance, including incorrect removal and installation of the SRS, can lead to personal injury caused by unintentional activation of the system. For removal of Spiral Cable and Air Bag Module, see “SRS AIR BAG”.**
- **Never use electrical test equipment on any circuit related to the SRS unless instructed to in this Service Manual. SRS wiring harnesses can be identified by yellow and/or orange harnesses or harness connectors.**

PRECAUTIONS WHEN USING POWER TOOLS (AIR OR ELECTRIC) AND HAMMERS

WARNING:

Always observe the following items for preventing accidental activation.

- **When working near the Air Bag Diagnosis Sensor Unit or other Air Bag System sensors with the ignition ON or engine running, never use air or electric power tools or strike near the sensor(s) with a hammer. Heavy vibration could activate the sensor(s) and deploy the air bag(s), possibly causing serious injury.**
- **When using air or electric power tools or hammers, always switch the ignition OFF, disconnect the battery, and wait at least 3 minutes before performing any service.**

Precaution for Procedure without Cowl Top Cover

INFOID:0000000013042438

When performing the procedure after removing cowl top cover, cover the lower end of windshield with urethane, etc to prevent damage to windshield.

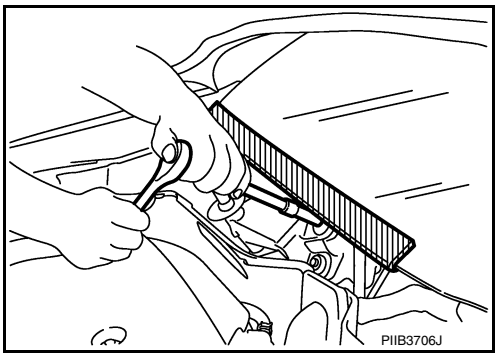

Precautions For Xenon Headlamp Service

INFOID:0000000013042442

WARNING:

Comply with the following warnings to prevent any serious accident.

- **Disconnect the battery cable (negative terminal) or the power supply fuse before installing, removing, or touching the xenon headlamp (bulb included). The xenon headlamp contains high-voltage generated parts.**
- **Never work with wet hands.**
- **Check the xenon headlamp ON-OFF status after assembling it to the vehicle. Never turn the xenon headlamp ON in other conditions. Connect the power supply to the vehicle-side connector.**

(Turning it ON outside the lamp case may cause fire or visual impairments.)
- **Never touch the bulb glass immediately after turning it OFF. It is extremely hot.**

CAUTION:

Comply with the following cautions to prevent any error and malfunction.
- **Install the xenon bulb securely. (Insufficient bulb socket installation may melt the bulb, the connector, the housing, etc. by high-voltage leakage or corona discharge.)**
- **Never perform HID circuit inspection with a tester.**
- **Never touch the xenon bulb glass with hands. Never put oil and grease on it.**
- **Dispose of the used xenon bulb after packing it in thick vinyl without breaking it.**
- **Never wipe out dirt and contamination with organic solvent (thinner, gasoline, etc.).**

Precautions for Removing Battery Terminal

INFOID:0000000013023607

When disconnecting the battery terminal, pay attention to the following.
- Always use a 12V battery as power source.
- Never disconnect battery terminal while engine is running.
- When removing the 12V battery terminal, turn OFF the ignition switch and wait at least 30 seconds.
- For vehicles with the engine listed below, remove the battery terminal after a lapse of the specified time:

D4D engine	: 20 minutes	YS23DDT	: 4 minutes
HRA2DDT	: 12 minutes	YS23DDTT	: 4 minutes
K9K engine	: 4 minutes	ZD30DDTi	: 60 seconds
M9R engine	: 4 minutes	ZD30DDTT	: 60 seconds
R9M engine	: 4 minutes		
V9X engine	: 4 minutes		
YD25DDTi	: 2 minutes		

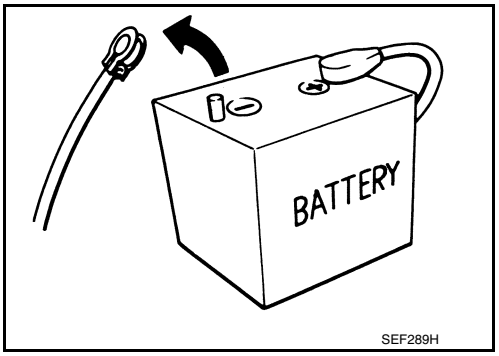

NOTE:
ECU may be active for several tens of seconds after the ignition switch is turned OFF. If the battery terminal is removed before ECU stops, then a DTC detection error or ECU data corruption may occur.
- After high-load driving, if the vehicle is equipped with the V9X engine, turn the ignition switch OFF and wait for at least 15 minutes to remove the battery terminal.

NOTE:
- Turbocharger cooling pump may operate in a few minutes after the ignition switch is turned OFF.
- Example of high-load driving
  - Driving for 30 minutes or more at 140 km/h (86 MPH) or more.
  - Driving for 30 minutes or more on a steep slope.
- For vehicles with the 2-batteries, be sure to connect the main battery and the sub battery before turning ON the ignition switch.

NOTE:
If the ignition switch is turned ON with any one of the terminals of main battery and sub battery disconnected, then DTC may be detected.
- After installing the 12V battery, always check "Self Diagnosis Result" of all ECUs and erase DTC.

NOTE:
The removal of 12V battery may cause a DTC detection error.

SYSTEM DESCRIPTION

COMPONENT PARTS

Component Parts Location

INFOID:0000000012406068

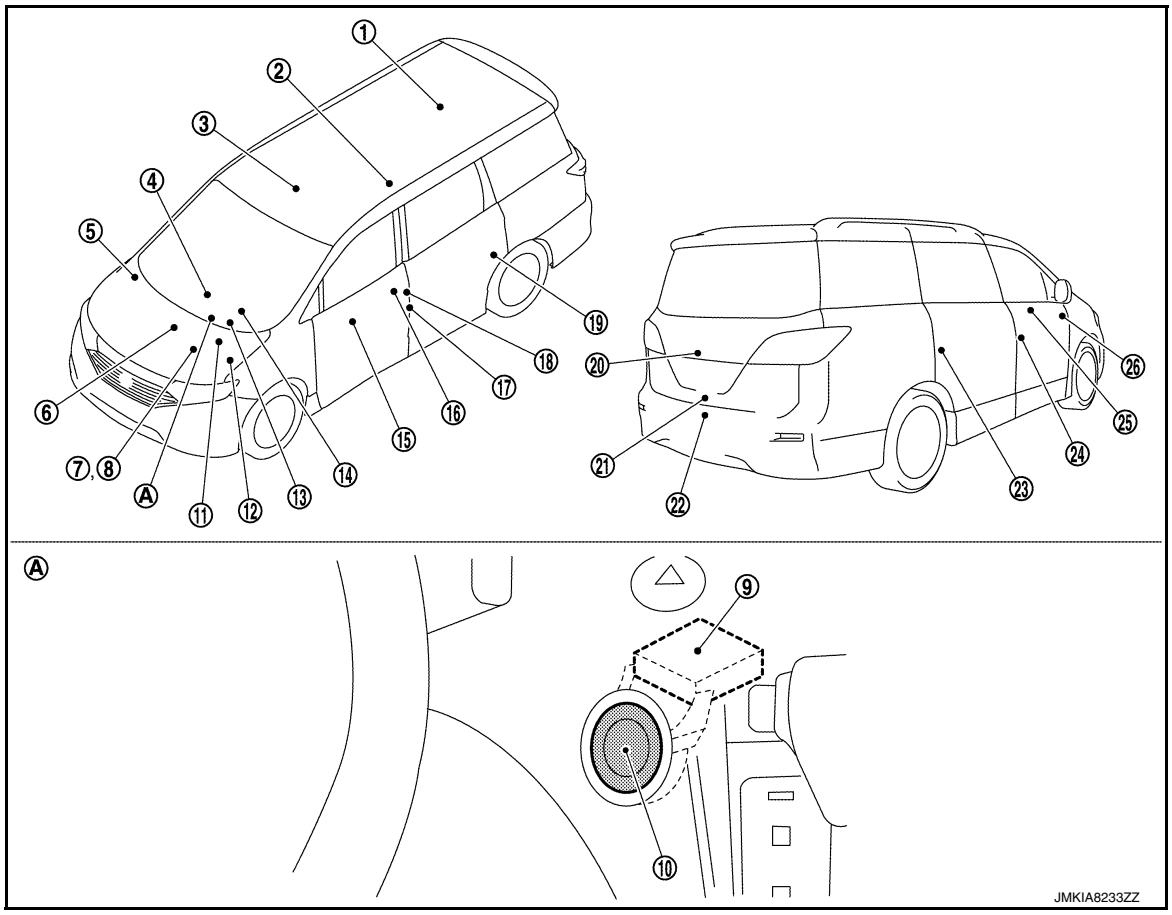

A. Behind push-button ignition switch

No.	Component	Function
1	Inside key antenna (Luggage room)	Inside key antenna (Luggage room) detects whether Intelligent Key is inside the vehicle or not, and then transmits the signal to BCM. Refer to DLK-18, "DOOR LOCK SYSTEM : Component Parts Location" for detailed installation location.
2	Remote keyless entry receiver	Remote keyless entry receiver receives each button operation signal and electronic key ID signal from Intelligent Key, and then transmits the signal to BCM. Refer to DLK-18, "DOOR LOCK SYSTEM : Component Parts Location" for detailed installation location.
3	Inside key antenna (Console)	Inside key antenna (Console) detects whether Intelligent Key is inside the vehicle or not, and then transmits the signal to BCM. Refer to DLK-18, "DOOR LOCK SYSTEM : Component Parts Location" for detailed installation location.
4	Inside key antenna (Instrument center)	Inside key antenna (Instrument center) detects whether Intelligent Key is inside the vehicle or not, and then transmits the signal to BCM. Refer to DLK-18, "DOOR LOCK SYSTEM : Component Parts Location" for detailed installation location.

No.	Component	Function
5	ABS actuator and electric unit (control unit)	ABS actuator and electric unit (control unit) transmits the vehicle speed signal to BCM via CAN communication. BCM also receives the vehicle speed signal from combination meter via CAN communication. BCM compares both signals to detect the vehicle speed. Refer to BRC-9, "Component Parts Location" for detailed installation location.
6	Stop lamp relay*	Stop lamp relay is used to send the stop lamp switch signal to BCM. Refer to BRC-9, "Component Parts Location" for detailed installation location.
7	TCM	TCM receives the shift position signal from transmission range switch, and then transmits the P/N position signal to BCM via CAN communication. BCM confirms the selector lever position with the following 5 signals. • P position signal from CVT shift selector (detention switch) • P/N position signal from transmission range switch • P position signal from IPDM E/R (CAN) • P/N position signal from IPDM E/R (CAN) • P/N position signal from TCM (CAN) IPDM E/R confirms the selector lever position with the following 3 signals. • P position signal from CVT shift selector (detention switch) • P/N position signal from transmission range switch • P/N position signal from BCM (CAN) Refer to TM-12, "CVT CONTROL SYSTEM : Component Parts Location" for detailed installation location.
8	ECM	ECM controls the engine. When ignition switch is turned ON, BCM starts communication with ECM and performs the ID verification between BCM and ECM. If the verification result is OK, the engine can start. If the verification result is NG, the engine can not start. Refer to EC-17, "ENGINE CONTROL SYSTEM : Component Parts Location" for detailed installation location.
9	NATS antenna amp.	Refer to SEC-9, "NATS Antenna Amp.".
10	Push-button ignition switch	Push-button ignition switch has push switch inside which detects that push-button ignition switch is pressed, and then transmits ON/OFF signal to BCM. BCM changes the ignition switch position with the operation of push-button ignition switch. BCM maintains the ignition switch position status while push-button ignition switch is not operated.
11	Stop lamp switch	Stop lamp switch detects that brake pedal is depressed, and then transmits ON/OFF signal to BCM. Refer to BRC-9, "Component Parts Location" for detailed installation location.
12	IPDM E/R	Starter control relay and starter relay are integrated in IPDM E/R and used for the engine starting function. Starter relay is controlled by BCM, and starter control relay is controlled by IPDM E/R while communicating with BCM. IPDM E/R sends the starter control relay and starter relay status signal to BCM. Refer to PCS-4, "IPDM E/R : Component Parts Location" for detailed installation location.
13	BCM	BCM controls INTELLIGENT KEY SYSTEM (ENGINE START FUNCTION), NISSAN VEHICLE IMMOBILIZER SYSTEM-NATS [NVIS (NATS)] and VEHICLE SECURITY SYSTEM. BCM performs the ID verification between BCM and Intelligent Key when the Intelligent Key is carried into the detection area of inside key antenna, and push-button ignition switch is pressed. If the ID verification result is OK, ignition switch operation is available. Then, when the ignition switch is turned ON, BCM performs ID verification between BCM and ECM. If the ID verification result is OK, ECM can start engine. Refer to BCS-5, "BODY CONTROL SYSTEM : Component Parts Location" for detailed installation location.
14	Combination meter	Combination meter transmits the vehicle speed signal to BCM via CAN communication. BCM also receives the vehicle speed signal from ABS actuator and electric unit (control unit) via CAN communication. BCM compares both signals to detect the vehicle speed. Security indicator lamp is located on combination meter. Security indicator lamp blinks when ignition switch is in any position other than ON to warn that NISSAN VEHICLE IMMOBILIZER SYSTEM-NATS [NVIS (NATS)] is on board. Refer to MWI-8, "METER SYSTEM : Combination Meter".

No.	Component	Function
15	Power window main switch	Door lock and unlock switch is integrated into the power window main switch. Door lock and unlock switch transmits door lock/unlock operation signal to BCM. Refer to PWC-9, "Power Window Main Switch" (front window anti-pinch) or PWC-75, "Power Window Main Switch" (driver side window anti-pinch).
16	Front door outside handle assembly LH	Outside key antenna and door request switch are integrated into front door outside handle assembly. • Outside key antenna detects whether Intelligent Key is within the detection area or not, and then transmits signal to BCM. • Front door request switch transmits door lock/unlock request signal to BCM. Refer to DLK-27, "Front Door Outside Handle Assembly (Outside Key Antenna)".
17	Front door switch (Driver side)	Door switch detects door open/close condition and then transmits ON/OFF signal to BCM. Refer to DLK-28, "Front Door Switch".
18	Front door lock assembly (Driver side)	Door key cylinder switch is integrated into front door lock assembly (driver side). Door key cylinder switch detects door LOCK/UNLOCK operation using mechanical key, and then transmits the operation signal to BCM. Refer to DLK-28, "Front Door Lock Assembly (Driver Side)".
19	Sliding door switch LH	Door switch detects door open/close condition and then transmits ON/OFF signal to BCM. Refer to DLK-31, "Sliding Door Switch".
20	Back door opener switch assembly	Back door opener switch and back door request switch are integrated into back door opener switch assembly. • Back door opener switch transmits back door opening operation signal to BCM. • Back door request switch transmits door lock/unlock request signal to BCM. Refer to DLK-29, "Back Door Opener Switch".
21	Back door lock assembly	Back door switch is integrated into back door lock assembly. Back door switch detects back door open/close condition, and then transmits ON/OFF signal to BCM. Refer to DLK-29, "Back Door Lock Assembly (Without Automatic Back Door System)" or DLK-30, "Back Door Lock Assembly (With Automatic Back Door System)".
22	Outside key antenna (rear bumper)	Outside key antenna detects whether or not Intelligent Key is within the outside key antenna detection area. Refer to DLK-18, "DOOR LOCK SYSTEM : Component Parts Location" for detailed installation location.
23	Sliding door switch RH	Door switch detects door open/close condition and then transmits ON/OFF signal to BCM. Refer to DLK-31, "Sliding Door Switch".
24	Front door switch (Passenger side)	Door switch detects door open/close condition and then transmits ON/OFF signal to BCM. Refer to DLK-28, "Front Door Switch".
25	Front door outside handle assembly RH	Outside key antenna and door request switch are integrated into front door outside handle assembly. • Outside key antenna detects whether Intelligent Key is within the detection area or not, and then transmits signal to BCM. • Front door request switch transmits door lock/unlock request signal to BCM. Refer to DLK-27, "Front Door Outside Handle Assembly (Outside Key Antenna)".
26	Door lock unlock switch	Door lock and unlock switch is integrated into front power window switch (Passenger side). Door lock and unlock switch transmits door lock/unlock operation signal to BCM. Refer to DLK-28, "Door Lock and Unlock Switch (Driver Side)" or DLK-28, "Door Lock and Unlock Switch (Passenger Side)".

*: Not applicable

CVT Shift Selector (Detention Switch)

INFOID:0000000012406069

Detention switch is integrated into CVT shift sector, and detects that selector lever is locked in the P position, then transmits ON/OFF signal to BCM and IPDM E/R.
BCM confirms the selector lever position with the following 5 signals.
- P position signal from CVT shift selector (detention switch)
- P/N position signal from transmission range switch
- P position signal from IPDM E/R (CAN)
- P/N position signal from IPDM E/R (CAN)
- P/N position signal from TCM (CAN)

IPDM E/R confirms the selector lever position with the following 3 signals.

- P position signal from CVT shift selector (detention switch)
- P/N position signal from transmission range switch
- P/N position signal from BCM (CAN)

NATS Antenna Amp.

INFOID:0000000012406070

The ID verification is performed between BCM and transponder integrated into Intelligent Key via NATS antenna amp. when Intelligent Key backside is contacted to push-button ignition switch in case that Intelligent Key battery is discharged. If the ID verification result is OK, the operation of ignition switch is available.

SYSTEM

INTELLIGENT KEY SYSTEM/ENGINE START FUNCTION

INTELLIGENT KEY SYSTEM/ENGINE START FUNCTION : System Description

INFOID:0000000012406071

SYSTEM DIAGRAM

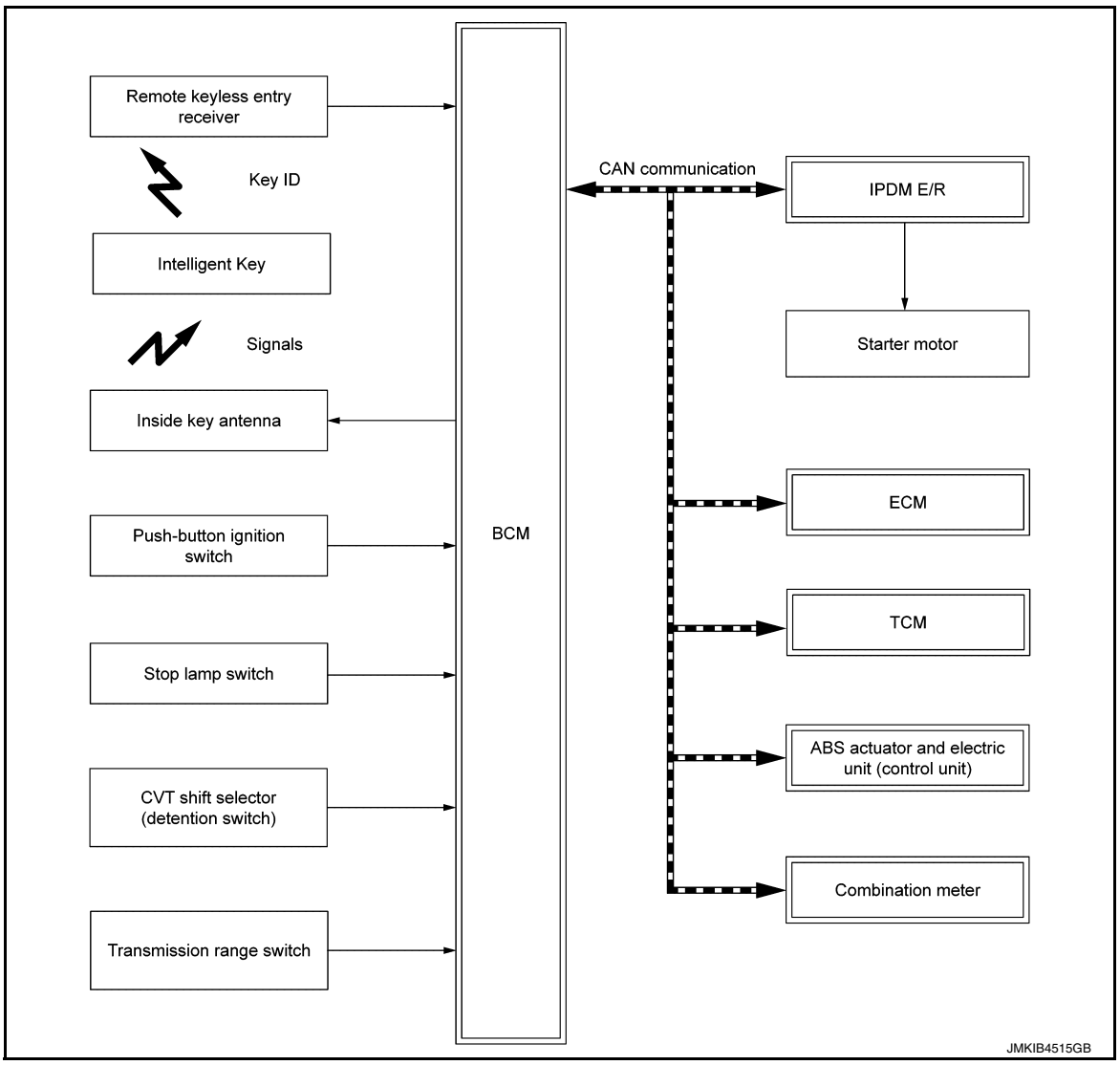

INPUT/OUTPUT SIGNAL CHART

Input Signal Item

Transmit unit	Signal name	
ECM	CAN communication	ID verification signal Engine status signal
IPDM E/R		Push-button ignition switch status signal Starter relay status signal Starter control relay signal Detention switch signal Interlock/PNP switch signal
Combination meter		Vehicle speed signal (Meter)
ABS actuator and electric unit (control unit)		Vehicle speed signal (ABS)
TCM		Shift position signal

Transmit unit	Signal name
Transmission range switch	P/N position signal
Remote keyless entry receiver	Key ID signal
Push-button ignition switch	Push-button ignition switch operation signal
Each door switch	Door open/close condition signal
Stop lamp switch	Brake pedal operation signal
CVT shift selector (detention switch)	P position signal

Output Signal Item

Reception unit	Signal name	
Combination meter	CAN communication	Key warning lamp signal
ECM		ID verification signal
Inside key antenna	Key ID request signal	

SYSTEM DESCRIPTION

- The engine start function of Intelligent Key system makes it possible to start and stop the engine without using the key, based on the electronic ID verification. The electronic ID verification is performed between BCM and Intelligent Key when the push-button ignition switch is pressed while the Intelligent Key is within the detection area of inside key antenna.
  NOTE:
  The driver should carry the Intelligent Key at all times.
- Intelligent Key has 2 IDs [Intelligent Key ID and NVIS (NATS) ID]. It can perform the door lock/unlock operation and the push-button ignition switch operation when the registered Intelligent Key is carried.
- If the ID is successfully verified, when push-button ignition switch is pressed, the engine can be started.
- Up to 4 Intelligent Keys can be registered (Including the standard Intelligent Key) upon request from the customer.
  NOTE:
  Refer to DLK-36, "INTELLIGENT KEY SYSTEM : System Description" for any functions other than engine start function of Intelligent Key system.

PRECAUTIONS FOR INTELLIGENT KEY SYSTEM

The transponder [the chip for NVIS (NATS) ID verification] is integrated into the Intelligent Key. (For the conventional models, it is integrated into the mechanical key.) Therefore, ID verification cannot be performed by mechanical key only.
In that case, NVIS (NATS) ID verification can be performed when Intelligent Key backside is contacted to push-button ignition switch while brake pedal is depressed. If verification result is OK, engine can be started.

OPERATION WHEN INTELLIGENT KEY IS CARRIED

1. When the push-button ignition switch is pressed, the BCM activates the inside key antenna and transmits the request signal to the Intelligent Key.
2. The Intelligent Key receives the request signal and transmits the Intelligent Key ID signal to the BCM.
3. BCM receives the Intelligent Key ID signal via remote keyless entry receiver and verifies it with the registered ID.
4. BCM turns ACC relay ON and transmits the ignition power supply ON signal to IPDM E/R.
5. IPDM E/R turns the ignition relay ON and starts the ignition power supply.
6. IPDM E/R turns the starter control relay ON for engine starting in advance.
7. BCM detects the selector lever position and brake pedal operation condition.
8. BCM transmits the starter request signal to IPDM E/R and turns the starter relay in IPDM E/R ON if BCM judges that the engine start condition* is satisfied.
9. Power supply is supplied through the starter relay and the starter control relay to operate the starter motor.
   CAUTION:
   If a malfunction is detected in the Intelligent Key system, the “KEY” warning lamp on the combination meter illuminates. At that time, the engine cannot be started.

10. When BCM receives feedback signal from ECM indicating that the engine is started, the BCM transmits a stop signal to IPDM E/R and stops cranking by turning OFF the starter relay. (If engine start is unsuccessful, cranking stops automatically within 5 seconds.)
    CAUTION:
    When the Intelligent Key is carried outside of the vehicle (inside key antenna detection area) while the power supply is in the ACC or ON position, even if the engine start condition* is satisfied, the engine cannot be started.

*: For the engine start condition, refer to “IGNITION SWITCH POSITION CHANGE TABLE BY PUSH-BUTTON IGNITION SWITCH OPERATION”.

OPERATION RANGE

Engine can be started when Intelligent Key is inside the vehicle. However, sometimes engine may not start when Intelligent Key is on instrument panel or in glove box.

ENGINE START OPERATION WHEN INTELLIGENT KEY IS CONTACTED TO PUSH-BUTTON IGNITION SWITCH

When Intelligent Key battery is discharged, NVIS (NATS) ID verification between transponder in Intelligent Key and BCM is performed when Intelligent Key backside is contacted to push-button ignition switch while brake pedal is depressed. If the verification result is OK, engine can be started.

IGNITION SWITCH POSITION CHANGE TABLE BY PUSH-BUTTON IGNITION SWITCH OPERATION

The ignition switch position can be changed by the following operations.

NOTE:

- When an Intelligent Key is within the detection area of inside key antenna or when Intelligent Key backside is contacted to push-button ignition switch, it is equivalent to the operations below.
- When starting the engine, the BCM monitors under the engine start conditions,

CVT models

- Brake pedal operation condition
- Selector lever position
- Vehicle speed

Vehicle speed: less than 4 km/h (2.5 MPH)

Power supply position	Condition		Push-button ignition switch operation frequency
	Selector lever	Brake pedal operation condition	
OFF → ACC	—	Not depressed	1
OFF → ACC → ON	—	Not depressed	2
OFF → ACC → ON → OFF	—	Not depressed	3
OFF → START ACC → START ON → START	P or N position	Depressed	1
Engine is running → OFF	—	—	1

Vehicle speed: 4 km/h (2.5 MPH) or more

Power supply position	Condition		Push-button ignition switch operation frequency
	Selector lever	Brake pedal operation condition	
Engine is running → ACC	—	—	Emergency stop operation
Engine stall return operation while driving	N position	Not depressed	1

Emergency stop operation

- Press and hold the push-button ignition switch for 2 seconds or more.
- Press the push-button ignition switch 3 times or more within 1.5 seconds.

INTELLIGENT KEY SYSTEM/ENGINE START FUNCTION : Circuit Diagram

INFOID:0000000012406072

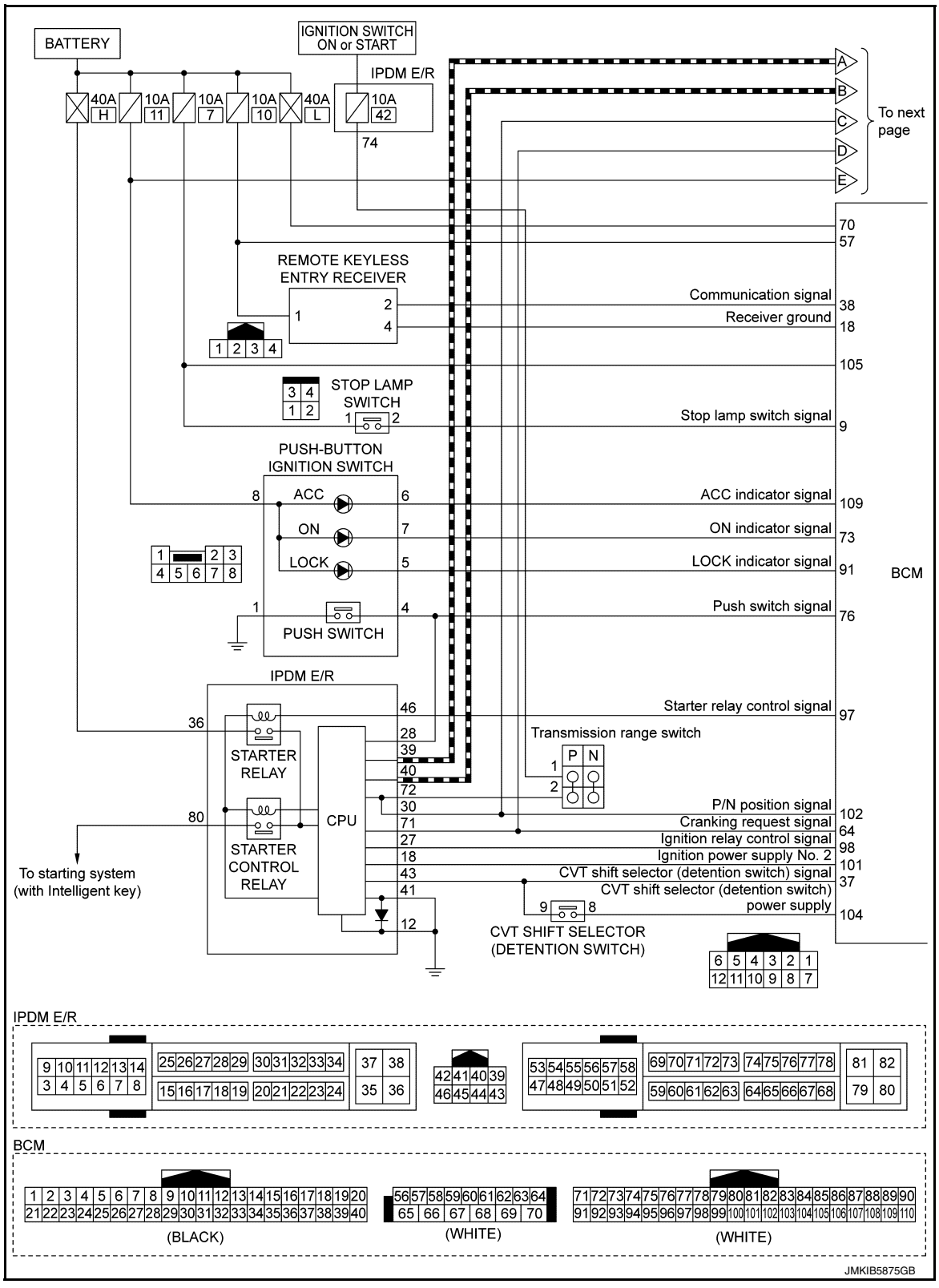

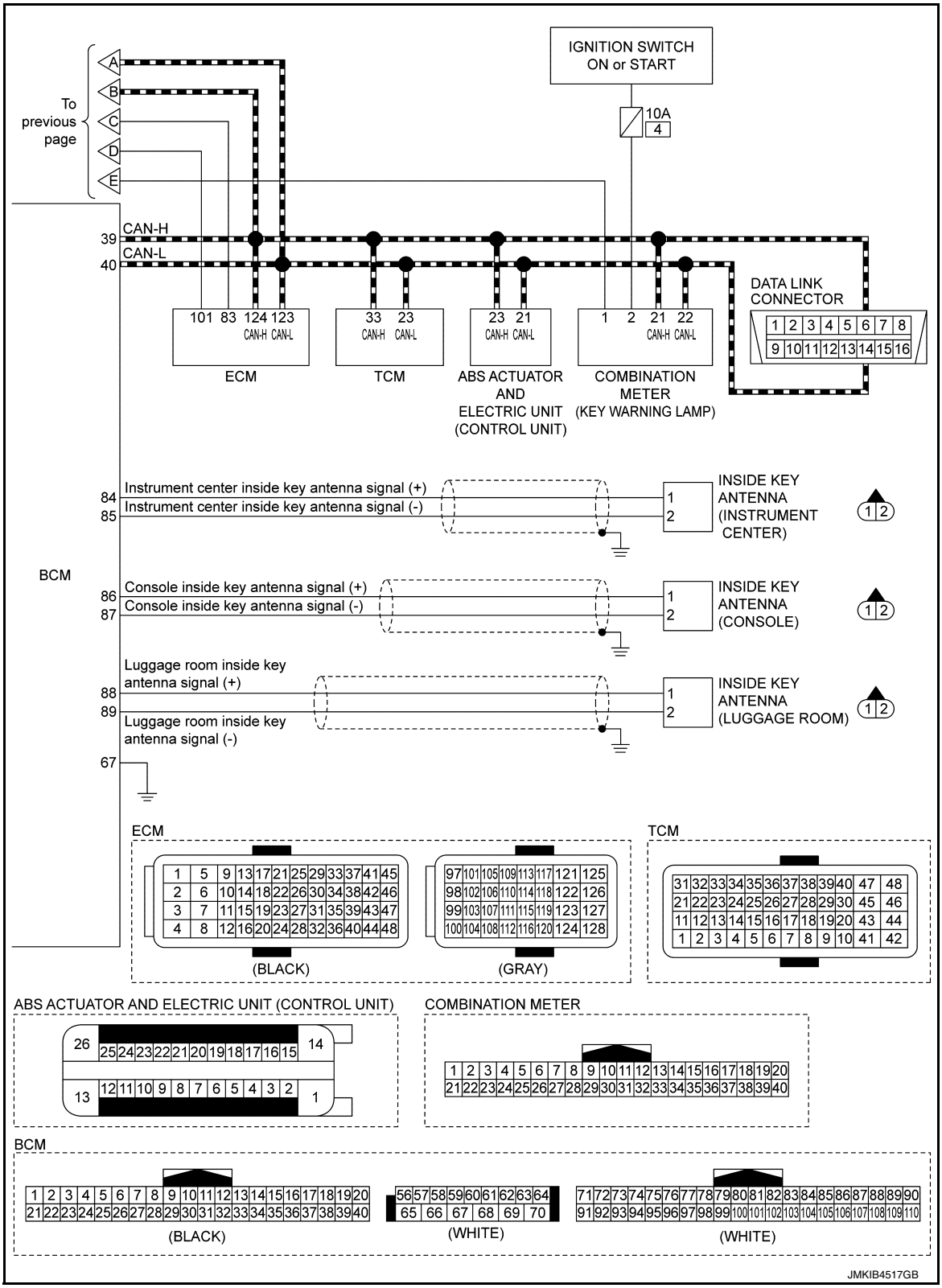

NISSAN VEHICLE IMMOBILIZER SYSTEM-NATS

NISSAN VEHICLE IMMOBILIZER SYSTEM-NATS : System Description

INFOID:0000000012406073

SYSTEM DIAGRAM

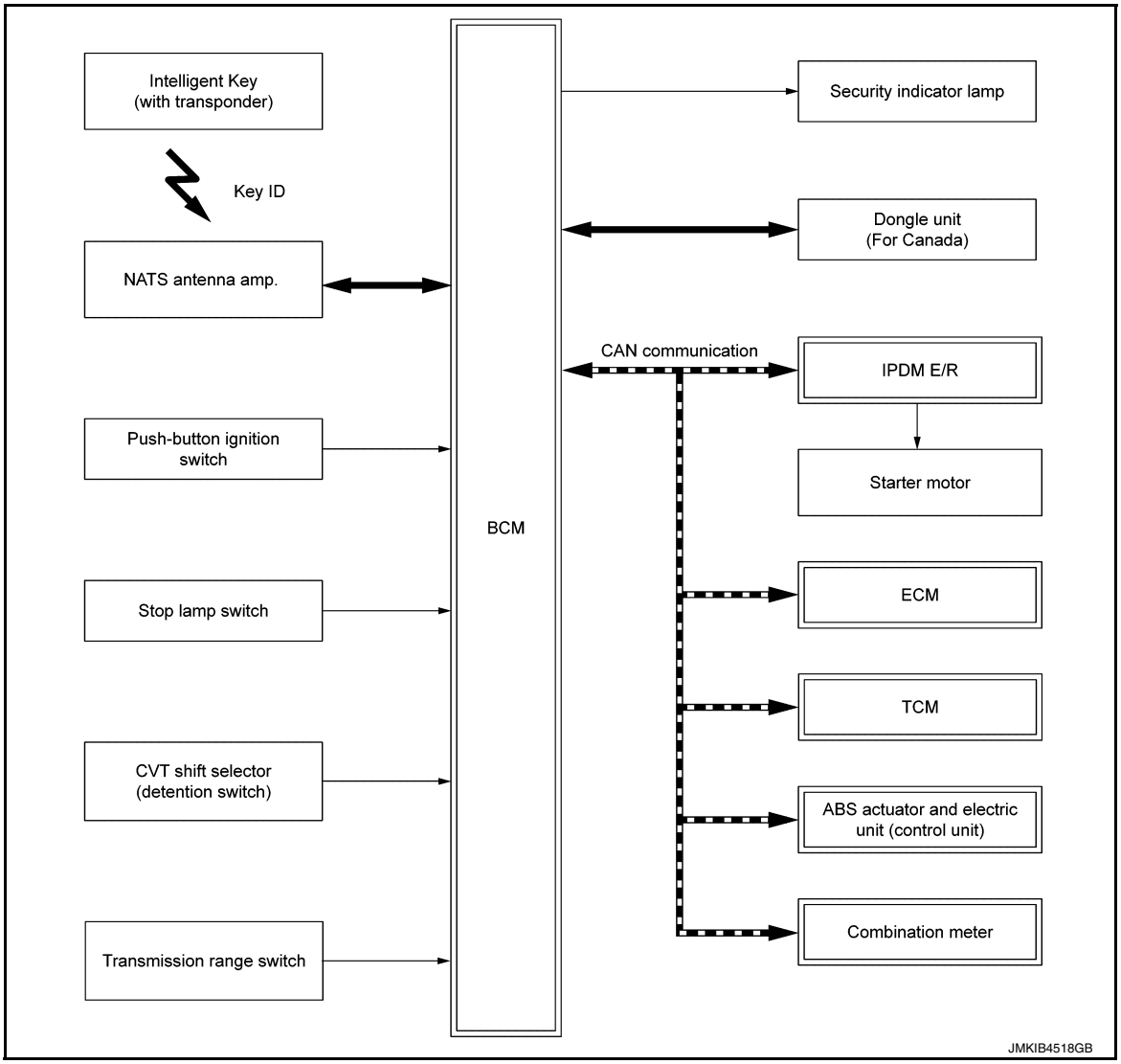

INPUT/OUTPUT SIGNAL CHART

Input Signal Item

Transmit unit	Signal name	
ECM	CAN communication	ID verification signal Engine status signal
IPDM E/R		Push-button ignition switch status signal Starter relay status signal Starter control relay signal Detention witch signal Interlock/PNP switch signal
Combination meter		Vehicle speed signal (Meter)
ABS actuator and electric unit (control unit)		Vehicle speed signal (ABS)
TCM		Shift position signal
Transmission range switch	P/N position signal	
NATS antenna amp.	Key ID signal	
Push-button ignition switch	Push-button ignition switch operation signal	

Transmit unit	Signal name
Each door switch	Door open/close condition signal
Stop lamp switch	Brake pedal operation signal
CVT shift selector (detention switch)	P position signal

Output Signal Item

Reception unit	Signal name	
ECM	CAN communication	ID verification signal
Combination meter	Security indicator lamp signal	
Inside key antenna	Key ID request signal	

SYSTEM DESCRIPTION

- The Nissan Vehicle Immobilizer System-NATS [NVIS (NATS)] prevents the engine from being started by Intelligent Key whose ID is not registered to the vehicle (BCM). It has higher protection against auto theft involving the duplication of mechanical keys.
- The ignition key integrated in the Intelligent Key cannot start the engine. When the Intelligent Key battery is discharged, the NVIS (NATS) ID verification is performed between the transponder integrated with Intelligent Key and BCM via NATS antenna amp. when the Intelligent Key backside is contacted to push-button ignition switch while brake pedal is depressed. If the verification result is OK, the engine start operation can be performed by the push-button ignition switch operation.
- Locate the security indicator lamp and always blinks it when the ignition switch is in any position except ON to warn that the vehicle is equipped with Nissan Anti-Theft System (NATS).
- Up to 4 Intelligent Keys can be registered (including the standard ignition key) upon request from the owner.
- When replacing ECM, BCM or Intelligent Key, the specified procedure (Initialization and registration) using CONSULT is required.
- Possible symptom of NATS malfunction is “Engine can not start”. This symptom also occurs because of other than NATS malfunction, so start the trouble diagnosis according to SEC-57, "Work Flow".
- If ECM other than genuine part is installed, the engine cannot be started.
  For ECM replacement procedure, refer to SEC-60, "ECM : Work Procedure".

PRECAUTIONS FOR KEY REGISTRATION

- The ID registration is a procedure that erases the current NVIS (NATS) ID once, and then registers a new ID. Therefore before starting the registration operation, collect all registered Intelligent Keys from the customer.
- When registering the Intelligent Key, perform only one procedure to simultaneously register both IDs [NVIS (NATS) ID and Intelligent Key ID].

SECURITY INDICATOR LAMP

- Security indicator lamp warns that the vehicle is equipped with NATS.
- Security indicator lamp always blinks when the ignition switch is in any position other than ON.

NOTE:
Because security indicator lamp is highly efficient, the battery is barely affected.

ENGINE START OPERATION WHEN INTELLIGENT KEY IS CONTACTED TO PUSH-BUTTON IGNITION SWITCH

1. When brake pedal is depressed while selector lever is in the P position, BCM activates NATS antenna amp. that is located behind push-button ignition switch.
2. When Intelligent Key (transponder built-in) backside is contacted to push-button ignition switch, BCM starts NVIS (NATS) ID verification between BCM and Intelligent Key (transponder built-in) via NATS antenna amp.
3. When NATS ID verification result is OK, buzzer in combination meter sounds and BCM transmits the result to ECM.
4. BCM turns ACC relay ON and transmits ignition power supply ON signal to IPDM E/R.
5. IPDM E/R turns the ignition relay ON and starts the ignition power supply.
6. IPDM E/R turns the starter control relay ON for engine starting in advance.
7. BCM detects that the selector lever position and brake pedal operation condition.
8. BCM transmits starter request signal to IPDM E/R and turns the starter relay in IPDM E/R ON if BCM judges that the engine start condition* is satisfied.

9. Power supply is supplied through the starter relay and the starter control relay to operate the starter motor.
10. When BCM receives feedback signal from ECM indicating that the engine is started, BCM transmits a stop signal to IPDM E/R and stops cranking by turning off the starter motor relay. (If engine start is unsuccessful, cranking stops automatically within 5 seconds.)

*: For the engine start condition, refer to “IGNITION SWITCH POSITION CHANGE TABLE BY PUSH-BUTTON IGNITION SWITCH OPERATION” below.

IGNITION SWITCH POSITION CHANGE TABLE BY PUSH-BUTTON IGNITION SWITCH OPERATION

The ignition switch position can be changed by the following operations.

NOTE:

- When an Intelligent Key is within the detection area of inside key antenna or when Intelligent Key backside is contacted to push-button ignition switch, it is equivalent to the operations below.
- When starting the engine, the BCM monitors under the engine start conditions,

CVT models

- Brake pedal operation condition
- Selector lever position
- Vehicle speed

Vehicle speed: less than 4 km/h (2.5 MPH)

Power supply position	Condition		Push-button ignition switch operation frequency
	Selector lever	Brake pedal operation condition	
OFF → ACC	—	Not depressed	1
OFF → ACC → ON	—	Not depressed	2
OFF → ACC → ON → OFF	—	Not depressed	3
OFF → START ACC → START ON → START	P or N position	Depressed	1
Engine is running → OFF	—	—	1

Vehicle speed: 4 km/h (2.5 MPH) or more

Power supply position	Condition		Push-button ignition switch operation frequency
	Selector lever	Brake pedal operation condition	
Engine is running → ACC	—	—	Emergency stop operation
Engine stall return operation while driving	N position	Not depressed	1

Emergency stop operation

- Press and hold the push-button ignition switch for 2 seconds or more.
- Press the push-button ignition switch 3 times or more within 1.5 seconds.

NISSAN VEHICLE IMMOBILIZER SYSTEM-NATS : Circuit Diagram

INFOID:0000000012406074

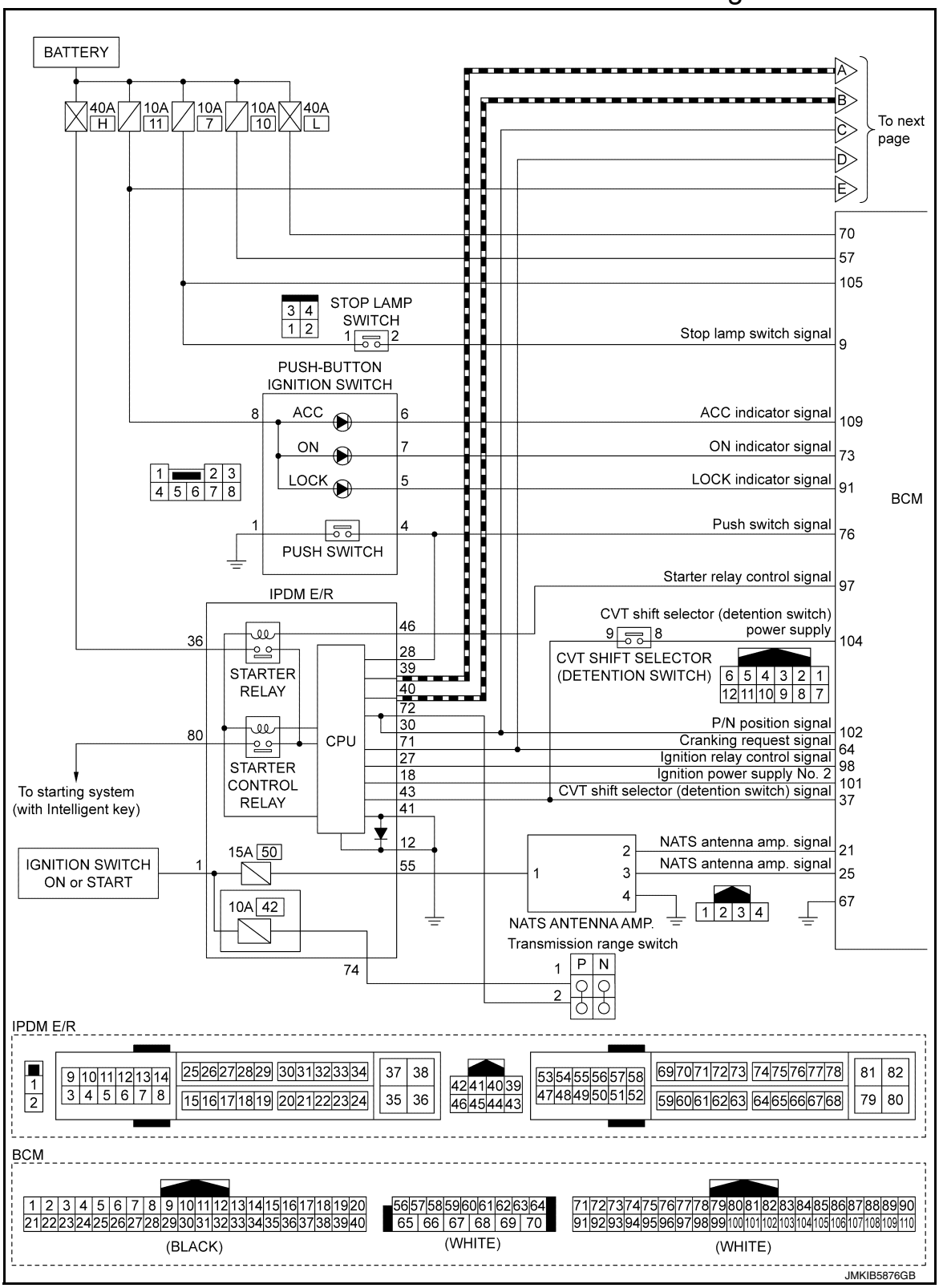

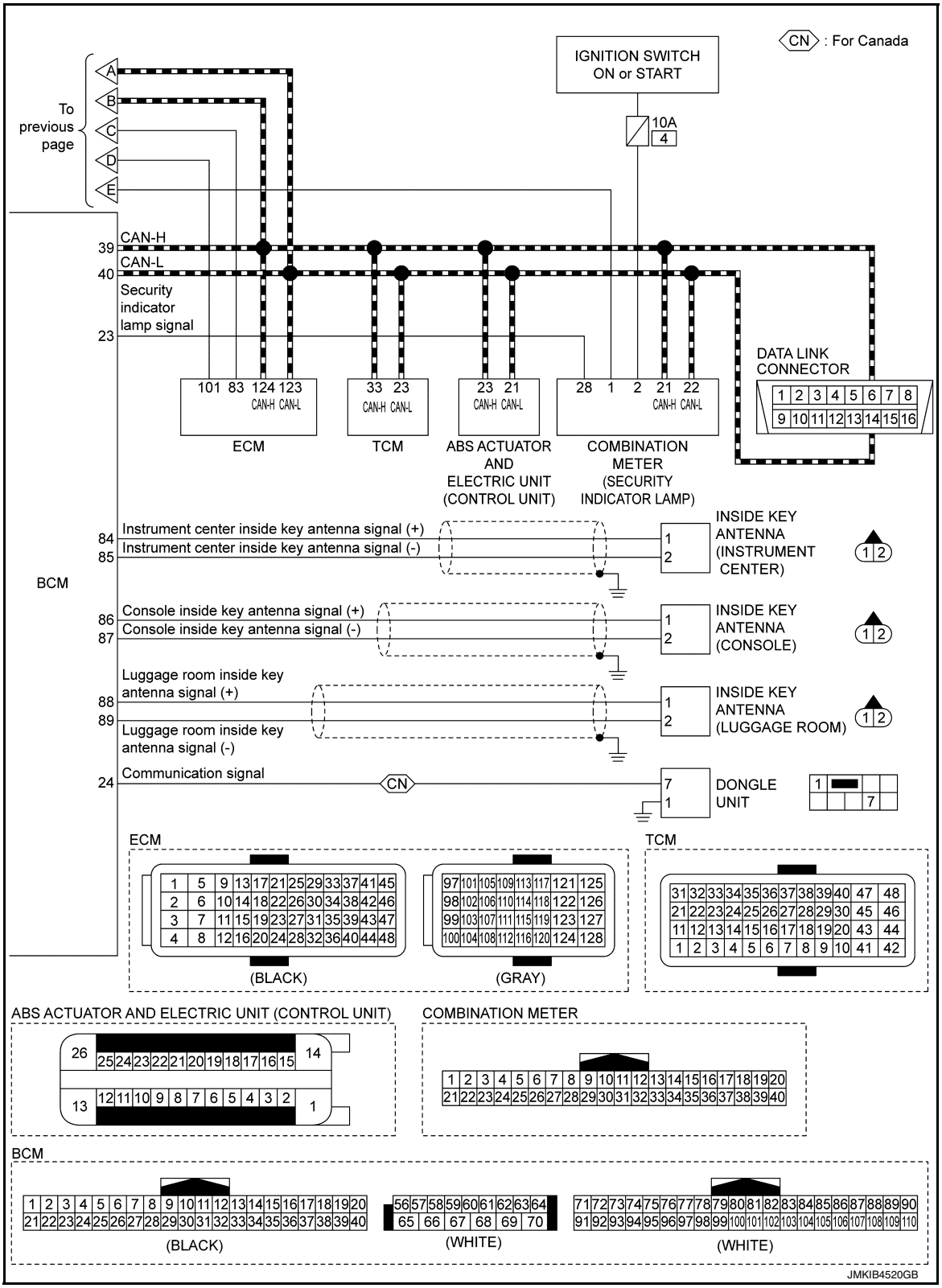

VEHICLE SECURITY SYSTEM

VEHICLE SECURITY SYSTEM : System Diagram

INFOID:0000000012406075

SYSTEM DIAGRAM

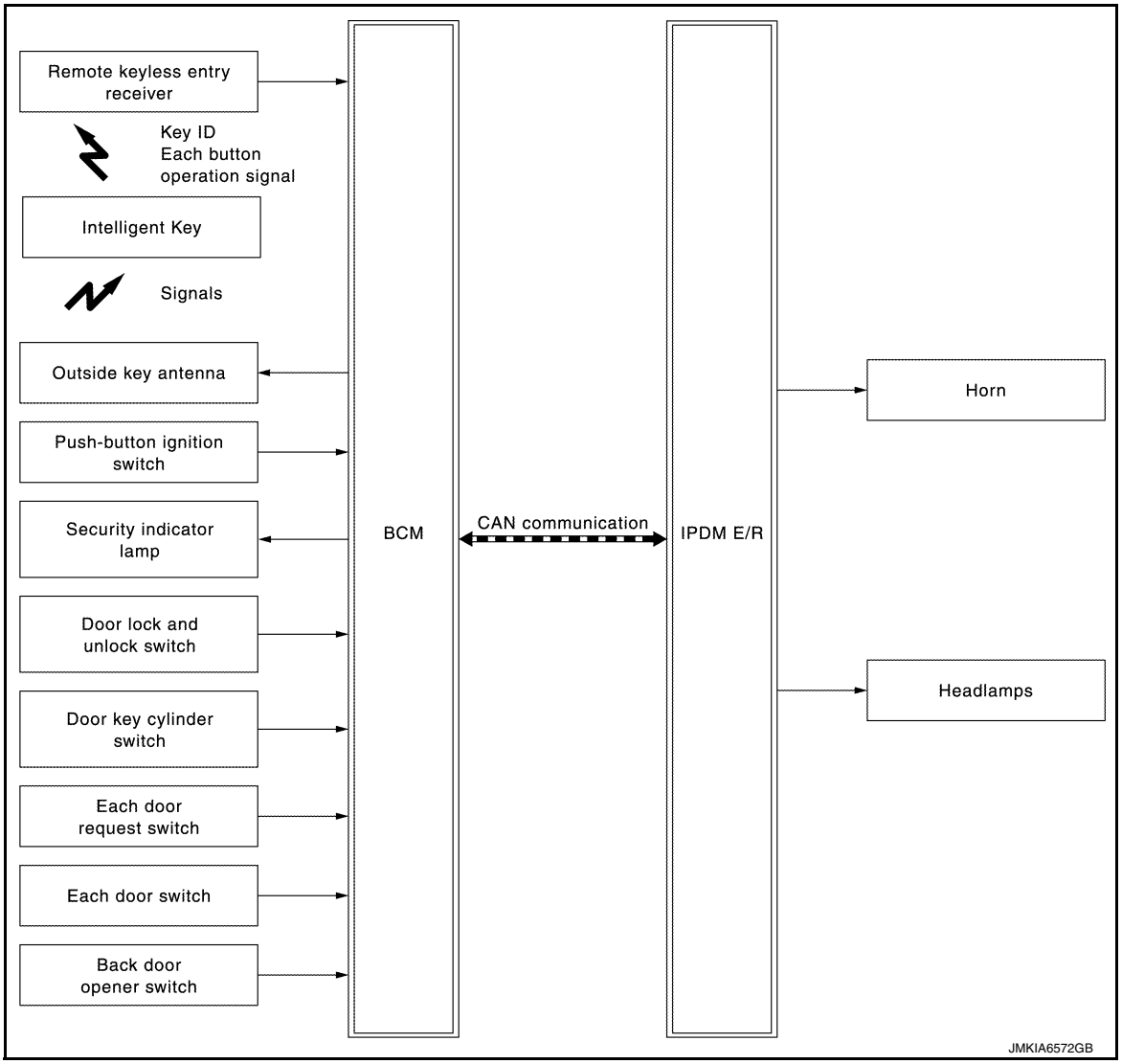

INPUT/OUTPUT SIGNAL CHART

Input Signal Item

Transmit unit	Signal name	
IPDM E/R	CAN communication	Ignition switch status signal
Remote keyless entry receiver	Key ID signal Intelligent Key button operation signal	
Push-button ignition switch	Push-button ignition switch operation signal	
Each door switch	Door open/close condition signal	
Each door request switch	Door lock/unlock request signal	
Door key cylinder switch	Door key cylinder lock/unlock switch signal	
Back door opener switch	Back door opener operation signal	
Door lock and unlock switch	Door lock/unlock switch operation signal	

Output Signal Item

Reception unit	Signal name	
IPDM E/R	CAN communication	Theft warning horn request signal High beam request signal
Combination meter	Security indicator lamp signal	
Outside key antenna	Key ID request signal	

SYSTEM DESCRIPTION

- The vehicle security system has two alarm functions (theft warning alarm and panic alarm), and reduces the possibility of a theft or mischief by activating horns and headlamps intermittently.
- The panic alarm does not start when the theft warning alarm is activating, and the panic alarm stops when the theft warning alarm is activated.
  The priority of the functions are as per the following.

Priority	Function
1	Theft warning alarm
2	Panic alarm

THEFT WARNING ALARM

- The theft warning alarm function activates horn and headlamps intermittently when BCM detects that any door is opened by unauthorized means, while the system is in the ARMED state.
- Security indicator lamp on combination meter always blinks when ignition switch is any position other than ON. Security indicator lamp blinking warns that the vehicle is equipped with a vehicle security system.

Operation Flow

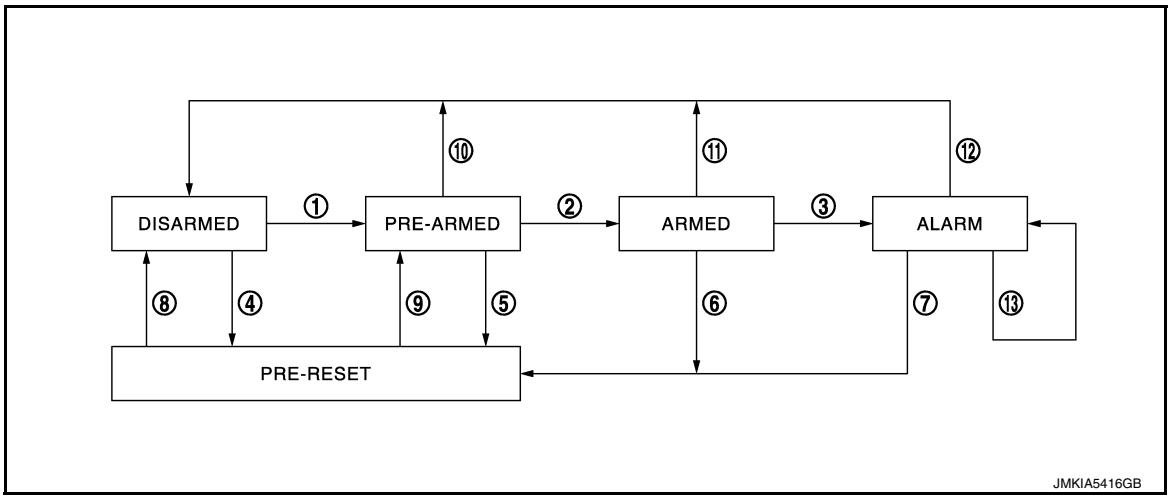

No.	System state	Switching condition		
1	DISARMED to PRE-ARMED	When all conditions of A and one condition of B are satisfied.	A • Ignition switch: OFF • All doors: Closed	B All doors are locked by: • LOCK button of Intelligent Key • Door request switch • Door lock and unlock switch • Door key cylinder LOCK switch
2	PRE-ARMED to ARMED	When all of the following conditions are satisfied for 30 seconds.	• Ignition switch: OFF • All doors: Locked	
3	ARMED to ALARM	When condition A and condition B are satisfied.	A Intelligent Key function: Not used	B • Any door: Open

No.	System state	Switching condition	
4	DISARMED to PRE-RESET	No conditions.	
5	PRE-ARMED to PRE-RESET		
6	ARMED to PRE-RESET		
7	ALARM to PRE-RESET		
8	PRE-RESET to DISARMED		
9	PRE-RESET to PRE-ARMED		
10	PRE-ARMED to DISARMED	When one of the following condition is satisfied.	• Ignition switch: ACC/ON • UNLOCK button of Intelligent Key: ON • BACK DOOR OPEN button of Intelligent Key: ON • Door request switch: ON • UNLOCK switch of door lock and unlock switch: ON • Door key cylinder UNLOCK switch: ON • Back door opener switch: ON • Any door: Open
11	ARMED to DISARMED	When one of the following condition is satisfied.	• Ignition switch: ACC/ON • UNLOCK button of Intelligent Key: ON • BACK DOOR OPEN button of Intelligent Key: ON • Door request switch: ON • Door key cylinder UNLOCK switch: ON • Back door opener switch: ON
12	ALARM to DISARMED		
13	RE-ALARM	When the following condition is satisfied after the ALARM operation is finished.	• Any door: Open

NOTE:

- To lock/unlock all doors by operating remote controller button of Intelligent Key or door request switch, Intelligent Key must be within the detection area of outside key antenna. For details, refer to DLK-40, "DOOR LOCK FUNCTION : System Description".
- To open back door by operating back door opener switch, Intelligent Key must be within the detection area of outside key antenna. For details, refer to DLK-42, "BACK DOOR OPEN FUNCTION : System Description".

DISARMED Phase

The vehicle security system is not set in the DISARMED phase. The vehicle security system stays in this phase while any door is open, because it is assumed that the owner is inside or nearby the vehicle. Security indicator lamp blinks every 2.4 seconds.

When the vehicle security system is reset, each phase switches to the DISARMED phase directly.

PRE-ARMED Phase

The PRE-ARMED phase is the transient state between the DISARMED phase and the ARMED phase. This phase is maintained for 30 seconds, so that the owner can reset the setting due to a mis-operation. This phase switches to the ARMED phase when vehicle conditions are not changed for 30 seconds. Security indicator lamp illuminates while being in this phase.

To reset the PRE-ARMED phase, refer to the switching condition of No. 10 in the table above.

ARMED Phase

The vehicle security system is set, and BCM monitors all necessary inputs. If any door is opened without using Intelligent Key function, vehicle security system switches to the ALARM phase. Security indicator lamp blinks every 2.4 seconds.

To reset the ARMED phase, refer to the switching condition of No. 11 in the table above.

ALARM Phase

BCM transmits “Theft Warning Horn Request” signal and “High Beam Request” signal intermittently to IPDM E/R via CAN communication. In this phase, horns and headlamps are activated intermittently for approximately 50 seconds to warn that the vehicle is accessed by unauthorized means. ON/OFF timing of horns and headlamps are synchronized.

To cancel the ALARM operation, refer to the switching condition of No. 12 in the table above.

NOTE:
If a battery terminal is disconnected during the ALARM phase, theft warning alarm stops. But when the battery terminal is reconnected, theft warning alarm is activated again.

REALARM Phase

When ALARM phase is maintained for 50 seconds without any cancel operation, the system status returns to the ARMED phase. At this time, if BCM still detects unauthorized access to the vehicle, the system is switched to the ALARM phase again. This REALARM operation is carried out a maximum of 2 times.

PRE-RESET Phase

The PRE-RESET phase is the transient state between each phase and DISARMED phase.
The PRE-RESET phase is not available for this models.

PANIC ALARM

- The panic alarm function activates horns and headlamps intermittently when the owner presses the PANIC ALARM button of Intelligent Key outside the vehicle while the ignition switch is OFF.
- When BCM receives panic alarm signal from Intelligent Key, BCM transmits “Theft Warning Horn Request” signal and “High Beam Request” signal intermittently to IPDM E/R via CAN communication. To prevent the activation due to mis-operation of Intelligent Key by owner, the panic alarm function is activated when BCM receives the signal for 0.4 - 0.6 seconds.
- Panic alarm operation is maintained for 25 seconds.
- Panic alarm operation is cancelled when BCM receives one of the following signals.

- LOCK button of Intelligent Key: ON
- UNLOCK button of Intelligent Key: ON
- BACK DOOR OPEN button of Intelligent Key: ON
- PANIC ALARM button of Intelligent Key: Long pressed
- Any door request switch: ON

VEHICLE SECURITY SYSTEM : Circuit Diagram

INFOID:0000000012406076

MODELS WITHOUT AUTOMATIC SLIDE DOOR

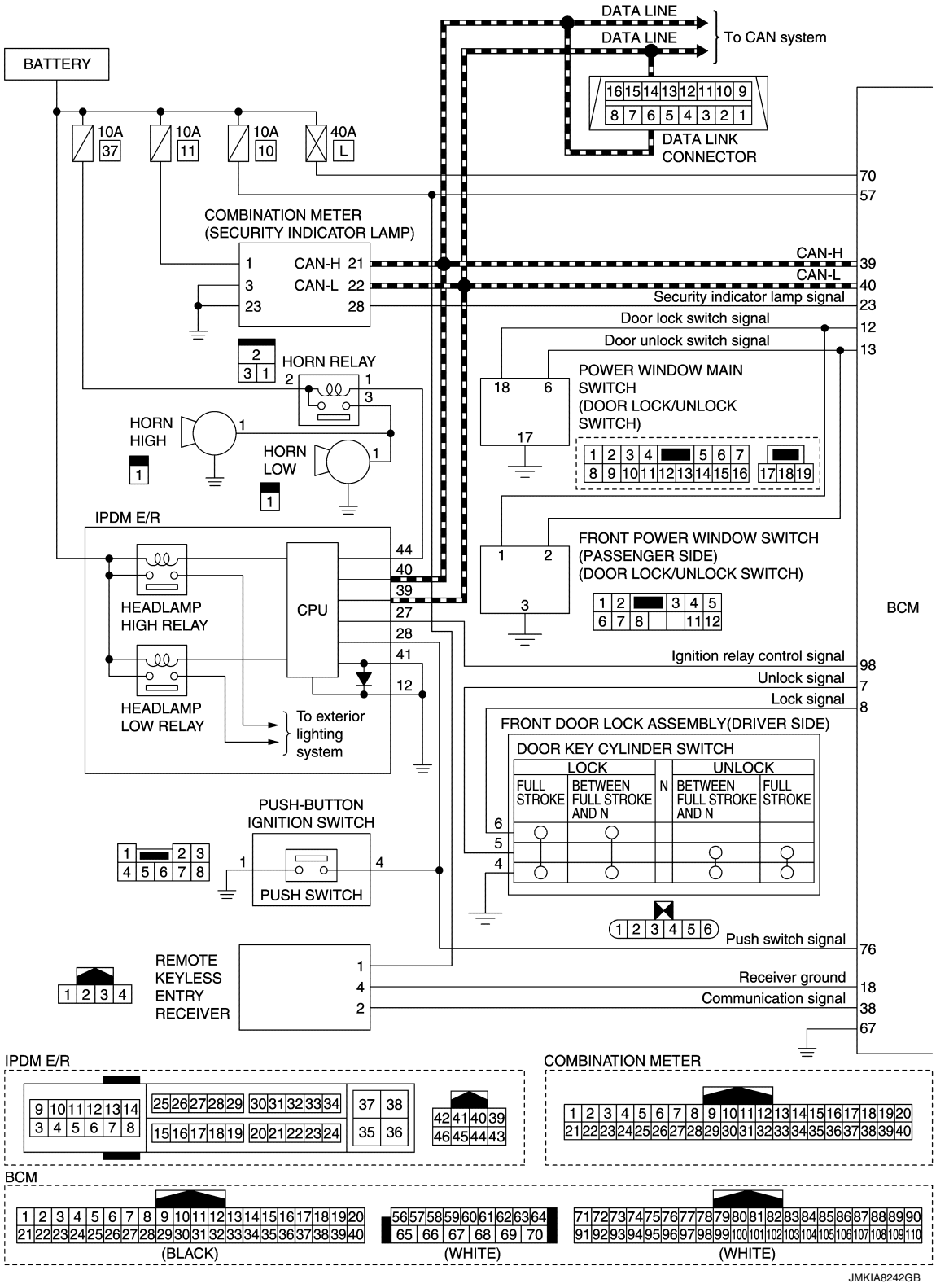

JMKIA8242GB

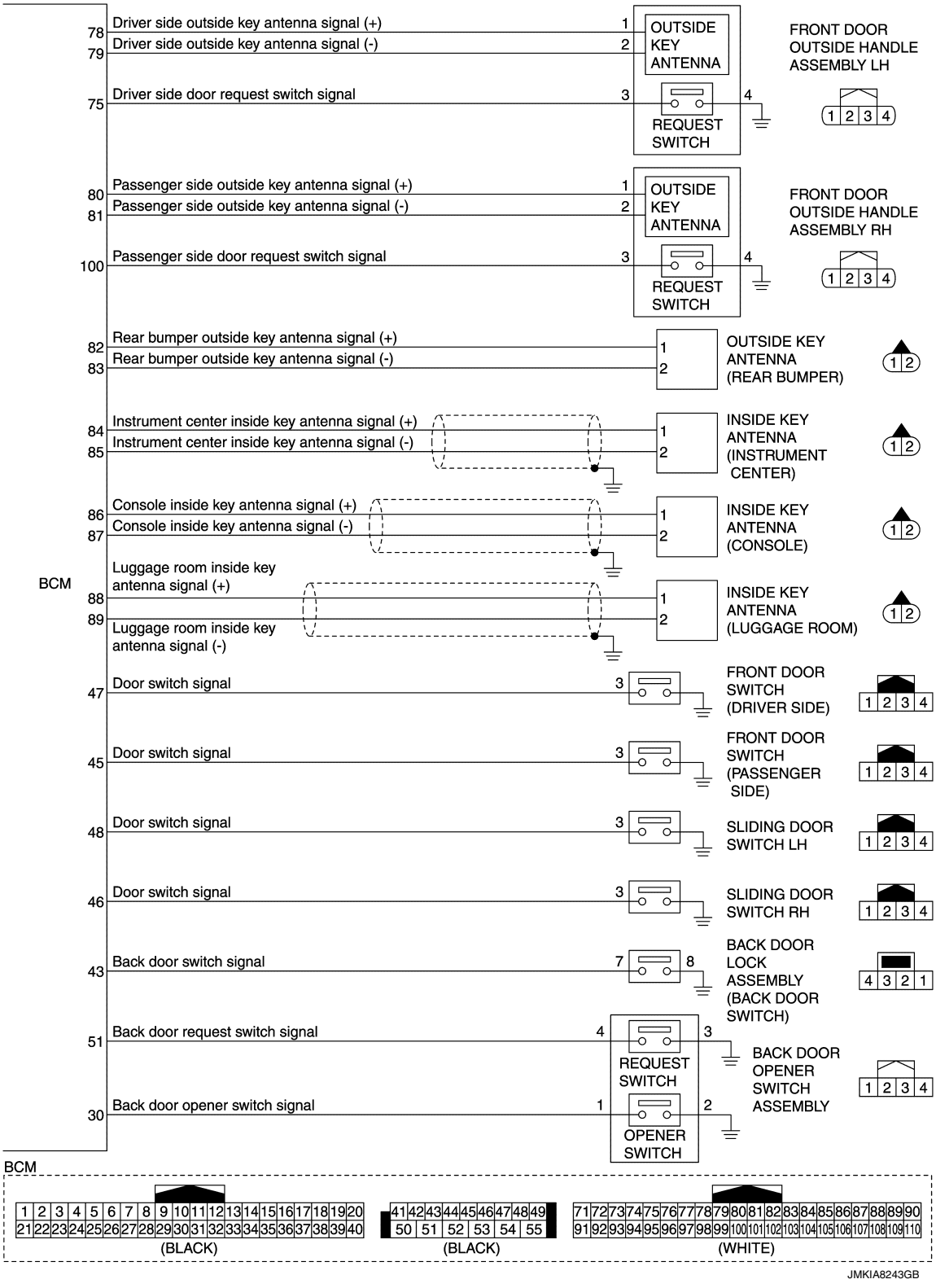
BCM
78 Driver side outside key antenna signal (+)
79 Driver side outside key antenna signal (-)
75 Driver side door request switch signal
OUTSIDE KEY ANTENNA
REQUEST SWITCH
FRONT DOOR OUTSIDE HANDLE ASSEMBLY LH
80 Passenger side outside key antenna signal (+)
81 Passenger side outside key antenna signal (-)
100 Passenger side door request switch signal
FRONT DOOR OUTSIDE HANDLE ASSEMBLY RH
82 Rear bumper outside key antenna signal (+)
83 Rear bumper outside key antenna signal (-)
OUTSIDE KEY ANTENNA (REAR BUMPER)
84 Instrument center inside key antenna signal (+)
85 Instrument center inside key antenna signal (-)
INSIDE KEY ANTENNA (INSTRUMENT CENTER)
86 Console inside key antenna signal (+)
87 Console inside key antenna signal (-)
INSIDE KEY ANTENNA (CONSOLE)
88 Luggage room inside key antenna signal (+)
89 Luggage room inside key antenna signal (-)
INSIDE KEY ANTENNA (LUGGAGE ROOM)
47 Door switch signal
FRONT DOOR SWITCH (DRIVER SIDE)
45 Door switch signal
FRONT DOOR SWITCH (PASSENGER SIDE)
48 Door switch signal
SLIDING DOOR SWITCH LH
46 Door switch signal
SLIDING DOOR SWITCH RH
43 Back door switch signal
BACK DOOR LOCK ASSEMBLY (BACK DOOR SWITCH)
51 Back door request switch signal
30 Back door opener switch signal
REQUEST SWITCH
OPENER SWITCH
BACK DOOR OPENER SWITCH ASSEMBLY
BCM
(BLACK)
(BLACK)
(WHITE)
JMKIA8243GB

MODELS WITH AUTOMATIC SLIDE DOOR

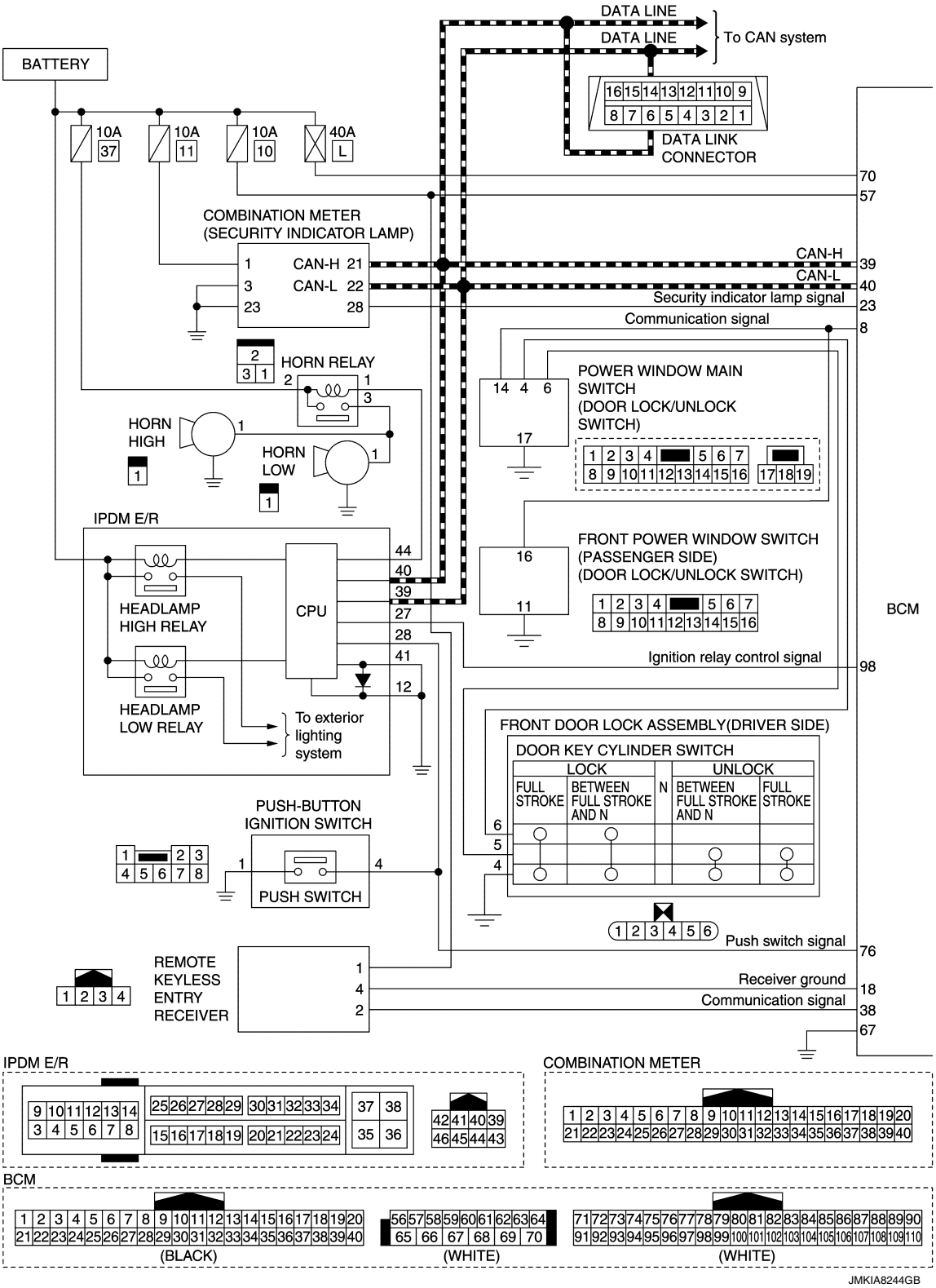

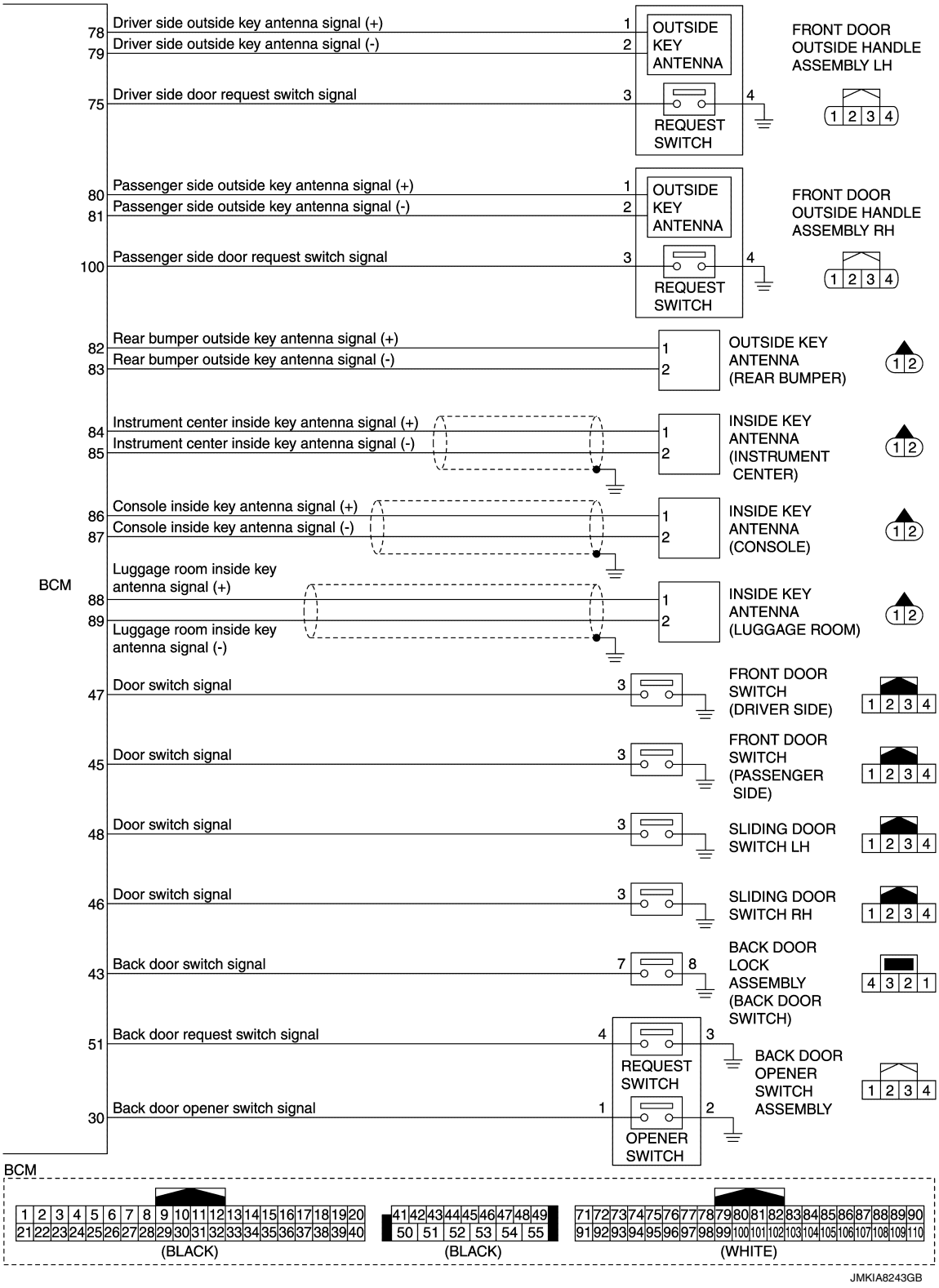
BCM
78 Driver side outside key antenna signal (+)
79 Driver side outside key antenna signal (-)
75 Driver side door request switch signal
OUTSIDE KEY ANTENNA
REQUEST SWITCH
FRONT DOOR OUTSIDE HANDLE ASSEMBLY LH
80 Passenger side outside key antenna signal (+)
81 Passenger side outside key antenna signal (-)
100 Passenger side door request switch signal
FRONT DOOR OUTSIDE HANDLE ASSEMBLY RH
82 Rear bumper outside key antenna signal (+)
83 Rear bumper outside key antenna signal (-)
OUTSIDE KEY ANTENNA (REAR BUMPER)
84 Instrument center inside key antenna signal (+)
85 Instrument center inside key antenna signal (-)
INSIDE KEY ANTENNA (INSTRUMENT CENTER)
86 Console inside key antenna signal (+)
87 Console inside key antenna signal (-)
INSIDE KEY ANTENNA (CONSOLE)
88 Luggage room inside key antenna signal (+)
89 Luggage room inside key antenna signal (-)
INSIDE KEY ANTENNA (LUGGAGE ROOM)
47 Door switch signal
FRONT DOOR SWITCH (DRIVER SIDE)
45 Door switch signal
FRONT DOOR SWITCH (PASSENGER SIDE)
48 Door switch signal
SLIDING DOOR SWITCH LH
46 Door switch signal
SLIDING DOOR SWITCH RH
43 Back door switch signal
BACK DOOR LOCK ASSEMBLY (BACK DOOR SWITCH)
51 Back door request switch signal
30 Back door opener switch signal
REQUEST SWITCH
OPENER SWITCH
BACK DOOR OPENER SWITCH ASSEMBLY
BCM
(BLACK)
(BLACK)
(WHITE)
JMKIA8243GB

DIAGNOSIS SYSTEM (BCM)
COMMON ITEM
COMMON ITEM : CONSULT Function (BCM - COMMON ITEM)

INFOID:0000000013023609

APPLICATION ITEM
CONSULT performs the following functions via CAN communication with BCM.

Diagnosis mode	Function Description
Work Support	Changes the setting for each system function.
Self Diagnostic Result	Displays the diagnosis results judged by BCM.
CAN Diag Support Monitor	Monitors the reception status of CAN communication viewed from BCM.
Data Monitor	The BCM input/output signals are displayed.
Active Test	The signals used to activate each device are forcibly supplied from BCM.
Ecu Identification	The BCM part number is displayed.
Configuration	• Read and save the vehicle specification. • Write the vehicle specification when replacing BCM.

SYSTEM APPLICATION
BCM can perform the following functions for each system.
NOTE:
It can perform the diagnosis modes except the following for all sub system selection items.

×: Applicable item

System	Sub system selection item	Diagnosis mode		
		Work Support	Data Monitor	Active Test
Door lock	DOOR LOCK	×	×	×
Rear window defogger	REAR DEFOGGER		×	×
Warning chime	BUZZER		×	×
Interior room lamp control system	INT LAMP	×	×	×
Exterior lamp	HEAD LAMP	×	×	×
Wiper and washer	WIPER	×	×	×
Turn signal and hazard warning lamps	FLASHER	×	×	×
Air conditioning control system	AIR CONDITONER		×	×*
• Intelligent Key system • Engine start system	INTELLIGENT KEY	×	×	×
Combination switch	COMB SW		×	
Body control system	BCM	×		
NVIS	IMMU	×	×	×
Interior room lamp battery saver	BATTERY SAVER	×	×	×
Back door open	TRUNK		×	
Vehicle security system	THEFT ALM	×	×	×
RAP system	RETAINED PWR		×	
Signal buffer system	SIGNAL BUFFER		×	×
TPMS	AIR PRESSURE MONITOR	×	×	×

NOTE:

*: For models with automatic air conditioning control system, this diagnosis mode is not used.

FREEZE FRAME DATA (FFD)
The BCM records the following vehicle condition at the time a particular DTC is detected, and displays on CONSULT.

CONSULT screen item	Indication/Unit	Description	
Vehicle Speed	km/h	Vehicle speed of the moment a particular DTC is detected	
Odo/Trip Meter	km	Total mileage (Odometer value) of the moment a particular DTC is detected	
Vehicle Condition	SLEEP>LOCK	Power position status of the moment a particular DTC is detected*	While turning BCM status from low power consumption mode to normal mode [Power supply position is OFF (LOCK)]
	SLEEP>OFF		While turning BCM status from low power consumption mode to normal mode [Power supply position is OFF (OFF)]
	LOCK>ACC		While turning power supply position from OFF (LOCK) to ACC
	ACC>ON		While turning power supply position from ACC to ON
	RUN>ACC		While turning power supply position from RUN to ACC (Except emergency stop operation)
	CRANK>RUN		While turning power supply position from CRANK to RUN
	RUN>URGENT		While turning power supply position from RUN to ACC (Emergency stop operation)
	ACC>OFF		While turning power supply position from ACC to OFF (OFF)
	OFF>LOCK		While turning power supply position from OFF (OFF) to OFF (LOCK)
	OFF>ACC		While turning power supply position from OFF (OFF) to ACC
	ON>CRANK		While turning power supply position from ON to CRANK
	OFF>SLEEP		While turning BCM status from normal mode [Power supply position is OFF (OFF)] to low power consumption mode
	LOCK>SLEEP		While turning BCM status from normal mode [Power supply position is OFF (LOCK)] to low power consumption mode
	LOCK		Power supply position is OFF (LOCK)
	OFF		Power supply position is OFF (OFF)
	ACC		Power supply position is ACC
	ON		Power supply position is ON
	ENGINE RUN		Power supply position is RUN
	CRANKING		Power supply position is CRANK
IGN Counter	0 - 39	The number of times that ignition switch is turned ON after DTC is detected • The number is 0 when a malfunction is detected now. • The number increases like 1 → 2 → 3...38 → 39 after returning to the normal condition whenever ignition switch OFF → ON. • The number is fixed to 39 until the self-diagnosis results are erased if it is over 39.	

NOTE:

*: Refer to the following for details of the power supply position.

- OFF (OFF, LOCK): Ignition switch OFF
- ACC: Ignition switch ACC
- IGN: Ignition switch ON with engine stopped
- RUN: Ignition switch ON with engine running
- CRANK: At engine cranking

Power supply position shifts to “OFF (LOCK)” from “OFF (OFF)”, when ignition switch is in the OFF position, shift position is in the P position, and any of the following conditions are met.

- Closing door
- Opening door
- Door is locked using door request switch
- Door is locked using Intelligent Key

The power supply position shifts to “ACC” when the push-button ignition switch (push switch) is pushed at “OFF (LOCK)”.

INTELLIGENT KEY

INTELLIGENT KEY : CONSULT Function (BCM - INTELLIGENT KEY)

INFOID:0000000013023608

WORK SUPPORT

Monitor item	Description
INSIDE ANT DIAGNOSIS	This function allows inside key antenna self-diagnosis
LOCK/UNLOCK BY I-KEY	Door lock/unlock function by door request switch mode can be changed to operation in this mode • On: Operate • Off: Non-operation
ENGINE START BY I-KEY	Engine start function mode can be changed to operation with this mode • On: Operate • Off: Non-operation
TRUNK/GLASS HATCH OPEN	**NOTE:** This item is displayed, but cannot be used
PANIC ALARM SET	Panic alarm button pressing time on Intelligent Key button can be selected from the following with this mode • MODE 1: 0.5 sec • MODE 2: Non-operation • MODE 3: 1.5 sec
TRUNK OPEN DELAY	**NOTE:** This item is displayed, but cannot be used
LO- BATT OF KEY FOB WARN	Intelligent Key low battery warning mode can be changed to operation with this mode • On: Operate • Off: Non-operation
ANTI KEY LOCK IN FUNCTI	Key reminder function mode can be changed to operation with this mode • On: Operate • Off: Non-operation
HAZARD ANSWER BACK	Hazard reminder function mode by door request switch and Intelligent Key button can be selected from the following with this mode • Lock Only: Door lock operation only • Unlock Only: Door unlock operation only • Lock/Unlock: Lock and unlock operation • Off: Non-operation
ANS BACK I-KEY LOCK	Buzzer reminder function (lock operation) mode by door request switch can be selected from the following with this mode • Horn Chirp: Sound horn • Buzzer: Sound Intelligent Key warning buzzer • Off: Non-operation
ANS BACK I-KEY UNLOCK	Buzzer reminder function (unlock operation) mode by door request switch can be changed to operation with this mode • On: Operate • Off: Non-operation
SHORT CRANKING OUTPUT	Starter motor can operate during the times below • 70 msec • 100 msec • 200 msec
CONFIRM KEY FOB ID	It can be checked whether Intelligent Key ID code is registered or not in this mode
AUTO LOCK SET	Auto door lock operation time can be changed in this mode • MODE 1: OFF • MODE 2: 30 sec • MODE 3: 1 minute • MODE 4: 2 minutes • MODE 5: 3 minutes • MODE 6: 4 minutes • MODE 7: 5 minutes

Monitor item	Description
HORN WITH KEYLESS LOCK	Horn reminder function mode by Intelligent Key button can be selected from the following with this mode • On: Operate • Off: Non-operation
PW DOWN SET	Unlock button pressing time on Intelligent Key button can be selected from the following with this mode • MODE 1: 3 sec • MODE 2: Non-operation • MODE 3: 5 sec

SELF-DIAG RESULT

Refer to BCS-64, "DTC Index".

DATA MONITOR

NOTE:
The following table includes information (items) inapplicable to this vehicle. For information (items) applicable to this vehicle, refer to CONSULT display items.

Monitor Item	Condition
REQ SW -DR	Indicates [On/Off] condition of door request switch (driver side)
REQ SW -AS	Indicates [On/Off] condition of door request switch (passenger side)
REQ SW -BD/TR	Indicates [On/Off] condition of back door request switch
PUSH SW	Indicates [On/Off] condition of push-button ignition switch
CLUTCH SW	**NOTE:** This item is displayed, but cannot be monitored
BRAKE SW 1	Indicates [On/Off]* condition of stop lamp switch power supply
BRAKE SW 2	Indicates [On/Off] condition of stop lamp switch
DETE/CANCL SW	Indicates [On/Off] condition of P position
SFT PN/N SW	Indicates [On/Off] condition of P or N position
S/L -LOCK	**NOTE:** This item is displayed, but cannot be monitored
S/L -UNLOCK	**NOTE:** This item is displayed, but cannot be monitored
S/L RELAY -F/B	**NOTE:** This item is displayed, but cannot be monitored
UNLK SEN -DR	Indicates [On/Off] condition of driver door UNLOCK status
PUSH SW -IPDM	Indicates [On/Off] condition of push-button ignition switch
IGN RLY1 -F/B	Indicates [On/Off] condition of ignition relay 1
DETE SW -IPDM	Indicates [On/Off] condition of P position
SFT PN -IPDM	Indicates [On/Off] condition of P or N position
SFT P -MET	Indicates [On/Off] condition of P position
SFT N -MET	Indicates [On/Off] condition of N position
ENGINE STATE	Indicates [Stop/Stall/Crank/Run] condition of engine states
S/L LOCK-IPDM	**NOTE:** This item is displayed, but cannot be monitored
S/L UNLK-IPDM	**NOTE:** This item is displayed, but cannot be monitored
S/L RELAY-REQ	**NOTE:** This item is displayed, but cannot be monitored
VEH SPEED 1	Display the vehicle speed signal received from combination meter by numerical value [km/h]
VEH SPEED 2	Display the vehicle speed signal received from ABS or VDC or TCM by numerical value [km/h]
DOOR STAT-DR	Indicates [LOCK/READY/UNLK] condition of unlock sensor

Monitor Item	Condition
DOOR STAT-AS	Indicates [LOCK/READY/UNLK] condition of passenger side door status
ID OK FLAG	Indicates [Set/Reset] condition of key ID
PRMT ENG STRT	Indicates [Set/Reset] condition of engine start possibility
PRMT RKE STRT	**NOTE:** This item is displayed, but cannot be monitored
TRNK/HAT MNTR	**NOTE:** This item is displayed, but cannot be monitored
RKE-LOCK	Indicates [On/Off] condition of LOCK signal from Intelligent Key
RKE-UNLOCK	Indicates [On/Off] condition of UNLOCK signal from Intelligent Key
RKE-TR/BD	**NOTE:** This item is displayed, but cannot be monitored
RKE-PANIC	Indicates [On/Off] condition of PANIC button of Intelligent Key
RKE-MODE CHG	Indicates [On/Off] condition of MODE CHANGE signal from Intelligent Key
RKE OPE COUN1	When remote keyless entry receiver receives the signal transmitted while operating on Intelligent Key, the numerical value start changing
RKE OPE COUN2	**NOTE:** This item is displayed, but cannot be monitored

*: OFF is displayed when brake pedal is depressed while brake switch power supply is OFF.

ACTIVE TEST

Test item	Description
BATTERY SAVER	This test is able to check interior room lamp operation • On: Operate • Off: Non-operation
OUTSIDE BUZZER	This test is able to check Intelligent Key warning buzzer operation • On: Operate • Off: Non-operation
INSIDE BUZZER	This test is able to check warning chime in combination meter operation • Take Out: Take away warning chime sounds when CONSULT screen is touched • Key: Key warning chime sounds when CONSULT screen is touched • Knob: OFF position warning chime sounds when CONSULT screen is touched • Off: Non-operation
INDICATOR	This test is able to check warning lamp operation • KEY ON: “KEY” Warning lamp illuminates when CONSULT screen is touched • KEY IND: “KEY” Warning lamp blinks when CONSULT screen is touched • Off: Non-operation
INT LAMP	This test is able to check interior room lamp operation • On: Operate • Off: Non-operation
LCD	This test is able to check meter display information • Engine start information displays when “BP N” on CONSULT screen is touched • Engine start information displays when “BP I” on CONSULT screen is touched • Key ID warning displays when “ID NG” on CONSULT screen is touched • ROTAT: This item is displayed, but cannot be used. • P position warning displays when “SFT P” on CONSULT screen is touched • INSRT: This item is displayed, but cannot be monitored • BATT: This item is displayed, but cannot be monitored • Take away through window warning displays when “NO KY” on CONSULT screen is touched • Take away warning display when “OUTKEY” on CONSULT screen is touched • OFF position warning display when “LK WN” on CONSULT screen is touched
FLASHER	This test is able to check hazard warning lamp operation • LH: LH side hazard warning lamps operate • RH: RH side hazard warning lamps operate • Off: Non-operation

Test item	Description
P RANGE	This test is able to check CVT shift selector power supply • On: Operate • Off: Non-operation
ENGINE SW ILLUMI	This test is able to check push-button ignition switch illumination operation • On: Operate • Off: Non-operation
LOCK INDICATOR	This test is able to check LOCK indicator (push-button ignition switch) operation • On: Operate • Off: Non-operation
ACC INDICATOR	This test is able to check ACC indicator (push-button ignition switch) operation • On: Operate • Off: Non-operation
IGNITION ON IND	This test is able to check ON indicator (push-button ignition switch) operation • On: Operate • Off: Non-operation
HORN	This test is able to check horn operation • On: Operate • Off: Non-operation
TRUNK/BACK DOOR	**NOTE:** This item is displayed, but cannot be used
POWER SLIDE DOOR	This test is able to check automatic siding door operation • RR PSD ON: Auto open/close operate • RL PSD ON: Auto open/close operate

THEFT ALM

THEFT ALM : CONSULT Function (BCM - THEFT)

INFOID:0000000012406079

WORK SUPPORT

Service Item	Description
SECURITY ALARM SET	This mode is able to confirm and change security alarm ON-OFF setting.
THEFT ALM TRG	The switch which triggered vehicle security alarm is recorded. This mode is able to confirm and erase the record of vehicle security alarm. The trigger data can be erased by touching “CLEAR” on CONSULT screen.

DATA MONITOR

NOTE:

The following table includes information (items) inapplicable to this vehicle. For information (items) applicable to this vehicle, refer to CONSULT display items.

Monitored Item	Description
REQ SW -DR	Indicates [ON/OFF] condition of door request switch (driver side).
REQ SW -AS	Indicates [ON/OFF] condition of door request switch (passenger side).
REQ SW -RR	**NOTE:** This is displayed even when it is not equipped.
REQ SW -RL	**NOTE:** This is displayed even when it is not equipped.
REQ SW -BD/TR	Indicates [ON/OFF] condition of back door request switch.
PUSH SW	Indicates [ON/OFF] condition of push-button ignition switch
UNLK SEN -DR	Indicates [ON/OFF] condition of driver door UNLOCK status.
DOOR SW-DR	Indicates [ON/OFF] condition of front door switch (driver side).
DOOR SW-AS	Indicates [ON/OFF] condition of front door switch (passenger side).
DOOR SW-RR	Indicates [ON/OFF] condition of rear door switch RH.

Monitored Item	Description
DOOR SW-RL	Indicates [ON/OFF] condition of rear door switch LH.
DOOR SW-BK	Indicates [ON/OFF] condition of back door switch.
CDL LOCK SW	Indicates [ON/OFF] condition of lock signal from door lock/unlock switch.
CDL UNLOCK SW	Indicates [ON/OFF] condition of unlock signal from door lock/unlock switch.
KEY CYL LK-SW	Indicates [ON/OFF] condition of lock signal from door key cylinder.
KEY CYL UN-SW	Indicates [ON/OFF] condition of unlock signal from door key cylinder.
TR/BD OPEN SW	Indicates [ON/OFF] condition of back door opener switch.
TRNK/HAT MNTR	**NOTE:** This is displayed even when it is not equipped.
RKE-LOCK	Indicates [ON/OFF] condition of LOCK signal from Intelligent Key.
RKE-UNLOCK	Indicates [ON/OFF] condition of UNLOCK signal from Intelligent Key.
RKE-TR/BD	**NOTE:** This is displayed even when it is not equipped.

ACTIVE TEST

Test Item	Description
THEFT IND	This test is able to check security indicator lamp operation. Security indicator lamp is turned on when “ON” on CONSULT screen is touched.
VEHICLE SECURITY HORN	This test is able to check horns operation. Horns are activated for 0.5 seconds after “ON” on CONSULT screen is touched.
HEADLAMP(HI)	This test is able to check headlamp operation. Headlamps are activated for 0.5 seconds after “ON” on CONSULT screen is touched.
FLASHER	This test is able to check hazard warning lamp operation. Hazard warning lamps are activated after “ON” on CONSULT screen is touched.

IMMU

IMMU : CONSULT Function (BCM - IMMU)

INFOID:0000000012406080

WORK SUPPORT

Service item	Description
CONFIRM DONGLE ID	It is possible to check that dongle unit is applied to the vehicle.

DATA MONITOR

NOTE:

The following table includes information (items) inapplicable to this vehicle. For information (items) applicable to this vehicle, refer to CONSULT display items.

Monitor item	Content
CONFRM ID ALL	Indicates [YET] at all time. Switches to [DONE] when a registered Intelligent Key backside is contacted to push-button ignition switch.
CONFIRM ID4	
CONFIRM ID3	
CONFIRM ID2	
CONFIRM ID1	
NOT REGISTERED	Indicates [ID OK] when key ID that is registered is received or is not yet received. Indicates [ID NG] when key ID that is not registered is received.

Monitor item	Content
TP 4	Indicates the number of IDs that are registered.
TP 3	
TP 2	
TP 1	
PUSH SW	Indicates [ON/OFF] condition of push-button ignition switch.

ACTIVE TEST

Test item	Description
THEFT IND	This test is able to check security indicator lamp operation. Security indicator lamp is turned on when “ON” on CONSULT screen is touched.

DIAGNOSIS SYSTEM (IPDM E/R)

CONSULT Function (IPDM E/R)

INFOID:0000000013023610

APPLICATION ITEM

CONSULT performs the following functions via CAN communication with IPDM E/R.

Diagnosis mode	Description
Ecu Identification	Allows confirmation of IPDM E/R part number.
Self Diagnostic Result	Displays the diagnosis results judged by IPDM E/R.
Data Monitor	Displays the real-time input/output data from IPDM E/R input/output data.
Active Test	IPDM E/R can provide a drive signal to electronic components to check their operations.
CAN Diag Support Monitor	The results of transmit/receive diagnosis of CAN communication can be read.

SELF DIAGNOSTIC RESULT

Refer to PCS-23, "DTC Index".

DATA MONITOR

NOTE:

The following table includes information (items) inapplicable to this vehicle. For information (items) applicable to this vehicle, refer to CONSULT display items.

Monitor Item [Unit]	MAIN SIGNALS	Description
MOTOR FAN REQ [1/2/3/4]	×	Displays the value of the cooling fan speed signal received from ECM via CAN communication.
AC COMP REQ [Off/On]	×	Displays the status of the A/C compressor request signal received from ECM via CAN communication.
TAIL&CLR REQ [Off/On]	×	Displays the status of the position light request signal received from BCM via CAN communication.
HL LO REQ [Off/On]	×	Displays the status of the low beam request signal received from BCM via CAN communication.
HL HI REQ [Off/On]	×	Displays the status of the high beam request signal received from BCM via CAN communication.
FR FOG REQ [Off/On]	×	Displays the status of the front fog light request signal received from BCM via CAN communication.
FR WIP REQ [Stop/1LOW/Low/Hi]	×	Displays the status of the front wiper request signal received from BCM via CAN communication.
WIP AUTO STOP [STOP P/ACT P]	×	Displays the status of the front wiper stop position signal judged by IPDM E/R.
WIP PROT [Off/BLOCK]	×	Displays the status of the front wiper fail-safe operation judged by IPDM E/R.
IGN RLY1 -REQ [Off/On]		Displays the status of the ignition switch ON signal received from BCM via CAN communication.
IGN RLY [Off/On]	×	Displays the status of the ignition relay judged by IPDM E/R.
PUSH SW [Off/On]		Displays the status of the push-button ignition switch judged by IPDM E/R.
INTER/NP SW [Off/On]		Displays the status of the shift position judged by IPDM E/R.
ST RLY CONT [Off/On]		Displays the status of the starter relay status signal received from BCM via CAN communication.
IHBT RLY -REQ [Off/On]		Displays the status of the starter control relay signal received from BCM via CAN communication.

Monitor Item [Unit]	MAIN SIGNALS	Description
ST/INHI RLY [Off/ ST /INHI/UNKWN]		Displays the status of the starter relay and starter control relay judged by IPDM E/R.
DETENT SW [Off/On]		Displays the status of the CVT shift selector (detention switch) judged by IPDM E/R.
S/L RLY -REQ [Off/On]		**NOTE:** The item is indicated, but not monitored.
S/L STATE [LOCK/UNLK/UNKWN]		**NOTE:** The item is indicated, but not monitored.
DTRL REQ [Off/On]		**NOTE:** The item is indicated, but not monitored.
OIL P SW [Open/Close]		**NOTE:** The item is indicated, but not monitored.
HOOD SW [Off/On]		**NOTE:** The item is indicated, but not monitored.
HL WASHER REQ [Off/On]		**NOTE:** The item is indicated, but not monitored.
THFT HRN REQ [Off/On]		Displays the status of the theft warning horn request signal received from BCM via CAN communication.
HORN CHIRP [Off/On]		Displays the status of the horn reminder signal received from BCM via CAN communication.
CRNRNG LMP REQ [Off/On]		**NOTE:** The item is indicated, but not monitored.

ACTIVE TEST

Test item

Test item	Operation	Description
CORNERING LAMP	Off	**NOTE:** The item is indicated, but cannot be tested.
	LH	
	RH	
HORN	On	Operates horn relay for 20 ms.
FRONT WIPER	Off	OFF
	Lo	Operates the front wiper relay.
	Hi	Operates the front wiper relay and front wiper HI/LO relay.
MOTOR FAN	1	OFF
	2	Operates the cooling fan relay-1.
	3	Operates the cooling fan relay-2.
	4	Operates the cooling fan relay-2 and cooling fan relay-3.
HEAD LAMP WASHER	On	**NOTE:** The item is indicated, but cannot be tested.
EXTERNAL LAMPS	Off	OFF
	TAIL	Operates the tail lamp relay.
	Lo	Operates the headlamp low relay.
	Hi	Operates the headlamp low relay and ON/OFF the headlamp high relay at 1 second intervals.
	Fog	Operates the front fog lamp relay.

ECU DIAGNOSIS INFORMATION

ECM, IPDM E/R, BCM

List of ECU Reference

INFOID:0000000012406082

ECU		Reference
ECM	Reference Value	EC-83, "Reference Value"
	Fail-safe	EC-99, "Fail-safe"
	DTC Inspection Priority Chart	EC-101, "DTC Inspection Priority Chart"
	DTC Index	EC-103, "DTC Index"
IPDM E/R	Reference Value	PCS-15, "Reference Value"
	Fail-safe	PCS-22, "Fail-safe"
	DTC Index	PCS-23, "DTC Index"
BCM	Reference Value	BCS-41, "Reference Value"
	Fail-safe	BCS-63, "Fail-safe"
	DTC Inspection Priority Chart	BCS-63, "DTC Inspection Priority Chart"
	DTC Index	BCS-64, "DTC Index"

WIRING DIAGRAM

SECURITY CONTROL SYSTEM

Wiring Diagram

INFOID:0000000012406083

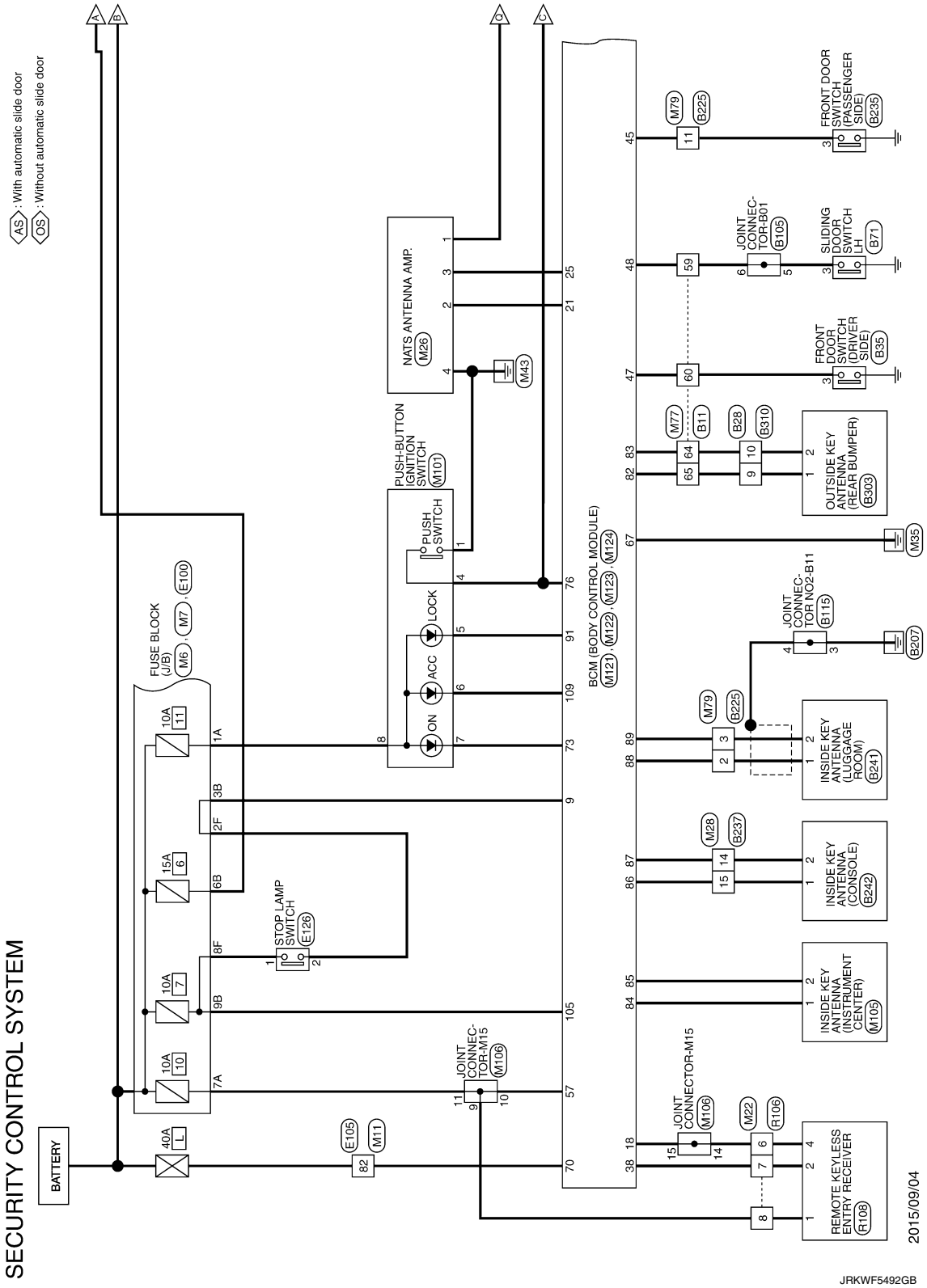

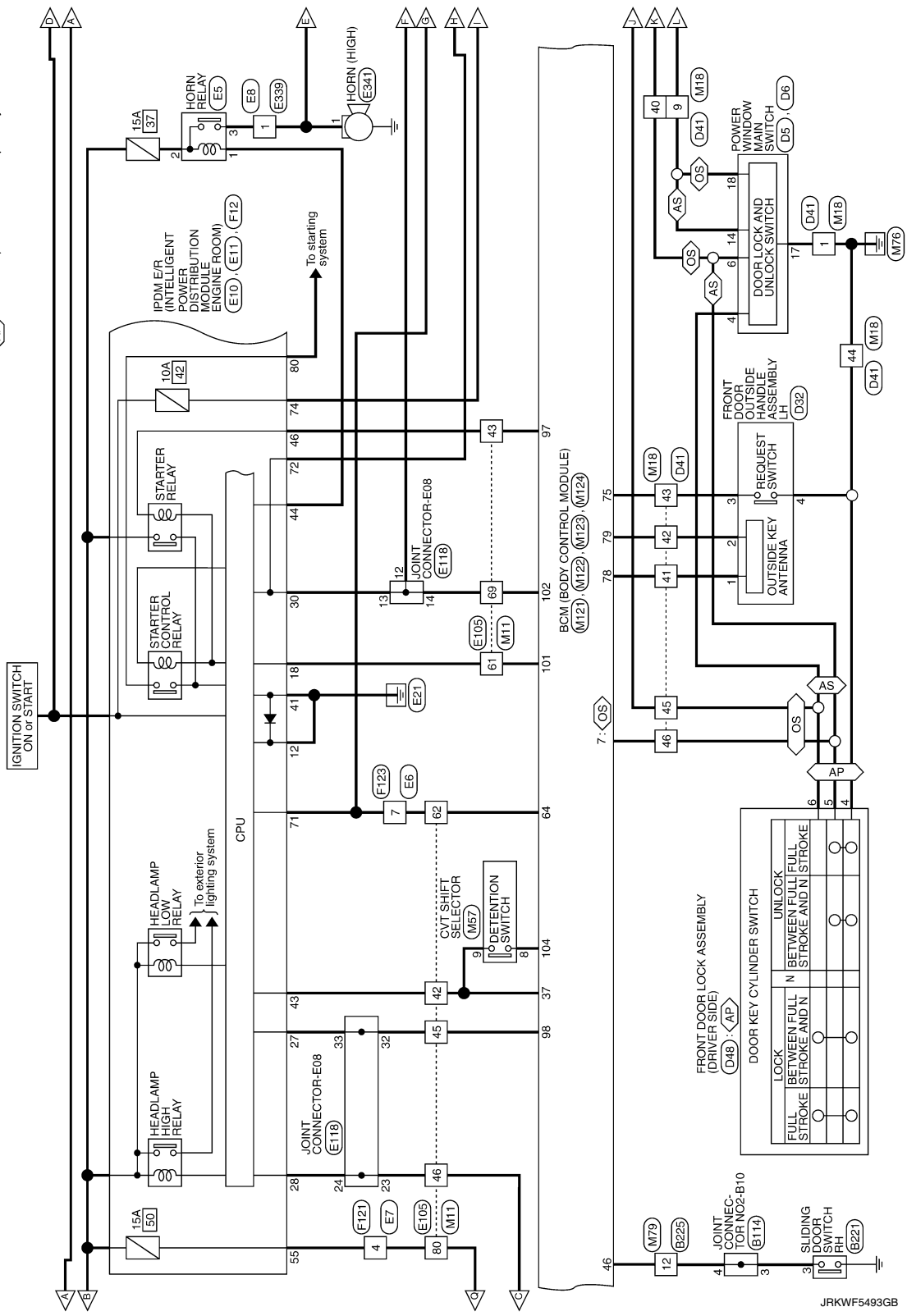
AP : With front power window anti-pinch system
IGNITION SWITCH ON or START
HORN RELAY
HORN (HIGH)
IPDM E/R (INTELLIGENT POWER DISTRIBUTION MODULE ENGINE ROOM)
To starting system
STARTER RELAY
STARTER CONTROL RELAY
CPU
HEADLAMP LOW RELAY
To exterior lighting system
HEADLAMP HIGH RELAY
JOINT CONNECTOR-E08
CVT SHIFT SELECTOR
DETENTION SWITCH
BCM (BODY CONTROL MODULE)
POWER WINDOW MAIN SWITCH
DOOR LOCK AND UNLOCK SWITCH
FRONT DOOR OUTSIDE HANDLE ASSEMBLY LH
REQUEST SWITCH
OUTSIDE KEY ANTENNA
FRONT DOOR LOCK ASSEMBLY (DRIVER SIDE)
DOOR KEY CYLINDER SWITCH
LOCK
UNLOCK
FULL STROKE
BETWEEN FULL STROKE AND N
JOINT CONNEC-TOR NO2-B10
SLIDING DOOR SWITCH RH
JRKWF5493GB

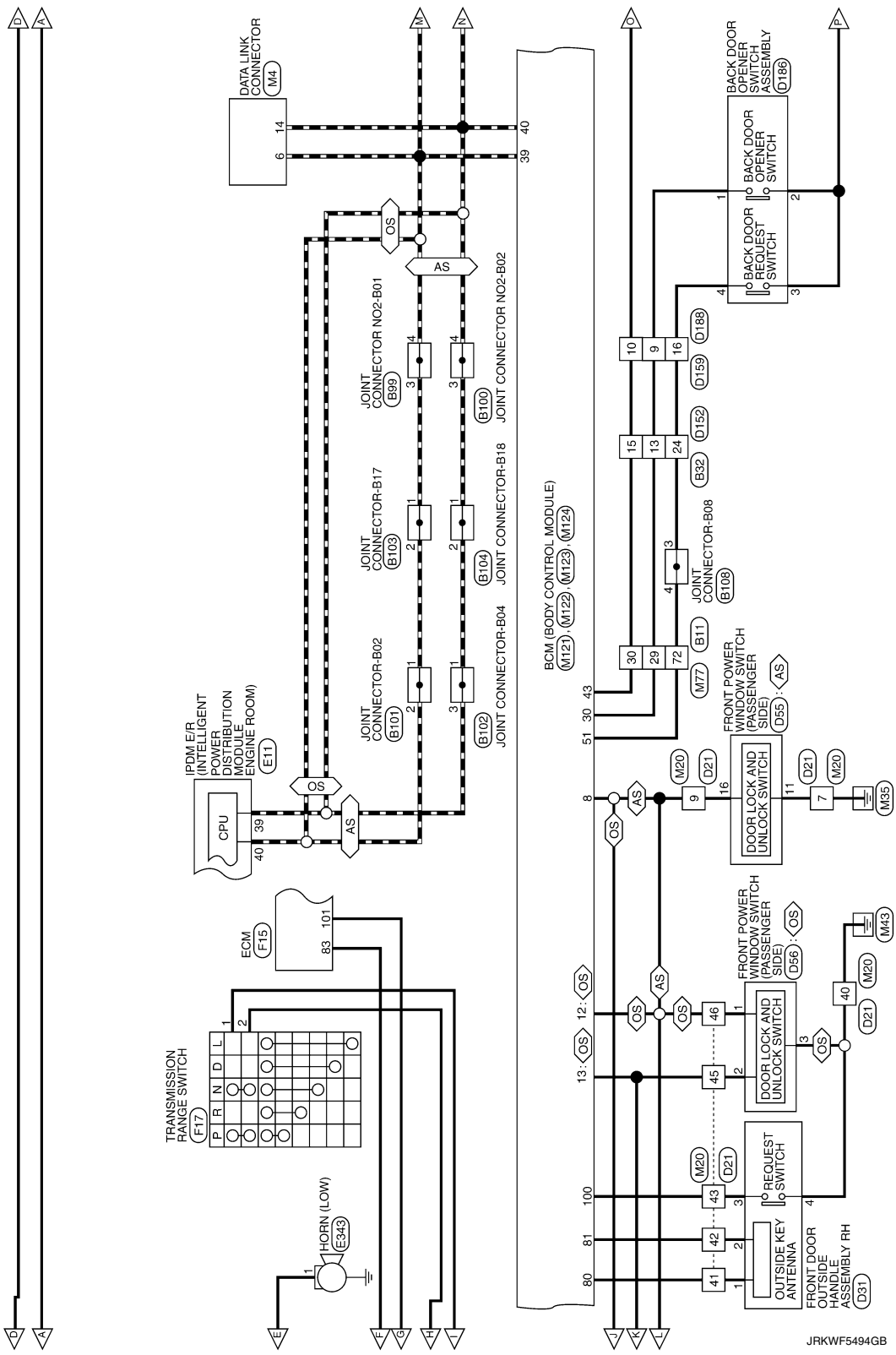
DATA LINK CONNECTOR M4
IPDM E/R (INTELLIGENT POWER DISTRIBUTION MODULE ENGINE ROOM) E11
CPU
JOINT CONNECTOR NO2-B01 B99
JOINT CONNECTOR NO2-B02 B100
JOINT CONNECTOR-B17 B103
JOINT CONNECTOR-B18 B104
JOINT CONNECTOR-B02 B101
JOINT CONNECTOR-B04 B102
BCM (BODY CONTROL MODULE) M121, M122, M123, M124
JOINT CONNECTOR-B08 B108
FRONT POWER WINDOW SWITCH (PASSENGER SIDE) D55
BACK DOOR OPENER SWITCH ASSEMBLY D186
BACK DOOR OPENER SWITCH
BACK DOOR REQUEST SWITCH
DOOR LOCK AND UNLOCK SWITCH
ECM F15
TRANSMISSION RANGE SWITCH F17
HORN (LOW) E343
REQUEST SWITCH
OUTSIDE KEY ANTENNA
FRONT DOOR OUTSIDE HANDLE ASSEMBLY RH D31
OS
AS
JRKWF5494GB

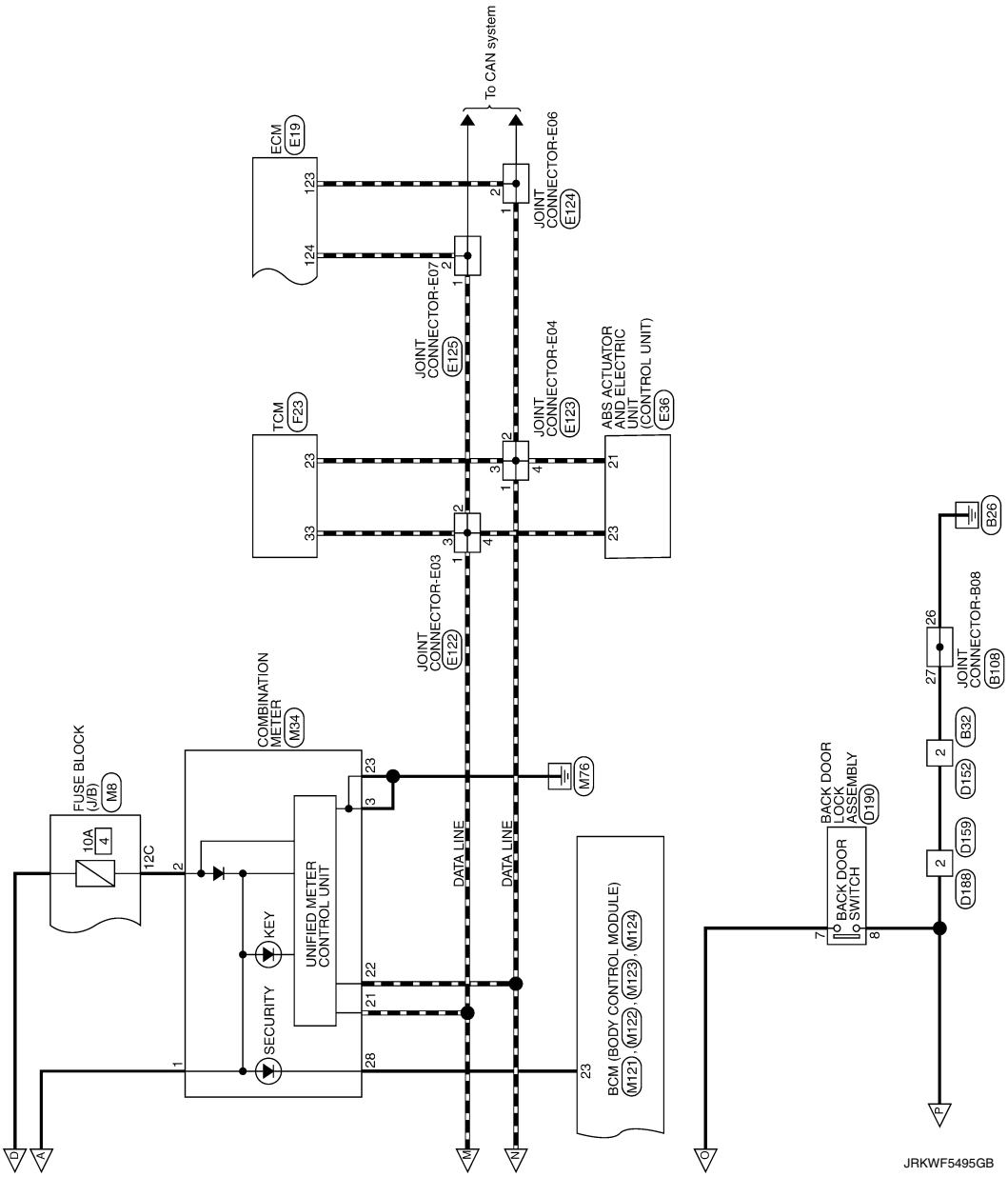
To CAN system
ECM E19
123
124
JOINT CONNECTOR-E06 E124
JOINT CONNECTOR-E07 E125
TCM F23
23
33
JOINT CONNECTOR-E04 E123
ABS ACTUATOR AND ELECTRIC UNIT (CONTROL UNIT) E36
21
23
JOINT CONNECTOR-E03 E122
COMBINATION METER M34
FUSE BLOCK (J/B) M8
10A 4
12C
UNIFIED METER CONTROL UNIT
KEY
SECURITY
DATA LINE
DATA LINE
M76
BCM (BODY CONTROL MODULE) M121, M122, M123, M124
BACK DOOR LOCK ASSEMBLY D190
BACK DOOR SWITCH
JOINT CONNECTOR-B08 B108
B26
B32
D152
D159
D188
D
A
M
N
O
P
JRKWF5495GB

SECURITY CONTROL SYSTEM

Connector No.	B11
Connector Name	WIRE TO WIRE
Connector Type	TH80MW-CS19

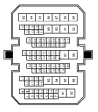

Terminal No.	Color Of Wire	Signal Name [Specification]
10	GR	-
12	G	-
13	P	-
15	L	-
29	GR	-
30	W	-
31	P	-
37	SHIELD	-
38	R	-
39	B	-
40	W	-
51	Y	-
52	B	-
53	G	-
54	P	-
55	L	-
57	Y	-
58	L	-
59	GR	-
60	Y	-
61	Y	-
62	BR	-
63	L	-
64	W	-
65	R	-
66	SHIELD	-
67	B	-
68	W	-
69	SHIELD	-
70	W/R	-
71	B/R	-
72	BR	-
74	L	-
75	SB	-
77	V	-
78	LG	-
79	GR	-
80	BR	-
81	SB	-
82	V	-
87	G	-
88	V	-
89	G	-
90	Y	-
91	LG	-
92	L	-

Connector No.	B28
Connector Name	WIRE TO WIRE
Connector Type	TH16FW-NH

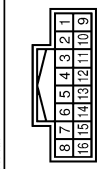

Terminal No.	Color Of Wire	Signal Name [Specification]
1	Y	-
2	W/R	-
3	B/R	-
4	SHIELD	-
5	B/W	-
6	L	-
7	Y	-
8	B/W	-
9	R	-
10	W	-
11	W	-
12	GR	-

Connector No.	B32
Connector Name	WIRE TO WIRE
Connector Type	TH24MW-NH

Terminal No.	Color Of Wire	Signal Name [Specification]
1	G	-
2	B	-
3	P	-
4	W	-
5	Y	-
6	B	-
9	SHIELD	-
10	R	-
11	B	-
12	W	-
13	GR	-
14	P	-
15	W	-
16	G	-
17	R	-
18	W	-
19	GR	-
20	P	-
21	W	-
22	P	-
23	G	-
24	BR	-

Connector No.	B35
Connector Name	FRONT DOOR SWITCH (DRIVER SIDE)
Connector Type	TH04FW-NH

Terminal No.	Color Of Wire	Signal Name [Specification]
3	Y	-

Connector No.	B71
Connector Name	SLIDING DOOR SWITCH LH
Connector Type	TH04FW-NH

Terminal No.	Color Of Wire	Signal Name [Specification]
3	GR	-

Connector No.	B99
Connector Name	JOINT CONNECTOR NO2-801
Connector Type	TK04FW-J

JRKWF5496GB

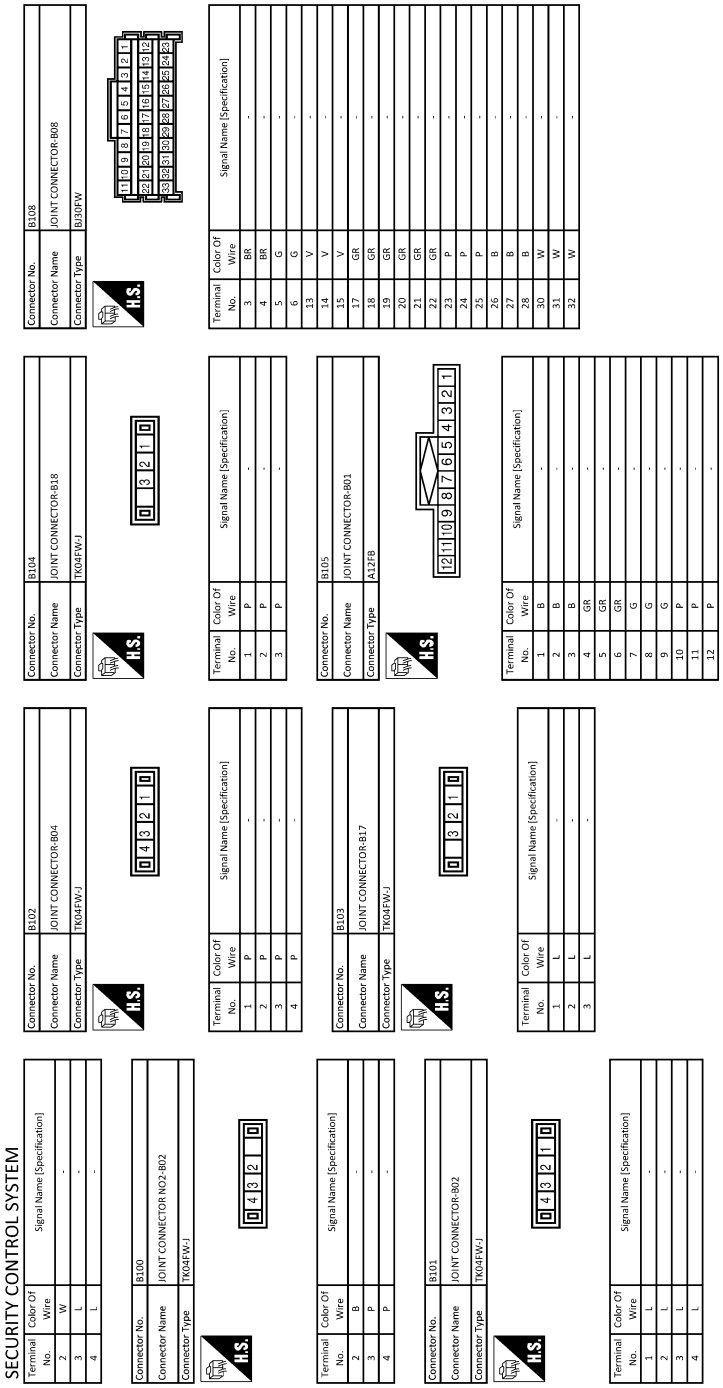

JRKWF5497GB

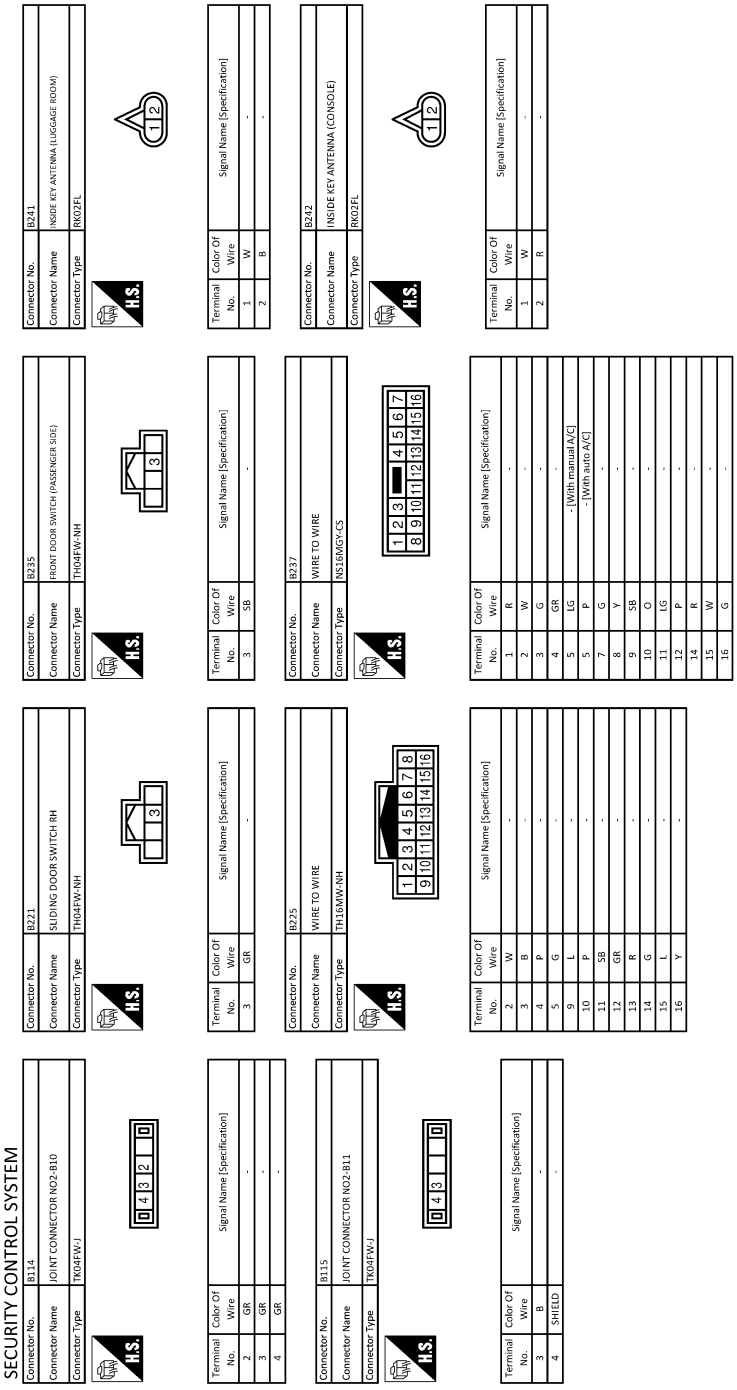

JRKWF5498GB

SECURITY CONTROL SYSTEM

Connector No.	B303
Connector Name	OUTSIDE KEY ANTENNA (REAR BUMPER)
Connector Type	RK02FL

H.S.

Terminal No.	Color Of Wire	Signal Name [Specification]
1	R	-
2	W	-

Connector No.	B310
Connector Name	WIRE TO WIRE
Connector Type	TH16MW-NH

H.S.

Terminal No.	Color Of Wire	Signal Name [Specification]
1	G	-
2	B	-
3	W	-
4	SHIELD	-
5	B	-
6	L	-
7	Y	-
8	B	-
9	R	-
10	W	-
11	P	-
12	LG	-

Connector No.	D5
Connector Name	POWER WINDOW MAIN SWITCH
Connector Type	NS16FW-CS

H.S.

Terminal No.	Color Of Wire	Signal Name [Specification]
1	Y	SLIDING DOOR POWER WINDOW MOTOR LH UP SIGNAL
2	P	ENCORDER GROUND
3	BR	SLIDING DOOR POWER WINDOW MOTOR LH DOWN SIGNAL
4	G	DOOR KEY CYLINDER SWITCH LOCK SIGNAL
5	SB	SLIDING DOOR POWER WINDOW MOTOR RH DOWN SIGNAL
6	GR	DOOR KEY CYLINDER SWITCH UNLOCK SIGNAL
7	V	SLIDING DOOR POWER WINDOW MOTOR RH UP SIGNAL
8	L	FRONT POWER WINDOW MOTOR (DRIVER SIDE) UP SIGNAL
9	W	ENCORDER SIGNAL 2
10	GR	RETAINED POWER SIGNAL
11	Y	FRONT POWER WINDOW MOTOR (DRIVER SIDE) DOWN SIGNAL
12	LG	-
13	GR	ENCORDER SIGNAL 1
14	R	POWER WINDOW SERIAL LINK
15	G	ENCORDER POWER SUPPLY
16	L	-

Connector No.	D6
Connector Name	POWER WINDOW MAIN SWITCH
Connector Type	NS03FW-CS

H.S.

Terminal No.	Color Of Wire	Signal Name [Specification]
17	B	GROUND
18	G	
19	Y	BATTERY POWER SUPPLY

Connector No.	D21
Connector Name	WIRE TO WIRE
Connector Type	TH40FW-CS15

H.S.

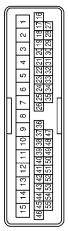

Terminal No.	Color Of Wire	Signal Name [Specification]
7	B	-
8	V	-
9	BR	- [With manual A/C]
9	W	- [With auto A/C]
10	LG	-
11	LG	-
12	BR	-
14	B	- [Without BOSE system]
14	R	- [With BOSE system]
15	L	- [Without BOSE system]
15	W	- [With BOSE system]
16	P	-
17	GR	-
18	R	-
19	W	-
21	R	-
22	B	-
23	W	-
24	SHIELD	-
25	Y	-
26	L	-
36	P	-
37	G	-
38	W	-
39	LG	-
40	B	-
41	GR	-
42	G	-
43	R	-
45	G	-
46	GR	-
50	W	-
51	R	-
52	G	-
53	SHIELD	-
54	B	-
55	W	-

Connector No.	D31
Connector Name	FRONT DOOR OUTSIDE HANDLE ASSEMBLY RH
Connector Type	RH04MB

H.S.

Terminal No.	Color Of Wire	Signal Name [Specification]
1	GR	-
2	G	-
3	R	-
4	B	-

Connector No.	D32
Connector Name	FRONT DOOR OUTSIDE HANDLE ASSEMBLY LH
Connector Type	RH04MB

H.S.

Terminal No.	Color Of Wire	Signal Name [Specification]
1	GR	-
2	G	-
3	R	-
4	B	-

JRKWF5499GB

SECURITY CONTROL SYSTEM

Connector No.	D41
Connector Name	WIRE TO WIRE
Connector Type	TH40FW-CS15

H.S.

15	14	13	12	11	10	9	8	7	6	5	4	3	2	1
40	39	38	37	36	35	34	33	32	31	30	29	28	27	26

Terminal No.	Color Of Wire	Signal Name [Specification]
1	B	-
2	V	-
3	SB	-
4	Y	-
5	BR	-
6	L	-
7	Y	-
8	GR	-
9	G	- [With manual A/C]
10	R	- [With auto A/C]
11	BR	-
12	LG	-
13	W	-
14	B	-
15	L	- [Without BOSE system]
16	W	- [With BOSE system]
17	G	-
18	R	-
19	G	-
20	P	-
21	W	-
22	GR	-
23	P	-
24	R	-
25	B	-
26	W	-
27	SHIELD	-
28	R	-
29	P	-
30	GR	-
31	P	-
32	W	-
33	G	-
34	P	-
35	G	-
36	P	-
37	G	-
38	W	-
39	LG	-
40	GR	-
41	GR	-
42	G	-
43	R	-
44	B	-
45	G	- [Without around view monitor]
45	Y	- [With around view monitor]
46	GR	- [Without around view monitor]
46	L	- [With around view monitor]
47	GR	-
48	B	-
49	R	-
50	G	- [With automatic drive positioner]
50	W	- [Without automatic drive positioner]
51	P	- [With automatic drive positioner]
51	R	- [Without automatic drive positioner]
52	G	- [Without automatic drive positioner]
52	W	- [With automatic drive positioner]
53	SHIELD	-
54	B	-
55	W	-

Connector No.	D48
Connector Name	FRONT DOOR LOCK ASSEMBLY (DRIVER SIDE)
Connector Type	E06FGY-RS

H.S.

1 2 3 4 5 6

Terminal No.	Color Of Wire	Signal Name [Specification]
1	BR	-
2	LG	-
3	W	-
4	B	-
5	GR	-
6	G	-

Connector No.	D55
Connector Name	FRONT POWER WINDOW SWITCH (PASSENGER SIDE)
Connector Type	NS16FW-CS

H.S.

		3	4			
8	9	10	11	12		15	16

Terminal No.	Color Of Wire	Signal Name [Specification]
3	GR	ENCORDER GROUND
4	G	ENCORDER POWER SUPPLY
8	L	FRONT POWER WINDOW MOTOR (PASSENGER SIDE) UP SIGNAL
9	LG	FRONT POWER WINDOW MOTOR (PASSENGER SIDE) DOWN SIGNAL
10	V	BATTERY POWER SUPPLY
11	B	GROUND
12	P	ENCORDER SIGNAL 1
15	R	ENCORDER SIGNAL 2
16	W	POWER WINDOW SERIAL LINK

Connector No.	D56
Connector Name	FRONT POWER WINDOW SWITCH (PASSENGER SIDE)
Connector Type	NS12FW-CS

H.S.

1	2		3	
6	7	8		11	12

Terminal No.	Color Of Wire	Signal Name [Specification]
1	GR	-
2	G	-
3	B	-
6	LG	-
7	L	-
8	V	-
11	LG	-
12	BR	-

Connector No.	D152
Connector Name	WIRE TO WIRE
Connector Type	TH24FW-NH

H.S.

12	11	10	9	8	7	6	5	4	3	2	1
24	23	22	21	20	19	18	17	16	15	14	13

Terminal No.	Color Of Wire	Signal Name [Specification]
1	SB	-
2	B	-
3	P	-
4	V	-
5	Y	-
6	LG	-
9	SHIELD	-
10	W	-
11	R	-
12	B	-
13	R	-
14	G	-
15	P	-
16	O	-
17	L	-
18	GR	-
19	BR	-
20	O	-
21	LG	-
22	V	-
23	W	-
24	V	-

JRKWF5500GB

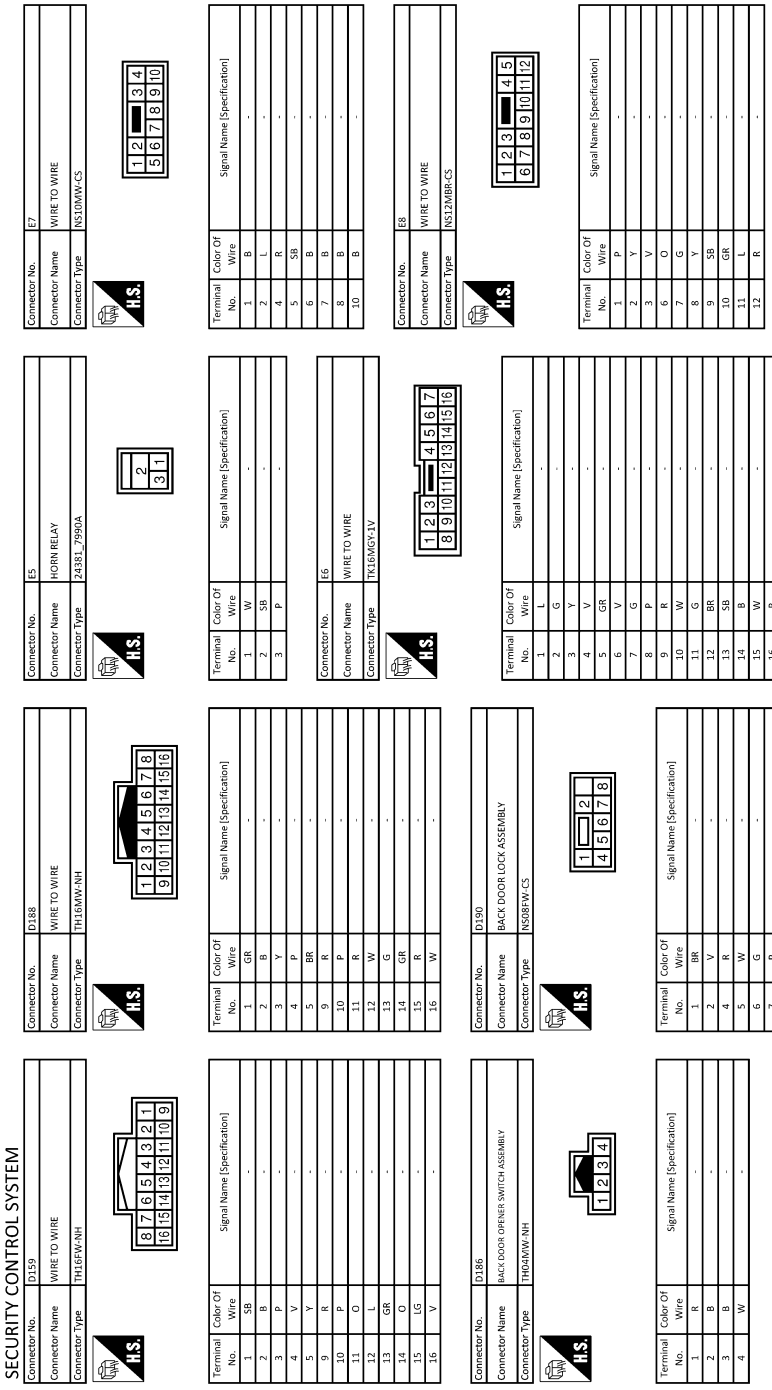

JRKWF5501GB

SECURITY CONTROL SYSTEM

Connector No.	E10
Connector Name	IPDM E/R (INTELLIGENT POWER DISTRIBUTION MODULE ENGINE ROOM)
Connector Type	TH20FW-CS12-M4-1V

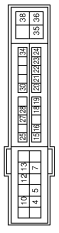

Terminal No.	Color Of Wire	Signal Name [Specification]
4	LG	-
5	Y	-
7	BR	-
10	P	-
12	B	-
13	G	-
15	L	-
16	R	-
18	P	-
19	V	-
20	W	-
21	O	-
22	SB	-
23	GR	-
24	G	-
25	GR	-
27	BR	-
28	G	-
30	LG	-
34	O	-
35	P	-
36	G	-
38	GR	-

Connector No.	E11
Connector Name	IPDM E/R (INTELLIGENT POWER DISTRIBUTION MODULE ENGINE ROOM)
Connector Type	TH08FW-NH

Terminal No.	Color Of Wire	Signal Name [Specification]
39	P	-
40	L	-
41	B	-
42	SB	-
43	LG	-
44	W	-
45	Y	-
46	O	-

Connector No.	E19
Connector Name	ECM
Connector Type	RH24FB-RZ8-L-LH

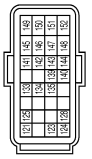

Terminal No.	Color Of Wire	Signal Name [Specification]
121	LG	EVAP CONTROL SYSTEM PRESSURE SENSOR
123	P	CAN COMMUNICATION LINE (CAN-L)
124	L	CAN COMMUNICATION LINE (CAN-H)
125	W	SENSOR POWER SUPPLY
128	Y	FUEL TANK TEMPERATURE SENSOR
133	BR	IGNITION SWITCH
134	Y	ASCD STEERING SWITCH
135	BR	SENSOR GROUND
139	SB	STOP LAMP SWITCH
140	BR	BRAKE PEDAL POSITION SWITCH
141	V	EVAP CANISTER VENT CONTROL VALVE
142	GR	SENSOR POWER SUPPLY
143	O	ACCELERATOR PEDAL POSITION SENSOR 2
144	G	SENSOR GROUND
145	L	POWER SUPPLY FOR ECM
146	P	SENSOR POWER SUPPLY
147	B	ECM GROUND
148	V	SENSOR GROUND
149	B	ECM GROUND
150	W	ACCELERATOR PEDAL POSITION SENSOR 1
151	B	SENSOR GROUND
152	B	ECM GROUND

Connector No.	E36
Connector Name	ABS ACTUATOR AND ELECTRIC UNIT (CONTROL UNIT)
Connector Type	AE22-FB-AZ24-LH

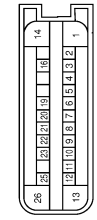

Terminal No.	Color Of Wire	Signal Name [Specification]
1	R	VALVE BATTERY
2	Y	RR LH WHEEL SENSOR SIGNAL
3	L	RR LH WHEEL SENSOR POWER SUPPLY
4	G	G SENSOR POWER SUPPLY
5	B	FR RH WHEEL SENSOR POWER SUPPLY
6	W	FR RH WHEEL SENSOR SIGNAL
7	V	BRAKE FLUID LEVEL SWITCH SIGNAL
8	LG	FR LH WHEEL SENSOR SIGNAL
9	L	FR LH WHEEL SENSOR POWER SUPPLY
10	B	G SENSOR GND
11	V	RR RH WHEEL SENSOR POWER SUPPLY
12	P	RR RH WHEEL SENSOR SIGNAL
13	B	GROUND
14	G	MOTOR BATTERY
16	SB	STOP LAMP SWITCH SIGNAL
19	Y	G SENSOR SIGNAL (+)
20	GR	IGN
21	P	CAN-L
22	BR	VDC OFF SWITCH SIGNAL
23	L	CAN-H
25	O	G SENSOR SIGNAL (-)
26	B	GROUND

Connector No.	E100
Connector Name	FUSE BLOCK (J/B)
Connector Type	NS16FW-CS

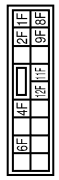

Terminal No.	Color Of Wire	Signal Name [Specification]
11F	G	-
12F	V	-
1F	SB	-
2F	R	-
4F	L	-
6F	LG	-
8F	P	-
9F	BR	-

Connector No.	E105
Connector Name	WIRE TO WIRE
Connector Type	TH70MW-CS10-M3

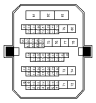

Terminal No.	Color Of Wire	Signal Name [Specification]
1	SHIELD	-
2	W	-
3	B	-
4	R	-
6	LG	-
7	R	-
8	GR	-
9	V	-
10	BR	-
11	Y	-
12	O	-
13	W	-

JRKWF5502GB

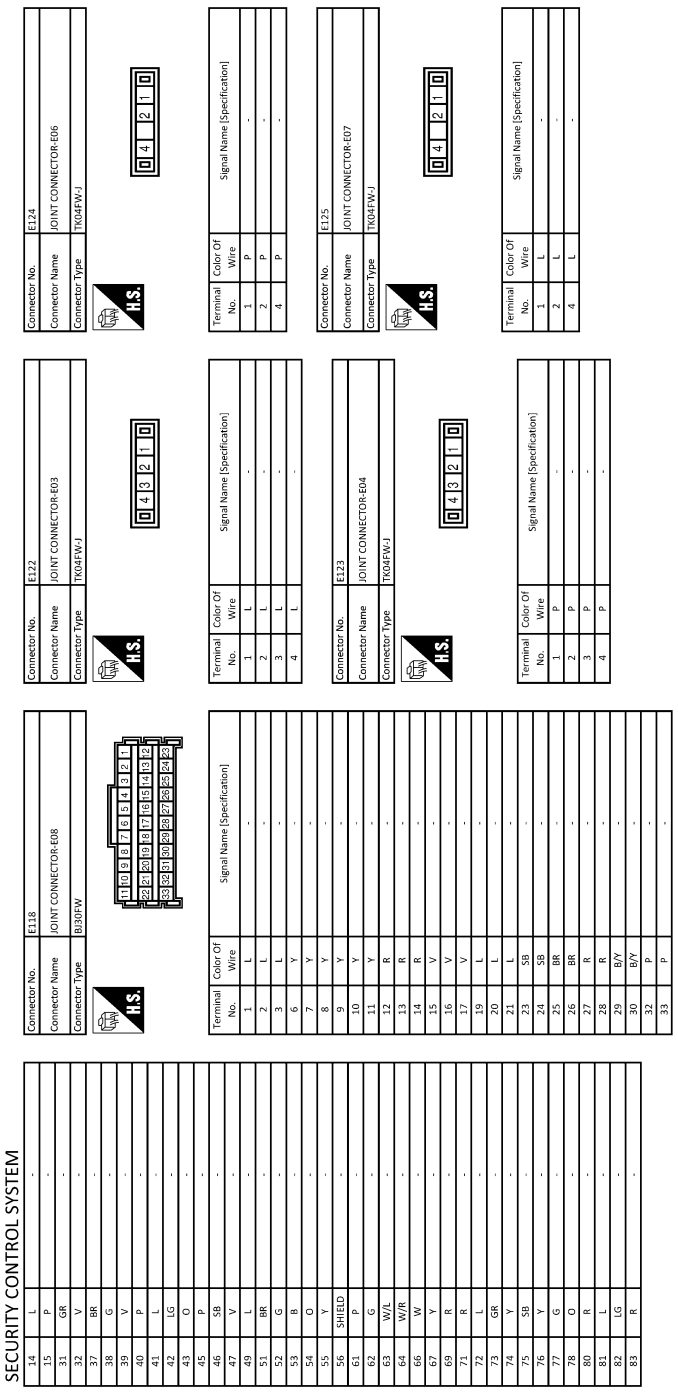

JRKWF5503GB

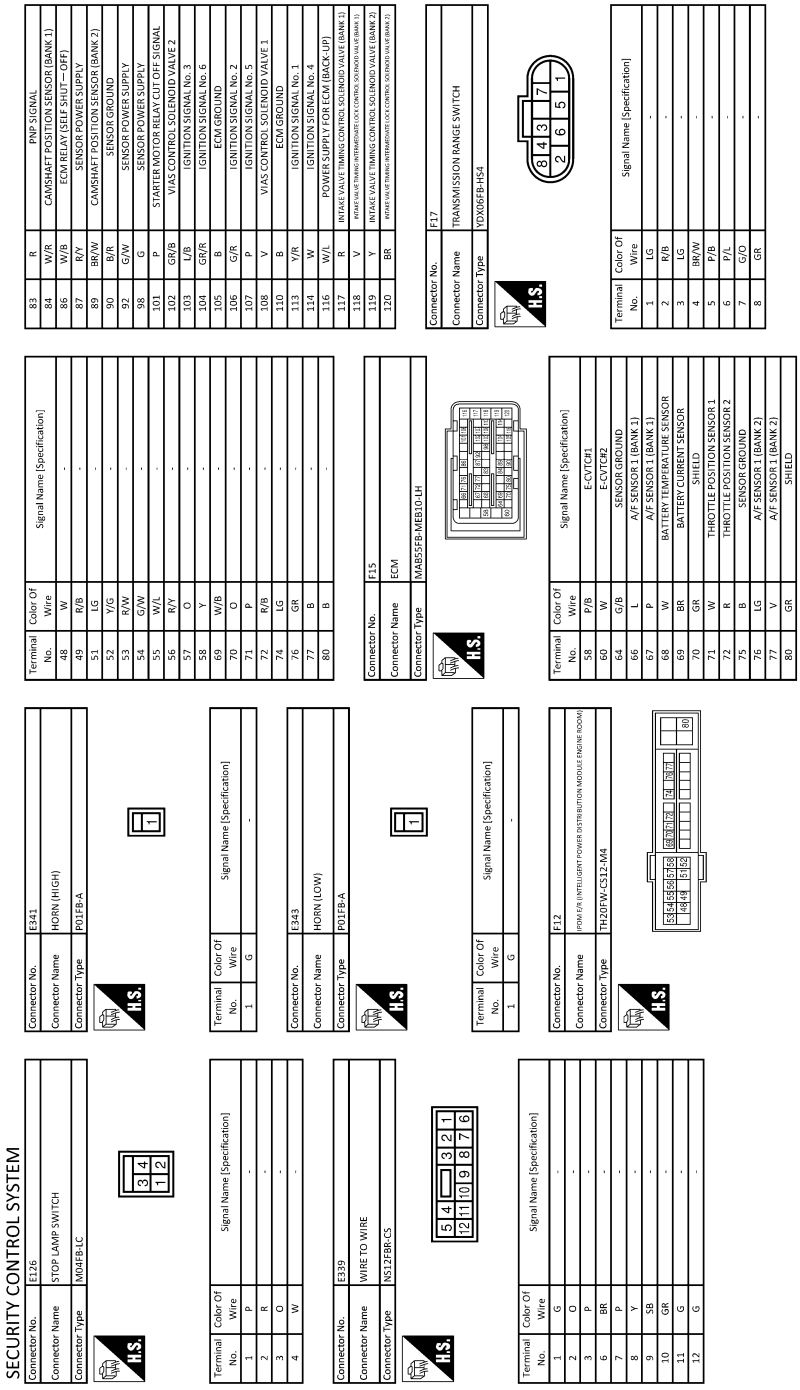

JRKWF5504GB

SECURITY CONTROL SYSTEM

Connector No.	F23
Connector Name	TCM
Connector Type	RH40FB-RZ8-L-RH

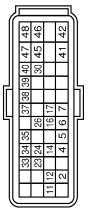

Terminal No.	Color Of Wire	Signal Name [Specification]
2	GR	L_RANGE_SW
4	G/O	D_RANGE_SW
5	P/L	N_RANGE_SW
6	P/B	R_RANGE_SW
7	BR/W	P_RANGE_SW
11	W/R	SENSOR GROUND
12	V	CVT FLUID TEMPERATURE SENSOR
14	W	G SENSOR
16	V/W	SECONDARY PRESSURE SENSOR
17	LG	PRIMARY PRESSURE SENSOR
23	P	CAN-L
24	BR	INPUT SPEED SENSOR
26	L/O	SENSOR POWER
30	R/Y	LINE PRESSURE SOLENOID VALVE
33	L	CAN-H
34	LG/R	OUTPUT SPEED SENSOR
35	LG	PRIMARY SPEED SENSOR
37	L/W	SELECT SOLENOID VALVE
38	V/R	TORQUE CONVERTER CLUTCH SOLENOID VALVE
39	W/B	SECONDARY PRESSURE SOLENOID VALVE
40	B/R	PRIMARY PRESSURE SOLENOID VALVE
41	B	GROUND
42	B	GROUND
45	LG	BATTERY POWER SUPPLY
46	LG	BATTERY POWER SUPPLY
47	Y	IGNITION POWER SUPPLY
48	Y	IGNITION POWER SUPPLY

Connector No.	F121
Connector Name	WIRE TO WIRE
Connector Type	NS10FW-CS

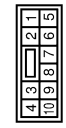

Terminal No.	Color Of Wire	Signal Name [Specification]
1	B/Y	-
2	R/Y	-
4	W/L	-
5	R/W	-
6	B	-
7	B	-
8	B	-
10	B	-

Connector No.	F123
Connector Name	WIRE TO WIRE
Connector Type	TK16FGY-11V

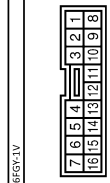

Terminal No.	Color Of Wire	Signal Name [Specification]
1	L	-
2	W	-
3	G/R	-
4	P/B	-
5	R	-
6	L/R	-
7	P	-
8	P	-
9	W/R	-
10	Y/B	-
11	BR/W	-
12	BR	-

13	G	-
14	B	-
15	L/O	-
16	R	-

Connector No.	M44
Connector Name	DATA LINK CONNECTOR
Connector Type	BD16FW

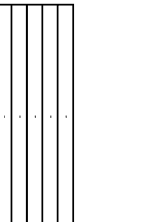

Terminal No.	Color Of Wire	Signal Name [Specification]
3	LG	-
4	GR	-
5	GR	-
6	L	-
7	R	-
8	G	-
11	SB	-
14	P	-
16	P	-

Connector No.	M6
Connector Name	FUSE BLOCK (J/B)
Connector Type	CS06FW-M2

Terminal No.	Color Of Wire	Signal Name [Specification]
1A	Y	-
2A	G	-
3A	L	-
4A	GR	-
5A	V	-

6A	R	-
7A	GR	-
8A	L	-

Connector No.	M7
Connector Name	FUSE BLOCK (J/B)
Connector Type	NS10FW-CS

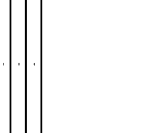

Terminal No.	Color Of Wire	Signal Name [Specification]
3B	V	-
4B	W	-
5B	BR	-
6B	O	-
8B	R/L	-
9B	GR	-

Connector No.	M8
Connector Name	FUSE BLOCK (J/B)
Connector Type	NS12FW-CS

Terminal No.	Color Of Wire	Signal Name [Specification]
10C	LG	-
11C	V	-
12C	Y	-
6C	GR	-
7C	GR	-
8C	G	-
9C	Y	-

JRKWF5505GB

SECURITY CONTROL SYSTEM

Connector No.	M11
Connector Name	WIRE TO WIRE
Connector Type	TH70FW-CS10-M3

H.S.

Terminal No.	Color Of Wire	Signal Name [Specification]
1	SHIELD	-
2	W	-
3	B	-
4	R	-
6	G	-
7	R	-
8	G	-
9	B	-
10	R	-
11	W	-
12	L	- [Without automatic drive positioner]
12	LG	- [With automatic drive positioner]
13	G	- [Without automatic drive positioner]
13	Y	- [With automatic drive positioner]
14	L	-
15	P	-
31	R	-
32	LG	-
37	BR	- [With automatic drive positioner]
37	W	- [Without automatic drive positioner]
38	R	-
39	BE	- [Without automatic drive positioner]
39	Y	- [With automatic drive positioner]
40	P	-
41	L	-
42	G	-
43	W	-
45	P	-
46	V	-
47	R	-
49	G	-
51	G	-
52	W	-
53	B	-
54	LG	-
55	L	-
56	SHIELD	-
61	R	-
62	W	-
63	B	-
64	W	-
66	W	-
67	BR	-
69	P	-
71	R	-
72	L	-
73	LG	-
74	Y	-
75	Y	-
76	V	-
77	P	-
78	BR	-
80	Y	-
81	W	-
82	L	-
83	R	-

Connector No.	M18
Connector Name	WIRE TO WIRE
Connector Type	TH40MW-CS15

H.S.

Terminal No.	Color Of Wire	Signal Name [Specification]
1	B	-
2	R	-
3	W	-
4	Y	-
5	SB	-
6	LG	-
7	V	-
8	L	-
9	GR	-
10	Y	-
11	V	-
12	G	-
13	G	-
14	B	- [Without BOSE system]
14	R	- [With BOSE system]
15	W	- [With BOSE system]
15	Y	- [Without BOSE system]
16	W	-
17	BE	-
18	P	-
19	W	-
20	LG	-
21	P	-
22	G	-
23	R	-
24	B	-
25	W	-
26	SHIELD	-
27	Y	-
28	G	-
29	W	-
30	R	-
31	W	-
32	G	-
33	BE	-
34	P	-
35	W	-
36	LG	-
37	W	-
38	P	-
39	V	-
40	R	-
41	B	-
42	W	-
43	G	-
44	B	-
45	B	- [With around view monitor]
45	GR	- [Without around view monitor]
46	R	- [Without around view monitor]
46	W	- [With around view monitor]
47	GR	-
48	GR	-
49	P	- [Without automatic drive positioner]
49	R	- [With automatic drive positioner]
50	GR	- [With automatic drive positioner]
50	W	- [Without automatic drive positioner]
51	B	- [Without automatic drive positioner]
51	G	- [With automatic drive positioner]
52	GR	- [Without automatic drive positioner]
52	P	- [With automatic drive positioner]
53	SHIELD	-
54	W	-
55	B	-

Connector No.	M20
Connector Name	WIRE TO WIRE
Connector Type	TH40MW-CS15

H.S.

Terminal No.	Color Of Wire	Signal Name [Specification]
7	B	-
8	L	- [With manual A/C]
8	Y	- [With auto A/C]
9	GR	- [With auto A/C]
9	LG	- [With manual A/C]
10	V	-
11	SB	-
12	V	-
14	L	-
15	B	- [Without BOSE system]
15	LG	- [With BOSE system]
16	G	-
17	P	-
18	R	-
19	LG	-
21	R	-
22	B	-
23	W	-
24	SHIELD	-
25	B	-
26	W	-
36	LG	-
37	W	-
38	P	-
39	Y	-
40	B	-
41	GR	-
42	BE	-
43	R	-
45	R	-
46	GR	-
50	W	-
51	B	-
52	GR	-
53	SHIELD	-
54	W	-

JRKWF5506GB

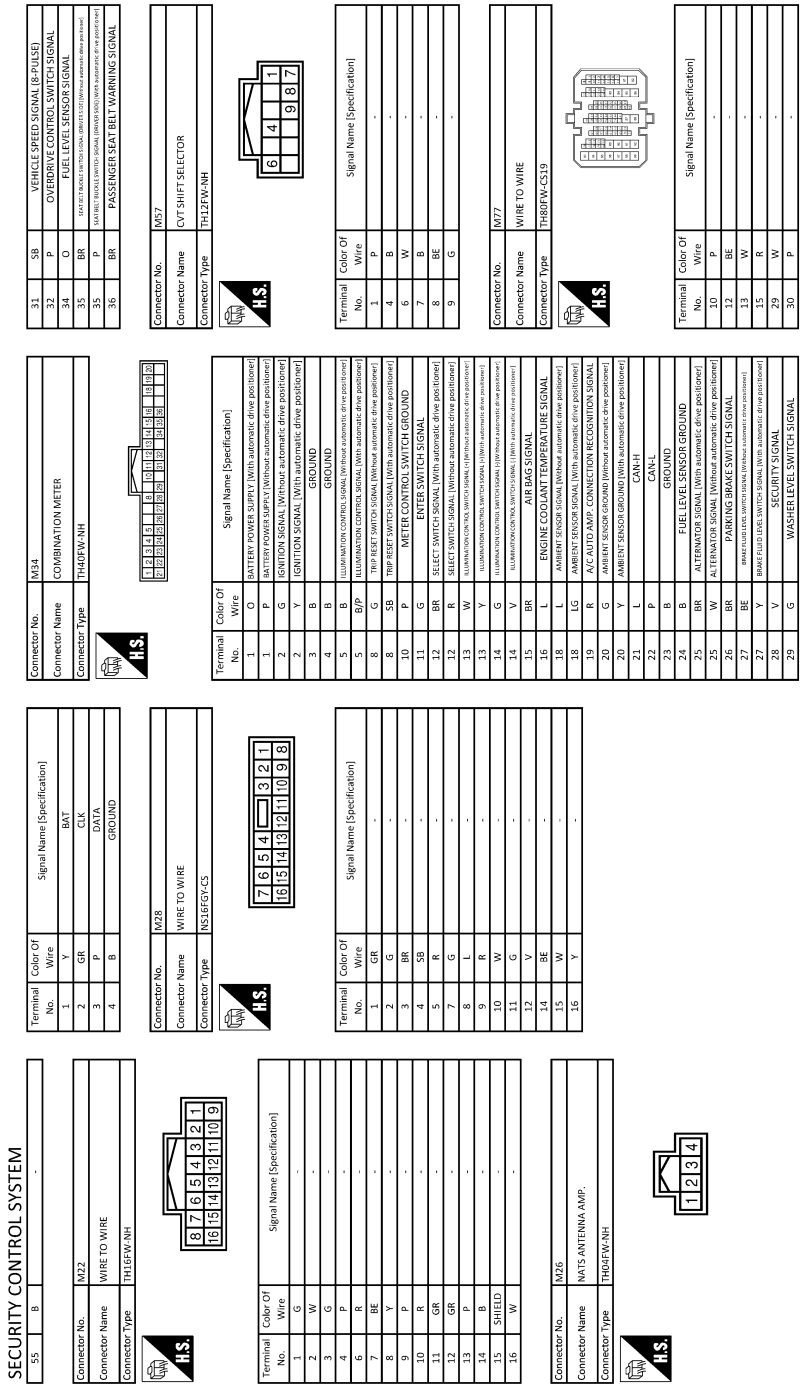

JRKWF5507GB

SECURITY CONTROL SYSTEM

31	BE	-
37	SHIELD	-
38	B	- [Without around view monitor]
38	W	- [With around view monitor]
39	B	- [With around view monitor]
39	W	- [Without around view monitor]
40	R	-
51	LG	-
52	B	-
53	BE	-
54	P	-
55	L	-
57	Y	-
58	L	-
59	BE	-
60	G	-
61	LG	-
62	SB	-
63	BE	-
64	R	-
65	G	-
66	SHIELD	-
67	B	-
68	W	-
69	SHIELD	-
70	B	-
71	W	-
72	G	-
74	GR	-
75	G	-
77	W	-
78	R	-
79	W	-
80	G	-
81	L	-
82	W	-
87	V	-
88	LG	-
89	GR	-
90	R	- [With automatic drive positioner]
90	Y	- [Without automatic drive positioner]
91	LG	-
92	BR	-

Connector No.	M79
Connector Name	WIRE TO WIRE
Connector Type	TH16FW-NH

H.S.

8	7	6	5	4	3	2	1
16	15	14	13	12	11	10	9

Terminal No.	Color Of Wire	Signal Name [Specification]
2	GR	-
3	B	-
4	P	-
5	BR	-
9	L	-
10	P	-
11	W	-
12	R	-
13	BE	-
14	W	-
15	G	-
16	P	-

Connector No.	M101
Connector Name	PUSH-BUTTON IGNITION SWITCH
Connector Type	TK08FBR

H.S.

1		2	3
4	5	6	7	8

Terminal No.	Color Of Wire	Signal Name [Specification]
1	B	-
2	B	-
3	P	-
4	V	-
5	W	-
6	R	-
7	G	-
8	W	-

Connector No.	M105
Connector Name	INSIDE KEY ANTENNA (INSTRUMENT CENTER)
Connector Type	RK02FL

H.S.

C12

Terminal No.	Color Of Wire	Signal Name [Specification]
1	GR	-
2	B	-

Connector No.	M106
Connector Name	JOINT CONNECTOR-M15
Connector Type	BL30FW

H.S.

11	10	9	8	7	6	5	4	3	2	1
22	21	20	19	18	17	16	15	14	13	12
33	32	31	30	29	28	27	26	25	24	23

Terminal No.	Color Of Wire	Signal Name [Specification]
1	B	-
2	B	-
3	B	-
4	L	-
5	L	-
6	L	-
8	GR	-
9	Y	-
10	Y	-
11	Y	-
12	R	-
14	R	-
15	R	-
17	Y	-
18	Y	-
19	Y	-
20	Y	-
21	G	- [Without automatic drive positioner]
21	Y	- [With automatic drive positioner]
22	G	- [Without automatic drive positioner]
22	Y	- [With automatic drive positioner]
23	GR	-
25	GR	-
26	V	-
27	V	-
28	V	-
29	SB	-
30	BE	-
31	SB	-
32	SB	-
33	BE	-

Connector No.	M121
Connector Name	BCM (BODY CONTROL MODULE)
Connector Type	TH40FB-NH

H.S.

1	2	3	4	5	6	7	8	9		11	12	13	14	15	16
21	22	23	24	25	26	27	28	29	30	31	32	33	34	35	36	37	38	39	40

Terminal No.	Color Of Wire	Signal Name [Specification]
1	W	REAR WINDOW DEF RELAY CONT
2	R	COMBI SW INPUT 5
3	G	COMBI SW INPUT 4
4	BE	COMBI SW INPUT 3
5	G	COMBI SW INPUT 2
6	W	COMBI SW INPUT 1
7	W	KEY CYL UNLOCK SW
8	GR	PW SW COMM [With automatic slide door]
8	Y	KEY CYL LOCK SW [Without automatic slide door]
9	GR	STOP LAMP SW 1
12	GR	DOOR LK & UNLK SW LOCK
13	BR	DOOR LK & UNLK SW UNLOCK
14	L	OPTICAL SENS
15	W	REAR WINDOW DEF SW
16	Y	DIMMER
17	O	SENS PWR SPLY
18	R	RECEIV/SENS GND
21	GR	NATS ANT AMP
23	W	SECURITY IND CONT
25	P	NATS ANT AMP
27	O	A/CON

JRKWF5508GB

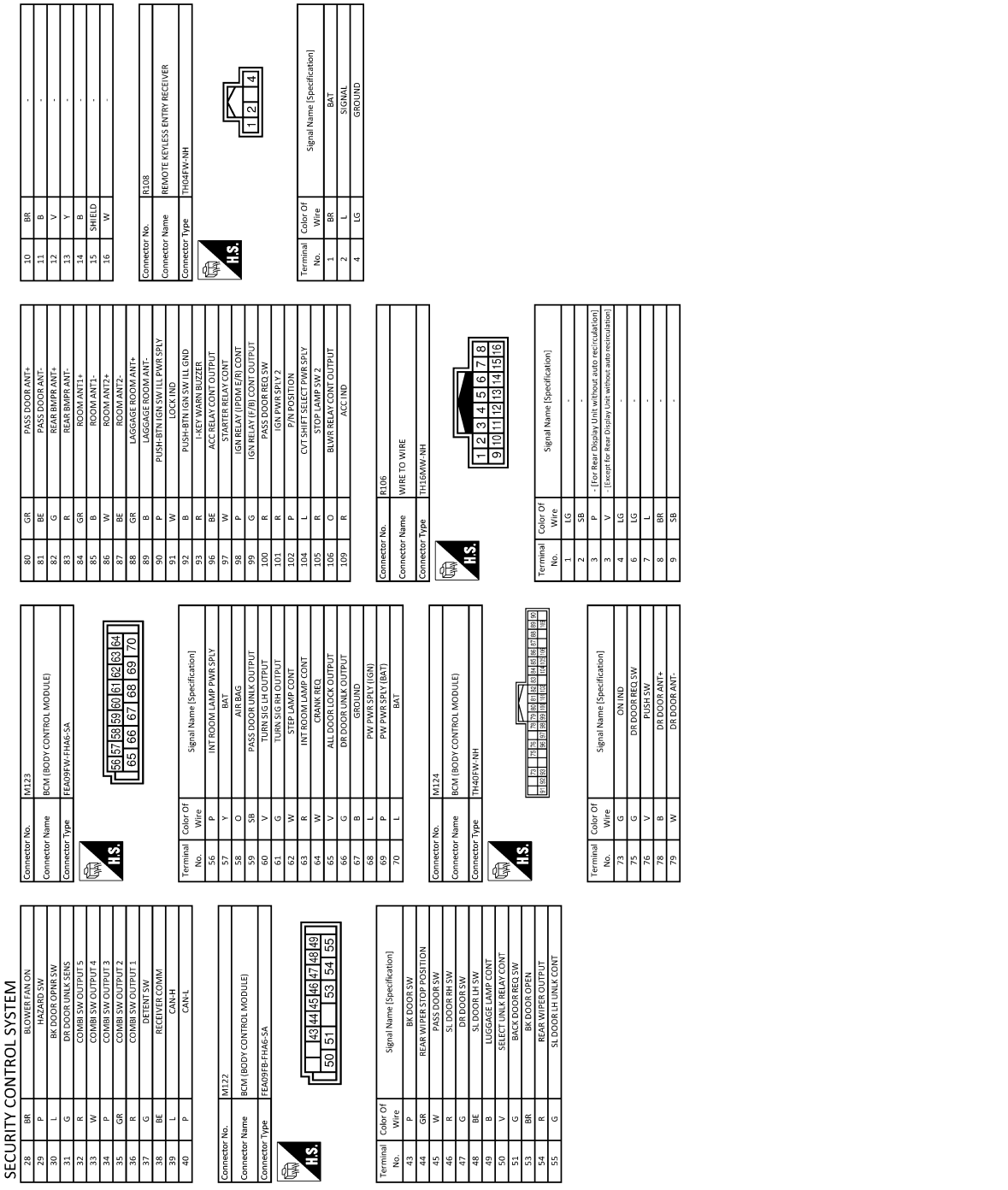

JRKWF5509GB

BASIC INSPECTION

DIAGNOSIS AND REPAIR WORK FLOW

Work Flow

INFOID:0000000012406084

OVERALL SEQUENCE

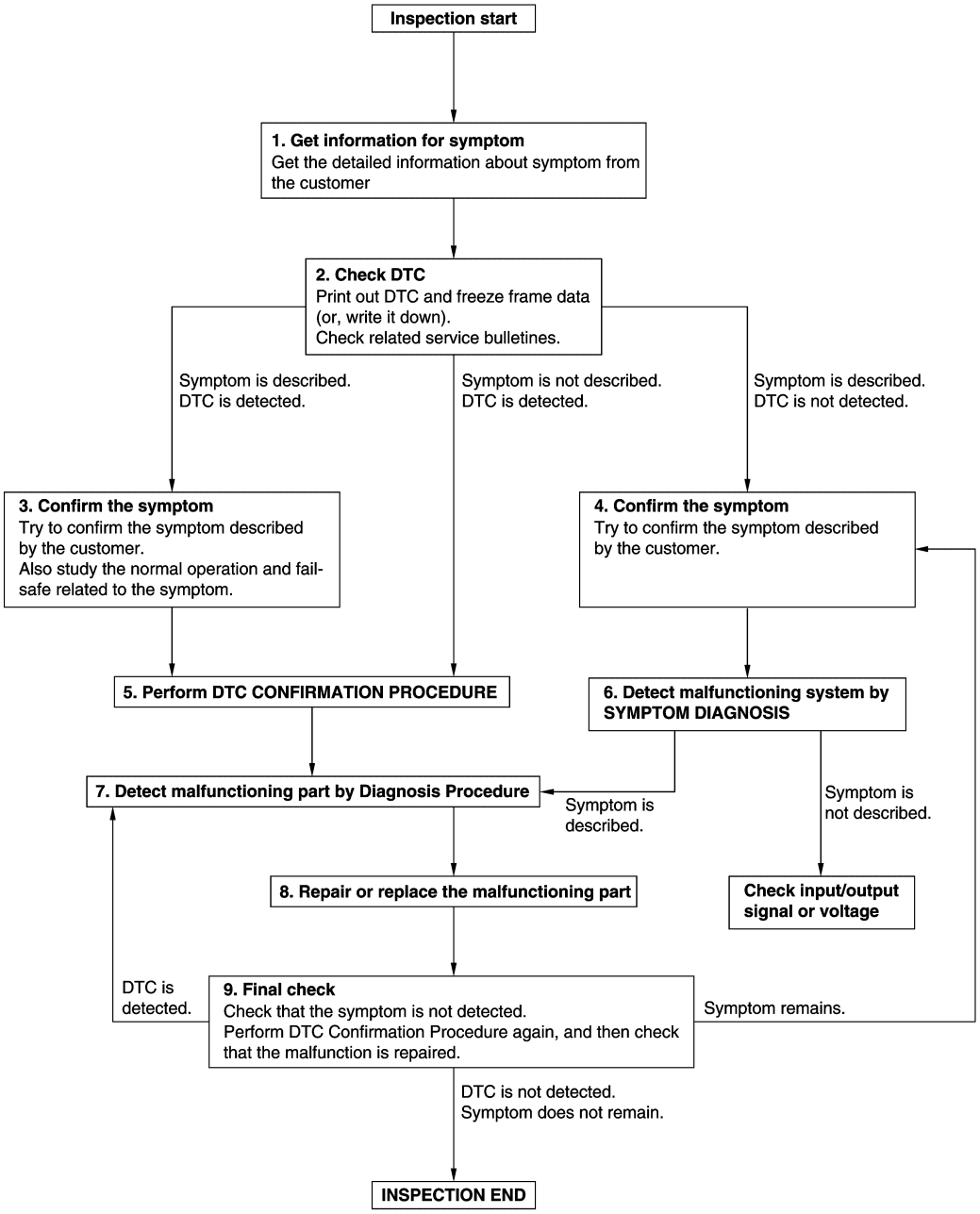

JMKIA8652GB

DETAILED FLOW

1.GET INFORMATION FOR SYMPTOM

1. Get detailed information from the customer about the symptom (the condition and the environment when the incident/malfunction occurs).
2. Check operation condition of the function that is malfunctioning.

>> GO TO 2.

2.CHECK DTC

1. Check DTC.
2. Perform the following procedure if DTC is detected.

- Record DTC and freeze frame data (Print them out using CONSULT.)
- Erase DTC.
- Study the relationship between the cause detected by DTC and the symptom described by the customer.

3. Check related service bulletins for information.

Are any symptoms described and any DTC detected?

Symptom is described, DTC is detected>>GO TO 3.
Symptom is described, DTC is not detected>>GO TO 4.
Symptom is not described, DTC is detected>>GO TO 5.

3.CONFIRM THE SYMPTOM

Try to confirm the symptom described by the customer.
Also study the normal operation and fail-safe related to the symptom.
Verify relation between the symptom and the condition when the symptom is detected.

>> GO TO 5.

4.CONFIRM THE SYMPTOM

Try to confirm the symptom described by the customer.
Verify relation between the symptom and the condition when the symptom is detected.

>> GO TO 6.

5.PERFORM DTC CONFIRMATION PROCEDURE

Perform DTC CONFIRMATION PROCEDURE for the detected DTC, and then check that DTC is detected again. At this time, always connect CONSULT to the vehicle, and check self diagnostic results in real time.
If two or more DTCs are detected, refer to BCS-63, "DTC Inspection Priority Chart" (BCM), and determine trouble diagnosis order.

NOTE:

- Freeze frame data is useful if the DTC is not detected.
- Perform Component Function Check if DTC CONFIRMATION PROCEDURE is not included on Service Manual. This simplified check procedure is an effective alternative though DTC cannot be detected during this check.
  If the result of Component Function Check is NG, it is the same as the detection of DTC by DTC CONFIRMATION PROCEDURE.

Is DTC detected?

YES >> GO TO 7.
NO >> Check according to GI-41, "Intermittent Incident".

6.DETECT MALFUNCTIONING SYSTEM BY SYMPTOM DIAGNOSIS

Detect malfunctioning system according to SYMPTOM DIAGNOSIS based on the confirmed symptom in step 4, and determine the trouble diagnosis order based on possible causes and symptom.

Is the symptom described?

YES >> GO TO 7.
NO >> Monitor input data from related sensors or check voltage of related module terminals using CONSULT.

7.DETECT MALFUNCTIONING PART BY DIAGNOSIS PROCEDURE

Inspect according to Diagnosis Procedure of the system.

Is malfunctioning part detected?

YES >> GO TO 8.
NO >> Check according to GI-41, "Intermittent Incident".

8. REPAIR OR REPLACE THE MALFUNCTIONING PART

1. Repair or replace the malfunctioning part.
2. Reconnect parts or connectors disconnected during Diagnosis Procedure again after repair and replacement.
3. Check DTC. If DTC is detected, erase it.

>> GO TO 9.

9. FINAL CHECK

When DTC is detected in step 2, perform DTC CONFIRMATION PROCEDURE again, and then check that the malfunction is repaired securely.
When symptom is described by the customer, refer to confirmed symptom in step 3 or 4, and check that the symptom is not detected.

Is DTC detected and does symptom remain?

YES-1 >> DTC is detected: GO TO 7.
YES-2 >> Symptom remains: GO TO 4.
NO >> Before returning the vehicle to the customer, always erase DTC.

ADDITIONAL SERVICE WHEN REPLACING CONTROL UNIT

ECM

ECM : Description

INFOID:0000000012406085

Performing the following procedure can automatically activate recommunication of ECM and BCM, but only when the ECM is replaced with a new one*. For details, refer to SEC-60, "ECM : Work Procedure".
*: New one means a virgin ECM that has never been energized on-board.
(In this step, initialization procedure using CONSULT is not necessary)
NOTE:
- **When registering new Key IDs or replacing the ECM that is not brand new, the initialization of BCM using CONSULT is necessary.**
- **If multiple keys are attached to the key holder, separate them before beginning work.**
- **Distinguish keys with unregistered key IDs from those with registered IDs.**

ECM : Work Procedure

INFOID:0000000012406086

1.PERFORM ECM RECOMMUNICATING FUNCTION

1. Install ECM.
2. Contact backside of registered Intelligent key* to push-button ignition switch, then turn power supply position to ON.
   *: To perform this step, use the key that is used before performing ECM replacement.
3. Maintain power supply position in the ON position for at least 5 seconds.
4. Turn power supply position to OFF.
5. Check that the engine starts.

>> GO TO 2.

2.PERFORM ADDITIONAL SERVICE WHEN REPLACING ECM

Perform EC-145, "Description".

>> END

BCM

BCM : Description

INFOID:0000000012406087

BEFORE REPLACEMENT
When replacing BCM, save or print current vehicle specification with CONSULT configuration before replacement. For details, refer to SEC-60, "BCM : Work Procedure".
NOTE:
If “READ CONFIGURATION” can not be used, use the “WRITE CONFIGURATION - Manual selection” after replacing BCM.

AFTER REPLACEMENT
CAUTION:
When replacing BCM, always perform “WRITE CONFIGURATION” with CONSULT. Or not doing so, BCM control function does not operate normally.
- **Complete the procedure of “WRITE CONFIGURATION” in order.**
- **Configuration is different for each vehicle model. Confirm configuration of each vehicle model.**
- **If you set incorrect “WRITE CONFIGURATION”, incidents might occur.**

NOTE:
When replacing BCM, perform the system initialization (NATS) (if equipped).

BCM : Work Procedure

INFOID:0000000012406088

1.SAVING VEHICLE SPECIFICATION

CONSULT Configuration

Perform “READ CONFIGURATION” to save or print current vehicle specification. Refer to BCS-85, "CONFIGURATION (BCM) : Description".

NOTE:
If “READ CONFIGURATION” can not be used, use the “WRITE CONFIGURATION - Manual selection” after replacing BCM.

>> GO TO 2.

2. REPLACE BCM

Replace BCM. Refer to BCS-99, "Removal and Installation".

>> GO TO 3.

3. WRITING VEHICLE SPECIFICATION

CONSULT Configuration
Perform “WRITE CONFIGURATION - Config file” or “WRITE CONFIGURATION - Manual selection” to write vehicle specification. Refer to BCS-85, "CONFIGURATION (BCM) : Description".

>> GO TO 4.

4. INITIALIZE BCM (NATS) (IF EQUIPPED)

Perform BCM initialization. (NATS)

>> WORK END

DTC/CIRCUIT DIAGNOSIS

P1610 LOCK MODE

Description

INFOID:0000000012406089

ECM forcibly switches to the mode that inhibits engine start, when engine start operation is performed 5 times or more while communication between ECM and BCM is not normal.

DTC Logic

INFOID:0000000012406090

DTC DETECTION LOGIC

NOTE:
If DTC P1610 is displayed with other DTC (for BCM or ENGINE), first perform the trouble diagnosis for other DTC.

DTC No.	Trouble diagnosis name	DTC detecting condition	Possible cause
P1610	LOCK MODE	When ECM detects a communication malfunction between ECM and BCM 5 times or more.	—

DTC CONFIRMATION PROCEDURE

1.PERFORM DTC CONFIRMATION PROCEDURE

1. Turn ignition switch ON.
2. Check DTC in “Self Diagnostic Result” mode of “ENGINE” using CONSULT.

Is DTC detected?

YES >> Go to SEC-62, "Diagnosis Procedure".
NO >> INSPECTION END

Diagnosis Procedure

INFOID:0000000012406091

1.CHECK ENGINE START FUNCTION

1. Check that DTC except for DTC P1610 is not detected.
   If detected, erase the DTC after fixing.
2. Turn ignition switch OFF.
3. Depress brake pedal and contact the registered Intelligent Key backside to push-button ignition switch, then wait 5 seconds.
4. Turn ignition switch ON.
5. Turn ignition switch OFF and wait 5 seconds.
6. Repeat steps 3 and 5 twice (a total of 3 times).
7. Check that engine can start.

>> INSPECTION END

P1611 ID DISCORD, IMMU-ECM

DTC Logic

INFOID:0000000012406092

DTC DETECTION LOGIC

DTC No.	Trouble diagnosis name	DTC detecting condition	Possible cause
P1611	ID DISCORD, IMMU-ECM	The ID verification results between BCM and ECM are NG.	• BCM • ECM

DTC CONFIRMATION PROCEDURE

1.PERFORM DTC CONFIRMATION PROCEDURE

1. Turn ignition switch ON.
2. Check DTC in “Self Diagnostic Result” mode of “ENGINE” using CONSULT.

Is DTC detected?

YES >> Go to SEC-63, "Diagnosis Procedure".
NO >> INSPECTION END

Diagnosis Procedure

INFOID:0000000012406093

1.PERFORM INITIALIZATION

Perform initialization of BCM and registration of all Intelligent Keys using CONSULT.

Can the system be initialized and can the engine be started with registered Intelligent Key?

YES >> INSPECTION END
NO >> GO TO 2.

2.CHECK SELF DIAGNOSTIC RESULT

1. Select “Self Diagnostic Result” mode of “ENGINE” using CONSULT.
2. Erase DTC.
3. Perform DTC CONFIRMATION PROCEDURE for DTC P1611. Refer to SEC-63, "DTC Logic".

Is DTC detected?

YES >> GO TO 3.
NO >> INSPECTION END

3.REPLACE BCM

1. Replace BCM. Refer to BCS-99, "Removal and Installation".
2. Perform initialization of BCM and registration of all Intelligent Keys using CONSULT.

Can the system be initialized and can the engine be started with registered Intelligent Key?

YES >> INSPECTION END
NO >> GO TO 4.

4.REPLACE ECM

Replace ECM.
Refer to EC-513, "Removal and Installation".

>> INSPECTION END

P1612 CHAIN OF ECM-IMMU

DTC Logic

INFOID:0000000012406094

DTC DETECTION LOGIC

NOTE:

- If DTC P1612 is displayed with DTC U1000 (for BCM), first perform the trouble diagnosis for DTC U1000. Refer to BCS-88, "DTC Logic".
- If DTC P1612 is displayed with DTC U1010 (for BCM), first perform the trouble diagnosis for DTC U1010. Refer to BCS-89, "DTC Logic".

DTC No.	Trouble diagnosis name	DTC detecting condition	Possible cause
P1612	CHAIN OF ECM-IMMU	Inactive communication between ECM and BCM	• Harness or connectors (The CAN communication line is open or shorted.) • BCM • ECM

DTC CONFIRMATION PROCEDURE

1.PERFORM DTC CONFIRMATION PROCEDURE

1. Turn ignition switch ON.
2. Check DTC in “Self Diagnostic Result” mode of “ENGINE” using CONSULT.

Is DTC detected?

YES >> Go to SEC-64, "Diagnosis Procedure".
NO >> INSPECTION END

Diagnosis Procedure

INFOID:0000000012406095

1.REPLACE BCM

1. Replace BCM. Refer to BCS-99, "Removal and Installation".
2. Perform initialization of BCM and registration of all Intelligent Keys using CONSULT.

Can the system be initialized and can the engine be started with registered Intelligent Key?

YES >> INSPECTION END
NO >> GO TO 2.

2.REPLACE ECM

Replace ECM.
Refer to EC-513, "Removal and Installation".

>> INSPECTION END

B2192 ID DISCORD, IMMU-ECM

DTC Logic

INFOID:0000000012406096

DTC DETECTION LOGIC

DTC No.	Trouble diagnosis name	DTC detecting condition	Possible cause
B2192	ID DISCORD BCM-ECM	The ID verification results between BCM and ECM are NG.	• BCM • ECM

DTC CONFIRMATION PROCEDURE

1.PERFORM DTC CONFIRMATION PROCEDURE

1. Turn ignition switch ON.
2. Check DTC in “Self Diagnostic Result” mode of “BCM” using CONSULT.

Is DTC detected?

YES >> Go to SEC-65, "Diagnosis Procedure".
NO >> INSPECTION END

Diagnosis Procedure

INFOID:0000000012406097

1.PERFORM INITIALIZATION

Perform initialization of BCM and registration of all Intelligent Keys using CONSULT.

Can the system be initialized and can the engine be started with registered Intelligent Key?

YES >> INSPECTION END
NO >> GO TO 2.

2.CHECK SELF DIAGNOSTIC RESULT

1. Select “Self Diagnostic Result” mode of “BCM” using CONSULT.
2. Erase DTC.
3. Perform DTC CONFIRMATION PROCEDURE for DTC B2192. Refer to SEC-65, "DTC Logic".

Is DTC detected?

YES >> GO TO 3.
NO >> INSPECTION END

3.REPLACE BCM

1. Replace BCM. Refer to BCS-99, "Removal and Installation".
2. Perform initialization of BCM and registration of all Intelligent Keys using CONSULT.

Can the system be initialized and can the engine be started with registered Intelligent Key?

YES >> INSPECTION END
NO >> GO TO 4.

4.REPLACE ECM

Replace ECM.
Refer to EC-513, "Removal and Installation".

>> INSPECTION END

B2193 CHAIN OF ECM-IMMU

DTC Logic

INFOID:0000000012406098

DTC DETECTION LOGIC

NOTE:

- If DTC B2193 is displayed with DTC U1000, first perform the trouble diagnosis for DTC U1000. Refer to BCS-88, "DTC Logic".
- If DTC B2193 is displayed with DTC U1010, first perform the trouble diagnosis for DTC U1010. Refer to BCS-89, "DTC Logic".

DTC No.	Trouble diagnosis name	DTC detecting condition	Possible cause
B2193	CHAIN OF BCM-ECM	Inactive communication between BCM and ECM	• Harness or connectors (The CAN communication line is open or shorted.) • BCM • ECM

DTC CONFIRMATION PROCEDURE

1.PERFORM DTC CONFIRMATION PROCEDURE

1. Turn ignition switch ON.
2. Check DTC in “Self Diagnostic Result” mode of “BCM” using CONSULT.

Is DTC detected?

YES >> Go to SEC-66, "Diagnosis Procedure".
NO >> INSPECTION END

Diagnosis Procedure

INFOID:0000000012406099

1.REPLACE BCM

1. Replace BCM. Refer to BCS-99, "Removal and Installation".
2. Perform initialization of BCM and registration of all Intelligent Keys using CONSULT.

Can the system be initialized and can the engine be started with registered Intelligent Key?

YES >> INSPECTION END
NO >> GO TO 2.

2.REPLACE ECM

Replace ECM.
Refer to EC-513, "Removal and Installation".

>> INSPECTION END

B2195 ANTI-SCANNING

DTC Logic

INFOID:0000000012406100

DTC DETECTION LOGIC

DTC No.	Trouble diagnosis name	DTC detecting condition	Possible cause
B2195	ANTI-SCANNING	ID verification between BCM and ECM that is out of the specified specification is detected.	ID verification request out of the specified specification

DTC CONFIRMATION PROCEDURE

1.PERFORM DTC CONFIRMATION PROCEDURE

1. Turn ignition switch ON.
2. Check DTC in “Self Diagnostic Result” mode of “BCM” using CONSULT.

Is DTC detected?

YES >> Refer to SEC-67, "Diagnosis Procedure".
NO >> INSPECTION END.

Diagnosis Procedure

INFOID:0000000012406101

1.CHECK SELF DIAGNOSTIC RESULT 1

1. Select “Self Diagnostic Result” mode of “BCM” using CONSULT.
2. Erase DTC.
3. Perform DTC CONFIRMATION PROCEDURE for DTC B2195. Refer to SEC-67, "DTC Logic".

Is DTC detected?

YES >> GO TO 2.
NO >> INSPECTION END

2.CHECK EQUIPMENT OF THE VEHICLE

Check that unspecified accessory part related to engine start is not installed.

Is unspecified accessory part related to engine start installed?

YES >> GO TO 3.
NO >> GO TO 4.

3.CHECK SELF DIAGNOSTIC RESULT 2

1. Obtain the customers approval to remove unspecified accessory part related to engine start, and then remove it.
2. Select “Self Diagnostic Result” of “BCM” using CONSULT.
3. Erase DTC.
4. Perform DTC CONFIRMATION PROCEDURE for DTC B2195. Refer to SEC-67, "DTC Logic".

Is DTC detected?

YES >> GO TO 4.
NO >> INSPECTION END

4.REPLACE BCM

1. Replace BCM. Refer to BCS-99, "Removal and Installation".
2. Perform initialization of BCM and registration of all Intelligent Keys using CONSULT.

>> INSPECTION END

B2196 DONGLE UNIT

Description

INFOID:0000000012406102

BCM performs ID verification between BCM and dongle unit.
When verification result is OK, BCM permits cranking.

DTC Logic

INFOID:0000000012406103

DTC DETECTION LOGIC

DTC No.	Trouble diagnosis name	DTC detecting condition	Possible cause
B2196	DONGLE NG	The ID verification results between BCM and dongle unit is NG.	• Harness or connectors (Dongle unit circuit is open or shorted.) • Dongle unit

DTC CONFIRMATION PROCEDURE

1.PERFORM DTC CONFIRMATION PROCEDURE

1. Turn ignition switch ON.
2. Turn ignition switch OFF.
3. Turn ignition switch ON.
4. Check DTC in “Self-diagnosis result” mode of “BCM” using CONSULT.

Is the DTC detected?

YES >> Refer to SEC-68, "Diagnosis Procedure".
NO >> INSPECTION END

Diagnosis Procedure

INFOID:0000000012406104

1.PERFORM INITIALIZATION

1. Perform initialization of BCM and registration of all Intelligent Keys using CONSULT.
2. Start the engine.

Dose the engine start?

YES >> INSPECTION END
NO >> GO TO 2.

2.CHECK DONGLE UNIT CIRCUIT

1. Turn ignition switch OFF.
2. Disconnect BCM connector and dongle unit connector.
3. Check continuity between BCM harness connector and dongle unit harness connector.

BCM		Dongle unit		Continuity
Connector	Terminal	Connector	Terminal	
M121	24	M130	7	Existed

4. Check continuity between BCM harness connector and ground.

BCM		Ground	Continuity
Connector	Terminal		
M121	24		Not existed

Is the inspection result normal?

YES >> GO TO 3.
NO >> Repair or replace harness.

3.CHECK DONGLE UNIT GROUND CIRCUIT

Check continuity between dongle unit harness connector and ground.

Dongle unit		Ground	Continuity
Connector	Terminal		
M130	1		Existed

Is the inspection result normal?

YES >> Replace dongle unit.
NO >> Repair or replace harness.

B2198 NATS ANTENNA AMP.

DTC Logic

INFOID:0000000012406105

DTC DETECTION LOGIC

DTC No.	Trouble diagnosis name	DTC detecting condition	Possible cause
B2198	NATS ANTENNA AMP	Inactive communication between NATS antenna amp. and BCM is detected when BCM enters in the low power consumption mode (BCM sleep condition)	• Harness or connectors (NATS antenna amp. circuit is open or shorted.) • NATS antenna amp. • IPDM E/R • BCM

DTC CONFIRMATION PROCEDURE

1.PERFORM DTC CONFIRMATION PROCEDURE

1. Make the conditions that BCM enters in the low power consumption mode (BCM sleep condition). Refer to BCS-14, "POWER CONSUMPTION CONTROL SYSTEM : System Description".
2. Turn ignition switch ON.
3. Check DTC in “Self Diagnostic Result” mode of “BCM” using CONSULT.

Is DTC detected?

YES >> Go to SEC-70, "Diagnosis Procedure".
NO >> INSPECTION END

Diagnosis Procedure

INFOID:0000000012406106

1.CHECK FUSE

1. Turn ignition switch OFF.
2. Check that the following fuse in IPDM E/R is not blown (open).

Signal name	Fuse No.
Battery power supply	50 (15 A)

Is the fuse blown (open)?

YES >> Replace the blown (open) fuse after repairing the affected circuit if a fuse is blown (open).
NO >> GO TO 2.

2.CHECK NATS ANTENNA AMP. POWER SUPPLY

1. Disconnect NATS antenna amp. connector.
2. Check voltage between NATS antenna amp. harness connector and ground.

(+)		(–)	Voltage (V)
NATS antenna amp.			
Connector	Terminal		
M26	1	Ground	6 - 16

Is the inspection result normal?

YES >> GO TO 4.
NO >> GO TO 3.

3.CHECK NATS ANTENNA AMP. POWER SUPPLY CIRCUIT

1. Disconnect IPDM E/R connector.
2. Check continuity between IPDM E/R harness connector and NATS antenna amp. connector.

IPDM E/R		NATS antenna amp.		Continuity
Connector	Terminal	Connector	Terminal	
F12	55	M26	1	Existed

Is the inspection result normal?

YES >> Replace IPDM E/R. Refer to PCS-34, "Removal and Installation".
NO >> Repair or replace harness.

4. CHECK NATS ANTENNA AMP. GROUND CIRCUIT

Check continuity between NATS antenna amp. harness connector and ground.

NATS antenna amp.		Ground	Continuity
Connector	Terminal		
M26	4		Existed

Is the inspection result normal?

YES >> GO TO 5.
NO >> Repair or replace harness.

5. CHECK NATS ANTENNA AMP. COMMUNICATION SIGNAL 1

Check voltage signal between NATS antenna amp. harness connector and ground using an oscilloscope.

(+)		(–)	Condition		Voltage (V)
NATS antenna amp.					
Connector	Terminal				
M26	2	Ground	Intelligent Key: Intelligent Key battery is removed	Brake pedal: Depressed **NOTE:** Waveform varies each time when brake pedal is depressed	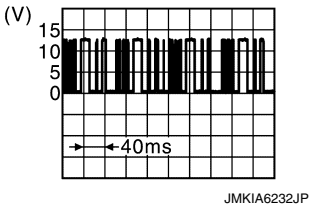 JMKIA6232JP
				Brake pedal: Released	9 - 16

Is the inspection result normal?

YES >> GO TO 7.
NO >> GO TO 6.

6. CHECK NATS ANTENNA AMP. OUTPUT SIGNAL CIRCUIT 1

1. Disconnect BCM connector.
2. Check continuity between NATS antenna amp. connector and BCM harness connector.

NATS antenna amp.		BCM		Continuity
Connector	Terminal	Connector	Terminal	
M26	2	M121	21	Existed

3. Check continuity between BNATS antenna amp. harness connector and ground.

NATS antenna amp.		Ground	Continuity
Connector	Terminal		
M26	2		Not existed

Is the inspection result normal?

YES >> GO TO 9.
NO >> Repair or replace harness.

7. CHECK NATS ANTENNA AMP. COMMUNICATION SIGNAL 2

Check voltage signal between NATS antenna amp. harness connector and ground using an oscilloscope.

(+) NATS antenna amp. Connector	(+) NATS antenna amp. Terminal	(–)	Condition		Voltage (V)
M26	3	Ground	Intelligent Key: Intelligent Key battery is removed	Brake pedal: Depressed **NOTE:** Waveform varies each time when brake pedal is depressed	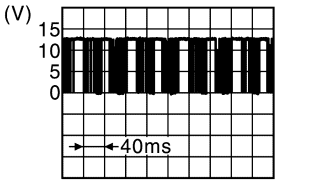 JMKIA6233JP
				Brake pedal: Released	9 - 16

Is the inspection result normal?

YES >> Replace NATS antenna amp. Refer to SEC-133, "Removal and Installation".
NO >> GO TO 8.

8.CHECK NATS ANTENNA AMP. OUTPUT SIGNAL CIRCUIT 2

1. Disconnect BCM connector.
2. Check continuity between NATS antenna amp. harness connector and BCM connector.

NATS antenna amp.		BCM		Continuity
Connector	Terminal	Connector	Terminal	
M26	3	M121	25	Existed

3. Check continuity between NATS antenna amp. harness connector and ground.

NATS antenna amp.		Ground	Continuity
Connector	Terminal		
M26	3		Not existed

Is the inspection result normal?

YES >> GO TO 9.
NO >> Repair or replace harness.

9.REPLACE BCM

1. Replace BCM. Refer to BCS-99, "Removal and Installation".
2. Perform initialization of BCM and registration of all Intelligent Keys using CONSULT.

>> INSPECTION END

B2555 STOP LAMP

DTC Logic

INFOID:0000000012406107

DTC DETECTION LOGIC

DTC No.	Trouble diagnosis name	DTC detecting condition	Possible cause
B2555	STOP LAMP	BCM makes a comparison between the upper voltage and lower voltage of stop lamp switch. It judges from their values to detect the malfunctioning circuit.	• Harness or connectors (Stop lamp switch circuit is open or shorted.) • Stop lamp switch • Fuse • BCM

DTC CONFIRMATION PROCEDURE

1.PERFORM DTC CONFIRMATION PROCEDURE

1. Depress brake pedal and wait 1 second or more.
2. Turn ignition switch ON.
3. Check DTC in “Self Diagnostic Result” mode of “BCM” using CONSULT.

Is DTC detected?

YES >> Go to SEC-73, "Diagnosis Procedure".
NO >> INSPECTION END

Diagnosis Procedure

INFOID:0000000012406108

1.CHECK STOP LAMP SWITCH INPUT SIGNAL 1

1. Turn ignition switch OFF.
2. Disconnect BCM connector.
3. Check voltage between BCM harness connector and ground.

(+)		(–)	Voltage (V) (Approx.)
BCM			
Connector	Terminal		
M124	105	Ground	9 - 16

Is the inspection normal?

YES >> GO TO 2.
NO-1 >> Check 10 A fuse [No. 7, located in the fuse block (J/B)].
NO-2 >> Check harness for open or short between BCM and fuse.

2.CHECK STOP LAMP SWITCH INPUT SIGNAL 2

Check voltage between BCM harness connector and ground.

(+)		(–)	Condition		Voltage (V) (Approx.)
BCM					
Connector	Terminal				
M121	9	Ground	Brake pedal	Depressed	9 - 16
				Not depressed	0

Is the inspecting result normal?

YES >> GO TO 3.
NO >> GO TO 4.

3.REPLACE BCM

1. Replace BCM. Refer to BCS-99, "Removal and Installation".
2. Perform initialization of BCM and registration of all Intelligent Keys using CONSULT.

>> INSPECTION END

4.CHECK STOP LAMP SWITCH POWER SUPPLY CIRCUIT

1. Disconnect stop lamp switch connector.
2. Check voltage between stop lamp switch harness connector and ground.

(+)		(–)	Voltage (V) (Approx.)
Stop lamp switch			
Connector	Terminal		
E126	1	Ground	Battery voltage

Is the inspection result normal?

YES >> GO TO 5.
NO >> Check harness for open or short between stop lamp switch and fuse.

5.CHECK STOP LAMP SWITCH CIRCUIT

1. Check continuity between stop lamp switch harness connector and BCM harness connector.

Stop lamp switch		BCM		Continuity
Connector	Terminal	Connector	Terminal	
E126	2	M121	9	Existed

2. Check continuity between stop lamp switch harness connector and ground.

Stop lamp switch		Ground	Continuity
Connector	Terminal		
E126	2		Existed

Is the inspection result normal?

YES >> GO TO 6.
NO >> Repair or replace harness.

6.CHECK STOP LAMP SWITCH

Refer to SEC-74, "Component Inspection".

Is the inspection result normal?

YES >> GO TO 7.
NO >> Replace stop lamp switch. Refer to BR-20, "Removal and Installation".

7.CHECK INTERMITTENT INCIDENT

Refer to GI-41, "Intermittent Incident".

>> INSPECTION END

Component Inspection

INFOID:0000000012406109

1.CHECK STOP LAMP SWITCH

1. Turn ignition switch OFF.
2. Disconnect stop lamp switch connector.
3. Check continuity between stop lamp switch terminals.

Stop lamp switch		Condition		Continuity
Terminal				
1	2	Brake pedal	Not depressed	Not existed
			Depressed	Existed

Is the inspection result normal?

YES >> INSPECTION END
NO >> Replace stop lamp switch. Refer to BR-20, "Removal and Installation".

B2556 PUSH-BUTTON IGNITION SWITCH

DTC Logic

INFOID:0000000012406111

DTC DETECTION LOGIC

DTC No.	Trouble diagnosis name	DTC detecting condition	Possible cause
B2556	PUSH-BTN IGN SW	BCM detects the push-button ignition switch stuck at ON for 100 seconds or more.	• Harness or connectors (Push-button ignition switch circuit is shorted.) • Push-button ignition switch • BCM

DTC CONFIRMATION PROCEDURE

1.PERFORM DTC CONFIRMATION PROCEDURE

1. Press push-button ignition switch under the following condition.
- Brake pedal: Not depressed
2. Release push-button ignition switch and wait 100 seconds or more.
3. Check DTC in “Self Diagnostic Result” mode of “BCM” using CONSULT.

Is DTC detected?

YES >> Go to SEC-76, "Diagnosis Procedure".
NO >> INSPECTION END

Diagnosis Procedure

INFOID:0000000012406112

1.CHECK PUSH-BUTTON IGNITION SWITCH INPUT SIGNAL

1. Turn ignition switch OFF.
2. Disconnect push-button ignition switch connector.
3. Check voltage between push-button ignition switch harness connector and ground.

(+)		(–)	Voltage (V) (Approx.)
Push-button ignition switch			
Connector	Terminal		
M101	4	Ground	9 - 16

Is the inspection result normal?

YES >> GO TO 4.
NO >> GO TO 2.

2.CHECK PUSH-BUTTON IGNITION SWITCH CIRCUIT

1. Disconnect BCM connector and IPDM E/R connector.
2. Check continuity between push-button ignition switch harness connector and BCM harness connector.

Push-button ignition switch		BCM		Continuity
Connector	Terminal	Connector	Terminal	
M101	4	M124	76	Existed

3. Check continuity between push-button ignition switch harness connector and ground.

Push-button ignition switch		Ground	Continuity
Connector	Terminal		
M101	4		Not existed

Is the inspection result normal?

YES >> GO TO 3.
NO >> Repair or replace harness.

3.REPLACE BCM

1. Replace BCM. Refer to BCS-99, "Removal and Installation".
2. Perform initialization of BCM and registration of all Intelligent Keys using CONSULT.

>> INSPECTION END

4.CHECK PUSH-BUTTON IGNITION SWITCH GROUND CIRCUIT

Check continuity between push-button ignition switch harness connector and ground.

Push-button ignition switch		Ground	Continuity
Connector	Terminal		
M101	1		Existed

Is the inspection result normal?

YES >> GO TO 5.
NO >> Repair or replace harness.

5.CHECK PUSH-BUTTON IGNITION SWITCH

Refer to SEC-77, "Component Inspection".

Is the inspection result normal?

YES >> GO TO 6.
NO >> Replace push-button ignition switch. Refer to SEC-134, "Removal and Installation".

6.CHECK INTERMITTENT INCIDENT

Refer to GI-41, "Intermittent Incident".

>> INSPECTION END

Component Inspection

INFOID:0000000012406113

1.CHECK PUSH-BUTTON IGNITION SWITCH

1. Turn ignition switch OFF.
2. Disconnect push-button ignition switch connector.
3. Check continuity between push-button ignition switch terminals.

Push-button ignition switch		Condition		Continuity
Terminal				
1	4	Push-button ignition switch	Pressed	Existed
			Not pressed	Not existed

Is the inspection result normal?

YES >> INSPECTION END
NO >> Replace push-button ignition switch. Refer to SEC-134, "Removal and Installation".

B2557 VEHICLE SPEED

DTC Logic

INFOID:0000000012406114

DTC DETECTION LOGIC

NOTE:

- If DTC B2557 is displayed with DTC U1000, first perform the trouble diagnosis for DTC U1000. Refer to BCS-88, "DTC Logic".
- If DTC B2557 is displayed with DTC U1010, first perform the trouble diagnosis for DTC U1010. Refer to BCS-89, "DTC Logic".

DTC No.	Trouble diagnosis name	DTC detecting condition	Possible causes
B2557	VEHICLE SPEED	BCM detects one of the following conditions for 10 seconds continuously. • Vehicle speed signal from combination meter is 10 km/h (6.2 MPH) or more, and vehicle speed signal from ABS actuator and electric unit (control unit) is 4 km/h (2.5 MPH) or less. • Vehicle speed signal from combination meter is 4 km/h (2.5 MPH) or less, and vehicle speed signal from ABS actuator and electric unit (control unit) is 10 km/h (6.2 MPH) or more.	• Harness or connectors (The CAN communication line is open or shorted.) • Combination meter • ABS actuator and electric unit (control unit)

DTC CONFIRMATION PROCEDURE

1.PERFORM DTC CONFIRMATION PROCEDURE

1. Start engine and wait 10 seconds or more.
2. Drive the vehicle at a vehicle speed of 10 km/h (6.2 MPH) or more for 10 seconds or more.
3. Check DTC in “Self Diagnostic Result” mode of “BCM” using CONSULT.

Is DTC detected?

YES >> Go to SEC-78, "Diagnosis Procedure".
NO >> INSPECTION END

Diagnosis Procedure

INFOID:0000000012406115

1.CHECK DTC OF “ABS ACTUATOR AND ELECTRIC UNIT (CONTROL UNIT)”

Check DTC in “Self Diagnostic Result” mode of “ABS” using CONSULT.

Is DTC detected?

YES >> Perform the trouble diagnosis related to the detected DTC. Refer to BRC-38, "DTC Index".
NO >> GO TO 2.

2.CHECK DTC OF “COMBINATION METER”

Check DTC in “Self Diagnostic Result” mode of “METER/M&A” using CONSULT.

Is DTC detected?

YES >> Perform the trouble diagnosis related to the detected DTC. Refer to MWI-49, "DTC Index".
NO >> GO TO 3.

3.CHECK INTERMITTENT INCIDENT

Refer to GI-41, "Intermittent Incident".

>> INSPECTION END

B2601 SHIFT POSITION

DTC Logic

INFOID:0000000012406116

DTC DETECTION LOGIC

NOTE:

- If DTC B2601 is displayed with DTC U1000, first perform the trouble diagnosis for DTC U1000. Refer to BCS-88, "DTC Logic".
- If DTC B2601 is displayed with DTC U1010, first perform the trouble diagnosis for DTC U1010. Refer to BCS-89, "DTC Logic".

DTC No.	Trouble diagnosis name	DTC detecting condition	Possible cause
B2601	SHIFT POSITION	When there is a difference between P range signal from CVT shift selector (detention switch) and P position signal from IPDM E/R (CAN).	• Harness or connectors (CAN communication line is open or shorted.) • Harness or connectors [CVT shift selector (detention switch) circuit is open or shorted.] • BCM • IPDM E/R

DTC CONFIRMATION PROCEDURE

1.PERFORM DTC CONFIRMATION PROCEDURE

1. Shift the selector lever to the P position.
2. Turn ignition switch ON and wait 2 seconds or more.
3. Shift the selector lever to any position other than P, and wait 2 seconds or more.
4. Check DTC in “Self Diagnostic Result” mode of “BCM” using CONSULT.

Is DTC detected?

YES >> Go to SEC-79, "Diagnosis Procedure".
NO >> INSPECTION END

Diagnosis Procedure

INFOID:0000000012406117

1.CHECK CVT SHIFT SELECTOR CIRCUIT (IPDM E/R)

1. Turn ignition switch OFF.
2. Disconnect CVT shift selector (detention switch) connector.
3. Disconnect IPDM E/R connector.
4. Check continuity between CVT shift selector (detention switch) harness connector and IPDM E/R harness connector.

CVT shift selector (detention switch)		IPDM E/R		Continuity
Connector	Terminal	Connector	Terminal	
M57	9	E11	43	Existed

Is the inspection result normal?

YES >> GO TO 2.
NO >> Repair or replace harness.

2.CHECK CVT SHIFT SELECTOR CIRCUIT (BCM)

1. Disconnect BCM connector.
2. Check continuity between CVT shift selector (detention switch) harness connector and BCM harness connector.

CVT shift selector (detention switch)		BCM		Continuity
Connector	Terminal	Connector	Terminal	
M57	9	M121	37	Existed

3. Check continuity between CVT shift selector (detention switch) harness connector and ground.

CVT shift selector (detention switch)		Ground	Continuity
Connector	Terminal		
M57	9		Not existed

Is the inspection result normal?

YES >> GO TO 3.
NO >> Repair or replace harness.

3.REPLACE BCM

1. Replace BCM. Refer to BCS-99, "Removal and Installation".
2. Perform initialization of BCM and registration of all Intelligent Keys using CONSULT.
3. Perform DTC CONFIRMATION PROCEDURE for DTC B2601. Refer to SEC-79, "DTC Logic".

Is DTC B2601 detected again?

YES >> Replace IPDM E/R. Refer to PCS-34, "Removal and Installation".
NO >> INSPECTION END

B2602 SHIFT POSITION

DTC Logic

INFOID:0000000012406118

DTC DETECTION LOGIC

NOTE:

- If DTC B2602 is displayed with DTC U1000, first perform the trouble diagnosis for DTC U1000. Refer to BCS-88, "DTC Logic".
- If DTC B2602 is displayed with DTC U1010, first perform the trouble diagnosis for DTC U1010. Refer to BCS-89, "DTC Logic".

DTC No.	Trouble diagnosis name	DTC detecting condition	Possible cause
B2602	SHIFT POSITION	BCM detects the following status for 10 seconds. • Selector lever is in the P position • Vehicle speed is 4 km/h (2.5 MPH) or more • Ignition switch is in the ON position	• Harness or connectors (CAN communication line is open or shorted.) • Harness or connectors [CVT shift selector (detention switch) circuit is open or shorted.] • CVT shift selector (detention switch) • Combination meter • BCM

DTC CONFIRMATION PROCEDURE

1.PERFORM DTC CONFIRMATION PROCEDURE

1. Start engine.
2. Drive vehicle at a speed of 4 km/h (2.5 MPH) or more for 10 seconds or more.
3. Check DTC in “Self Diagnostic Result” mode of “BCM” using CONSULT.

Is DTC detected?

YES >> Go to SEC-81, "Diagnosis Procedure".
NO >> INSPECTION END

Diagnosis Procedure

INFOID:0000000012406119

1.CHECK DTC OF “ABS ACTUATOR AND ELECTRIC UNIT (CONTROL UNIT)”

Check DTC in “Self Diagnostic Result” mode of “ABS” using CONSULT.

Is DTC detected?

YES >> Perform the trouble diagnosis related to the detected DTC. Refer to BRC-38, "DTC Index".
NO >> GO TO 2.

2.CHECK DTC OF COMBINATION METER

Check DTC in “Self Diagnostic Result” mode of “METER/M&A” using CONSULT.

Is DTC detected?

YES >> Perform the trouble diagnosis related to the detected DTC. Refer to MWI-49, "DTC Index".
NO >> GO TO 3.

3.CHECK CVT SHIFT SELECTOR POWER SUPPLY

1. Turn ignition switch OFF.
2. Disconnect CVT shift selector (detention switch) connector.
3. Check voltage between CVT shift selector (detention switch) harness connector and ground.

(+)		(–)	Voltage (V) (Approx.)
CVT shift selector (detention switch)			
Connector	Terminal		
M57	8	Ground	9 - 16

Is the inspection result normal?

YES >> GO TO 6.

NO >> GO TO 4.

4. CHECK CVT SHIFT SELECTOR POWER SUPPLY CIRCUIT

1. Disconnect BCM connector.
2. Check continuity between CVT shift selector (detention switch) harness connector and BCM harness connector.

CVT shift selector (detention switch)		BCM		Continuity
Connector	Terminal	Connector	Terminal	
M57	8	M124	104	Existed

3. Check continuity between CVT shift selector (detention switch) harness connector and ground.

CVT shift selector (detention switch)		Ground	Continuity
Connector	Terminal		
M57	8		Not existed

Is the inspection result normal?

YES >> GO TO 5.
NO >> Repair or replace harness.

5. REPLACE BCM

1. Replace BCM. Refer to BCS-99, "Removal and Installation".
2. Perform initialization of BCM and registration of all Intelligent Keys using CONSULT.

>> INSPECTION END

6. CHECK CVT SHIFT SELECTOR CIRCUIT

1. Disconnect BCM connector and IPDM E/R connector.
2. Check continuity between CVT shift selector (detention switch) harness connector and BCM harness connector.

CVT shift selector (detention switch)		BCM		Continuity
Connector	Terminal	Connector	Terminal	
M57	9	M121	37	Existed

3. Check continuity between CVT shift selector (detention switch) harness connector and ground.

CVT shift selector (detention switch)		Ground	Continuity
Connector	Terminal		
M57	9		Not existed

Is the inspection result normal?

YES >> GO TO 7.
NO >> Repair or replace harness.

7. CHECK CVT SHIFT SELECTOR (DETENTION SWITCH)

Refer to SEC-83, "Component Inspection".

Is the inspection result normal?

YES >> GO TO 8.
NO >> Replace CVT shift selector. Refer to TM-187, "Removal and Installation".

8. CHECK INTERMITTENT INCIDENT

Refer to GI-41, "Intermittent Incident".

>> INSPECTION END

Component Inspection

INFOID:0000000012406120

1. CHECK CVT SHIFT SELECTOR (DETENTION SWITCH)

1. Turn ignition switch OFF.
2. Disconnect CVT shift selector connector.
3. Check continuity between CVT shift selector (detention switch) terminals.

CVT shift selector (detention switch) Terminal		Condition		Continuity
8	9	Selector lever: P position	Selector button: Released	Not existed
			Selector button: Pressed	Existed
		Selector lever: Except P position		

Is the inspection result normal?

YES >> INSPECTION END
NO >> Replace CVT shift selector. Refer to TM-187, "Removal and Installation".

B2603 SHIFT POSITION

DTC Logic

INFOID:0000000012406121

DTC DETECTION LOGIC

NOTE:

- If DTC B2603 is displayed with DTC B2601, first perform the trouble diagnosis for DTC B2601. Refer to SEC-79, "DTC Logic".

DTC No.	Trouble diagnosis name	DTC detecting condition	Possible causes
B2603	SHIFT POSI STATUS	BCM detects the following status when ignition switch is in the ON position. • P/N position signal from transmission range switch: approx. 0 V (Other than P/N position) • CVT shift selector (detention switch) signal: approx. 0 V (P position)	• Harness or connector [CVT shift selector (detention switch) circuit is open or shorted.] • Harness or connectors (Transmission range switch circuit is open or shorted.) • CVT shift selector (detention switch) • BCM

DTC CONFIRMATION PROCEDURE

1.PERFORM DTC CONFIRMATION PROCEDURE 1

1. Shift the selector lever to the P position.
2. Turn ignition switch ON and wait 1 second or more.
3. Check DTC in “Self Diagnostic Result” mode of “BCM” using CONSULT.

Is DTC detected?

YES >> Go to SEC-84, "Diagnosis Procedure".
NO >> GO TO 2.

2.PERFORM DTC CONFIRMATION PROCEDURE 2

1. Shift the selector lever to any position other than P, and wait 1 second or more.
2. Check DTC in “Self Diagnostic Result” mode of “BCM” using CONSULT.

Is DTC detected?

YES >> Go to SEC-84, "Diagnosis Procedure".
NO >> INSPECTION END

Diagnosis Procedure

INFOID:0000000012406122

1.INSPECTION START

Perform inspection in accordance with procedure that confirms DTC.

Which procedure confirms DTC?

DTC confirmation procedure 1>>GO TO 2.
DTC confirmation procedure 2>>GO TO 9.

2.CHECK FUSE

1. Turn power switch OFF.
2. Check that the following fuse in IPDM E/R is not blown (open).

Signal name	Fuse No.
Ignition power supply	42 (10A)

Is the fuse blown (open)?

YES >> Replace the blown (open) fuse after repairing the affected circuit if a fuse is blown (open).
NO >> GO TO 3.

3.CHECK TRANSMISSION RANGE SWITCH POWER SUPPLY

1. Disconnect transmission range switch connector.
2. Turn ignition switch ON.
3. Check voltage between transmission range switch harness connector and ground.

(+)		(-)	Voltage
Transmission range switch			
Connector	Terminal		
F17	1	Ground	6 - 16 V

Is the inspection result normal?

YES >> GO TO 5.
NO >> GO TO 4.

4. CHECK TRANSMISSION RANGE SWITCH POWER SUPPLY CIRCUIT

1. Turn ignition switch OFF.
2. Disconnect IPDM E/R connector.
3. Check continuity between transmission range switch harness connector and IPDM E/R harness connector.

Transmission range switch		IPDM E/R		Continuity
Connector	Terminal	Connector	Terminal	
F17	1	F12	74	Existed

4. Check continuity between transmission range switch harness connector and ground.

Transmission range switch		Ground	Continuity
Connector	Terminal		
F17	1		Not existed

Is the inspection result normal?

YES >> Replace IPDM E/R. Refer to PCS-34, "Removal and Installation".
NO >> Repair or replace harness.

5. CHECK BCM INPUT SIGNAL

1. Turn ignition switch OFF.
2. Connect transmission range switch connector.
3. Disconnect BCM connector.
4. Turn ignition switch ON.
5. Check voltage between BCM harness connector and ground.

(+)		(–)	Condition		Voltage (V) (Approx.)
BCM					
Connector	Terminal				
M124	102	Ground	Selector lever	P or N position	9 - 16
				Other than above	0 - 1.5

Is the inspection result normal?

YES >> GO TO 8.
NO >> GO TO 6.

6. CHECK BCM INPUT SIGNAL CIRCUIT

1. Turn ignition switch OFF.
2. Disconnect transmission range switch connector.
3. Check continuity between BCM harness connector and transmission range switch.

Transmission range switch		BCM		Continuity
Connector	Terminal	Connector	Terminal	
F17	2	M124	102	Existed

4. Check continuity between transmission range switch harness connector and ground.

Transmission range switch		Ground	Continuity
Connector	Terminal		
F17	2		Not existed

Is the inspection result normal?

YES >> GO TO 7.
NO >> Repair or replace harness.

7.CHECK TRANSMISSION RANGE SWITCH

Refer to SEC-87, "Component Inspection (Transmission Range Switch)".

Is the inspection result normal?

YES >> GO TO 14.
NO >> Replace transmission assembly. Refer to TM-215, "Removal and Installation".

8.REPLACE BCM

1. Replace BCM. Refer to BCS-99, "Removal and Installation".
2. Perform initialization of BCM and registration of all Intelligent Keys using CONSULT.

>> INSPECTION END

9.CHECK CVT SHIFT SELECTOR POWER SUPPLY

1. Turn ignition switch OFF.
2. Disconnect CVT shift selector (detention switch) connector.
3. Check voltage between CVT shift selector (detention switch) harness connector and ground.

(+)		(–)	Voltage (V) (Approx.)
CVT shift selector (detention switch)			
Connector	Terminal		
M57	8	Ground	9 - 16

Is the inspection result normal?

YES >> GO TO 12.
NO >> GO TO 10.

10.CHECK CVT SHIFT SELECTOR POWER SUPPLY CIRCUIT

1. Disconnect BCM connector.
2. Check continuity between CVT shift selector (detention switch) harness connector and BCM harness connector.

CVT shift selector (detention switch)		BCM		Continuity
Connector	Terminal	Connector	Terminal	
M57	8	M124	104	Existed

3. Check continuity between CVT shift selector (detention switch) harness connector and ground.

CVT shift selector (detention switch)		Ground	Continuity
Connector	Terminal		
M57	8		Not existed

Is the inspection result normal?

YES >> GO TO 11.
NO >> Repair or replace harness.

11.REPLACE BCM

1. Replace BCM. Refer to BCS-99, "Removal and Installation".
2. Perform initialization of BCM and registration of all Intelligent Keys using CONSULT.

>> INSPECTION END

12. CHECK CVT SHIFT SELECTOR CIRCUIT

1. Check continuity between CVT shift selector (detention switch) harness connector and BCM harness connector.

CVT shift selector (detention switch)		BCM		Continuity
Connector	Terminal	Connector	Terminal	
M57	9	M121	37	Existed

2. Check continuity between CVT shift selector (detention switch) harness connector and ground.

CVT shift selector (detention switch)		Ground	Continuity
Connector	Terminal		
M57	9		Not existed

Is the inspection result normal?

YES >> GO TO 13.
NO >> Repair or replace harness.

13. CHECK CVT SHIFT SELECTOR (DETENTION SWITCH)

Refer to SEC-87, "Component Inspection [CVT Shift Selector (Detention Switch)]".

Is the inspection result normal?

YES >> GO TO 14.
NO >> Replace CVT shift selector. Refer to TM-187, "Removal and Installation".

14. CHECK INTERMITTENT INCIDENT

Refer to GI-41, "Intermittent Incident".

>> INSPECTION END

Component Inspection (Transmission Range Switch)

INFOID:0000000012406123

1. CHECK TRANSMISSION RANGE SWITCH

1. Turn ignition switch OFF.
2. Disconnect transmission range switch connector.
3. Check continuity between transmission range switch terminals.

Transmission range switch		Condition	Continuity
Terminal			
1	2	P or N position	Existed
		Other than above	Not existed

Is the inspection result normal?

YES >> INSPECTION END
NO >> Replace transmission assembly. Refer to TM-215, "Removal and Installation".

Component Inspection [CVT Shift Selector (Detention Switch)]

INFOID:0000000012406124

1. CHECK CVT SHIFT SELECTOR (DETENTION SWITCH)

1. Turn ignition switch OFF.
2. Disconnect CVT shift selector connector.
3. Check continuity between CVT shift selector (detention switch) terminals.

CVT shift selector (detention switch)		Condition		Continuity
Terminal				
8	9	Selector lever: P position	Selector button: Released	Not existed
			Selector button: Pressed	Existed
		Selector lever: Except P position		

Is the inspection result normal?

YES >> INSPECTION END
NO >> Replace CVT shift selector. Refer to TM-187, "Removal and Installation".

B2604 SHIFT POSITION

DTC Logic

INFOID:0000000012406125

DTC DETECTION LOGIC

NOTE:

- If DTC B2604 is displayed with DTC U1000, first perform the trouble diagnosis for DTC U1000. Refer to BCS-88, "DTC Logic".
- If DTC B2604 is displayed with DTC U1010, first perform the trouble diagnosis for DTC U1010. Refer to BCS-89, "DTC Logic".

DTC No.	Trouble diagnosis name	DTC detecting condition	Possible cause
B2604	PNP/CLUTCH SW	The following states are detected for 5 seconds while ignition switch is ON. • P/N position signal is sent from transmission range switch but shift position signal input (CAN) from TCM is other than P and N • P/N position signal is not sent from transmission range switch but shift position signal input (CAN) from TCM is P or N	• Harness or connectors (CAN communication line is open or shorted.) • Harness or connectors (transmission range switch circuit is open or shorted.) • Transmission range switch • BCM

DTC CONFIRMATION PROCEDURE

1.PERFORM DTC CONFIRMATION PROCEDURE

1. Shift the selector lever to the P position.
2. Turn ignition switch ON and wait 5 seconds or more.
3. Shift the selector lever to the N position and wait 5 seconds or more.
4. Shift the selector lever to any position other than P and N, and wait 5 seconds or more.
5. Check DTC in “Self Diagnostic Result” mode of “BCM” using CONSULT.

Is DTC detected?

YES >> Go to SEC-89, "Diagnosis Procedure".
NO >> INSPECTION END

Diagnosis Procedure

INFOID:0000000012406126

1.CHECK DTC OF TCM

Check DTC in “Self Diagnostic Result” mode of “TCM” using CONSULT.

Is DTC detected?

YES >> Perform the trouble diagnosis related to the detected DTC. Refer to TM-59, "DTC Index".
NO >> GO TO 2.

2.CHECK FUSE

1. Turn ignition switch OFF.
2. Check that the following fuse in IPDM E/R is not blown (open).

Signal name	Fuse No.
Ignition power supply	42 (10A)

Is the fuse blown (open)?

YES >> Replace the blown (open) fuse after repairing the affected circuit if a fuse is blown (open).
NO >> GO TO 3.

3.CHECK TRANSMISSION RANGE SWITCH POWER SUPPLY

1. Disconnect transmission range switch connector.
2. Turn ignition switch ON.
3. Check voltage between transmission range switch harness connector and ground.

(+)		(-)	Voltage
Transmission range switch			
Connector	Terminal		
F17	1	Ground	6 - 16 V

Is the inspection result normal?

YES >> GO TO 5.
NO >> GO TO 4.

4. CHECK TRANSMISSION RANGE SWITCH POWER SUPPLY CIRCUIT

1. Turn ignition switch OFF.
2. Disconnect IPDM E/R connector.
3. Check continuity between transmission range switch harness connector and IPDM E/R harness connector.

Transmission range switch		IPDM E/R		Continuity
Connector	Terminal	Connector	Terminal	
F17	1	F12	74	Existed

4. Check continuity between transmission range switch harness connector and ground.

Transmission range switch		Ground	Continuity
Connector	Terminal		
F17	1		Not existed

Is the inspection result normal?

YES >> Replace IPDM E/R. Refer to PCS-34, "Removal and Installation".
NO >> Repair or replace harness.

5. CHECK BCM INPUT SIGNAL

1. Turn ignition switch ON.
2. Check voltage between BCM harness connector and ground.

(+)		(–)	Condition		Voltage (V) (Approx.)
BCM					
Connector	Terminal				
M124	102	Ground	Selector lever	P or N position	9 - 16
				Other than above	0 - 1.5

Is the inspection result normal?

YES >> GO TO 6.
NO >> GO TO 7.

6. REPLACE BCM

1. Replace BCM. Refer to BCS-99, "Removal and Installation".
2. Perform initialization of BCM and registration of all Intelligent Keys using CONSULT.

>> INSPECTION END

7. CHECK BCM INPUT SIGNAL CIRCUIT

1. Turn ignition switch OFF.
2. Disconnect transmission range switch connector.
3. Disconnect BCM connector.
4. Check continuity between transmission range switch harness connector and BCM harness connector.

Transmission range switch		BCM		Continuity
Connector	Terminal	Connector	Terminal	
F17	2	M124	102	Existed

5. Check continuity between BCM harness connector and ground.

BCM		Ground	Continuity
Connector	Terminal		
M124	102		Not existed

Is the inspection result normal?

YES >> GO TO 8.
NO >> Repair or replace harness.

8.CHECK TRANSMISSION RANGE SWITCH

Refer to SEC-91, "Component Inspection (Transmission Range Switch)".

Is the inspection result normal?

YES >> GO TO 9.
NO >> Replace transmission assembly. Refer to TM-215, "Removal and Installation".

9.CHECK INTERMITTENT INCIDENT

Refer to GI-41, "Intermittent Incident".

>> INSPECTION END

Component Inspection (Transmission Range Switch)

INFOID:0000000012406127

1.CHECK TRANSMISSION RANGE SWITCH

1. Turn ignition switch OFF.
2. Disconnect transmission range switch connector.
3. Check continuity between transmission range switch terminals.

Transmission range switch		Condition	Continuity
Terminal			
1	2	P or N position	Existed
		Other than above	Not existed

Is the inspection result normal?

YES >> INSPECTION END
NO >> Replace transmission assembly. Refer to TM-215, "Removal and Installation".

B2605 SHIFT POSITION

DTC Logic

INFOID:0000000012406128

DTC DETECTION LOGIC

NOTE:

- If DTC B2605 is displayed with DTC U1000, first perform the trouble diagnosis for DTC U1000. Refer to BCS-88, "DTC Logic".
- If DTC B2605 is displayed with DTC U1010, first perform the trouble diagnosis for DTC U1010. Refer to BCS-89, "DTC Logic".

DTC No.	Trouble diagnosis name	DTC detecting condition	Possible cause
B2605	PNP/CLUTCH SW	When ignition switch is ON, P/N position signal input from transmission range switch and P/N position signal input (CAN) from IPDM E/R do not match.	• Harness or connectors (CAN communication line is open or shorted.) • Harness or connectors (transmission range switch circuit is open or shorted.) • Transmission range switch • IPDM E/R • BCM

DTC CONFIRMATION PROCEDURE

1.PERFORM DTC CONFIRMATION PROCEDURE

1. Shift the selector lever to the P position.
2. Turn ignition switch ON and wait 1 second or more.
3. Shift the selector lever to the N position and wait 1 second or more.
4. Shift the selector lever to any position other than P and N, and wait 1 second or more.
5. Check DTC in “Self Diagnostic Result” mode of “BCM” using CONSULT.

Is DTC detected?

YES >> Go to SEC-92, "Diagnosis Procedure".
NO >> INSPECTION END

Diagnosis Procedure

INFOID:0000000012406129

1.CHECK FUSE

1. Turn ignition switch OFF.
2. Check that the following fuse in IPDM E/R is not blown (open).

Signal name	Fuse No.
Ignition power supply	42 (10A)

Is the fuse blown (open)?

YES >> Replace the blown (open) fuse after repairing the affected circuit if a fuse is blown (open).
NO >> GO TO 2.

2.CHECK TRANSMISSION RANGE SWITCH POWER SUPPLY

1. Disconnect transmission range switch connector.
2. Turn ignition switch ON.
3. Check voltage between transmission range switch harness connector and ground.

(+)		(-)	Voltage
Transmission range switch			
Connector	Terminal		
F17	1	Ground	6 - 16 V

Is the inspection result normal?

YES >> GO TO 4.

NO >> GO TO 3.

3. CHECK TRANSMISSION RANGE SWITCH POWER SUPPLY CIRCUIT

1. Turn ignition switch OFF.
2. Disconnect IPDM E/R connector.
3. Check continuity between transmission range switch harness connector and IPDM E/R harness connector.

Transmission range switch		IPDM E/R		Continuity
Connector	Terminal	Connector	Terminal	
F17	1	F12	74	Existed

4. Check continuity between transmission range switch harness connector and ground.

Transmission range switch		Ground	Continuity
Connector	Terminal		
F17	1		Not existed

Is the inspection result normal?

YES >> Replace IPDM E/R. Refer to PCS-34, "Removal and Installation".
NO >> Repair or replace harness.

4. CHECK IPDM E/R INPUT SIGNAL

1. Connect transmission range switch connector.
2. Disconnect IPDM E/R connector.
3. Turn ignition switch ON.
4. Check voltage between IPDM E/R harness connector and ground.

(+)		(–)	Condition		Voltage (V) (Approx.)
IPDM E/R					
Connector	Terminal				
F12	72	Ground	Selector lever	P or N position	9 - 16
				Other than above	0 - 1.5

Is the inspection result normal?

YES >> GO TO 8.
NO >> GO TO 5.

5. CHECK IPDM E/R INPUT SIGNAL CIRCUIT

1. Turn ignition switch OFF.
2. Disconnect transmission range switch connector.
3. Check continuity between IPDM E/R harness connector and transmission range switch harness connector.

IPDM E/R		Transmission range switch		Continuity
Connector	Terminal	Connector	Terminal	
F12	72	F17	2	Existed

4. Check continuity between transmission range switch harness connector and ground.

Transmission range switch		Ground	Continuity
Connector	Terminal		
F17	2		Not existed

Is the inspection result normal?

YES >> GO TO 6.
NO >> Repair or replace harness.

6. CHECK BCM INPUT SIGNAL CIRCUIT

1. Disconnect BCM connector.
2. Check continuity between IPDM E/R harness connector and BCM harness connector.

IPDM E/R		BCM		Continuity
Connector	Terminal	Connector	Terminal	
E10	30	M124	102	Existed

3. Check continuity between BCM harness connector and ground.

BCM		Ground	Continuity
Connector	Terminal		
M124	102		Not existed

Is the inspection result normal?

YES >> GO TO 7.
NO >> Repair or replace harness.

7.REPLACE BCM

1. Replace BCM. Refer to BCS-99, "Removal and Installation".
2. Perform initialization of BCM and registration of all Intelligent Keys using CONSULT.
3. Perform DTC CONFIRMATION PROCEDURE for B2605. Refer to SEC-92, "DTC Logic".

Is DTC B2605 detected again?

YES >> Replace IPDM E/R. Refer to PCS-34, "Removal and Installation".
NO >> INSPECTION END

8.CHECK INTERMITTENT INCIDENT

Refer to GI-41, "Intermittent Incident".

>> INSPECTION END

B2608 STARTER RELAY

DTC Logic

INFOID:0000000012406130

DTC DETECTION LOGIC

NOTE:

- If DTC B2608 is displayed with DTC U1000, first perform the trouble diagnosis for DTC U1000. Refer to BCS-88, "DTC Logic".
- If DTC B2608 is displayed with DTC U1010, first perform the trouble diagnosis for DTC U1010. Refer to BCS-89, "DTC Logic".
- If DTC B2608 is displayed with DTC B210D (IPDM E/R), first perform the trouble diagnosis for DTC B210D. Refer to SEC-116, "DTC Logic".

DTC No.	Trouble diagnosis name	DTC detecting condition	Possible cause
B2608	STARTER RELAY	BCM outputs starter relay OFF signal but BCM receives starter relay ON signal from IPDM E/R (CAN).	• Harness or connectors (CAN communication line is open or shorted.) • Harness or connectors (Starter relay circuit is open or shorted.) • IPDM E/R

DTC CONFIRMATION PROCEDURE

1.PERFORM DTC CONFIRMATION PROCEDURE

1. Press push-button ignition switch under the following conditions to start engine.
- Selector lever: In the P position
- Brake pedal: Depressed
2. Wait 1 second after engine started.
3. Check DTC in “Self Diagnostic Result” mode of “BCM” using CONSULT.

Is DTC detected?

YES >> Go to SEC-95, "Diagnosis Procedure".
NO >> INSPECTION END

Diagnosis Procedure

INFOID:0000000012406131

1.CHECK DTC OF IPDM E/R

Check DTC in “Self Diagnostic Result” mode of “IPDM E/R” using CONSULT.

Is DTC detected?

YES >> Perform the trouble diagnosis related to the detected DTC. Refer to PCS-23, "DTC Index".
NO >> GO TO 2.

2.CHECK STARTER RELAY CIRCUIT

1. Turn ignition switch OFF.
2. Disconnect IPDM E/R connector.
3. Disconnect BCM connector.
4. Check continuity between IPDM E/R harness connector and BCM harness connector.

IPDM E/R		BCM		Continuity
Connector	Terminal	Connector	Terminal	
E11	46	M124	97	Existed

5. Check continuity between IPDM E/R harness connector and ground.

IPDM E/R		Ground	Continuity
Connector	Terminal		
E11	46		Not existed

Is the inspection result normal?

YES >> GO TO 3.
NO >> Repair or replace harness.

3. REPLACE IPDM E/R

1. Replace IPDM E/R. Refer to PCS-34, "Removal and Installation".
2. Perform DTC CONFIRMATION PROCEDURE for DTC B2608. Refer to SEC-95, "DTC Logic".

Is DTC B2608 detected again?

YES >> INSPECTION END
NO >> GO TO 4.

4. REPLACE BCM

1. Replace BCM. Refer to BCS-99, "Removal and Installation".
2. Perform initialization of BCM and registration of all Intelligent Keys using CONSULT.

>> INSPECTION END

B260F ENGINE STATUS

Description

INFOID:0000000012406132

BCM receives the engine status signal from ECM via CAN communication.

DTC Logic

INFOID:0000000012406133

DTC DETECTION LOGIC

NOTE:

- If DTC B260F is displayed with DTC U1000, first perform the trouble diagnosis for DTC U1000. Refer to BCS-88, "DTC Logic".
- If DTC B260F is displayed with DTC U1010, first perform the trouble diagnosis for DTC U1010. Refer to BCS-89, "DTC Logic".

DTC No.	Trouble diagnosis name	DTC detecting condition	Possible cause
B260F	ENG STATE SIG LOST	BCM has not yet received the engine status signal from ECM when ignition switch is in the ON position.	• Harness or connectors (CAN communication line is open or shorted.) • ECM

DTC CONFIRMATION PROCEDURE

1.PERFORM DTC CONFIRMATION PROCEDURE

1. Turn ignition switch ON and wait 2 seconds or more.
2. Check DTC in “Self Diagnostic Result” mode of “BCM” using CONSULT.

Is DTC detected?

YES >> Go to SEC-97, "Diagnosis Procedure".
NO >> INSPECTION END

Diagnosis Procedure

INFOID:0000000012406134

1.INSPECTION START

1. Turn ignition switch ON.
2. Select “Self Diagnostic Result” mode of “BCM” using CONSULT.
3. Touch “ERASE”.
4. Perform DTC CONFIRMATION PROCEDURE for DTC B260F. Refer to SEC-97, "DTC Logic".

Is DTC detected?

YES >> GO TO 2.
NO >> INSPECTION END

2.REPLACE ECM

Replace ECM.
Refer to EC-513, "Removal and Installation".

>> INSPECTION END

B261A PUSH-BUTTON IGNITION SWITCH

DTC Logic

INFOID:0000000012406135

DTC DETECTION LOGIC

NOTE:

- If DTC B261A is displayed with DTC U1000, first perform the trouble diagnosis for DTC U1000. Refer to BCS-88, "DTC Logic".
- If DTC B261A is displayed with DTC U1010, first perform the trouble diagnosis for DTC U1010. Refer to BCS-89, "DTC Logic".

DTC No.	Trouble diagnosis name	DTC detecting condition	Possible cause
B261A	PUSH-BTN IGN SW	BCM detects the mismatch between the following for 1 second or more • Push-button ignition switch operation condition judged by push switch signal • Push-button ignition switch status signal from IPDM E/R (CAN)	• Harness or connectors (Push-button ignition switch circuit is open or shorted) • IPDM E/R • BCM

DTC CONFIRMATION PROCEDURE

1.PERFORM DTC CONFIRMATION PROCEDURE

1. Press push-button ignition switch for 1 second under the following condition.
- Selector lever: In the P position
- Brake pedal: Not depressed
2. Release push-button ignition switch and wait 1 second.
3. Check DTC in “Self diagnostic result” mode of “BCM” using CONSULT.

Is DTC detected?

YES >> Go to SEC-98, "Diagnosis Procedure"
NO >> INSPECTION END

Diagnosis Procedure

INFOID:0000000012406136

1.CHECK PUSH-BUTTON IGNITION SWITCH CIRCUIT 1

1. Turn ignition switch OFF.
2. Disconnect push-button ignition switch connector.
3. Disconnect IPDM E/R connector.
4. Check continuity between push-button ignition switch harness connector and IPDM E/R harness connector.

Push-button ignition switch		IPDM E/R		Continuity
Connector	Terminal	Connector	Terminal	
M101	4	E10	28	Existed

5. Check continuity between push-button ignition switch harness connector and ground.

Push-button ignition switch		Ground	Continuity
Connector	Terminal		
M101	4		Not existed

Is the inspection result normal?

YES >> GO TO 2.
NO >> Repair harness or connector.

2.CHECK PUSH-BUTTON IGNITION SWITCH CIRCUIT 2

1. Disconnect BCM connector.
2. Check continuity between push-button ignition switch harness connector and BCM harness connector.

Push-button ignition switch		BCM		Continuity
Connector	Terminal	Connector	Terminal	
M101	4	M124	76	Existed

3. Check continuity between push-button ignition switch harness connector and ground.

Push-button ignition switch		Ground	Continuity
Connector	Terminal		
M101	4		Not existed

Is the inspection result normal?

YES >> GO TO 3.
NO >> Repair harness or connector.

3.REPLACE BCM

1. Replace BCM. Refer to BCS-99, "Removal and Installation".
2. Perform initialization of BCM and registration of all Intelligent Keys using CONSULT.
3. Perform DTC CONFIRMATION PROCEDURE for B261A. Refer to SEC-98, "DTC Logic".

Is DTC B261A detected again?

YES >> Replace IPDM E/R. Refer to PCS-34, "Removal and Installation".
NO >> INSPECTION END

B26F3 STARTER CONTROL RELAY

DTC Logic

INFOID:0000000012406137

DTC DETECTION LOGIC

NOTE:

- If DTC B26F3 is displayed with DTC U1000, first perform the trouble diagnosis for DTC U1000. Refer to BCS-88, "DTC Logic".
- If DTC B26F3 is displayed with DTC U1010, first perform the trouble diagnosis for DTC U1010. Refer to BCS-89, "DTC Logic".

DTC No.	Trouble diagnosis name	DTC detecting condition	Possible cause
B26F3	START CONT RLY ON	BCM requests IPDM E/R to turn starter control relay OFF, but BCM cannot receive starter control relay OFF state signal from IPDM E/R (CAN).	• Harness or connectors (CAN communication line is open or shorted.) • IPDM E/R

DTC CONFIRMATION PROCEDURE

1.PERFORM DTC CONFIRMATION PROCEDURE

1. Press push-button ignition switch under the following conditions to start engine.
- Selector lever: In the P position
- Brake pedal: Depressed
2. Wait 2 seconds after engine started.
3. Check DTC in “Self Diagnostic Result” mode of “BCM” using CONSULT.

Is DTC detected?

YES >> Go to SEC-100, "Diagnosis Procedure".
NO >> INSPECTION END

Diagnosis Procedure

INFOID:0000000012406138

1.CHECK DTC OF IPDM E/R

Check DTC in “Self Diagnostic Result” mode of “IPDM E/R” using CONSULT.

Is DTC detected?

YES >> Perform the diagnosis procedure related to the detected DTC. Refer to PCS-23, "DTC Index".
NO >> GO TO 2.

2.CHECK INTERMITTENT INCIDENT

Refer to GI-41, "Intermittent Incident".

>> INSPECTION END

B26F4 STARTER CONTROL RELAY

DTC Logic

INFOID:0000000012406139

DTC DETECTION LOGIC

NOTE:

- If DTC B26F4 is displayed with DTC U1000, first perform the trouble diagnosis for DTC U1000. Refer to BCS-88, "DTC Logic".
- If DTC B26F4 is displayed with DTC U1010, first perform the trouble diagnosis for DTC U1010. Refer to BCS-89, "DTC Logic".

DTC No.	Trouble diagnosis name	DTC detecting condition	Possible cause
B26F4	START CONT RELAY OFF	BCM requests IPDM E/R to turn starter control relay ON, but BCM cannot receive starter control relay ON state signal from IPDM E/R.	• Harness or connectors (CAN communication line is open or shorted.) • IPDM E/R

DTC CONFIRMATION PROCEDURE

1.PERFORM DTC CONFIRMATION PROCEDURE

1. Press push-button ignition switch under the following conditions to start engine, and wait 1 second or more.

- Selector lever: In the P position
- Brake pedal: Depressed

2. Check DTC in “Self Diagnostic Result” mode of “BCM” using CONSULT.

Is DTC detected?

YES >> Go to SEC-101, "Diagnosis Procedure".
NO >> INSPECTION END

Diagnosis Procedure

INFOID:0000000012406140

1.CHECK DTC OF IPDM E/R

Check DTC in “Self Diagnostic Result” mode of “IPDM E/R” using CONSULT.

Is DTC detected?

YES >> Perform the diagnosis procedure related to the detected DTC. Refer to PCS-23, "DTC Index".
NO >> GO TO 2.

2.CHECK INTERMITTENT INCIDENT

Refer to GI-41, "Intermittent Incident".

>> INSPECTION END

B26F7 BCM

DTC Logic

INFOID:0000000012406141

DTC DETECTION LOGIC

DTC No.	Trouble diagnosis name	DTC detecting condition	Possible cause
B26F7	BCM	Inside key antenna output circuit in BCM is malfunctioning.	BCM

DTC CONFIRMATION PROCEDURE

1.PERFORM DTC CONFIRMATION PROCEDURE

1. Press door request switch.
2. Turn ignition switch ON.
3. Check DTC in “Self Diagnostic Result” mode of “BCM” using CONSULT.

Is DTC detected?

YES >> Go to SEC-103, "Diagnosis Procedure".
NO >> INSPECTION END

Diagnosis Procedure

INFOID:0000000012406142

1.INSPECTION START

1. Turn ignition switch ON.
2. Select “Self Diagnostic Result” mode of “BCM” using CONSULT.
3. Touch “ERASE”.
4. Perform DTC CONFIRMATION PROCEDURE for DTC B26F7. Refer to SEC-102, "DTC Logic".

Is DTC detected?

YES >> GO TO 2.
NO >> INSPECTION END

2.REPLACE BCM

1. Replace BCM. Refer to BCS-99, "Removal and Installation".
2. Perform initialization of BCM and registration of all Intelligent Keys using CONSULT.

>> INSPECTION END

B26F8 BCM

DTC Logic

INFOID:0000000012406143

DTC DETECTION LOGIC

DTC No.	Trouble diagnosis name	DTC detecting condition	Possible cause
B26F8	BCM	Starter control replay control signal and feedback circuit signal (inside BCM) does not match.	BCM

DTC CONFIRMATION PROCEDURE

1.PERFORM DTC CONFIRMATION PROCEDURE

1. Turn ignition switch ON and wait 1 second.
2. Check DTC in “Self Diagnostic Result” mode of “BCM” using CONSULT.

Is DTC detected?

YES >> Go to SEC-103, "Diagnosis Procedure".
NO >> INSPECTION END

Diagnosis Procedure

INFOID:0000000012406144

1.INSPECTION START

1. Turn ignition switch ON.
2. Select “Self Diagnostic Result” mode of ”BCM” using CONSULT.
3. Touch “ERASE”.
4. Perform DTC CONFIRMATION PROCEDURE for DTC B26F8.
   Refer to SEC-103, "DTC Logic".

Is DTC detected?

YES >> GO TO 2.
NO >> INSPECTION END

2.REPLACE BCM

1. Replace BCM. Refer to BCS-99, "Removal and Installation".
2. Perform initialization of BCM and registration of all Intelligent Keys using CONSULT.

>> INSPECTION END

B26F9 CRANKING REQUEST CIRCUIT

DTC Logic

INFOID:0000000012406145

DTC DETECTION LOGIC

NOTE:

- If DTC B26F9 is displayed with DTC U1000, first perform the trouble diagnosis for DTC U1000. Refer to BCS-88, "DTC Logic".
- If DTC B26F9 is displayed with DTC U1010, first perform the trouble diagnosis for DTC U1010. Refer to BCS-89, "DTC Logic".

DTC No.	Trouble diagnosis name	DTC detecting condition	Possible cause
B26F9	CRANK REQ CIR SHORT	BCM detects that the status of the following signals does not match. • Cranking request signal from ECM • Starter control relay control signal from ECM (CAN)	• Harness or connectors (CAN communication line is open or shorted.) • Harness or connectors (Cranking request signal circuit is open or shorted.) • ECM • BCM

DTC CONFIRMATION PROCEDURE

1.PERFORM DTC CONFIRMATION

1. Perform DTC CONFIRMATION PROCEDURE for DTC P1650. Refer to EC-421, "DTC Logic".
2. Turn ignition switch ON.
3. Check DTC in “Self Diagnostic Result” mode of “BCM” using CONSULT.

Is DTC detected?

YES >> Go to SEC-104, "Diagnosis Procedure".
NO >> INSPECTION END

Diagnosis Procedure

INFOID:0000000012406146

1.CHECK CRANKING REQUEST SIGNAL

1. Turn ignition switch ON.
2. Check voltage between BCM harness connector and ground under the following conditions.

(+) BCM Connector	(+) BCM Terminal	(–)	Condition		Voltage (V) (Approx.)
M123	64	Ground	Ignition switch OFF		3.6
			Ignition switch ON	• Engine: Stopped • Selector lever position: P	0 - 1
				• Engine: Stopped • Selector lever position: Other than P	9 - 16
				Engine running	9 - 16

Is the inspection result normal?

YES >> GO TO 3.
NO >> GO TO 2.

2.CHECK CRANKING REQUEST SIGNAL CIRCUIT

1. Turn ignition switch OFF.
2. Disconnect BCM connector.
3. Disconnect ECM connector.
4. Check continuity between BCM harness connector and ECM harness connector.

BCM		ECM		Continuity
Connector	Terminal	Connector	Terminal	
M123	64	F7	8	Existed

5. Check continuity between BCM harness connector and ground.

BCM		Ground	Continuity
Connector	Terminal		
M123	64		Not existed

Is the inspection result normal?

YES >> GO TO 3.
NO >> Repair or replace harness.

3.REPLACE BCM

1. Replace BCM. Refer to BCS-99, "Removal and Installation".
2. Perform initialization of BCM and registration of all Intelligent Keys using CONSULT.
3. Perform DTC CONFIRMATION PROCEDURE for DTC B26F9. Refer to SEC-104, "DTC Logic".

Is DTC detected?

YES >> GO TO 4.
NO >> INSPECTION END

4.REPLACE ECM

Replace ECM.
Refer to EC-513, "Removal and Installation".

>> INSPECTION END

B26FA CRANKING REQUEST CIRCUIT

DTC Logic

INFOID:0000000012406147

DTC DETECTION LOGIC

NOTE:

- If DTC B26FA is displayed with DTC U1000, first perform the trouble diagnosis for DTC U1000. Refer to BCS-88, "DTC Logic".
- If DTC B26FA is displayed with DTC U1010, first perform the trouble diagnosis for DTC U1010. Refer to BCS-89, "DTC Logic".

DTC No.	Trouble diagnosis name	DTC detecting condition	Possible cause
B26FA	CRANK REQ CIR OPEN	BCM detects that the status of the following signals does not match. • Cranking request signal from ECM • Starter control relay control signal from ECM (CAN)	• Harness or connectors (CAN communication line is open or shorted.) • Harness or connectors (Cranking request signal circuit is open or shorted.) • BCM • ECM

DTC CONFIRMATION PROCEDURE

1.PERFORM DTC CONFIRMATION

1. Perform DTC CONFIRMATION PROCEDURE for DTC P1650. Refer to EC-421, "DTC Logic".
2. Turn ignition switch ON.
3. Check DTC in “Self Diagnostic Result” mode of “BCM” using CONSULT.

Is DTC detected?

YES >> Go to SEC-106, "Diagnosis Procedure".
NO >> INSPECTION END

Diagnosis Procedure

INFOID:0000000012406148

1.CHECK CRANKING REQUEST SIGNAL

1. Turn ignition switch ON.
2. Check voltage between BCM harness connector and ground under the following conditions.

(+) BCM Connector	(+) BCM Terminal	(–)	Condition		Voltage (V) (Approx.)
M123	64	Ground	Ignition switch OFF		3.6
			Ignition switch ON	• Engine: Stopped • Selector lever position: P	0 - 1
				• Engine: Stopped • Selector lever position: Other than P	9 - 16
				Engine running	9 - 16

Is the inspection result normal?

YES >> GO TO 3.
NO >> GO TO 2.

2.CHECK CRANKING REQUEST SIGNAL CIRCUIT

1. Turn ignition switch OFF.
2. Disconnect BCM connector.
3. Disconnect ECM connector.
4. Check continuity between BCM harness connector and ECM harness connector.

BCM		ECM		Continuity
Connector	Terminal	Connector	Terminal	
M123	64	F7	8	Existed

5. Check continuity between BCM harness connector and ground.

BCM		Ground	Continuity
Connector	Terminal		
M123	64		Not existed

Is the inspection result normal?

YES >> GO TO 3.
NO >> Repair or replace harness.

3.REPLACE BCM

1. Replace BCM. Refer to BCS-99, "Removal and Installation".
2. Perform initialization of BCM and registration of all Intelligent Keys using CONSULT.
3. Perform DTC CONFIRMATION PROCEDURE for DTC B26FA. Refer to SEC-106, "DTC Logic".

Is DTC detected?

YES >> GO TO 4.
NO >> INSPECTION END

4.REPLACE ECM

Replace ECM.
Refer to EC-513, "Removal and Installation".

>> INSPECTION END

B26FC KEY REGISTRATION

DTC Logic

INFOID:0000000012406149

DTC DETECTION LOGIC

DTC No.	Trouble diagnosis name	DTC detecting condition	Possible cause
B26FC	KEY REGISTRATION	Intelligent Key that does not match the vehicle is registered.	• Improper registration operation • Intelligent Key • BCM

DTC CONFIRMATION PROCEDURE

1.PERFORM DTC CONFIRMATION PROCEDURE

1. Perform initialization of BCM and registration of all Intelligent Keys using CONSULT.
2. Check DTC in “Self Diagnostic Result” mode of “BCM” using CONSULT.

Is DTC detected?

YES >> Go to SEC-108, "Diagnosis Procedure"
NO >> INSPECTION END

Diagnosis Procedure

INFOID:0000000012406150

1.REPLACE INTELLIGENT KEY

1. Prepare Intelligent Key that matches the vehicle.
2. Perform initialization of BCM and registration of Intelligent Key using CONSULT.
3. Check DTC in “Self Diagnostic Result” mode of “BCM” using CONSULT.

Is DTC detected?

YES >> GO TO 2.
NO >> INSPECTION END

2.REPLACE BCM

1. Replace BCM. Refer to BCS-99, "Removal and Installation".
2. Perform initialization of BCM and registration of all Intelligent Keys using CONSULT.

>> INSPECTION END

B209F CRANKING REQUEST CIRCUIT

DTC Logic

INFOID:0000000012406151

DTC DETECTION LOGIC

NOTE:
If DTC B209F is displayed with DTC U1000, first perform the trouble diagnosis for DTC U1000. Refer to PCS-28, "DTC Logic".

DTC No.	Trouble diagnosis name	DTC detecting condition	Possible cause
B209F	STR CUT OFF OPEN	When the following items do not match, a malfunction is detected. • Cranking request signal from ECM • Starter control relay control signal from ECM (CAN)	• Harness or connectors (CAN communication line is open or shorted.) • Harness or connectors (Cranking request signal circuit is open or shorted.) • IPDM E/R • ECM

DTC CONFIRMATION PROCEDURE

1.PERFORM DTC CONFIRMATION PROCEDURE

1. Perform DTC CONFIRMATION PROCEDURE for DTC P1650. Refer to EC-421, "DTC Logic".
2. Turn ignition switch ON.
3. Check DTC in “Self Diagnostic Result” mode of “IPDM E/R” using CONSULT.

Is DTC detected?

YES >> Refer to SEC-109, "Diagnosis Procedure".
NO >> INSPECTION END

Diagnosis Procedure

INFOID:0000000012406152

1.CHECK CRANKING REQUEST SIGNAL

1. Turn ignition switch ON.
2. Check voltage between IPDM E/R harness connector and ground under the following conditions.

(+)		(–)	Condition		Voltage (V) (Approx.)
IPDM E/R					
Connector	Terminal				
F12	71	Ground	Ignition switch OFF		3.6
			Ignition switch ON	• Engine: Stopped • Selector lever position: P	0 - 1
				• Engine: Stopped • Selector lever position: Other than P	9 - 16
				Engine running	9 -16

Is the inspection result normal?

YES >> GO TO 3.
NO >> GO TO 2.

2.CHECK CRANKING REQUEST SIGNAL CIRCUIT

1. Turn ignition switch OFF.
2. Disconnect IPDM E/R connector.
3. Disconnect ECM connector.
4. Check continuity between IPDM E/R harness connector and ECM harness connector.

IPDM E/R		ECM		Continuity
Connector	Terminal	Connector	Terminal	
F12	71	F7	8	Existed

5. Check continuity between BCM harness connector and ground.

IPDM E/R		Ground	Continuity
Connector	Terminal		
F12	71		Not existed

Is the inspection result normal?

YES >> GO TO 3.
NO >> Repair or replace harness.

3.REPLACE IPDM E/R

1. Replace IPDM E/R. Refer to PCS-34, "Removal and Installation".
2. Perform DTC CONFIRMATION PROCEDURE for DTC B209F. Refer to SEC-109, "DTC Logic".

Is DTC detected?

YES >> GO TO 4.
NO >> INSPECTION END

4.REPLACE ECM

Replace ECM.
Refer to EC-513, "Removal and Installation".

>> INSPECTION END

B20A0 CRANKING REQUEST CIRCUIT

DTC Logic

INFOID:0000000012406153

DTC DETECTION LOGIC

NOTE:
If DTC B20A0 is displayed with DTC U1000, first perform the trouble diagnosis for DTC U1000. Refer to PCS-28, "DTC Logic".

DTC No.	Trouble diagnosis name	DTC detecting condition	Possible cause
B20A0	STR CUT OFF SHORT	When the following items do not match, a malfunction is detected. • Cranking request signal from ECM • Starter control relay control signal from ECM (CAN)	• Harness or connectors (CAN communication line is open or shorted.) • Harness or connectors (Cranking request signal circuit is open or shorted.) • IPDM E/R • ECM

DTC CONFIRMATION PROCEDURE

1.PERFORM DTC CONFIRMATION PROCEDURE

1. Perform DTC CONFIRMATION PROCEDURE for DTC P1650. Refer to EC-421, "DTC Logic".
2. Turn ignition switch ON.
3. Check DTC in “Self Diagnostic Result” mode of “IPDM E/R” using CONSULT.

Is DTC detected?

YES >> Refer to SEC-111, "Diagnosis Procedure".
NO >> INSPECTION END

Diagnosis Procedure

INFOID:0000000012406154

1.CHECK CRANKING REQUEST SIGNAL

1. Turn ignition switch ON.
2. Check voltage between IPDM E/R harness connector and ground under the following conditions.

(+) IPDM E/R Connector	(+) IPDM E/R Terminal	(–)	Condition		Voltage (V) (Approx.)
F12	71	Ground	Ignition switch OFF		3.6
			Ignition switch ON	• Engine: Stopped • Selector lever position: P	0 - 1
				• Engine: Stopped • Selector lever position: Other than P	9 - 16
				Engine running	9 - 16

Is the inspection result normal?

YES >> GO TO 3.
NO >> GO TO 2.

2.CHECK CRANKING REQUEST SIGNAL CIRCUIT

1. Turn ignition switch OFF.
2. Disconnect IPDM E/R connector.
3. Disconnect ECM connector.
4. Check continuity between IPDM E/R harness connector and ECM harness connector.

IPDM E/R		ECM		Continuity
Connector	Terminal	Connector	Terminal	
F12	71	F7	8	Existed

5. Check continuity between BCM harness connector and ground.

IPDM E/R		Ground	Continuity
Connector	Terminal		
F12	71		Not existed

Is the inspection result normal?

YES >> GO TO 3.
NO >> Repair or replace harness.

3.REPLACE IPDM E/R

1. Replace IPDM E/R. Refer to PCS-34, "Removal and Installation".
2. Perform DTC CONFIRMATION PROCEDURE for DTC B20A0. Refer to SEC-111, "DTC Logic".

Is DTC detected?

YES >> GO TO 4.
NO >> INSPECTION END

4.REPLACE ECM

Replace ECM.
Refer to EC-513, "Removal and Installation".

>> INSPECTION END

B210B STARTER CONTROL RELAY

DTC Logic

INFOID:0000000012406155

DTC DETECTION LOGIC

NOTE:
If DTC B210B is displayed with DTC U1000, first perform the trouble diagnosis for DTC U1000. Refer to PCS-28, "DTC Logic".

DTC No.	Trouble diagnosis name	DTC detecting condition	Possible cause
B210B	STR CONT RLY ON CIRC	When comparing the following items, IPDM E/R detects that starter control relay is stuck in the ON position for 5 seconds or more. • Starter control relay signal (CAN) from BCM • Starter relay status signal (CAN) from BCM • Starter control relay and starter relay status signal (IPDM E/R input) • Starter control relay control signal (IPDM E/R output) • P/N position signal input • Ignition power supply No.2 signal from BCM	• Harness or connectors (CAN communication line is open or shorted. (Ignition power supply No.2 circuit is open or shorted.) • IPDM E/R • BCM

DTC CONFIRMATION PROCEDURE

1.PERFORM DTC CONFIRMATION PROCEDURE

1. Press push-button ignition switch under the following conditions to start engine, and wait 1 second or more.
- Selector lever: In the P position
- Brake pedal: Depressed
2. Check DTC in “Self Diagnostic Result” mode of “IPDM E/R” using CONSULT.

Is DTC detected?

YES >> Refer to SEC-113, "Diagnosis Procedure".
NO >> INSPECTION END

Diagnosis Procedure

INFOID:0000000012406156

1.CHECK SELF DIAGNOSTIC RESULT

Check DTC using CONSULT.

What is the display history of DTC “B210B”?

“CRNT”>> Replace IPDM E/R. Refer to PCS-34, "Removal and Installation".
“PAST” >> GO TO 2.

2.CHECK INTERMITTENT INCIDENT

Refer to GI-41, "Intermittent Incident"

>> INSPECTION END

B210C STARTER CONTROL RELAY

DTC Logic

INFOID:0000000012406157

DTC DETECTION LOGIC

NOTE:

- If DTC B210C is displayed with DTC U1000, first perform the trouble diagnosis for DTC U1000. Refer to PCS-28, "DTC Logic".
- When IPDM E/R power supply voltage is low (Approx. 7 - 8 V for about 1 second), the DTC B210C may be detected.

DTC No.	Trouble diagnosis name	DTC detecting condition	Possible cause
B210C	STR CONT RLY OFF CIRC	When comparing the following items, IPDM E/R detects that starter control relay is stuck in the OFF position for 5 seconds or more. • Starter control relay signal (CAN) from BCM • Starter relay status signal (CAN) from BCM • Starter control relay and starter relay status signal (IPDM E/R input) • Starter control relay control signal (IPDM E/R output) • P/N position signal input • Ignition power supply No.2 signal from BCM	• Harness or connectors (CAN communication line is open or shorted. (Ignition power supply No.2 circuit is open or shorted.) • IPDM E/R • BCM

DTC CONFIRMATION PROCEDURE

1.PERFORM DTC CONFIRMATION PROCEDURE

1. Press push-button ignition switch to start engine, and wait 1 second or more.
2. Check DTC in “Self Diagnostic Result” mode of “IPDM E/R” using CONSULT.

Is DTC detected?

YES >> Refer to SEC-114, "Diagnosis Procedure".
NO >> INSPECTION END

Diagnosis Procedure

INFOID:0000000012406158

1.CHECK SELF DIAGNOSTIC RESULT

Check DTC in “Self Diagnostic Result” mode of “IPDM E/R” using CONSULT.

What is the display history of DTC “B210C”?

“CRNT”>> GO TO 3.
“PAST” >> GO TO 2.

2.CHECK BATTERY VOLTAGE

Measure the battery voltage.

Which is the measurement result?

More than 12.4 V>>GO TO 5
Less than 12.4 V>>Perform battery inspection. Refer to PG-128, "How to Handle Battery".

3.CHECK P/N POSITION SIGNAL CIRCUIT VOLTAGE

1. Turn ignition switch ON
2. Selector lever is in P position.
3. Check the voltage between IPDM E/R harness connector and ground.

(+)		(-)	Voltage (Approx.)
IPDM E/R			
Connector	Terminal		
E11	46	Ground	Battery voltage

Is the inspection result normal?

YES >> Replace IPDM E/R. Refer to PCS-34, "Removal and Installation".
NO >> GO TO 4.

4. CHECK P/N POSITION SIGNAL CIRCUIT

1. Turn ignition switch OFF
2. Disconnect IPDM E/R connector and BCM connector.
3. Check continuity between IPDM E/R harness connector and BCM harness connector.

IPDM E/R		BCM		Continuity
Connector	Terminal	Connector	Terminal	
E11	46	M124	97	Existed

Is the inspection result normal?

YES >> Replace BCM. Refer to BCS-99, "Removal and Installation".
NO >> Repair or replace harness.

5. CHECK INTERMITTENT INCIDENT

Check intermittent incident. Refer to GI-41, "Intermittent Incident".

>> INSPECTION END

B210D STARTER RELAY

DTC Logic

INFOID:0000000012406159

DTC DETECTION LOGIC

NOTE:
If DTC B210D is displayed with DTC U1000, first perform the trouble diagnosis for DTC U1000. Refer to PCS-28, "DTC Logic".

DTC No.	Trouble diagnosis name	DTC detecting condition	Possible cause
B210D	STARTER RLY ON CIRC	When comparing the following items, IPDM E/R detects that starter relay is stuck in the ON position for 5 seconds or more. • Starter control relay signal (CAN) from BCM • Starter relay status signal (CAN) from BCM • Starter control relay and starter relay status signal (IPDM E/R input) • Starter control relay control signal (IPDM E/R output) • P/N position signal input • Ignition power supply No.2 signal from BCM	• Harness or connectors (CAN communication line is open or shorted.) (Ignition power supply No.2 circuit is open or shorted.) • BCM • IPDM E/R

DTC CONFIRMATION PROCEDURE

1.PERFORM DTC CONFIRMATION PROCEDURE 2

1. Turn ignition switch ON.
2. Turn ignition switch OFF and wait for 1 second or more.
3. Check DTC in “Self Diagnostic Result” mode of “IPDM E/R” using CONSULT.

Is DTC detected?

YES >> Refer to SEC-114, "Diagnosis Procedure".
NO >> INSPECTION END

Diagnosis Procedure

INFOID:0000000012406160

1.CHECK SELF DIAGNOSTIC RESULT

Check DTC in “Self Diagnostic Result” mode of “IPDM E/R” using CONSULT.

What is the display history of DTC “B210D”?

“CRNT”>> GO TO 2.
“PAST” >> GO TO 4.

2.CHECK STARTER RELAY CONTROL SIGNAL CIRCUIT VOLTAGE

Check the voltage between IPDM E/R harness connector and ground.

(+)		(-)	Condition	Voltage (Approx.)
IPDM E/R				
Connector	Terminal			
E11	46	Ground	Other than at engine cranking	12 V

Is the inspection result normal?

YES >> Replace IPDM E/R. Refer to PCS-34, "Removal and Installation".
NO >> GO TO 3.

3.CHECK STARTER RELAY CONTROL SIGNAL CIRCUIT

1. Turn ignition switch OFF
2. Disconnect IPDM E/R connector and BCM connector.
3. Check continuity between IPDM E/R harness connector and ground.

IPDM E/R		Ground	Continuity
Connector	Terminal		
E11	46		Not existed

Is the inspection result normal?

YES >> Perform the diagnosis procedure for DTC B2608 of BCM. Refer to BCS-64, "DTC Index".
NO >> Repair or replace harness.

4.CHECK INTERMITTENT INCIDENT

Check intermittent incident. Refer to GI-41, "Intermittent Incident".

>> INSPECTION END

B210E STARTER RELAY

DTC Logic

INFOID:0000000012406161

DTC DETECTION LOGIC

NOTE:

- If DTC B210E is displayed with DTC U1000, first perform the trouble diagnosis for DTC U1000. Refer to PCS-28, "DTC Logic".
- If DTC B210E is displayed with DTC B2605, first perform the trouble diagnosis for DTC B2605. Refer to SEC-92, "DTC Logic".
- When IPDM E/R power supply voltage is low (Approx. 7 - 8 V for about 1 second), the DTC B210E may be detected.

DTC No.	Trouble diagnosis name	DTC detecting condition	Possible cause
B210E	STARTER RLY OFF CIRC	When comparing the following items, IPDM E/R detects that starter relay is stuck in the OFF position for 5 seconds or more. • Starter control relay signal (CAN) from BCM • Starter relay status signal (CAN) from BCM • Starter control relay and starter relay status signal (IPDM E/R input) • Starter control relay control signal (IPDM E/R output) • P/N position signal input • Ignition power supply No.2 signal from BCM	• Harness or connector (CAN communication line is open or shorted.) • Harness or connector (Starter relay circuit is open or shorted.) • IPDM E/R • BCM • Battery

DTC CONFIRMATION PROCEDURE

1.PERFORM DTC CONFIRMATION PROCEDURE

1. Press push-button ignition switch to start engine, and wait 1 seconds or more.
2. Check DTC in “Self Diagnostic Result” mode of “IPDM E/R” using CONSULT.

Is DTC detected?

YES >> Refer to SEC-116, "Diagnosis Procedure".
NO >> INSPECTION END

Diagnosis Procedure

INFOID:0000000012406162

1.CHECK SELF DIAGNOSTIC RESULT

Check DTC in “Self Diagnostic Result” mode of “IPDM E/R” using CONSULT.

What is the display history of DTC “B210E”?

“CRNT”>> GO TO 3.
“PAST” >> GO TO 2.

2.CHECK BATTERY VOLTAGE

Check the battery voltage.

Which is the measurement result?

More than 12.4 V>>GO TO 5.
Less than 12.4 V>>Perform battery inspection. Refer to PG-128, "How to Handle Battery".

3.CHECK STARTER RELAY CONTROL SIGNAL

Check voltage between IPDM E/R harness connector and ground.

(+)		(-)	Condition	Voltage (Approx.)
IPDM E/R				
Connector	Terminal			
E11	46	Ground	Other than at engine cranking	12 V

Is the inspection result normal?

YES >> GO TO 4.
NO >> Replace IPDM E/R. Refer to PCS-34, "Removal and Installation".

4. CHECK STARTER RELAY CONTROL SIGNAL CIRCUIT

1. Turn ignition switch OFF.
2. Disconnect BCM connector and IPDM E/R connector.
3. Check continuity between BCM harness connector and IPDM E/R harness connector.

BCM		IPDM E/R		Continuity
Connector	Terminal	Connector	Terminal	
M124	97	E11	46	Existed

Is the inspection result normal?

YES >> Replace BCM. Refer to BCS-99, "Removal and Installation".
NO >> Repair or replace harness.

5. CHECK INTERMITTENT INCIDENT

Check intermittent incident. Refer to GI-41, "Intermittent Incident".

>> INSPECTION END

B210F SHIFT POSITION/CLUTCH INTERLOCK SWITCH

DTC Logic

INFOID:0000000012406163

DTC DETECTION LOGIC

NOTE:
If DTC B210F is displayed with DTC U1000, first perform the trouble diagnosis for DTC U1000. Refer to PCS-28, "DTC Logic".

DTC No.	Trouble diagnosis name	DTC detecting condition	Possible cause
B210F	INTRLCK/PNP SW ON	There is a difference between P/N position signal from transmission range switch and P/N position signal from BCM (CAN).	• Harness or connectors (CAN communication line is open or shorted.) • Harness or connectors (transmission range switch circuit is open or shorted.) • Transmission range switch • IPDM E/R • BCM

DTC CONFIRMATION PROCEDURE

1.PERFORM DTC CONFIRMATION PROCEDURE

1. Shift selector lever to the P position.
2. Turn ignition switch ON and wait 1 second or more.
3. Shift selector lever to the N position and wait 1 second or more.
4. Shift selector lever to any position other than P and N, and wait 1 second or more.
5. Check DTC in “Self Diagnostic Result” mode of “IPDM E/R” using CONSULT.

Is DTC detected?

YES >> Go to SEC-120, "Diagnosis Procedure".
NO >> INSPECTION END

Diagnosis Procedure

INFOID:0000000012406164

1.CHECK DTC OF BCM

Check DTC in “Self Diagnostic Result” mode of “BCM” using CONSULT.

Is DTC detected?

YES >> Perform the trouble diagnosis related to the detected DTC. Refer to BCS-64, "DTC Index".
NO >> GO TO 2.

2.CHECK IPDM E/R SIGNAL CIRCUIT OPEN AND SHORT

1. Turn ignition switch OFF.
2. Disconnect IPDM E/R connector.
3. Disconnect transmission range switch connector.
4. Check continuity between IPDM E/R harness connector and transmission range switch harness connector.

IPDM E/R		Transmission range switch		Continuity
Connector	Terminal	Connector	Terminal	
F12	72	F17	2	Existed

5. Check continuity between IPDM E/R harness connector and ground.

(+)		(–)	Continuity
IPDM E/R			
Connector	Terminal		
F12	72	Ground	Not existed

Is the inspection result normal?

YES >> Replace IPDM E/R. Refer to PCS-34, "Removal and Installation".
NO >> Repair or replace harness.

B2110 SHIFT POSITION/CLUTCH INTERLOCK SWITCH

DTC Logic

INFOID:0000000012406165

DTC DETECTION LOGIC

NOTE:
If DTC B2110 is displayed with DTC U1000, first perform the trouble diagnosis for DTC U1000. Refer to PCS-28, "DTC Logic".

DTC No.	Trouble diagnosis name	DTC detecting condition	Possible cause
B2110	INTRLCK/PNP SW OFF	There is a difference between P/N position signal from transmission range switch and P/N position signal from BCM (CAN).	• Harness or connectors (CAN communication line is open or shorted.) • Harness or connectors (transmission range switch circuit is open or shorted.) • Transmission range switch • IPDM E/R • BCM

DTC CONFIRMATION PROCEDURE

1.PERFORM DTC CONFIRMATION PROCEDURE

1. Shift selector lever to the P position.
2. Turn ignition switch ON and wait 1 second or more.
3. Shift selector lever to the N position and wait 1 second or more.
4. Shift selector lever to any position other than P and N, and wait 1 second or more.
5. Check DTC in “Self Diagnostic Result” mode of “IPDM E/R” using CONSULT.

Is DTC detected?

YES >> Go to SEC-122, "Diagnosis Procedure".
NO >> INSPECTION END

Diagnosis Procedure

INFOID:0000000012406166

1.CHECK DTC OF BCM

Check DTC in “Self Diagnostic Result” mode of “BCM” using CONSULT.

Is DTC detected?

YES >> Perform the trouble diagnosis related to the detected DTC. Refer to BCS-64, "DTC Index".
NO >> GO TO 2.

2.CHECK IPDM E/R SIGNAL CIRCUIT OPEN AND SHORT

1. Turn ignition switch OFF.
2. Disconnect IPDM E/R connector.
3. Disconnect transmission range switch connector.
4. Check continuity between IPDM E/R harness connector and transmission range switch harness connector.

IPDM E/R		Transmission range switch		Continuity
Connector	Terminal	Connector	Terminal	
F12	72	F17	2	Existed

5. Check continuity between IPDM E/R harness connector and ground.

(+)		(–)	Continuity
IPDM E/R			
Connector	Terminal		
F12	72	Ground	Not existed

Is the inspection result normal?

YES >> Replace IPDM E/R. Refer to PCS-34, "Removal and Installation".
NO >> Repair or replace harness.

HEADLAMP FUNCTION

Component Function Check

INFOID:0000000012406167

1.CHECK FUNCTION

1. Perform “HEAD LAMP(HI)” in “ACTIVE TEST” mode of “THEFT ALM” of “BCM” using CONSULT.
2. Check headlamps operation.

Test item		Description	
HEAD LAMP (HI)	ON	Headlamps (Hi)	Light
	OFF		Do not light

Is the inspection result normal?

YES >> INSPECTION END
NO >> Refer to SEC-124, "Diagnosis Procedure".

Diagnosis Procedure

INFOID:0000000012406168

1.CHECK HEADLAMP FUNCTION

Refer to EXL-58, "Component Function Check" (Xenon type) or
EXL-159, "Component Function Check" (Halogen type)

Is the inspection result normal?

YES >> GO TO 2.
NO >> Repair or replace the malfunctioning parts.

2.CHECK INTERMITTENT INCIDENT

Refer to GI-41, "Intermittent Incident".

>> INSPECTION END

HORN FUNCTION

Component Function Check

INFOID:0000000012406169

1.CHECK FUNCTION

1. Perform “VEHICLE SECURITY HORN” in “ACTIVE TEST” mode of “THEFT ALM” of “BCM” using CONSULT.
2. Check the horn operation.

Test item		Description	
VEHICLE SECURITY HORN	ON	Horn	Sounds (for 0.5 sec)

Is the operation normal?

YES >> INSPECTION END
NO >> Go to SEC-125, "Diagnosis Procedure".

Diagnosis Procedure

INFOID:0000000012406170

1.CHECK HORN FUNCTION

Check that horn functions properly using horn switch.

Do horns sound?

YES >> GO TO 2.
NO >> Check horn circuit. Refer to HRN-4, "Wiring Diagram".

2.CHECK HORN CONTROL CIRCUIT

1. Disconnect horn relay.
2. Disconnect IPDM E/R connector.
3. Check continuity between IPDM E/R harness connector and horn relay harness connector.

IPDM E/R		Horn relay		Continuity
Connector	Terminal	Connector	Terminal	
E11	44	E5	1	Existed

Is the inspection result normal?

YES >> GO TO 3.
NO >> Repair or replace harness.

3.CHECK INTERMITTENT INCIDENT

Refer to GI-41, "Intermittent Incident".

>> INSPECTION END

SECURITY INDICATOR LAMP

Component Function Check

INFOID:0000000012406171

1.CHECK FUNCTION

1. Perform “THEFT IND” in “ACTIVE TEST” mode of “IMMU” of “BCM” using CONSULT.
2. Check security indicator lamp operation.

Test item		Description	
THEFT IND	ON	Security indicator lamp	Illuminates
	OFF		Does not illuminate

Is the inspection result normal?

YES >> INSPECTION END
NO >> Go to SEC-126, "Diagnosis Procedure".

Diagnosis Procedure

INFOID:0000000012406172

1.CHECK FUSE

1. Turn ignition switch OFF.
2. Check that the following fuse in the fuse block (J/B) is not blown (open).

Signal name	Fuse No.
Battery power supply	11 (10 A)

Is the fuse blown (open)?

YES >> Replace the blown (open) fuse after repairing the affected circuit if a fuse is blown (open).
NO >> GO TO 2.

2.CHECK SECURITY INDICATOR LAMP POWER SUPPLY CIRCUIT

1. Disconnect combination meter connector.
2. Check voltage between combination meter harness connector and ground.

(+)		(–)	Voltage (V) (Approx.)
Combination meter			
Connector	Terminal		
M34	1	Ground	Battery voltage

Is the inspection result normal?

YES >> GO TO 3.
NO >> Repair or replace harness.

3.CHECK SECURITY INDICATOR LAMP SIGNAL

1. Connect combination meter connector.
2. Disconnect BCM connector.
3. Check voltage between BCM harness connector and ground.

(+)		(–)	Voltage (V) (Approx.)
BCM			
Connector	Terminal		
M121	23	Ground	Battery voltage

Is the inspection result normal?

YES >> GO TO 4.
NO >> GO TO 5.

4.REPLACE BCM

1. Replace BCM. Refer to BCS-99, "Removal and Installation".
2. Perform initialization of BCM and registration of all Intelligent Keys using CONSULT.

>> INSPECTION END

5. CHECK SECURITY INDICATOR LAMP CIRCUIT

1. Disconnect combination meter connector.
2. Check continuity between combination meter harness connector and BCM harness connector.

Combination meter		BCM		Continuity
Connector	Terminal	Connector	Terminal	
M34	28	M121	23	Existed

3. Check continuity between combination meter harness connector and ground.

Combination meter		Ground	Continuity
Connector	Terminal		
M34	28		Not existed

Is the inspection result normal?

YES >> Replace combination meter. Refer to MWI-96, "Removal and Installation".
NO >> Repair or replace harness.

SYMPTOM DIAGNOSIS

ENGINE DOES NOT START WHEN INTELLIGENT KEY IS INSIDE OF VEHICLE

Description

INFOID:0000000012406173

Engine does not start when push-button ignition switch is pressed while carrying Intelligent Key.

NOTE:

- Check that vehicle is under the condition shown in “Conditions of vehicle” before starting diagnosis, and check each symptom.
- The engine start function, door lock function, power distribution system, and NATS-IVIS/NVIS in the Intelligent Key system are closely related to each other regarding control. The vehicle security function can operate only when the door lock and power distribution systems are operating normally.

Conditions of Vehicle (Operating Conditions)

- “ENGINE START BY I-KEY”: ON
  Check the setting of “ENGINE START BY I-KEY” in “Work Support” mode of “INTELLIGENT KEY” of “BCM” using CONSULT.
- One or more of Intelligent Keys with registered Intelligent Key ID are in the vehicle.

Diagnosis Procedure

INFOID:0000000012406174

1.PERFORM WORK SUPPORT

Perform “INSIDE ANT DIAGNOSIS” in “Work Support” mode of “INTELLIGENT KEY” of BCM using CONSULT.
Refer to DLK-95, "INTELLIGENT KEY : CONSULT Function (BCM - INTELLIGENT KEY)".

>> GO TO 2.

2.PERFORM SELF-DIAGNOSIS RESULT

Perform Self-Diagnosis Result in “BCM”, and check whether or not DTC of inside key antenna is detected.

Is DTC detected?

YES >> Refer to BCS-64, "DTC Index".
NO >> GO TO 3.

3.CHECK PUSH-BUTTON IGNITION SWITCH

Check push-button ignition switch.
Refer to PCS-72, "Component Function Check".

Is the operation normal?

YES >> GO TO 4.
NO >> Repair or replace malfunctioning parts.

4.CONFIRM THE OPERATION

Confirm the operation again.

Is the inspection normal?

YES >> Check intermittent incident. Refer to GI-41, "Intermittent Incident".
NO >> GO TO 1.

SECURITY INDICATOR LAMP DOES NOT TURN ON OR BLINK

Description

INFOID:0000000012406175

Security indicator lamp does not blink when ignition switch is in a position other than ON.

NOTE:

- Before performing the diagnosis, check “Work Flow”. Refer to SEC-57, "Work Flow".
- Check that vehicle is under the condition shown in “CONDITIONS OF VEHICLE (OPERATING CONDITIONS)” before starting diagnosis, and check each symptom.

CONDITIONS OF VEHICLE (OPERATING CONDITIONS)

Power supply position is not the ON position.

Diagnosis Procedure

INFOID:0000000012406176

1.CHECK SECURITY INDICATOR LAMP

Check security indicator lamp.

Refer to SEC-126, "Component Function Check".

Is the inspection result normal?

YES >> GO TO 2.

NO >> Repair or replace the malfunctioning parts.

2.CONFIRM THE OPERATION

Confirm the operation again.

Is the result normal?

YES >> Check intermittent incident. Refer to GI-41, "Intermittent Incident".

NO >> GO TO 1.

VEHICLE SECURITY SYSTEM CANNOT BE SET
INTELLIGENT KEY

INTELLIGENT KEY : Description

INFOID:0000000012406177

Armed phase is not activated when all doors are locked using Intelligent Key.
NOTE:
Check that vehicle is under the condition shown in “CONDITIONS OF VEHICLE (OPERATING CONDITIONS)” before starting diagnosis, and check each symptom.

CONDITION OF VEHICLE (OPERATING CONDITIONS)
“SECURITY ALARM SET”: ON
Check the setting of “SECURITY ALARM SET” in “Work Support” mode of “THEFT ALM” of “BCM” using CONSULT.

INTELLIGENT KEY : Diagnosis Procedure

INFOID:0000000012406178

1.CHECK INTELLIGENT KEY SYSTEM (REMOTE KEYLESS ENTRY FUNCTION)

Lock/unlock door with Intelligent Key.
Refer to DLK-44, "REMOTE KEYLESS ENTRY FUNCTION : System Description".

Is the inspection result normal?

YES >> GO TO 2.
NO >> Check Intelligent Key system (remote keyless entry function). Refer to DLK-374, "Diagnosis Procedure".

2.CONFIRM THE OPERATION

Confirm the operation again.

Is the result normal?

YES >> Check intermittent incident. Refer to GI-41, "Intermittent Incident".
NO >> GO TO 1.

DOOR REQUEST SWITCH

DOOR REQUEST SWITCH : Description

INFOID:0000000012406179

Armed phase is not activated when all doors are locked using door request switch.
NOTE:
Check that vehicle is under the condition shown in “CONDITIONS OF VEHICLE (OPERATING CONDITIONS)” before starting diagnosis, and check each symptom.

CONDITION OF VEHICLE (OPERATING CONDITIONS)
“SECURITY ALARM SET”: ON
Check the setting of “SECURITY ALARM SET” in “Work Support” mode of “THEFT ALM” of “BCM” using CONSULT.

DOOR REQUEST SWITCH : Diagnosis Procedure

INFOID:0000000012406180

1.CHECK INTELLIGENT KEY SYSTEM (DOOR LOCK FUNCTION)

Lock/unlock door with door request switch.
Refer to DLK-40, "DOOR LOCK FUNCTION : System Description".

Is the inspection result normal?

YES >> GO TO 2.
NO >> Check Intelligent Key system (door lock function). Refer to DLK-371, "ALL DOOR REQUEST SWITCHES : Diagnosis Procedure".

2.CONFIRM THE OPERATION

Confirm the operation again.

Is the result normal?

YES >> Check intermittent incident. Refer to GI-41, "Intermittent Incident".

NO >> GO TO 1.

DOOR KEY CYLINDER

DOOR KEY CYLINDER : Description

INFOID:0000000012406181

ARMED phase is not activated when all doors are locked using mechanical key.

NOTE:

Check that vehicle is under the condition shown in “Conditions of vehicle” before starting diagnosis, and check each symptom.

CONDITION OF VEHICLE (OPERATING CONDITION)

- SECURITY ALARM SET: ON
  Check the setting of “SECURITY ALARM SET” in “Work Support” mode of “THEFT ALM” of “BCM” using CONSULT.

DOOR KEY CYLINDER : Diagnosis Procedure

INFOID:0000000012406182

1.CHECK POWER DOOR LOCK SYSTEM

Lock or unlock doors using mechanical key.
Refer to DLK-33, "System Description".

Is the inspection result normal?

YES >> GO TO 2.
NO >> Check power door lock system. Refer to DLK-370, "Diagnosis Procedure".

2.CONFIRM THE OPERATION

Confirm the operation again.

Is the result normal?

YES >> Check intermittent incident. Refer to GI-41, "Intermittent Incident".
NO >> GO TO 1.

DOOR LOCK AND UNLOCK SWITCH

DOOR LOCK AND UNLOCK SWITCH : Description

INFOID:0000000012406183

Armed phase is not activated when all doors are locked by door lock and unlock switch.

NOTE:

Check that vehicle is under the condition shown in “CONDITIONS OF VEHICLE (OPERATING CONDITIONS)” before starting diagnosis, and check each symptom.

CONDITION OF VEHICLE (OPERATING CONDITIONS)

“SECURITY ALARM SET”: ON
Check the setting of “SECURITY ALARM SET” in “Work Support” mode of “THEFT ALM” of “BCM” using CONSULT.

DOOR LOCK AND UNLOCK SWITCH : Diagnosis Procedure

INFOID:0000000012406184

1.CHECK DOOR LOCK FUNCTION

Lock/unlock door using mechanical key inserted into door key cylinder.
Refer to DLK-33, "System Description".

Is the inspection result normal?

YES >> GO TO 2.
NO >> Check Intelligent Key system (remote keyless entry function). Refer to DLK-367, "ALL DOOR : Diagnosis Procedure".

2.CONFIRM THE OPERATION

Confirm the operation again.

Is the result normal?

YES >> Check intermittent incident. Refer to GI-41, "Intermittent Incident".
NO >> GO TO 1.

VEHICLE SECURITY ALARM DOES NOT ACTIVATE

Description

INFOID:0000000012406185

Alarm does not operate when alarm operating condition is satisfied.

NOTE:

Check that vehicle is under the condition shown in “CONDITIONS OF VEHICLE (OPERATING CONDITIONS)” before starting diagnosis, and check each symptom.

CONDITION OF VEHICLE (OPERATING CONDITIONS)

“SECURITY ALARM SET”: ON

Check the setting of “SECURITY ALARM SET” in “Work Support” mode of “THEFT ALM” of “BCM” using CONSULT.

Diagnosis Procedure

INFOID:0000000012406186

1.CHECK DOOR SWITCH

Check door switch.

Refer to DLK-247, "Component Function Check".

Is the inspection result normal?

YES >> GO TO 2.

NO >> Replace the malfunctioning door switch

2.CHECK HEADLAMPS FUNCTION

Check head lamps function.

Refer to SEC-124, "Component Function Check".

Is the inspection result normal?

YES >> GO TO 3.

NO >> Repair or replace the malfunctioning parts.

3.CHECK HORN FUNCTION

Check horn function.

Refer to SEC-125, "Component Function Check".

Is the inspection result normal?

YES >> GO TO 4.

NO >> Repair or replace the malfunctioning parts.

4.CONFIRM THE OPERATION

Confirm the operation again.

Is the result normal?

YES >> Check intermittent incident. Refer to GI-41, "Intermittent Incident".

NO >> GO TO 1.

REMOVAL AND INSTALLATION

NATS ANTENNA AMP.

Removal and Installation

INFOID:0000000012406187

REMOVAL

1. Remove the push-button ignition switch. Refer to SEC-134, "Removal and Installation".
2. Press the NATS antenna amp. fixing pawls in the direction of the arrow (1), as shown in the figure, to disengage them.

   : Pawl

3. Push NATS antenna amp. (1) in the direction of the arrow (2), as shown in the figure, to remove it from instrument finisher A (2).

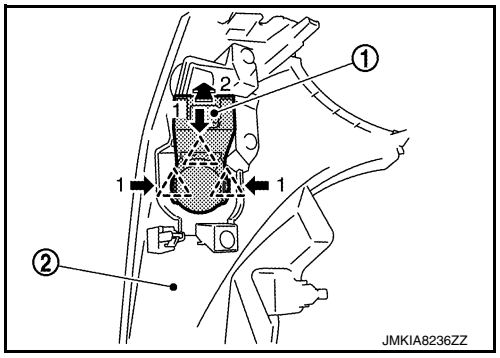

INSTALLATION

Install in the reverse order of removal.

PUSH-BUTTON IGNITION SWITCH

Removal and Installation

INFOID:0000000012406188

REMOVAL

1. Remove instrument finisher A. Refer to IP-14, "Removal and Installation".
2. Disconnect NATS antenna amp. connector and push-button ignition switch connector.
3. Disengage the push-button ignition switch fixing pawls by pushing them in the direction of the arrow (1) as shown in the figure.

   : Pawl

4. Push push-button ignition switch (1) in the direction of the arrow (2), as shown in the figure, and remove push-button ignition switch from NATS antenna amp (2).

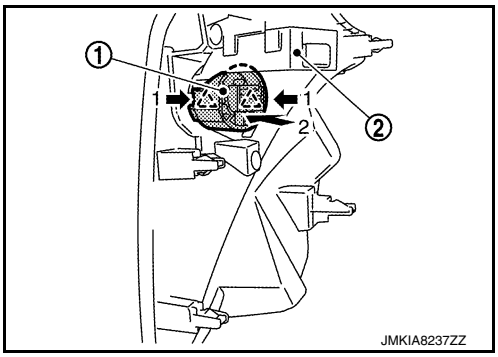

INSTALLATION

Install in the reverse order of removal.