# SECTION DMS
# DRIVE MODE SYSTEM

## CONTENTS

### SPORT MODE

# PRECAUTION

## PRECAUTIONS

### Precaution for Supplemental Restraint System (SRS) "AIR BAG" and "SEAT BELT PRE-TENSIONER"

INFOID:0000000010430570

The Supplemental Restraint System such as “AIR BAG” and “SEAT BELT PRE-TENSIONER”, used along with a front seat belt, helps to reduce the risk or severity of injury to the driver and front passenger for certain types of collision. Information necessary to service the system safely is included in the SR and SB section of this Service Manual.

**WARNING:**

- **To avoid rendering the SRS inoperative, which could increase the risk of personal injury or death in the event of a collision which would result in air bag inflation, all maintenance must be performed by an authorized NISSAN/INFINITI dealer.**
- **Improper maintenance, including incorrect removal and installation of the SRS, can lead to personal injury caused by unintentional activation of the system. For removal of Spiral Cable and Air Bag Module, see the SR section.**
- **Do not use electrical test equipment on any circuit related to the SRS unless instructed to in this Service Manual. SRS wiring harnesses can be identified by yellow and/or orange harnesses or harness connectors.**

### PRECAUTIONS WHEN USING POWER TOOLS (AIR OR ELECTRIC) AND HAMMERS

**WARNING:**

- **When working near the Airbag Diagnosis Sensor Unit or other Airbag System sensors with the Ignition ON or engine running, DO NOT use air or electric power tools or strike near the sensor(s) with a hammer. Heavy vibration could activate the sensor(s) and deploy the air bag(s), possibly causing serious injury.**
- **When using air or electric power tools or hammers, always switch the Ignition OFF, disconnect the battery and wait at least three minutes before performing any service.**

# SYSTEM DESCRIPTION

## COMPONENT PARTS

### Component Parts Location

INFOID:0000000010103801

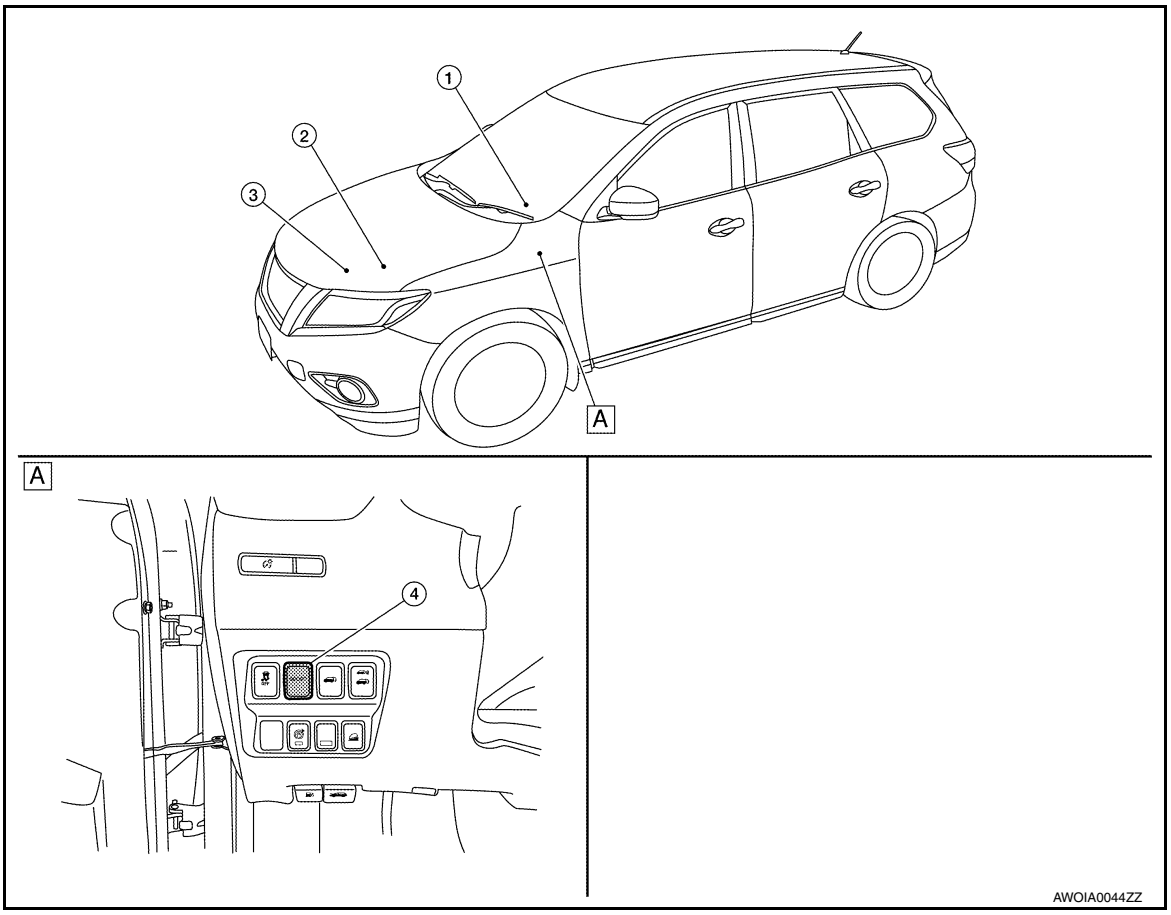


A Instrument lower panel LH

| No. | Component | Function |
|---|---|---|
| ① | Combination meter | • The combination meter transmittes the following signal via CAN communications to the TCM.<br>- SPORT mode switch signal<br>• The combination meter receives the following signal via CAN communications from the ECM.<br>- SPORT mode indicator signal<br>Refer to MWI-6, "METER SYSTEM : Component Parts Location" for detailed installation location. |
| ② | TCM | • The TCM receives the following signal via CAN communications from the combination meter.<br>- SPORT mode switch signal<br>• The TCM transmittes the following signal via CAN communications to the ECM.<br>- SPORT mode signal<br>Refer to TM-12, "CVT CONTROL SYSTEM : Component Parts Location" for detailed installation location. |

| No. | Component | Function |
|---|---|---|
| ③ | ECM | • The ECM receives the following signal via CAN communications from the TCM.<br>- SPORT mode signal<br>• The ECM transmittes the following signal via CAN communications to the combination meter.<br>- SPORT mode indicator signal<br>Refer to EC-14, "Component Parts Location" for detailed installation location. |
| ④ | SPORT mode switch | Refer to DMS-4, "SPORT Mode Switch". |

## SPORT Mode Switch

INFOID:0000000010103802

- The SPORT mode switch is installed to the instrument lower finisher.
- When the SPORT mode indicator lamp on the combination meter is OFF and the SPORT mode switch is pressed, the SPORT mode is active and the SPORT mode indicator lamp is ON.
- When the SPORT mode indicator lamp on the combination meter is ON and the SPORT mode switch is pressed, the SPORT mode is cancelled and the SPORT mode indicator lamp is OFF.

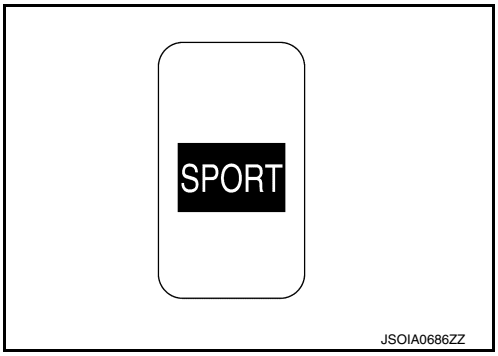


## SPORT Mode Indicator Lamp

INFOID:0000000010103803

### DESIGN/PURPOSE

The SPORT mode indicator lamp inform the driver that the vehicle is in SPORT mode.

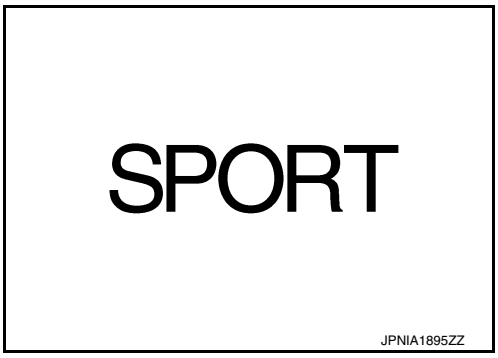


### BULB CHECK

Not applicable

### SYSTEM DIAGRAM

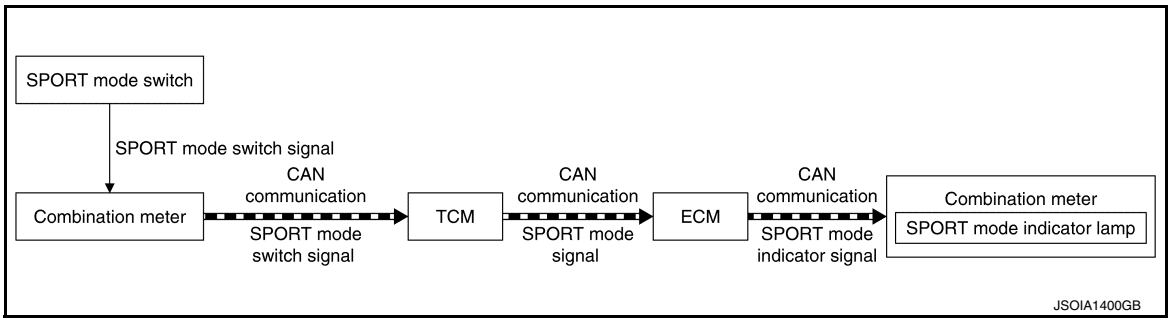


### SIGNAL PATH

- TCM receives SPORT mode switch signal (ON/OFF) from combination meter via CAN communication. Based on the signal, TCM transmits SPORT mode signal to ECM via CAN communication.
- ECM transmits SPORT mode indicator signal to combination meter via CAN communication. Based on the signal, combination meter illuminates SPORT mode indicator lamp.

### LIGHTING CONDITION

When all of the following conditions are satisfied.

- Ignition switch: ON
- The SPORT mode switch is pressed when the SPORT mode indicator lamp is OFF

SHUTOFF CONDITION

When any of the condition listed below is satisfied.

- Ignition switch: Other than ON
- The SPORT mode switch is pressed when the SPORT mode indicator lamp is ON.

# SYSTEM

## SPORT MODE CONTROL

### SPORT MODE CONTROL : System Description

INFOID:0000000010103804

#### SYSTEM DIAGRAM

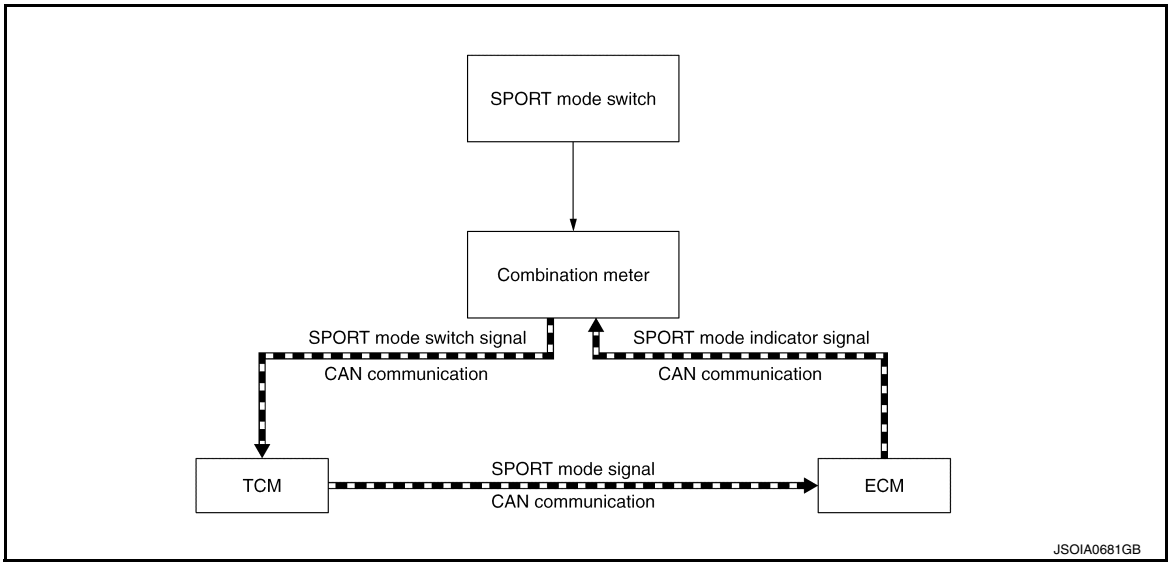


#### SYSTEM DISCRIPTION

- TCM receives SPORT mode switch signal (ON/OFF) from combination meter via CAN communication. TCM transmit SPORT mode signal to ECM via CAN communication according to the signal.
- ECM transmits SPORT mode indicator signal to combination meter via CAN communication. Combination meter illuminates SPORT mode indicator lamp according to the signal.

Each ECU Control

- For TCM control, refer to TM-41, "SPORT MODE CONTROL : System Description".
- For ECM control, refer to EC-54, "SPORT MODE CONTROL : System Description".

# ECU DIAGNOSIS INFORMATION

## SPORT MODE

### List of ECU Reference

INFOID:0000000010103805

| ECU | Reference |
|---|---|
| TCM | TM-52, "Reference Value" |
| | TM-58, "Fail-safe" |
| | TM-62, "DTC Inspection Priority Chart" |
| | TM-63, "DTC Index" |
| ECM | EC-77, "Reference Value" |
| | EC-89, "Fail Safe" |
| | EC-92, "DTC Inspection Priority Chart" |
| | EC-93, "DTC Index" |
| Combination meter | MWI-24, "Reference Value" |
| | MWI-29, "Fail-safe" |
| | MWI-30, "DTC Index" |

# WIRING DIAGRAM

## SPORT MODE SYSTEM

### Wiring Diagram

INFOID:0000000010103806

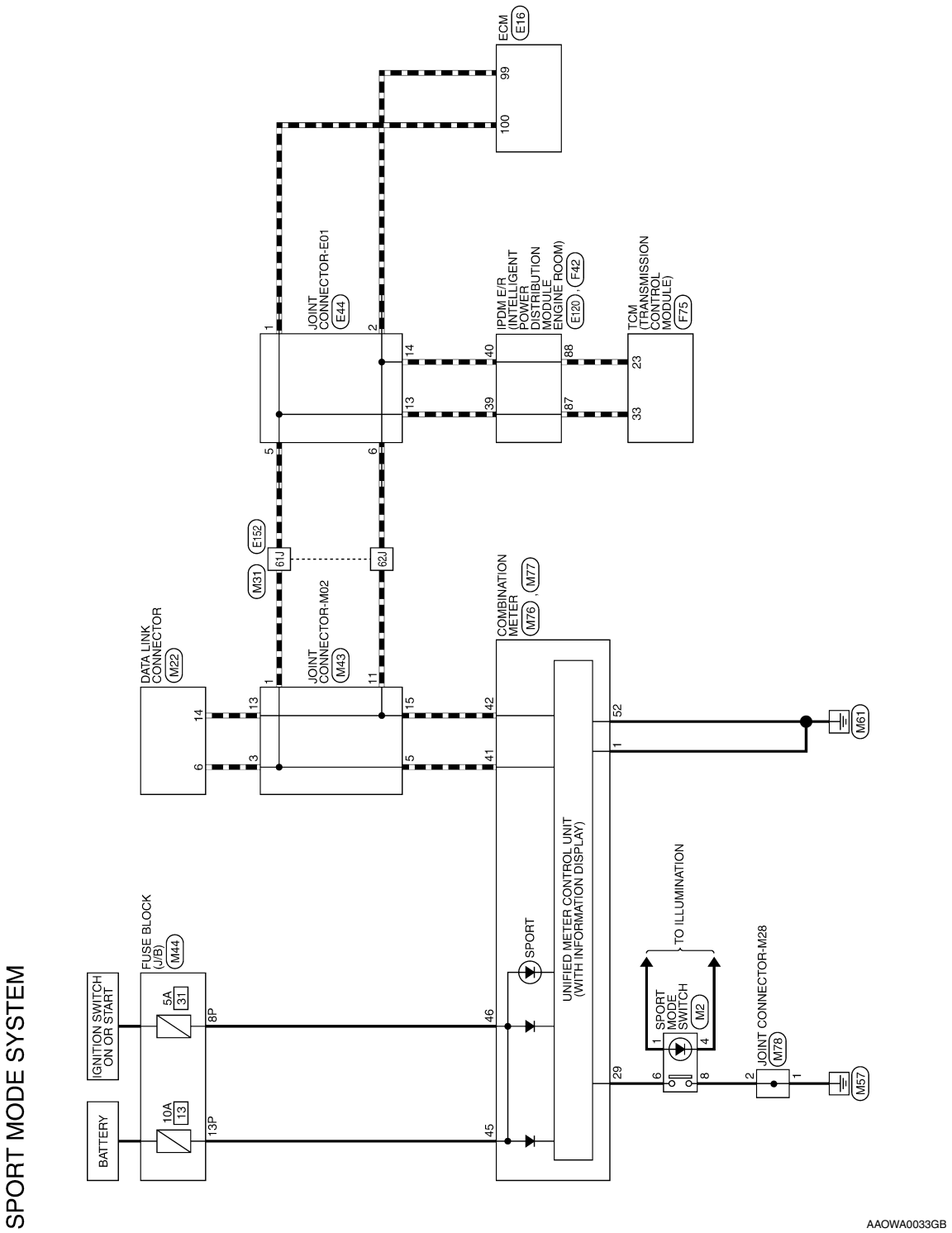

## SPORT MODE SYSTEM CONNECTORS

| Connector No. | M2 |
|---|---|
| Connector Name | SPORT MODE SWITCH |
| Connector Color | BLUE |


| Terminal No. | Color of Wire | Signal Name |
|---|---|---|
| 1 | G | – |
| 4 | GR | – |
| 6 | R | – |
| 8 | GR | – |

| Connector No. | M22 |
|---|---|
| Connector Name | DATA LINK CONNECTOR |
| Connector Color | WHITE |

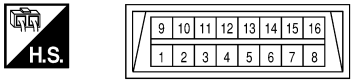


| Terminal No. | Color of Wire | Signal Name |
|---|---|---|
| 6 | L | – |
| 14 | P | – |

| Connector No. | M31 |
|---|---|
| Connector Name | WIRE TO WIRE |
| Connector Color | WHITE |

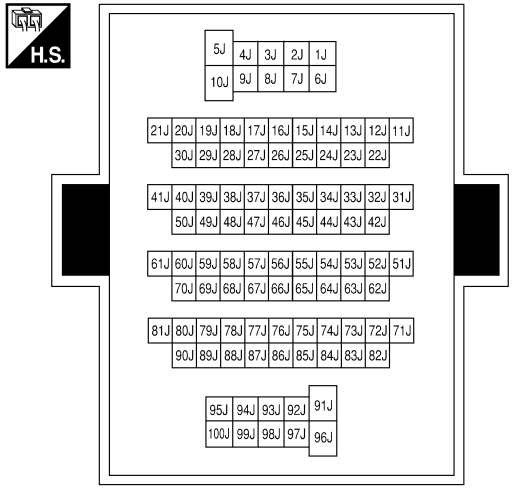


| Terminal No. | Color of Wire | Signal Name |
|---|---|---|
| 61J | L | – |
| 62J | P | – |

| Connector No. | M43 |
|---|---|
| Connector Name | JOINT CONNECTOR-M02 |
| Connector Color | BLUE |

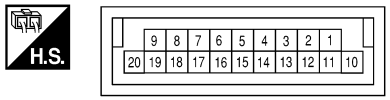


| Terminal No. | Color of Wire | Signal Name |
|---|---|---|
| 1 | L | – |
| 3 | L | – |
| 5 | L | – |
| 11 | P | – |
| 13 | P | – |
| 15 | P | – |

| Connector No. | M44 |
|---|---|
| Connector Name | FUSE BLOCK (J/B) |
| Connector Color | WHITE |

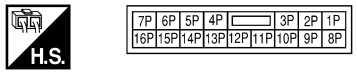


| Terminal No. | Color of Wire | Signal Name |
|---|---|---|
| 8P | LA/BR | – |
| 13P | LA/G | – |

AAOIA0138GB

| Connector No. | M76 |
|---|---|
| Connector Name | COMBINATION METER |
| Connector Color | WHITE |

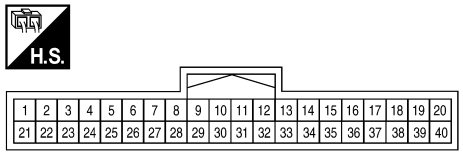


| Terminal No. | Color of Wire | Signal Name |
|---|---|---|
| 1 | B | GND1 |
| 29 | R | SPORT MODE SW |

| Connector No. | M77 |
|---|---|
| Connector Name | COMBINATION METER |
| Connector Color | WHITE |

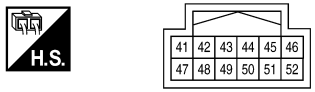


| Terminal No. | Color of Wire | Signal Name |
|---|---|---|
| 41 | L | CAN-H |
| 42 | P | CAN-L |
| 45 | LA/G | ALVUSBAT |
| 46 | LA/BR | IGN |
| 52 | B | GND2 |

| Connector No. | M78 |
|---|---|
| Connector Name | JOINT CONNECTOR-M28 |
| Connector Color | WHITE |

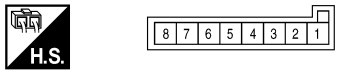


| Terminal No. | Color of Wire | Signal Name |
|---|---|---|
| 1 | GR | – |
| 2 | GR | – |

| Connector No. | E16 |
|---|---|
| Connector Name | ECM |
| Connector Color | BLACK |

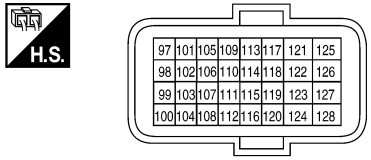


| Terminal No. | Color of Wire | Signal Name |
|---|---|---|
| 99 | P | CAN-L |
| 100 | L | CAN-H |

| Connector No. | E44 |
|---|---|
| Connector Name | JOINT CONNECTOR-E01 |
| Connector Color | WHITE |

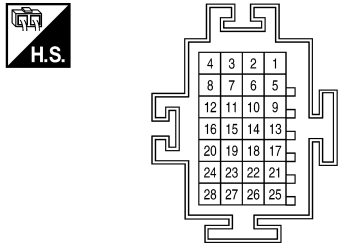


| Terminal No. | Color of Wire | Signal Name |
|---|---|---|
| 1 | L | – |
| 2 | P | – |
| 5 | L | – |
| 6 | P | – |
| 13 | L | – |
| 14 | P | – |

AAOIA0139GB

| Connector No. | E120 |
|---|---|
| Connector Name | IPDM E/R (INTELLIGENT POWER DISTRIBUTION MODULE ENGINE ROOM) |
| Connector Color | GRAY |

H.S.

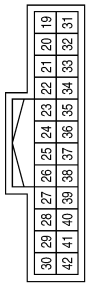


| Terminal No. | Color of Wire | Signal Name |
|---|---|---|
| 39 | L | CAN-H |
| 40 | P | CAN-L |

| Connector No. | E152 |
|---|---|
| Connector Name | WIRE TO WIRE |
| Connector Color | WHITE |

H.S.

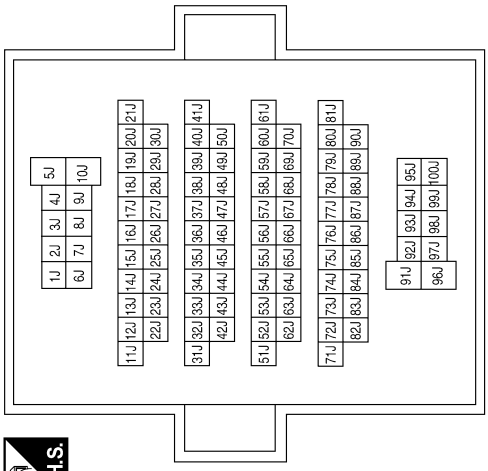


| Terminal No. | Color of Wire | Signal Name |
|---|---|---|
| 61J | L | – |
| 62J | P | – |

| Connector No. | F42 |
|---|---|
| Connector Name | IPDM E/R (INTELLIGENT POWER DISTRIBUTION MODULE ENGINE ROOM) |
| Connector Color | BLACK |

H.S.

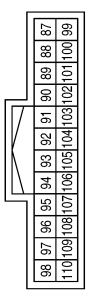


| Terminal No. | Color of Wire | Signal Name |
|---|---|---|
| 87 | L | CAN-H |
| 88 | P | CAN-L |

| Connector No. | F75 |
|---|---|
| Connector Name | TCM (TRANSMISSION CONTROL MODULE) |
| Connector Color | BLACK |

H.S.

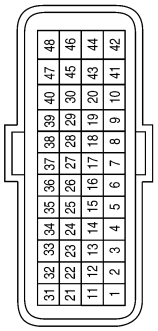


| Terminal No. | Color of Wire | Signal Name |
|---|---|---|
| 23 | P | CAN-L |
| 33 | L | CAN-H |

AAOIA0140GB

# BASIC INSPECTION

## DIAGNOSIS AND REPAIR WORK FLOW

### Work Flow

INFOID:0000000010103807

DETAILED FLOW

1.OBTAIN INFORMATION ABOUT SYMPTOM

Interview the customer to obtain as much information as possible about the conditions and environment under which the malfunction occurs.

>> GO TO 2.

2.CHECK SYMPTOM

- Check the symptom based on the information obtained from the customer.
- Check if any other malfunctions are present.

>> GO TO 3.

3.DTC/SYSTEM DIGANOSIS

Perform a DTC/system diagnosis and repair or replace any malfunctioning part.

>> GO TO 4.

4.FINAL CHECK

Check that the SPORT mode functions normally.

Does it operation normally?

YES >> End of trouble diagnosis
NO >> GO TO 2.

# DTC/CIRCUIT DIAGNOSIS

## SPORT MODE SWITCH

### Component Function Check

INFOID:0000000010103808

#### 1. CHECK SPORT MODE SWITCH OPERATION

1. Turn ignition switch ON.
2. Check SPORT mode indicator lamp turns ON/OFF on combination meter when turn SPORT mode switch ON/OFF.

Is the inspection result normal?

YES >> INSPECTION END
NO >> Proceed to DMS-13, "Diagnosis Procedure".

### Diagnosis Procedure

INFOID:0000000010103809

#### 1. CHECK SPORT MODE SWITCH CIRCUIT

1. Turn ignition switch OFF.
2. Disconnect SPORT mode switch harness connector.
3. Turn ignition switch ON.
4. Check voltage between SPORT mode switch harness connector terminals.

| SPORT mode switch | | | Voltage (Approx.) |
|---|---|---|---|
| Connector | + | – | |
| | Terminal | | |
| M2 | 6 | 8 | 5 V |

Is the inspection result normal?

YES >> GO TO 6.
NO >> GO TO 2.

#### 2. CHECK GROUND CIRCUIT

1. Turn ignition switch OFF.
2. Check the continuity between SPORT mode switch harness connector and ground.

| SPORT mode switch | | — | Continuity |
|---|---|---|---|
| Connector | Terminal | | |
| M2 | 8 | Ground | Existed |

Is the inspection result normal?

YES >> GO TO 3.
NO >> Repair or replace damaged parts.

#### 3. CHECK CIRCUIT BETWEEN COMBINATION METER AND SPORT MODE SWITCH (1)

1. Disconnect combination meter harness connector M76.
2. Check continuity between combination meter harness connector terminal and SPORT mode switch harness connector terminal.

| Combination meter | | SPORT mode switch | | Continuity |
|---|---|---|---|---|
| Connector | Terminal | Connector | Terminal | |
| M76 | 29 | M2 | 6 | Existed |

Is the inspection result normal?

YES >> GO TO 4.
NO >> Repair or replace damaged parts.

#### 4. CHECK CIRCUIT BETWEEN COMBINATION METER AND SPORT MODE SWITCH (2)

Check continuity between combination meter harness connector terminal and SPORT mode switch harness connector terminal.

| Combination meter | | — | Continuity |
|---|---|---|---|
| Connector | Terminal | | |
| M76 | 29 | Ground | Not existed |

Is the inspection result normal?

YES >> GO TO 5.
NO >> Repair or replace damaged parts.

## 5. CHECK COMBINATION METER INPUT/OUTPUT SIGNAL

1. Connect all of disconnected connectors.
2. Check input/output signal of combination meter. Refer to MWI-24, "Reference Value".

Is the inspection result normal?

YES >> Check intermittent incident. Refer to GI-41, "Intermittent Incident".
NO >> Replace combination meter. Refer to MWI-82, "Removal and Installation".

## 6. CHECK SPORT MODE SWITCH

Check SPORT mode switch. Refer to DMS-14, "Component Inspection".

Is the inspection result normal?

YES >> Check intermittent incident. Refer to GI-41, "Intermittent Incident".
NO >> Replace SPORT mode switch. Refer to DMS-16, "Removal and Installation".

# Component Inspection

INFOID:0000000010103810

## 1. CHECK SPORT MODE SWITCH

Check continuity between SPORT mode switch connector terminals.

| SPORT mode switch | Condition | Continuity |
|---|---|---|
| Terminal | | |
| 6 – 8 | SPORT mode switch is depressed. | Existed |
| | SPORT mode switch is released. | Not existed |

Is the inspection result normal?

YES >> INSPECTION END
NO >> Replace SPORT mode switch. Refer to DMS-16, "Removal and Installation".

# SYMPTOM DIAGNOSIS

## THE SPORT MODE INDICATOR LAMP DOES NOT TURN ON

### Description

INFOID:0000000010103811

The SPORT mode indicator lamp does not turn ON when the SPORT mode switch is operated.

### Diagnosis Procedure

INFOID:0000000010103812

**1.** CHECK SPORT MODE INDICATOR LAMP FUNCTION

Perform combination meter self-diagnosis mode and check test order 10. Refer to MWI-19, "Description".

Is the check result normal?

YES >> GO TO 2.
NO >> Replace combination meter. Refer to MWI-82, "Removal and Installation".

**2.** CHECK DTC (TCM)

**With CONSULT**

1. Start the engine.
2. Check “Self Diagnostic Results” in “TRANSMISSION”.

Is any DTC detected?

YES >> Check DTC detected item. Refer to TM-63, "DTC Index".
NO >> GO TO 3.

**3.** CHECK DTC (ECM)

**With CONSULT**

Check “Self Diagnostic Results” in “ENGINE”.

Is any DTC detected?

YES >> Check DTC detected item. Refer to EC-93, "DTC Index".
NO >> GO TO 4.

**4.** CHECK DTC (COMBINATION METER)

**With CONSULT**

Check “Self Diagnostic Results” in “METER/M&A”.

Is any DTC detected?

YES >> Check DTC detected item. Refer to MWI-30, "DTC Index".
NO >> GO TO 5.

**5.** CHECK COMBINATION METER INPUT/OUTPUT SIGNAL

**With CONSULT**

1. Select “Data Monitor” in “METER/M&A”.
2. Select “SPORT MODE IND”.
3. Check that “SPORT MODE IND” turns ON/OFF when SPORT mode switch is operated. Refer to MWI-24, "Reference Value".

Is any DTC detected?

YES >> Replace combination meter. Refer to MWI-82, "Removal and Installation".
NO >> GO TO 6.

**6.** CHECK SPORT MODE SWITCH CIRCUIT

Check SPORT mode switch circuit. Refer to DMS-13, "Diagnosis Procedure".

Is any DTC detected?

YES >> INSPECTION END
NO >> Repair or replace malfunctioning parts.

# REMOVAL AND INSTALLATION

## SPORT MODE SWITCH

### Removal and Installation

INFOID:0000000010103813

REMOVAL

1. Remove instrument lower panel LH. Refer to IP-14, "Exploded View".
2. Remove SPORT mode switch.

INSTALLATION

Installation is in the reverse order of removal.