SECTION PWC

POWER WINDOW CONTROL SYSTEM

CONTENTS

PRECAUTION 4

PRECAUTIONS 4
- Precaution for Supplemental Restraint System (SRS) "AIR BAG" and "SEAT BELT PRE-TENSIONER" 4
- Precaution for Work 4

PREPARATION 5

PREPARATION 5
- Special Service Tool 5
- Commercial Service Tools 5

SYSTEM DESCRIPTION 6

COMPONENT PARTS 6
- Component Parts Location 6
- Power Window Main Switch 7
- Power Window Switch 7
- Power Window Motor 7

SYSTEM 8
- System Description 8
- Fail Safe 9

DIAGNOSIS SYSTEM (BCM) (WITH INTELLIGENT KEY SYSTEM) 10

COMMON ITEM 10
- COMMON ITEM : CONSULT Function (BCM - COMMON ITEM) 10

RETAINED PWR 10
- RETAINED PWR : CONSULT Function (BCM - RETAINED PWR) 11

DIAGNOSIS SYSTEM (BCM) (WITHOUT INTELLIGENT KEY SYSTEM) 12

COMMON ITEM 12
- COMMON ITEM : CONSULT Function (BCM - COMMON ITEM) 12

RETAINED PWR 12
- RETAINED PWR : CONSULT Function (BCM - RETAINED PWR) 12

ECU DIAGNOSIS INFORMATION 14

BCM (BODY CONTROL MODULE) 14
- List of ECU Reference 14

MAIN POWER WINDOW AND DOOR LOCK/UNLOCK SWITCH 15
- Reference Value 15

WIRING DIAGRAM 17

POWER WINDOW SYSTEM 17
- Wiring Diagram 17

BASIC INSPECTION 25

DIAGNOSIS AND REPAIR WORKFLOW 25
- Work Flow 25

INSPECTION AND ADJUSTMENT 27

ADDITIONAL SERVICE WHEN REMOVING BATTERY NEGATIVE TERMINAL 27
- ADDITIONAL SERVICE WHEN REMOVING BATTERY NEGATIVE TERMINAL : Description 27
- ADDITIONAL SERVICE WHEN REMOVING BATTERY NEGATIVE TERMINAL : Special Repair Requirement 27

ADDITIONAL SERVICE WHEN REPLACING CONTROL UNIT 27
- ADDITIONAL SERVICE WHEN REPLACING CONTROL UNIT : Description 27
- ADDITIONAL SERVICE WHEN REPLACING CONTROL UNIT : Special Repair Requirement 27

DTC/CIRCUIT DIAGNOSIS 29

POWER SUPPLY AND GROUND CIRCUIT 29

BCM (BODY CONTROL SYSTEM) (WITH INTELLIGENT KEY SYSTEM) 29
BCM (BODY CONTROL SYSTEM) (WITH INTELLIGENT KEY SYSTEM) : Diagnosis Procedure 29

BCM (BODY CONTROL SYSTEM) (WITHOUT INTELLIGENT KEY SYSTEM) 29
BCM (BODY CONTROL SYSTEM) (WITHOUT INTELLIGENT KEY SYSTEM) : Diagnosis Procedure 29

POWER WINDOW MAIN SWITCH 30
POWER WINDOW MAIN SWITCH : Diagnosis Procedure 30

FRONT POWER WINDOW SWITCH (PASSENGER SIDE) 31
FRONT POWER WINDOW SWITCH (PASSENGER SIDE) : Diagnosis Procedure 31

REAR POWER WINDOW SWITCH 32
REAR POWER WINDOW SWITCH : Diagnosis Procedure 32

FRONT POWER WINDOW SWITCH (PASSENGER SIDE) 34
Description 34
Component Function Check 34
Diagnosis Procedure 34
Component Inspection 35

REAR POWER WINDOW SWITCH 36
Description 36
Component Function Check 36
Diagnosis Procedure 36
Component Inspection 37

POWER WINDOW MOTOR 38

DRIVER SIDE 38
DRIVER SIDE : Description 38
DRIVER SIDE : Component Function Check 38
DRIVER SIDE : Diagnosis Procedure 38
DRIVER SIDE : Component Inspection 39

PASSENGER SIDE 39
PASSENGER SIDE : Description 39
PASSENGER SIDE : Component Function Check ... 39
PASSENGER SIDE : Diagnosis Procedure 39
PASSENGER SIDE : Component Inspection 40

REAR LH 41
REAR LH : Description 41
REAR LH : Component Function Check 41
REAR LH : Diagnosis Procedure 41
REAR LH : Component Inspection 42

REAR RH 42
REAR RH : Description 42
REAR RH : Component Function Check 42
REAR RH : Diagnosis Procedure 43
REAR RH : Component Inspection 44

ENCODER CIRCUIT 45
Description 45
Component Function Check 45
Diagnosis Procedure 45

POWER WINDOW RELAY 48
Description 48
Component Function Check 48
Diagnosis Procedure 48
Component Inspection 49

DOOR SWITCH 50

WITH INTELLIGENT KEY 50
WITH INTELLIGENT KEY : Component Function Check 50
WITH INTELLIGENT KEY : Diagnosis Procedure... 50
WITH INTELLIGENT KEY : Component Inspection 51

WITHOUT INTELLIGENT KEY 51
WITHOUT INTELLIGENT KEY : Description 51
WITHOUT INTELLIGENT KEY : Component Function Check 51
WITHOUT INTELLIGENT KEY : Diagnosis Procedure 52
WITHOUT INTELLIGENT KEY : Component Inspection 53

SYMPTOM DIAGNOSIS 54

POWER WINDOW CONTROL SYSTEM SYMPTOMS 54
Symptom Table 54

NONE OF THE POWER WINDOWS CAN BE OPERATED USING ANY SWITCH 55
Diagnosis Procedure 55

DRIVER SIDE POWER WINDOW DOES NOT OPERATE 56
Diagnosis Procedure 56

FRONT PASSENGER SIDE POWER WINDOW DOES NOT OPERATE 57

WITH BOTH POWER WINDOW MAIN SWITCH AND FRONT PASSENGER SIDE POWER WINDOW SWITCH 57
WITH BOTH POWER WINDOW MAIN SWITCH AND FRONT PASSENGER SIDE POWER WINDOW SWITCH : Diagnosis Procedure 57

WITH FRONT POWER WINDOW SWITCH ONLY ... 57
WITH FRONT POWER WINDOW SWITCH ONLY : Diagnosis Procedure 57

REAR LH SIDE POWER WINDOW DOES NOT OPERATE 58

WITH BOTH POWER WINDOW MAIN SWITCH AND REAR POWER WINDOW SWITCH LH **58**
WITH BOTH POWER WINDOW MAIN SWITCH AND REAR POWER WINDOW SWITCH LH : Diagnosis Procedure 58

WITH REAR POWER WINDOW SWITCH LH ONLY **58**
WITH REAR POWER WINDOW SWITCH LH ONLY : Diagnosis Procedure 58

REAR RH SIDE POWER WINDOW DOES NOT OPERATE **59**

WITH BOTH POWER WINDOW MAIN SWITCH AND REAR POWER WINDOW SWITCH RH **59**
WITH BOTH POWER WINDOW MAIN SWITCH AND REAR POWER WINDOW SWITCH RH : Diagnosis Procedure 59

WITH REAR POWER WINDOW SWITCH RH ONLY **59**
WITH REAR POWER WINDOW SWITCH RH ONLY : Diagnosis Procedure 59

ANTI-PINCH SYSTEM DOES NOT OPERATE NORMALLY (DRIVER SIDE) **60**
Diagnosis Procedure 60

POWER WINDOW RETAINED POWER OPERATION DOES NOT OPERATE PROPERLY **61**
Diagnosis Procedure 61

AUTO OPERATION DOES NOT OPERATE BUT MANUAL OPERATE NORMALLY (DRIVER SIDE) **62**
Diagnosis Procedure 62

POWER WINDOW LOCK SWITCH DOES NOT FUNCTION **63**
Diagnosis Procedure 63

REMOVAL AND INSTALLATION **64**

MAIN POWER WINDOW AND DOOR LOCK/UNLOCK SWITCH **64**
Removal and Installation 64

POWER WINDOW AND DOOR LOCK/UNLOCK SWITCH RH **65**
Removal and Installation 65

REAR POWER WINDOW SWITCH **66**
Removal and Installation 66

PRECAUTION

PRECAUTIONS

Precaution for Supplemental Restraint System (SRS) "AIR BAG" and "SEAT BELT PRE-TENSIONER"

INFOID:0000000010335222

The Supplemental Restraint System such as “AIR BAG” and “SEAT BELT PRE-TENSIONER”, used along with a front seat belt, helps to reduce the risk or severity of injury to the driver and front passenger for certain types of collision. Information necessary to service the system safely is included in the SR and SB section of this Service Manual.

WARNING:

- **To avoid rendering the SRS inoperative, which could increase the risk of personal injury or death in the event of a collision which would result in air bag inflation, all maintenance must be performed by an authorized NISSAN/INFINITI dealer.**
- **Improper maintenance, including incorrect removal and installation of the SRS, can lead to personal injury caused by unintentional activation of the system. For removal of Spiral Cable and Air Bag Module, see the SR section.**
- **Do not use electrical test equipment on any circuit related to the SRS unless instructed to in this Service Manual. SRS wiring harnesses can be identified by yellow and/or orange harnesses or harness connectors.**

PRECAUTIONS WHEN USING POWER TOOLS (AIR OR ELECTRIC) AND HAMMERS

WARNING:

- **When working near the Airbag Diagnosis Sensor Unit or other Airbag System sensors with the Ignition ON or engine running, DO NOT use air or electric power tools or strike near the sensor(s) with a hammer. Heavy vibration could activate the sensor(s) and deploy the air bag(s), possibly causing serious injury.**
- **When using air or electric power tools or hammers, always switch the Ignition OFF, disconnect the battery and wait at least three minutes before performing any service.**

Precaution for Work

INFOID:0000000010336465

- When removing or disassembling each component, be careful not to damage or deform it. If a component may be subject to interference, be sure to protect it with a shop cloth.
- When removing (disengaging) components with a screwdriver or similar tool, be sure to wrap the component with a shop cloth or vinyl tape to protect it.
- Protect the removed parts with a shop cloth and prevent them from being dropped.
- Replace a deformed or damaged clip.
- If a part is specified as a non-reusable part, always replace it with a new one.
- Be sure to tighten bolts and nuts securely to the specified torque.
- After installation is complete, be sure to check that each part works properly.
- Follow the steps below to clean components:
- Water soluble dirt:
- Dip a soft cloth into lukewarm water, wring the water out of the cloth and wipe the dirty area.
- Then rub with a soft, dry cloth.
- Oily dirt:
- Dip a soft cloth into lukewarm water with mild detergent (concentration: within 2 to 3%) and wipe the dirty area.
- Then dip a cloth into fresh water, wring the water out of the cloth and wipe the detergent off.
- Then rub with a soft, dry cloth.
- Do not use organic solvent such as thinner, benzene, alcohol or gasoline.
- For genuine leather seats, use a genuine leather seat cleaner.

PREPARATION

PREPARATION

Special Service Tool

INFOID:0000000010336464

The actual shape of the tools may differ from those illustrated here.

Tool number (TechMate No.) Tool name	Description
— (J-46534) Trim Tool Set 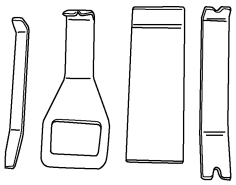 AWJIA0483ZZ	Removing trim components

Commercial Service Tools

INFOID:0000000010335223

(TechMate No.) Tool name	Description
(—) Power tool 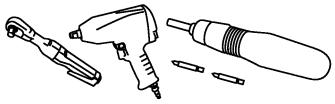 PIIB1407E	Loosening nuts, screws and bolts

SYSTEM DESCRIPTION

COMPONENT PARTS

Component Parts Location

INFOID:0000000010227738

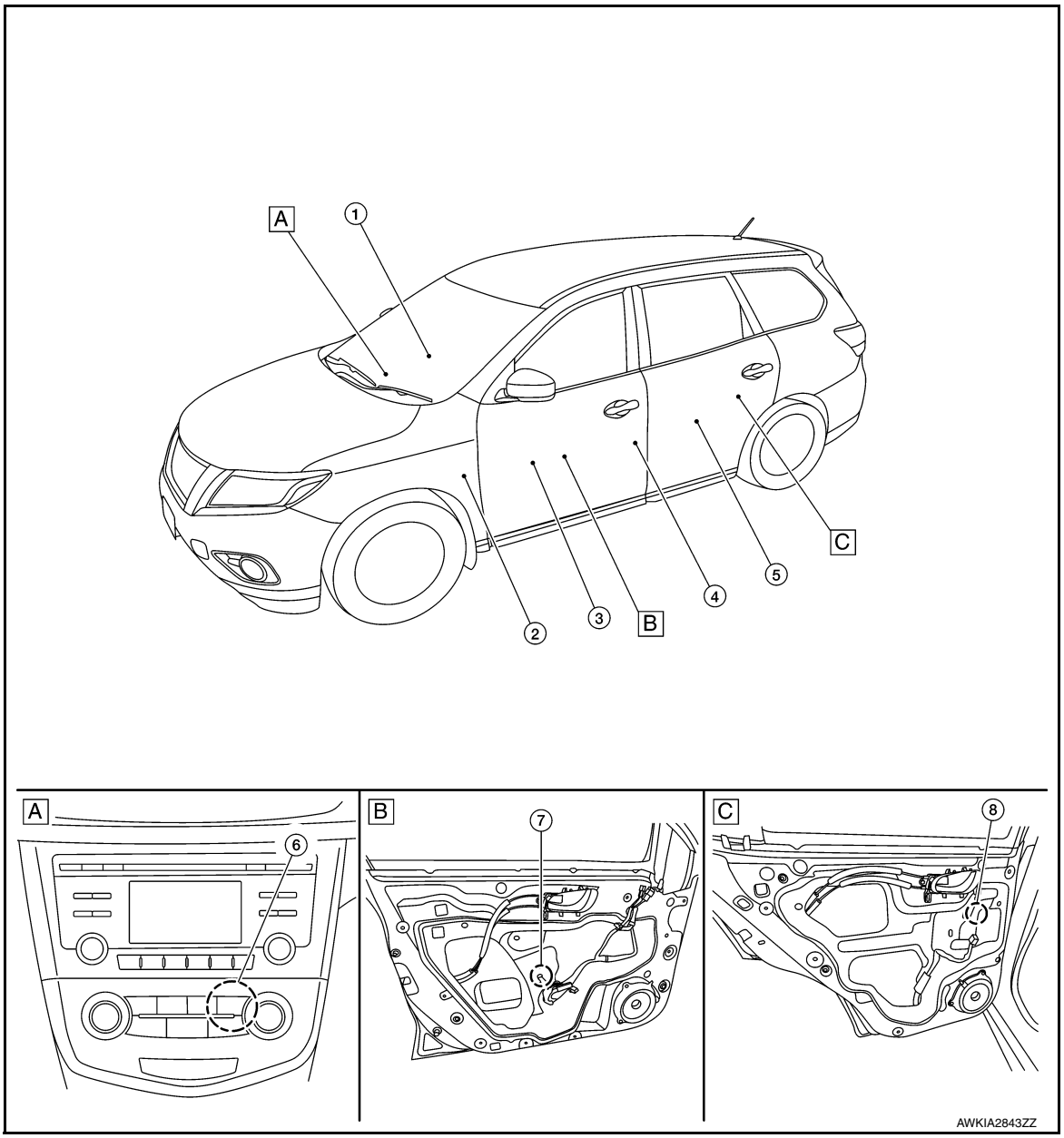

A. A/C switch assembly B. View with front door finisher removed C. View with rear door finisher removed

No.	Component parts	Function
1.	Front power window switch	Refer to PWC-7, "Power Window Switch".
2.	BCM	• Supplies power supply to power window relay. • Controls retained power. • Refer to BCS-7, "BODY CONTROL SYSTEM : Component Parts Location" for detailed installation location.
3.	Main power window and door lock/unlock switch	Refer to PWC-7, "Power Window Main Switch".

No.	Component parts	Function
4.	Front door switch LH (RH similar)	• Inputs door open/close condition to BCM. • Refer to DLK-24, "Front Door Switch".
5.	Rear power window switch LH (RH similar)	Refer to PWC-7, "Power Window Switch".
6.	Power window relay	Operates the power window system with the control signal from the BCM.
7.	Front power window motor LH (RH similar)	Refer to PWC-7, "Power Window Motor".
8.	Rear power window motor LH (RH similar)	Refer to PWC-7, "Power Window Motor".

Power Window Main Switch

INFOID:0000000010227739

- Main power window and door lock/unlock switch controls all power windows.
- Main power window and door lock/unlock switch integrates UP/DOWN switch, power window lock switch, and door lock/unlock switch.
- Main power window and door lock/unlock switch controls power window lock function, AUTO UP/DOWN function, and anti-pinch function.

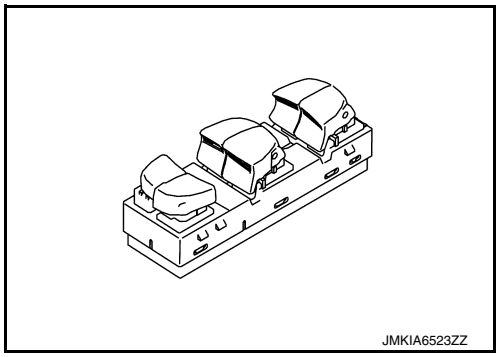

Power Window Switch

INFOID:0000000010227740

- Each power window switch transmits UP/DOWN signal to each motor.
- Each power window switch transmits UP/DOWN signal from power window main switch to each motor.

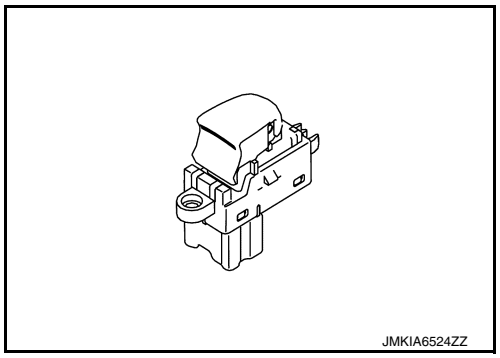

Power Window Motor

INFOID:0000000010227741

- Integrates the encoder and power window motor (front driver side).
- Starts operation according to signals from main power window and door lock/unlock switch.
- Transmits front power window motor (driver side) rotation as a pulse signal to power window main switch.
- Excepting power window motor for driver door, starts operation according to signals from main power window and door lock/unlock switch or each power window switches.

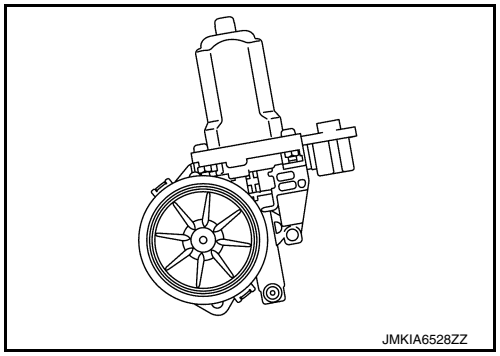

SYSTEM

System Description

INFOID:0000000010227742

SYSTEM DIAGRAM

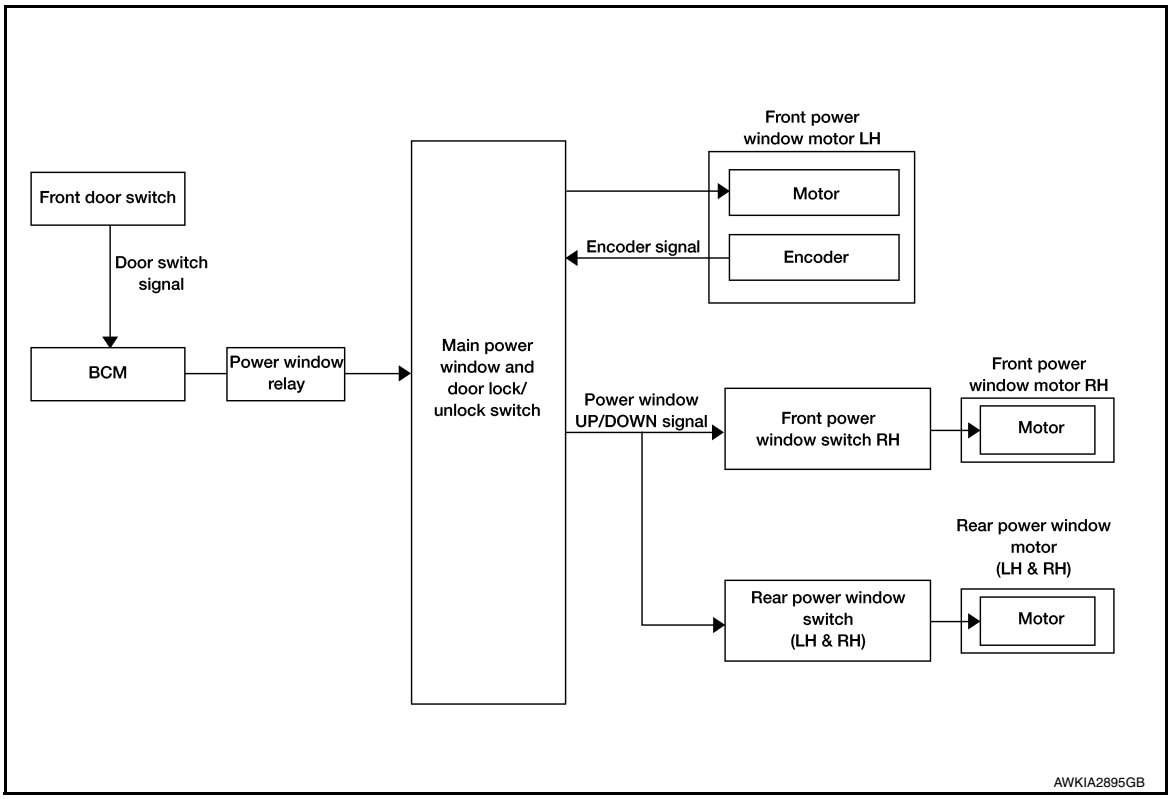

POWER WINDOW OPERATION

- Main power window and door lock/unlock switch can open/close all windows.
- Front and rear power window switches can open/close the corresponding windows.

POWER WINDOW AUTO-OPERATION (FRONT DRIVER SIDE)

- AUTO UP/DOWN operation can be performed when main power window and door lock/unlock switch turns to AUTO.
- Encoder continues detecting the movement of power window motor and transmits to power window switch as the encoder pulse signal while power window motor is operating.
- Power window switch reads the changes of encoder signal and stops AUTO operation when door glass is at fully opened/closed position.
- Power window motor is operable in case encoder is malfunctioning.

RETAINED POWER OPERATION

Retained power operation is an additional power supply function that enables power window system to operate for 45 seconds even when power switch is turned OFF.

RETAINED POWER CANCEL CONDITIONS

- Front door CLOSE (door switch OFF) → OPEN (door switch ON).
- When power switch is ON again.
- When timer time passes (45 seconds).

POWER WINDOW LOCK

Ground circuit inside main power window and door lock/unlock switch shuts off when power window lock switch is ON. This inhibits power window switch operation except with the main power window and door lock/ unlock switch.

ANTI-PINCH SYSTEM (FRONT DRIVER SIDE)

- Pinch foreign material in the door glass during AUTO-UP operation, and it is the anti-pinch function that lowers the door glass 150 mm (5.9 in.) when detected.

- Encoder continues detecting the movement of front power window motor (driver side) and transmits to main power window and door lock/unlock switch as the encoder pulse signal while front power window motor (driver side) is operating.
- Resistance is applied to the front power window motor (driver side) rotation that changes the frequency of encoder pulse signal if foreign material is trapped in the door glass.
- Main power window and door lock/unlock switch controls to lower the window glass for 150 mm (5.9 in) after it detects encoder pulse signal frequency change.

OPERATION CONDITION

- When front door glass (driver side) AUTO-UP operation is performed (anti-pinch function does not operate just before the door glass closes and is fully closed).

NOTE:

Depending on environment and driving conditions, if a similar impact or load is applied to the door glass, it may lower.

Fail Safe

INFOID:0000000010227743

FAIL-SAFE CONTROL

Switches to fail-safe control when malfunction is detected in encoder signal that detects up/down speed and direction of door glass. Switches to fail-safe control when error beyond regulation value is detected between the fully closed position and the actual position of the glass.

Error	Error condition
Pulse sensor malfunction	When only one side of pulse signal is being detected for more than the specified value.
Both pulse sensors malfunction	When both pulse signals have not been detected for more than the specified value during glass open/close operation.
Pulse direction malfunction	When the pulse signal that is detected during glass open/close operation detects the opposite condition of power window motor operating direction.
Glass recognition position malfunction 1	When it detects the error between glass fully closed position in power window switch memory and actual fully closed position during glass open/close operation is more than the specified value.
Glass recognition position malfunction 2	When it detects pulse count more than the value of glass full stroke during glass open/close operation.

It changes to condition before initialization and the following functions do not operate when switched to fail-safe control.

- Auto-up operation
- Anti-pinch function
- Retained power function

Perform initial operation to recover when switched to fail-safe mode. However, it switches back to fail-safe control when malfunction is found in power window switch or in the motor.

DIAGNOSIS SYSTEM (BCM) (WITH INTELLIGENT KEY SYSTEM)

COMMON ITEM

COMMON ITEM : CONSULT Function (BCM - COMMON ITEM)

INFOID:0000000010288480

APPLICATION ITEM

CONSULT performs the following functions via CAN communication with BCM.

Direct Diagnostic Mode	Description
Ecu Identification	The BCM part number is displayed.
Self Diagnostic Result	The BCM self diagnostic results are displayed.
Data Monitor	The BCM input/output data is displayed in real time.
Active Test	The BCM activates outputs to test components.
Work support	The settings for BCM functions can be changed.
Configuration	• The vehicle specification can be read and saved. • The vehicle specification can be written when replacing BCM.
CAN Diag Support Mntr	The result of transmit/receive diagnosis of CAN communication is displayed.

SYSTEM APPLICATION

BCM can perform the following functions.

System	Sub System	Direct Diagnostic Mode						
		Ecu Identification	Self Diagnostic Result	Data Monitor	Active Test	Work support	Configuration	CAN Diag Support Mntr
Door lock	DOOR LOCK		×	×	×	×		
Rear window defogger	REAR DEFOGGER			×	×	×		
Warning chime	BUZZER			×	×			
Interior room lamp timer	INT LAMP			×	×	×		
Exterior lamp	HEADLAMP			×	×	×		
Wiper and washer	WIPER			×	×	×		
Turn signal and hazard warning lamps	FLASHER			×	×			
Intelligent Key system	INTELLIGENT KEY		×	×	×	×		
Combination switch	COMB SW			×				
BCM	BCM	×	×			×	×	×
Immobilizer	IMMU		×	×	×			
Interior room lamp battery saver	BATTERY SAVER			×	×			
Back door open	TRUNK			×				
Vehicle security system	THEFT ALM			×	×	×		
RAP system	RETAINED PWR			×				
Signal buffer system	SIGNAL BUFFER			×				
TPMS	AIR PRESSURE MONITOR		×	×	×	×		

RETAINED PWR

RETAINED PWR : CONSULT Function (BCM - RETAINED PWR)

INFOID:0000000010288481

DATA MONITOR

Monitor Item [Unit]	Description
DOOR SW-DR [On/Off]	Indicates condition of front door switch LH.
DOOR SW-AS [On/Off]	Indicates condition of front door switch RH.

DIAGNOSIS SYSTEM (BCM) (WITHOUT INTELLIGENT KEY SYSTEM) COMMON ITEM

COMMON ITEM : CONSULT Function (BCM - COMMON ITEM)

INFOID:0000000010288482

APPLICATION ITEM

CONSULT performs the following functions via CAN communication with BCM.

Direct Diagnostic Mode	Description
Ecu Identification	The BCM part number is displayed.
Self Diagnostic Result	The BCM self diagnostic results are displayed.
Data Monitor	The BCM input/output data is displayed in real time.
Active Test	The BCM activates outputs to test components.
Work support	The settings for BCM functions can be changed.
Configuration	• The vehicle specification can be read and saved. • The vehicle specification can be written when replacing BCM.
CAN Diag Support Mntr	The result of transmit/receive diagnosis of CAN communication is displayed.

SYSTEM APPLICATION

BCM can perform the following functions.

System	Sub System	Direct Diagnostic Mode						
		Ecu Identification	Self Diagnostic Result	Data Monitor	Active Test	Work support	Configuration	CAN Diag Support Mntr
Door lock	DOOR LOCK			×	×	×		
Rear window defogger	REAR DEFOGGER			×	×	×		
Warning chime	BUZZER			×	×			
Interior room lamp timer	INT LAMP			×	×	×		
Remote keyless entry system	MULTI REMOTE ENT					×		
Exterior lamp	HEADLAMP			×	×			
Wiper and washer	WIPER			×	×	×		
Turn signal and hazard warning lamps	FLASHER			×	×			
Combination switch	COMB SW			×				
BCM	BCM	×	×			×	×	×
Immobilizer	IMMU		×		×			
Interior room lamp battery saver	BATTERY SAVER			×	×			
Back door open	TRUNK			×				
Vehicle security system	THEFT ALM			×	×	×		
RAP system	RETAINED PWR			×				
TPMS	AIR PRESSURE MONITOR		×	×	×	×		

RETAINED PWR

RETAINED PWR : CONSULT Function (BCM - RETAINED PWR)

INFOID:0000000010288483

DATA MONITOR

Monitor Item [Unit]	Description
DOOR SW-DR [On/Off]	Indicates condition of front door switch LH.
DOOR SW-AS [On/Off]	Indicates condition of front door switch RH.

ECU DIAGNOSIS INFORMATION

BCM (BODY CONTROL MODULE)

List of ECU Reference

INFOID:0000000010228070

ECU	Reference
BCM (with Intelligent Key system)	BCS-28, "Reference Value"
	BCS-47, "Fail Safe"
	BCS-47, "DTC Inspection Priority Chart"
	BCS-48, "DTC Index"
BCM (without Intelligent Key system)	BCS-96, "Reference Value"
	BCS-107, "Fail Safe"
	BCS-107, "DTC Inspection Priority Chart"
	BCS-108, "DTC Index"

MAIN POWER WINDOW AND DOOR LOCK/UNLOCK SWITCH

Reference Value

INFOID:0000000010290244

TERMINAL LAYOUT

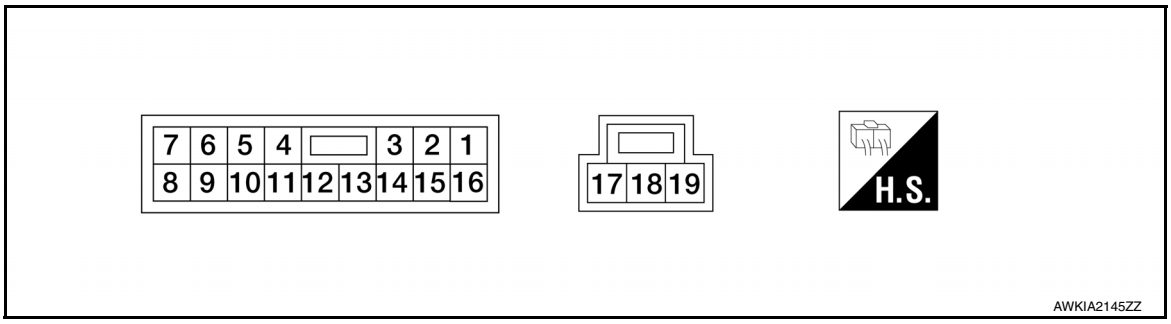

PHYSICAL VALUES

Terminal No. (Wire color)		Description		Condition	Voltage (Approx.)
+	-	Signal name	Input/ Output		
1 (B)	Ground	Ground	—	—	0
2 (LA/GR)	16 (LA/SB)	Front power window motor RH DOWN signal	Output	When front RH switch in power window main switch is operated DOWN.	Battery voltage
4 (R)	12 (Y)	Encoder pulse signal 2	Input	When power window motor operates.	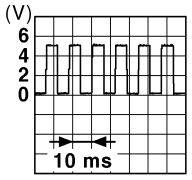 JMKIA0070GB
5 (W)	12 (Y)	Encoder pulse signal 1	Input	When power window motor operates.	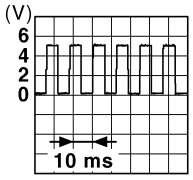 JMKIA0070GB
6 (P)	Ground	Rear power window motor RH DOWN signal	Output	When rear RH switch in power window main switch is operated DOWN.	Battery voltage
7 (LG)	Ground	Rear power window motor RH UP signal	Output	When rear RH switch in power window main switch is operated UP.	Battery voltage
8 (LA/Y)	Ground	Rear power window motor LH DOWN signal	Output	When rear LH switch in power window main switch is operated DOWN.	Battery voltage
9 (LA/W)	Ground	Rear power window motor LH UP signal	Output	When rear LH switch in power window main switch is operated UP.	Battery voltage

Terminal No. (Wire color)		Description		Condition	Voltage (Approx.)
+	-	Signal name	Input/ Output		
10 (SB)	Ground	RAP signal	Input	IGN SW ON	Battery voltage
				Within 45 second after ignition switch is turned to OFF.	Battery voltage
				When driver side or passenger side door is opened during retained power operation.	0
12 (Y)	Ground	Encoder ground	—	—	0
14 (G)	Ground	Encoder power supply	Output	When ignition switch ON or power window timer operates.	10
16 (LA/SB)	2 (LA/GR)	Front power window motor RH UP signal	Output	When front RH switch in power window main switch is operated UP.	Battery voltage
17 (LA/L)	19 (LA/BR)	Front power window motor LH UP signal	Output	When front LH switch in power window main switch is operated UP.	Battery voltage
18 (LA/R)	Ground	Battery power supply	Input	—	Battery voltage
19 (LA/BR)	17 (LA/L)	Front power window motor LH DOWN signal	Output	When front LH switch in power window main switch is operated DOWN.	Battery voltage

WIRING DIAGRAM

POWER WINDOW SYSTEM

Wiring Diagram

INFOID:0000000009798816

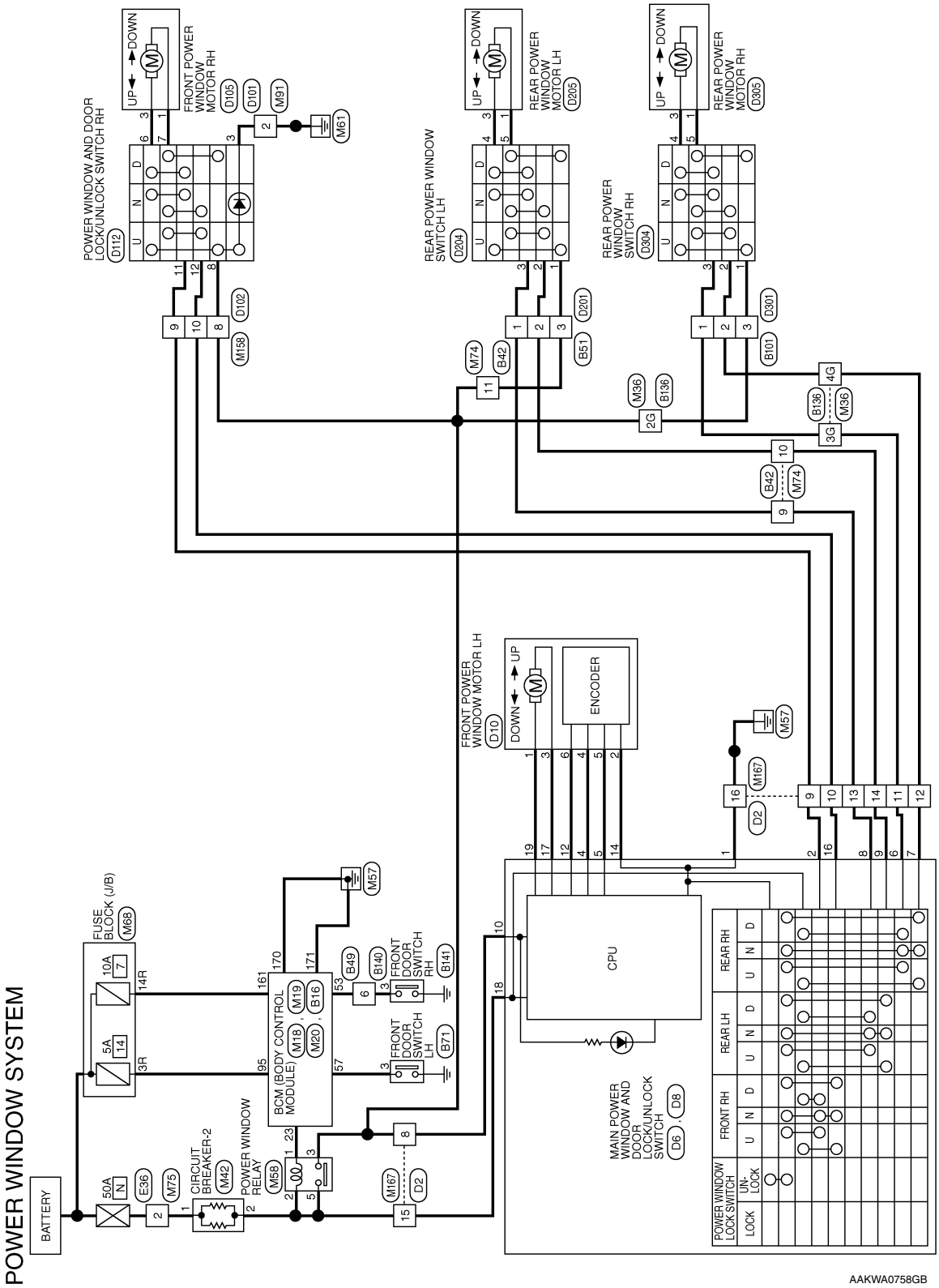

POWER WINDOW SYSTEM CONNECTORS

Connector No.	M18
Connector Name	BCM (BODY CONTROL MODULE)
Connector Color	GRAY

H.S.

20	19	18	17	16	15	14	13	12	11	10	9	8	7	6	5	4	3	2	1
40	39	38	37	36	35	34	33	32	31	30	29	28	27	26	25	24	23	22	21

Terminal No.	Color of Wire	Signal Name
23	G	0 WL AUTHORIZATION RL

Connector No.	M19
Connector Name	BCM (BODY CONTROL MODULE)
Connector Color	BLACK

H.S.

100	99	98	97	96	95	94	93	92	91	90	89	88	87	86	85	84	83	82	81
120	119	118	117	116	115	114	113	112	111	110	109	108	107	106	105	104	103	102	101

Terminal No.	Color of Wire	Signal Name
95	V	I SHORTING PIN

Connector No.	M20
Connector Name	BCM (BODY CONTROL MODULE)
Connector Color	BROWN

H.S.

167	166	165	164											163	162	161			
176	175	174	173	172										171	170	169	168		

Terminal No.	Color of Wire	Signal Name
161	W	I PWR ECU
170	B	I GND1
171	B	I GND2

Connector No.	M36
Connector Name	WIRE TO WIRE
Connector Color	WHITE

H.S.

1G	2G	3G	4G	5G															
6G	7G	8G	9G	10G															
11G	12G	13G	14G	15G	16G	17G	18G	19G	20G	21G									
22G	23G	24G	25G	26G	27G	28G	29G	30G											
31G	32G	33G	34G	35G	36G	37G	38G	39G	40G	41G									
42G	43G	44G	45G	46G	47G	48G	49G	50G											
51G	52G	53G	54G	55G	56G	57G	58G	59G	60G	61G									
62G	63G	64G	65G	66G	67G	68G	69G	70G											
71G	72G	73G	74G	75G	76G	77G	78G	79G	80G	81G									
82G	83G	84G	85G	86G	87G	88G	89G	90G											
91G	92G	93G	94G	95G															
96G	97G	98G	99G	100G															

Terminal No.	Color of Wire	Signal Name
2G	W	–
3G	Y	–
4G	BG	–

Connector No.	M42
Connector Name	CIRCUIT BREAKER-2
Connector Color	WHITE

H.S.

1	
2	

Terminal No.	Color of Wire	Signal Name
1	W	–
2	P	–

AAKIA1793GB

Connector No.	M58
Connector Name	POWER WINDOW RELAY
Connector Color	BLUE

H.S.

Terminal No.	Color of Wire	Signal Name
1	G	–
2	W	–
3	L	–
5	P	–

Connector No.	M68
Connector Name	FUSE BLOCK (J/B)
Connector Color	BROWN

H.S.

Terminal No.	Color of Wire	Signal Name
3R	V	–
14R	W	–

Connector No.	M74
Connector Name	WIRE TO WIRE
Connector Color	WHITE

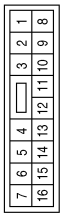

H.S.

Terminal No.	Color of Wire	Signal Name
9	G	–
10	R	–
11	LG	–

Connector No.	M75
Connector Name	WIRE TO WIRE
Connector Color	BLACK

H.S.

Terminal No.	Color of Wire	Signal Name
2	W	–

Connector No.	M91
Connector Name	WIRE TO WIRE
Connector Color	WHITE

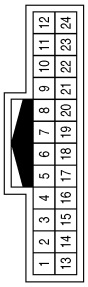

H.S.

Terminal No.	Color of Wire	Signal Name
2	GR	–

Connector No.	M158
Connector Name	WIRE TO WIRE
Connector Color	WHITE

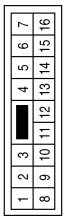

H.S.

Terminal No.	Color of Wire	Signal Name
8	SB	–
9	BR	–
10	GR	–

AAKIA1794GB

Connector No.	M167
Connector Name	WIRE TO WIRE
Connector Color	WHITE

H.S.

1	2	3		4	5	6	7
8	9	10	11	12	13	14	15	16

Terminal No.	Color of Wire	Signal Name
8	L	–
9	BR	–
10	GR	–
11	Y	–
12	BG	–
13	G	–
14	R	–
15	P	–
16	B	–

Connector No.	E36
Connector Name	WIRE TO WIRE
Connector Color	BLACK

H.S.

1
2

Terminal No.	Color of Wire	Signal Name
2	W	–

Connector No.	B16
Connector Name	BCM (BODY CONTROL MODULE)
Connector Color	GREEN

H.S.

60	59	58	57	56	55	54	53	52	51	50	49	48	47	46	45	44	43	42	41
80	79	78	77	76	75	74	73	72	71	70	69	68	67	66	65	64	63	62	61

Terminal No.	Color of Wire	Signal Name
53	SB	I AS DOOR2 SW
57	SB	I DR DOOR2 SW

Connector No.	B42
Connector Name	WIRE TO WIRE
Connector Color	WHITE

H.S.

1	2	3		4	5	6	7
8	9	10	11	12	13	14	15	16

Terminal No.	Color of Wire	Signal Name
9	P	–
10	R	–
11	LA/V	–

Connector No.	B49
Connector Name	WIRE TO WIRE
Connector Color	WHITE

H.S.

1	2	3		4	5
6	7	8	9	10	11	12

Terminal No.	Color of Wire	Signal Name
6	SB	–

Connector No.	B51
Connector Name	WIRE TO WIRE
Connector Color	WHITE

H.S.

1	2	3		4	5
6	7	8	9	10	11	12

Terminal No.	Color of Wire	Signal Name
1	P	–
2	R	–
3	LA/V	–

AAKIA1795GB

Connector No.	B71
Connector Name	FRONT DOOR SWITCH LH
Connector Color	WHITE

H.S.

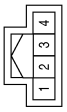

Terminal No.	Color of Wire	Signal Name
3	SB	–

Connector No.	B101
Connector Name	WIRE TO WIRE
Connector Color	WHITE

H.S.

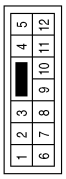

Terminal No.	Color of Wire	Signal Name
1	Y	–
2	L	–
3	LA/P	–

Connector No.	B136
Connector Name	WIRE TO WIRE
Connector Color	WHITE

H.S.

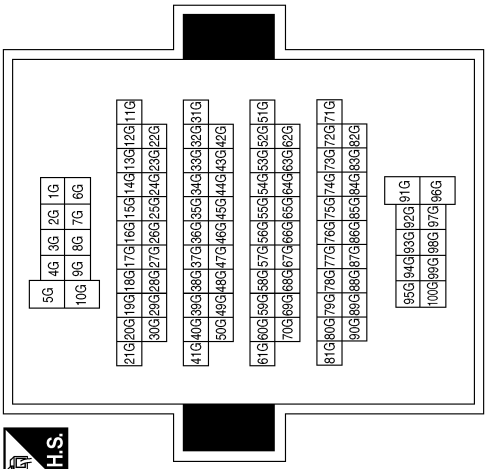

Terminal No.	Color of Wire	Signal Name
2G	LA/P	–
3G	Y	–
4G	L	–

Connector No.	B140
Connector Name	WIRE TO WIRE
Connector Color	WHITE

H.S.

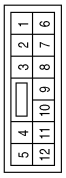

Terminal No.	Color of Wire	Signal Name
6	GR	–

Connector No.	B141
Connector Name	FRONT DOOR SWITCH RH
Connector Color	WHITE

H.S.

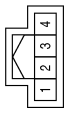

Terminal No.	Color of Wire	Signal Name
3	GR	–

AAKIA1796GB

Connector No.	D2
Connector Name	WIRE TO WIRE
Connector Color	WHITE

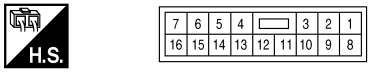

Terminal No.	Color of Wire	Signal Name
8	SB	–
9	LA/GR	–
10	LA/SB	–
11	P	–
12	LG	–
13	LA/Y	–
14	LA/W	–
15	LA/R	–
16	B	–

Connector No.	D6
Connector Name	MAIN POWER WINDOW AND DOOR LOCK/UNLOCK SWITCH
Connector Color	WHITE

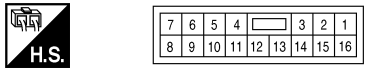

Terminal No.	Color of Wire	Signal Name
1	B	GND
2	LA/GR	MOTOR AS DOWN
3	–	–
4	R	ENCODER SIG-2 (ULP)
5	W	ENCODER SIG-1 (DLP)
6	P	MOTOR RR DOWN
7	LG	MOTOR RR UP
8	LA/Y	MOTOR RL DOWN
9	LA/W	MOTOR RL UP
10	SB	IGN
11	–	–
12	Y	ENCODER GND
13	–	–
14	G	ENCODER +
15	–	–
16	LA/SB	MOTOR AS UP

Connector No.	D8
Connector Name	MAIN POWER WINDOW AND DOOR LOCK/UNLOCK SWITCH
Connector Color	WHITE

Terminal No.	Color of Wire	Signal Name
17	LA/L	MOTOR DR UP
18	LA/R	B+
19	LA/BR	MOTOR DR DOWN

Connector No.	D10
Connector Name	FRONT POWER WINDOW MOTOR LH
Connector Color	GREEN

Terminal No.	Color of Wire	Signal Name
1	LA/BR	–
2	G	–
3	LA/L	–
4	R	–
5	W	–
6	Y	–

Connector No.	D101
Connector Name	WIRE TO WIRE
Connector Color	WHITE

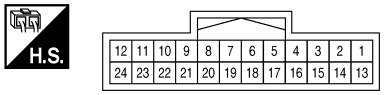

Terminal No.	Color of Wire	Signal Name
2	B	–

AAKIA1797GB

POWER WINDOW SYSTEM

Connector No.	D102
Connector Name	WIRE TO WIRE
Connector Color	WHITE

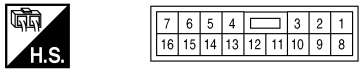

Terminal No.	Color of Wire	Signal Name
8	LA/GR	–
9	LA/Y	–
10	LA/BR	–

Connector No.	D105
Connector Name	FRONT POWER WINDOW MOTOR RH (WITH LEFT FRONT ONLY AUTO UP/DOWN)
Connector Color	GREEN

Terminal No.	Color of Wire	Signal Name
1	LA/R	–
2	–	–
3	LA/L	–
4	–	–
5	–	–
6	–	–

Connector No.	D112
Connector Name	POWER WINDOW AND DOOR LOCK/UNLOCK SWITCH RH
Connector Color	WHITE

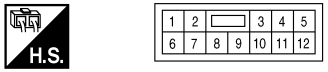

Terminal No.	Color of Wire	Signal Name
3	B	–
6	LA/L	–
7	LA/R	–
8	LA/GR	–
11	LA/Y	–
12	LA/BR	–

Connector No.	D201
Connector Name	WIRE TO WIRE
Connector Color	WHITE

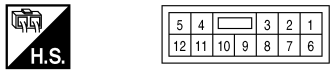

Terminal No.	Color of Wire	Signal Name
1	LA/Y	–
2	LA/BR	–
3	LA/GR	–

Connector No.	D204
Connector Name	REAR POWER WINDOW SWITCH LH
Connector Color	WHITE

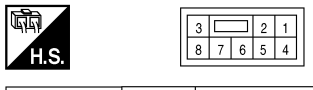

Terminal No.	Color of Wire	Signal Name
1	LA/GR	–
2	LA/BR	–
3	LA/Y	–
4	G	–
5	R	–
6	–	–
7	–	–
8	–	–

Connector No.	D205
Connector Name	REAR POWER WINDOW MOTOR LH
Connector Color	GREEN

Terminal No.	Color of Wire	Signal Name
1	R	–
2	–	–
3	G	–
4	–	–
5	–	–
6	–	–

AAKIA1798GB

Connector No.	D301
Connector Name	WIRE TO WIRE
Connector Color	WHITE

H.S.

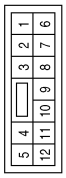

Terminal No.	Color of Wire	Signal Name
1	LA/Y	–
2	LA/BR	–
3	LA/GR	–

Connector No.	D304
Connector Name	REAR POWER WINDOW SWITCH RH
Connector Color	WHITE

H.S.

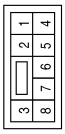

Terminal No.	Color of Wire	Signal Name
1	LA/GR	–
2	LA/BR	–
3	LA/Y	–
4	G	–
5	R	–
6	–	–
7	–	–
8	–	–

Connector No.	D305
Connector Name	REAR POWER WINDOW MOTOR RH
Connector Color	GREEN

H.S.

Terminal No.	Color of Wire	Signal Name
1	R	–
2	–	–
3	G	–
4	–	–
5	–	–
6	–	–

AAKIA1804GB

BASIC INSPECTION

DIAGNOSIS AND REPAIR WORKFLOW

Work Flow

INFOID:0000000010223739

OVERALL SEQUENCE

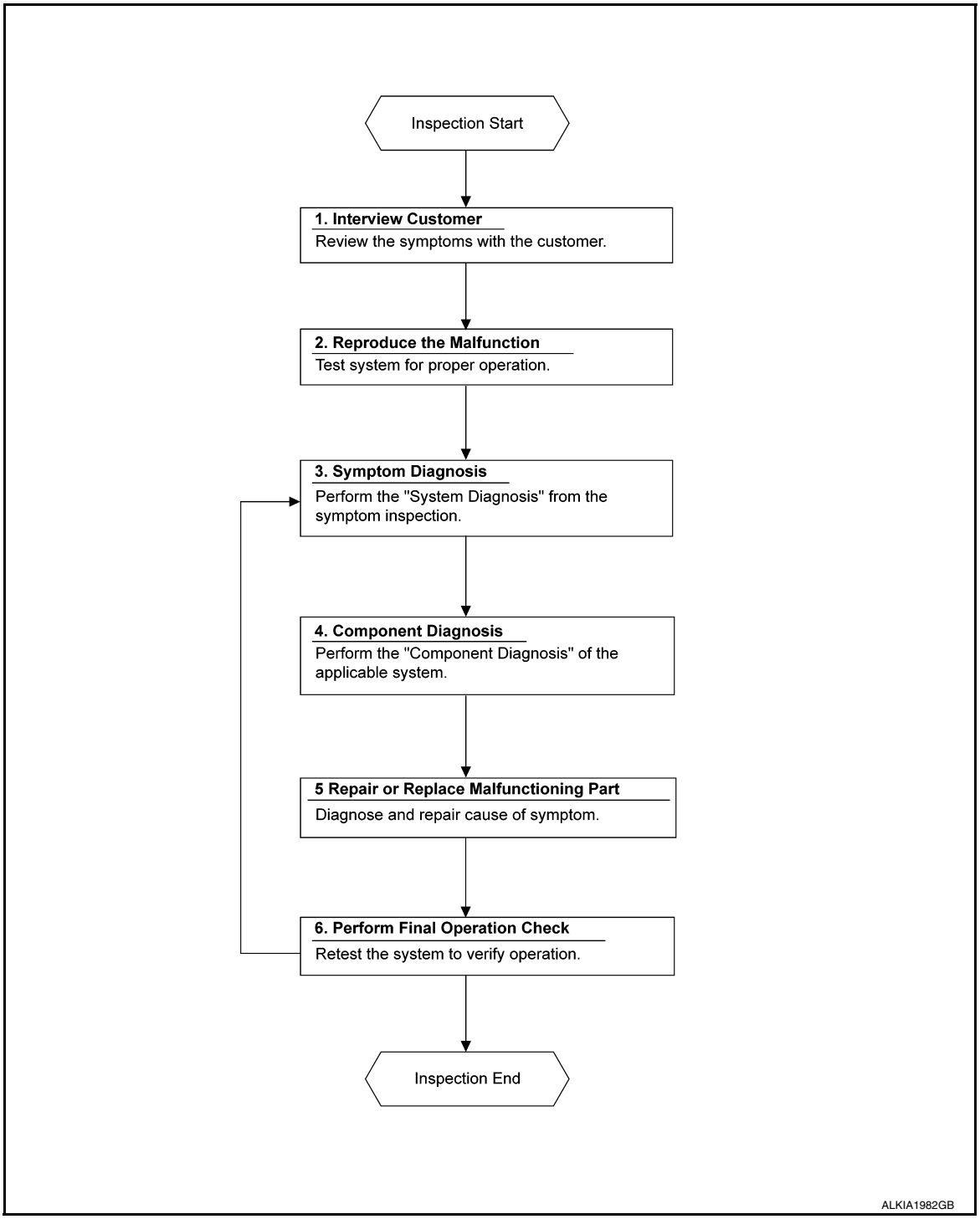

DETAILED FLOW

1. OBTAIN INFORMATION ABOUT SYMPTOM

Interview the customer to obtain as much information as possible about the conditions and environment under which the malfunction occurred.

>> GO TO 2.

2. CONFIRM THE SYMPTOM

Check the malfunction on the vehicle that the customer describes.
Inspect the relation of the symptoms and the condition when the symptoms occur.

>> GO TO 3.

3. IDENTIFY THE MALFUNCTIONING SYSTEM WITH SYMPTOM DIAGNOSIS

Use Symptom diagnosis from the symptom inspection result in step 2 and then identify where to start performing the diagnosis based on possible causes and symptoms.

>> GO TO 4.

4. PERFORM THE COMPONENT DIAGNOSIS OF THE OF THE APPLICABLE SYSTEM

Perform the diagnosis with Component diagnosis of the applicable system.

>> GO TO 5.

5. REPAIR OR REPLACE THE MALFUNCTIONING PARTS

Repair or replace the specified malfunctioning parts.

>> GO TO 6.

6. FINAL CHECK

Check that malfunctions are not reproduced when obtaining the malfunction information from the customer, referring to the symptom inspection result in step 2.

Are the malfunctions corrected?

YES >> Inspection End.
NO >> GO TO 3.

INSPECTION AND ADJUSTMENT

ADDITIONAL SERVICE WHEN REMOVING BATTERY NEGATIVE TERMINAL

ADDITIONAL SERVICE WHEN REMOVING BATTERY NEGATIVE TERMINAL : Description

INFOID:0000000009798769

If any of the following work has been done Initial setting is necessary.
- Power supply to the main power window and door lock/unlock switch or power window motor is cut off by the removal
  of battery terminal or the battery fuse is blown.
- Disconnection and connection of main power window and door lock/unlock switch harness connector.
- Removal and installation of motor from regulator assembly.
- Operation of regulator assembly as an independent unit.
- Removal and installation of glass.
- Removal and installation of door glass run.

The following specified operations can not be performed under the non-initialized condition.
- Auto-up operation
- Anti-pinch function

ADDITIONAL SERVICE WHEN REMOVING BATTERY NEGATIVE TERMINAL : Special Repair Requirement

INFOID:0000000009798770

INITIALIZATION PROCEDURE
1. Disconnect battery minus terminal or main power and window door lock/unlock switch connector. Reconnect it after a minute or more.
2. Turn ignition switch ON.
3. Operate power window switch to fully open the window. (This operation is unnecessary if the window is already fully open)
4. Continue pulling the power window switch UP (AUTO-UP operation). Even after glass stops at fully closed position, keep pulling the switch for 2 seconds or more.
5. Initializing procedure is completely.
6. Inspect anti-pinch function.

CHECK ANTI-PINCH FUNCTION
1. Fully open the door window.
2. Place a piece of wood near fully closed position.
3. Close door glass completely with AUTO-UP.

- Check that glass lowers for approximately 150 mm (5.9 in) without pinching piece of wood and stops.
- Check that glass does not rise when operating the main power and door lock/unlock switch while lowering.

CAUTION:
- **Perform initial setting when auto-up operation or anti-pinch function does not operate normally.**
- **Check that AUTO-UP operates before inspection when system initialization is performed.**
- **Do not check with hands and other body parts because they may be pinched. Do not get pinched.**
- **It may switch to fail-safe mode if open/close operation is performed continuously without full close. Perform initial setting in that situation. Refer to BCS-47, "Fail Safe"**
- **Finish initial setting. Otherwise, next operation cannot be done.**

1. Auto-up operation
2. Anti-pinch function

ADDITIONAL SERVICE WHEN REPLACING CONTROL UNIT

ADDITIONAL SERVICE WHEN REPLACING CONTROL UNIT : Description

INFOID:0000000009798771

Refer to PWC-27, "ADDITIONAL SERVICE WHEN REMOVING BATTERY NEGATIVE TERMINAL : Description".

ADDITIONAL SERVICE WHEN REPLACING CONTROL UNIT : Special Repair Re-

quirement

INFOID:0000000009798772

Refer to PWC-27, "ADDITIONAL SERVICE WHEN REMOVING BATTERY NEGATIVE TERMINAL : Special Repair Requirement" for initialization procedure and check anti-pinch function.

DTC/CIRCUIT DIAGNOSIS

POWER SUPPLY AND GROUND CIRCUIT

BCM (BODY CONTROL SYSTEM) (WITH INTELLIGENT KEY SYSTEM)

BCM (BODY CONTROL SYSTEM) (WITH INTELLIGENT KEY SYSTEM) : Diagnosis Procedure

INFOID:0000000010288550

Regarding Wiring Diagram information, refer to BCS-50, "Wiring Diagram".

1. CHECK FUSE

Check that the following fuse is not blown.

Terminal No.	Signal name	Fuse No.
161	BCM power supply	7 (10A)

Is the fuse blown?

YES >> Replace the blown fuse after repairing the affected circuit.
NO >> GO TO 2.

2. CHECK POWER SUPPLY CIRCUIT

1. Disconnect BCM connector M20.
2. Check voltage between BCM connector M20 and ground.

BCM		Ground	Voltage (Approx.)
Connector	Terminal		
M20	161	—	Battery voltage

Is the inspection result normal?

YES >> GO TO 3.
NO >> Repair or replace harness or connectors.

3. CHECK GROUND CIRCUIT

Check continuity between BCM connector M20 and ground.

BCM		Ground	Continuity
Connector	Terminal		
M20	170	—	Yes
	171		

Is the inspection result normal?

YES >> Inspection End.
NO >> Repair or replace harness or connectors.

BCM (BODY CONTROL SYSTEM) (WITHOUT INTELLIGENT KEY SYSTEM)

BCM (BODY CONTROL SYSTEM) (WITHOUT INTELLIGENT KEY SYSTEM) : Diagnosis Procedure

INFOID:0000000010288551

Regarding Wiring Diagram information, refer to BCS-110, "Wiring Diagram".

1. CHECK FUSE

Check that the following fuse is not blown.

Terminal No.	Signal name	Fuse No.
161	BCM power supply	7 (10A)

Is the fuse blown?

YES >> Replace the blown fuse after repairing the affected circuit.
NO >> GO TO 2.

2. CHECK POWER SUPPLY CIRCUIT

1. Disconnect BCM connector M20.
2. Check voltage between BCM connector M20 and ground.

BCM		Ground	Voltage (Approx.)
Connector	Terminal		
M20	161	—	Battery voltage

Is the inspection result normal?

YES >> GO TO 3.
NO >> Repair or replace harness or connectors.

3. CHECK GROUND CIRCUIT

Check continuity between BCM connector M20 and ground.

BCM		Ground	Continuity
Connector	Terminal		
M20	170	—	Yes
	171		

Is the inspection result normal?

YES >> Inspection End.
NO >> Repair or replace harness or connectors.

POWER WINDOW MAIN SWITCH

POWER WINDOW MAIN SWITCH : Diagnosis Procedure

INFOID:0000000009798779

1. CHECK POWER SUPPLY CIRCUIT 1

1. Turn ignition OFF.
2. Disconnect main power window and door lock/unlock switch connector.
3. Turn ignition switch ON.
4. Check voltage between main power window and door lock/unlock switch harness connector and ground.

(+)		(–)	Voltage (Approx.)
Main power window and door lock/unlock switch			
Connector	Terminal		
D6	10	Ground	Battery voltage

Is the inspection result normal?

YES >> GO TO 2.
NO >> GO TO 4.

2. CHECK POWER SUPPLY CIRCUIT 2

1. Check voltage between main power window and door lock/unlock switch harness connector and ground.

(+)		(–)	Voltage (Approx.)
Main power window and door lock/unlock switch			
Connector	Terminal		
D6	18	Ground	Battery voltage

Is the inspection result normal?

YES >> GO TO 3.
NO >> Repair power supply circuit.

3. CHECK GROUND CIRCUIT

1. Turn ignition switch OFF.
2. Check continuity between main power window and door lock/unlock switch harness connector and ground.

Main power window and door lock/unlock switch		Ground	Continuity
Connector	Terminal		
D6	1		Yes

Is the inspection result normal?

YES >> Inspection End.
NO >> Repair or replace harness.

4. CHECK HARNESS CONTINUITY 1

1. Turn ignition switch OFF.
2. Disconnect power window relay connector.
3. Check continuity between power window relay harness connector and main power window and door lock/unlock switch harness connector.

Power window relay		Main power window and door lock/unlock switch		Continuity
Connector	Terminal	Connector	Terminal	
M58	3	D6	10	Yes

4. Check continuity between power window relay harness connector and ground.

Power window relay		Ground	Continuity
Connector	Terminal		
M58	3		No

Is the inspection result normal?

YES >> Refer to PWC-48, "Diagnosis Procedure".
NO >> Repair or replace harness.

FRONT POWER WINDOW SWITCH (PASSENGER SIDE)

FRONT POWER WINDOW SWITCH (PASSENGER SIDE) : Diagnosis Procedure

INFOID:0000000009798780

1. CHECK POWER SUPPLY CIRCUIT

1. Turn ignition switch OFF.
2. Disconnect front power window switch RH connector.
3. Turn ignition switch ON.
4. Check voltage between front power window switch RH harness connector and ground.

(+)		(–)	Condition	Voltage (Approx.)
Front power window switch RH				
Connector	Terminal			
D112	8	Ground	Ignition switch ON	Battery voltage

Is the inspection result normal?

YES >> Inspection End.
NO >> GO TO 2.

2. CHECK HARNESS CONTINUITY

1. Turn ignition switch OFF.
2. Disconnect power window relay connector.
3. Check continuity between power window relay harness connector and front power window switch RH harness connector.

Power window relay		Front power window switch RH		Continuity
Connector	Terminal	Connector	Terminal	
M58	3	D112	8	Yes

4. Check continuity between the power window relay harness connector and ground.

Power window relay		Ground	Continuity
Connector	Terminal		
M58	3		No

Is the inspection result normal?

YES >> Refer to PWC-48, "Diagnosis Procedure".
NO >> Repair or replace harness.

REAR POWER WINDOW SWITCH

REAR POWER WINDOW SWITCH : Diagnosis Procedure

INFOID:0000000009798781

1. CHECK POWER SUPPLY CIRCUIT

1. Turn ignition switch OFF.
2. Disconnect rear power window switch connector.
3. Turn ignition switch ON.
4. Check voltage between rear power window switch harness connector and ground.

(+)			(–)	Condition	Voltage (Approx.)
Rear power window switch					
Connector		Terminal			
LH	D204	1	Ground	Ignition switch ON	Battery voltage
RH	D304				

Is the inspection result normal?

YES >> Inspection End.
NO >> GO TO 2.

2. CHECK HARNESS CONTINUITY

1. Turn ignition switch OFF.
2. Disconnect power window relay connector.
3. Check continuity between power window relay harness connector and rear power window switch harness connector.

Power window relay		Rear power window switch			Continuity
Connector	Terminal	Connector		Terminal	
M58	3	LH	D204	1	Yes
		RH	D304		

4. Check continuity between power window relay harness connector and ground.

Power window relay		Ground	Continuity
Connector	Terminal		
M58	3		No

Is the inspection result normal?

YES >> Refer to PWC-48, "Diagnosis Procedure".
NO >> Repair or replace harness.

FRONT POWER WINDOW SWITCH (PASSENGER SIDE)

Description

INFOID:0000000009798782

Front power window motor RH will be operated if front power window switch RH is operated.

Component Function Check

INFOID:0000000009798783

1. CHECK FRONT POWER WINDOW SWITCH RH FUNCTION

Check front power window motor RH operation with front power window switch RH.

Is the inspection result normal?

YES >> Front power window switch RH is OK.
NO >> Refer to PWC-34, "Diagnosis Procedure".

Diagnosis Procedure

INFOID:0000000009798784

1. CHECK FRONT POWER WINDOW SWITCH RH INPUT SIGNAL

1. Turn ignition switch OFF.
2. Disconnect front power window switch RH connector.
3. Turn ignition switch ON.
4. Check voltage between front power window switch RH harness connector and ground.

(+)		(–)	Condition		Voltage (Approx.)
Front power window switch RH					
Connector	Terminal				
D112	12	Ground	Power window main switch RH	UP	Battery voltage
				DOWN	0
	11			UP	0
				DOWN	Battery voltage

Is the inspection result normal?

YES >> GO TO 2.
NO >> GO TO 3.

2. CHECK FRONT POWER WINDOW SWITCH RH

Check front power window switch RH.
Refer to PWC-35, "Component Inspection".

Is the inspection result normal?

YES >> GO TO 4.
NO >> Replace front power window switch RH. Refer to PWC-65, "Removal and Installation".

3. CHECK FRONT POWER WINDOW SWITCH RH CIRCUIT

1. Turn ignition switch OFF.
2. Disconnect main power window and door lock/unlock switch connector.
3. Check continuity between main power window and door lock/unlock switch harness connector and front power window switch RH harness connector.

Main power window and door lock/unlock switch		Front power window switch RH		Continuity
Connector	Terminal	Connector	Terminal	
D6	16	D112	12	Yes
	2		11	

4. Check continuity between main power window and door lock/unlock switch harness connector and ground.

Main power window and door lock/unlock switch		Ground	Continuity
Connector	Terminal		
D6	16		No
	2		

Is the inspection result normal?

YES >> Replace main power window and door lock/unlock switch. Refer to PWC-64, "Removal and Installation".

NO >> Repair or replace harness.

4. CHECK INTERMITTENT INCIDENT

Refer to GI-41, "Intermittent Incident".

>> Inspection End.

Component Inspection

INFOID:0000000009798785

1. CHECK FRONT POWER WINDOW SWITCH RH

1. Turn ignition OFF.
2. Disconnect front power window switch RH connector.
3. Check front power window switch RH.

Front power window switch RH	Terminal		Front power window switch condition	Continuity
D112	8	7	DOWN	Yes
	11	6		
	11	6	NEUTRAL	
	12	7		
	8	6	UP	
	12	7		

Is the inspection result normal?

YES >> Inspection End.

NO >> Replace front power window switch RH. Refer to PWC-65, "Removal and Installation".

REAR POWER WINDOW SWITCH

Description

INFOID:0000000009798786

Rear power window motor will be operated if rear power window switch is operated.

Component Function Check

INFOID:0000000009798787

1. CHECK REAR POWER WINDOW SWITCH FUNCTION

Check rear power window motor operation with rear power window switch.

Is the inspection result normal?

YES >> Rear power window switch is OK.
NO >> Refer to PWC-36, "Diagnosis Procedure".

Diagnosis Procedure

INFOID:0000000009798788

1. CHECK REAR POWER WINDOW SWITCH INPUT SIGNAL

1. Turn ignition switch OFF.
2. Disconnect rear power window switch connector.
3. Turn ignition switch ON.
4. Check voltage between rear power window switch harness connector and ground.

(+)		(–)	Condition		Voltage (Approx.)
Rear power window switch					
Connector	Terminal				
LH: D204	2	Ground	Power window main switch: LH	UP	Battery voltage
				DOWN	0
	3			UP	0
				DOWN	Battery voltage
RH: D304	2		Power window main switch: RH	UP	Battery voltage
				DOWN	0
	3			UP	0
				DOWN	Battery voltage

Is the inspection result normal?

YES >> GO TO 2.
NO >> GO TO 3.

2. CHECK REAR POWER WINDOW SWITCH

Check rear power window switch.
Refer to PWC-37, "Component Inspection".

Is the inspection result normal?

YES >> GO TO 4.
NO >> Replace rear power window switch. Refer to PWC-65, "Removal and Installation".

3. CHECK REAR POWER WINDOW SWITCH CIRCUIT

1. Turn ignition switch OFF.
2. Disconnect main power window and door lock/unlock switch connector.
3. Check continuity between main power window and door lock/unlock switch harness connector and rear power window switch harness connector.

Main power window and door lock/unlock switch		Rear power window switch			Continuity
Connector	Terminal	Connector		Terminal	
D6	9	LH	D204	2	Yes
	8			3	
	6	RH	D304	3	
	7			2	

4. Check continuity between main power and door lock/unlock switch harness connector and ground.

Main power window and door lock/unlock switch			Continuity
Connector	Terminal		
D6	9	Ground	No
	8		
	6		
	7		

Is the inspection result normal?

YES >> Replace main power window and door lock/unlock switch.Refer to PWC-64, "Removal and Installation".

NO >> Repair or replace harness.

4. CHECK INTERMITTENT INCIDENT

Refer to GI-41, "Intermittent Incident".

>> Inspection End.

Component Inspection

INFOID:0000000009798789

1. CHECK REAR POWER WINDOW SWITCH

1. Turn ignition switch OFF.
2. Disconnect rear power window switch connector.
3. Check rear power window switch terminals under the following conditions.

Terminal		Rear power window switch condition	Continuity
1	5	DOWN	Yes
3	4		
3	4	NEUTRAL	
2	5		
1	4	UP	
2	5		

Is the inspection result normal?

YES >> Inspection End.

NO >> Replace rear power window switch. Refer to PWC-66, "Removal and Installation".

POWER WINDOW MOTOR
DRIVER SIDE

DRIVER SIDE : Description

INFOID:0000000009798790

Door glass moves UP/DOWN by receiving the signal from main power window and door lock/unlock switch.

DRIVER SIDE : Component Function Check

INFOID:0000000009798791

1. CHECK FRONT POWER WINDOW MOTOR LH OPERATION

Check front power window motor LH operation with main power window and door lock/unlock switch.

Is the inspection result normal?

YES >> Front power window motor LH is OK.
NO >> Refer to PWC-38, "DRIVER SIDE : Diagnosis Procedure".

DRIVER SIDE : Diagnosis Procedure

INFOID:0000000009798792

1. CHECK POWER WINDOW MOTOR LH INPUT SIGNAL

1. Turn ignition switch OFF.
2. Disconnect front power window motor LH connector.
3. Turn ignition switch ON.
4. Check voltage between power window motor LH harness connector and ground.

(+)		(–)	Condition		Voltage (Approx.)
Power window motor LH					
Connector	Terminal				
D10	3	Ground	Main power window and door lock/unlock switch	UP	Battery voltage
				DOWN	0
	1			UP	0
				DOWN	Battery voltage

Is the inspection result normal?

YES >> GO TO 3.
NO >> GO TO 2.

2. CHECK POWER WINDOW MOTOR CIRCUIT

1. Turn ignition switch OFF.
2. Disconnect main power window and door lock/unlock switch connector.
3. Check continuity between main power window and door lock/unlock switch harness connector and front power window motor LH harness connector.

Main power window and door lock/unlock switch		Front power window motor LH		Continuity
Connector	Terminal	Connector	Terminal	
D8	17	D10	3	Yes
	19		1	

4. Check continuity between main power window and door lock/unlock switch harness connector and ground.

Main power window and door lock/unlock switch		Ground	Continuity
Connector	Terminal		
D8	17		No
	19		

Is the inspection result normal?

YES >> Replace main power window and door lock/unlock switch.Refer to PWC-64, "Removal and Installation".
NO >> Repair or replace harness.

3. CHECK FRONT POWER WINDOW MOTOR LH

Check front power window motor LH.
Refer to PWC-39, "DRIVER SIDE : Component Inspection".

Is the inspection result normal?

YES >> GO TO 4.
NO >> Replace front power window motor LH. Refer to GW-16, "Removal and Installation".

4. CHECK INTERMITTENT INCIDENT

Refer to GI-41, "Intermittent Incident".

>> Inspection End.

DRIVER SIDE : Component Inspection

INFOID:0000000009798793

1. CHECK FRONT POWER WINDOW MOTOR LH

1. Turn ignition switch OFF.
2. Disconnect front power window motor LH connector.
3. Check motor operate by connecting the battery voltage directly to front power window motor LH connector.

Front power window motor LH connector	Terminal		Motor condition
	(+)	(–)	
D10	1	3	DOWN
	3	1	UP

Is the inspection result normal?

YES >> Inspection End.
NO >> Replace front power window motor LH. Refer to GW-16, "Removal and Installation".

PASSENGER SIDE

PASSENGER SIDE : Description

INFOID:0000000009798794

Door glass moves UP/DOWN by receiving the signal from main power window and door lock/unlock switch or front power window switch (passenger side).

PASSENGER SIDE : Component Function Check

INFOID:0000000009798795

1. CHECK FRONT POWER WINDOW MOTOR RH OPERATION

Check front power window motor RH operation with main power window and door lock/unlock switch or front power window switch RH.

Is the inspection result normal?

YES >> Front power window motor RH is OK.
NO >> Refer to PWC-39, "PASSENGER SIDE : Diagnosis Procedure".

PASSENGER SIDE : Diagnosis Procedure

INFOID:0000000009798796

1. CHECK FRONT POWER WINDOW MOTOR RH INPUT SIGNAL

1. Turn ignition switch OFF.
2. Disconnect front power window motor RH connector.
3. Turn ignition switch ON.
4. Check voltage between front power window motor RH harness connector and ground.

(+)		(–)	Condition		Voltage (Approx.)
Front power window motor RH					
Connector	Terminal				
D105	7	Ground	Front power window switch RH	UP	Battery voltage
				DOWN	0
	6			UP	0
				DOWN	Battery voltage

Is the inspection result normal?

YES >> GO TO 3.
NO >> GO TO 2.

2. CHECK FRONT POWER WINDOW MOTOR RH CIRCUIT

1. Turn ignition switch OFF.
2. Disconnect front power window switch RH connector.
3. Check continuity between front power window switch RH harness connector and front power window motor RH harness connector.

Front power window switch RH		Front power window motor RH		Continuity
Connector	Terminal	Connector	Terminal	
D112	6	D105	3	Yes
	7		1	

4. Check continuity between front power window switch RH harness connector and ground.

Front power window switch RH		Ground	Continuity
Connector	Terminal		
D112	6	Ground	No
	7		

Is the inspection result normal?

YES >> Replace front power window switch RH. Refer to PWC-65, "Removal and Installation".
NO >> Repair or replace harness.

3. CHECK FRONT POWER WINDOW MOTOR RH

Check front power window motor RH.
Refer to PWC-40, "PASSENGER SIDE : Component Inspection".

Is the inspection result normal?

YES >> GO TO 4.
NO >> Replace front power window motor RH. Refer to GW-16, "Removal and Installation".

4. CHECK INTERMITTENT INCIDENT

Refer to GI-41, "Intermittent Incident".

>> Inspection End.

PASSENGER SIDE : Component Inspection

INFOID:0000000009798797

1. CHECK FRONT POWER WINDOW MOTOR RH

1. Turn ignition switch OFF.
2. Disconnect front power window motor RH connector.
3. Check motor operate by connecting the battery voltage directly to front power window motor RH connector.

Front power window motor RH connector	Terminal		Motor condition
	(+)	(–)	
D105	1	3	DOWN
	3	1	UP

Is the inspection result normal?

YES >> Inspection End.
NO >> Replace front power window motor RH. Refer to GW-16, "Removal and Installation".

REAR LH

REAR LH : Description

INFOID:0000000009798798

Door glass moves UP/DOWN by receiving the signal from main power window and door lock/unlock switch or rear power window switch LH.

REAR LH : Component Function Check

INFOID:0000000009798799

1.CHECK REAR POWER WINDOW MOTOR LH OPERATION

Check rear power window motor LH operation with main power window and door lock/unlock switch or rear power window switch LH.

Is the inspection result normal?

YES >> Rear power window motor LH is OK.
NO >> Refer to PWC-41, "REAR LH : Diagnosis Procedure"

REAR LH : Diagnosis Procedure

INFOID:0000000009798800

1.CHECK REAR POWER WINDOW MOTOR LH INPUT SIGNAL

1. Turn ignition switch OFF.
2. Disconnect rear power window motor LH connector.
3. Turn ignition switch ON.
4. Check voltage between rear power window motor LH harness connector and ground.

(+)		(–)	Condition		Voltage (Approx.)
Rear power window motor LH					
Connector	Terminal				
D205	1	Ground	Rear power window switch LH	UP	Battery voltage
				DOWN	0
	3			UP	0
				DOWN	Battery voltage

Is the inspection result normal?

YES >> GO TO 3.
NO >> GO TO 2.

2.CHECK REAR POWER WINDOW MOTOR LH CIRCUIT

1. Turn ignition switch OFF.
2. Disconnect rear power window switch LH connector.
3. Check continuity between rear power window switch LH harness connector and rear power window motor LH harness connector.

Rear power window switch LH		Rear power window motor LH		Continuity
Connector	Terminal	Connector	Terminal	
D204	4	D205	3	Yes
	5		1	

4. Check continuity between rear power window switch LH connector and ground.

Rear power window switch LH		Ground	Continuity
Connector	Terminal		
D204	4		No
	5		

Is the inspection result normal?

YES >> Replace rear power window switch LH.Refer to PWC-65, "Removal and Installation".
NO >> Repair or replace harness.

3. CHECK REAR POWER WINDOW MOTOR LH

Check rear power window motor LH.
Refer to PWC-42, "REAR LH : Component Inspection".

Is the inspection result normal?

YES >> GO TO 4.
NO >> Replace rear power window motor LH. Refer to GW-22, "Removal and Installation".

4. CHECK INTERMITTENT INCIDENT

Refer to GI-41, "Intermittent Incident".

>> Inspection End.

REAR LH : Component Inspection

INFOID:0000000009798801

COMPONENT INSPECTION

1. CHECK REAR POWER WINDOW MOTOR LH

1. Turn ignition switch OFF.
2. Disconnect rear power window motor LH connector.
3. Check motor operation by connecting the battery voltage directly to rear power window motor LH connector.

Rear power window motor LH connector	Terminal		Motor condition
	(+)	(–)	
D205	3	1	DOWN
	1	3	UP

Is the inspection result normal?

YES >> Inspection End.
NO >> Replace rear power window motor LH. Refer to GW-22, "Removal and Installation".

REAR RH

REAR RH : Description

INFOID:0000000009798802

Door glass moves UP/DOWN by receiving the signal from main power window and door lock/unlock switch or rear power window switch RH.

REAR RH : Component Function Check

INFOID:0000000009798803

1. CHECK REAR POWER WINDOW MOTOR RH OPERATION

Check rear power window motor RH operation with main power window and door lock/unlock switch or rear power window switch RH.

Is the inspection result normal?

YES >> Rear power window motor RH is OK.
NO >> Refer to PWC-43, "REAR RH : Diagnosis Procedure".

REAR RH : Diagnosis Procedure

INFOID:0000000009798804

1. CHECK REAR POWER WINDOW MOTOR RH INPUT SIGNAL

1. Turn ignition switch OFF.
2. Disconnect rear power window motor RH connector.
3. Turn ignition switch ON.
4. Check voltage between rear power window motor RH harness connector and ground.

(+)		(–)	Condition		Voltage (Approx.)
Rear power window motor RH					
Connector	Terminal				
D305	1	Ground	Rear power window switch RH	UP	Battery voltage
				DOWN	0
	3			UP	0
				DOWN	Battery voltage

Is the inspection result normal?

YES >> GO TO 3.
NO >> GO TO 2.

2. CHECK REAR POWER WINDOW MOTOR RH CIRCUIT

1. Turn ignition switch OFF.
2. Disconnect rear power window switch RH connector.
3. Check continuity between rear power window switch RH harness connector and rear power window motor RH harness connector.

Rear power window switch RH		Rear power window motor RH		Continuity
Connector	Terminal	Connector	Terminal	
D304	4	D305	3	Yes
	5		1	

4. Check continuity between rear power window switch RH harness connector and ground.

Rear power window switch RH		Ground	Continuity
Connector	Terminal		
D304	4		No
	5		

Is the inspection result normal?

YES >> Replace rear power window switch RH.Refer to PWC-66, "Removal and Installation".
NO >> Repair or replace harness.

3. CHECK REAR POWER WINDOW MOTOR RH

Check rear power window motor RH.
Refer to PWC-44, "REAR RH : Component Inspection".

Is the inspection result normal?

YES >> GO TO 4.
NO >> Replace rear power window motor RH. Refer to GW-22, "Removal and Installation".

4. CHECK INTERMITTENT INCIDENT

Refer to GI-41, "Intermittent Incident".

>> Inspection End.

REAR RH : Component Inspection

INFOID:0000000009798805

COMPONENT INSPECTION

1. CHECK REAR POWER WINDOW MOTOR RH

1. Turn ignition switch OFF.
2. Disconnect rear power window motor RH connector.
3. Check motor operation by connecting the battery voltage directly to rear power window motor RH connector.

Rear power window motor RH connector	Terminal		Motor condition
	(+)	(–)	
D305	3	1	DOWN
	1	3	UP

Is the inspection result normal?

YES >> Inspection End.
NO >> Replace rear power window motor RH. Refer to GW-22, "Removal and Installation".

ENCODER CIRCUIT

Description

INFOID:0000000009798806

Detects condition of the front power window motor LH operation and transmits to main power window and door lock/unlock switch as pulse signal.

Component Function Check

INFOID:0000000009798807

1.CHECK ENCODER OPERATION

Check front driver side door glass perform AUTO open/close operation normally when main power window and door lock/unlock switch.

Is the inspection result normal?

YES >> Encoder operation is OK.
NO >> Refer to PWC-45, "Diagnosis Procedure"

Diagnosis Procedure

INFOID:0000000009798808

Encoder Circuit Check

1.CHECK ENCODER OPERATION

1. Turn ignition switch ON.
2. Check signal between main power window and door lock/unlock switch harness connector and ground with oscilloscope.

(+)		(–)	Signal (Reference value)
Main power window and door lock/unlock switch			
Connector	Terminal		
D6	4	Ground	Refer to following signal
	5		

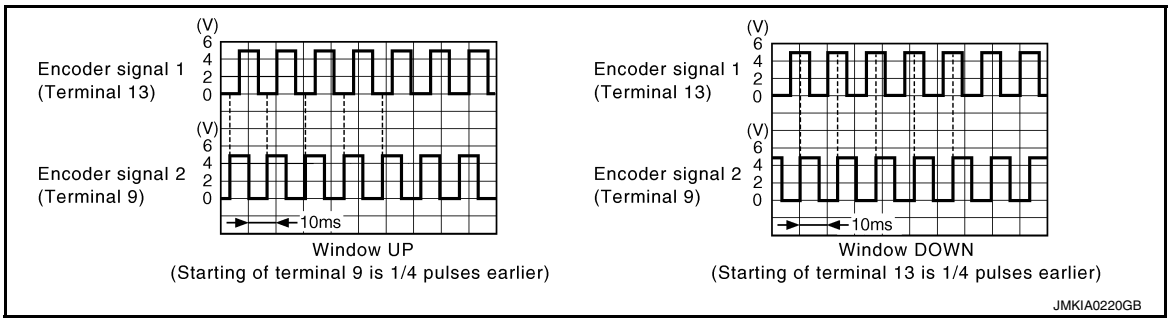

Is the inspection result normal?

YES >> GO TO 7.
NO >> GO TO 2.

2.CHECK ENCORDER SIGNAL CIRCUIT

1. Turn ignition switch OFF.
2. Disconnect main power window and door lock/unlock switch connector and front power window motor LH connector.
3. Check continuity between main power window and door lock/unlock switch harness connector and front power window motor LH harness connector.

Main power window and door lock/unlock switch		Front power window motor LH		Continuity
Connector	Terminal	Connector	Terminal	
D6	4	D10	4	Yes
	5		5	

4. Check continuity between main power window and door lock/unlock switch harness connector and ground.

Main power window and door lock/unlock switch		Ground	Continuity
Connector	Terminal		
D6	4		No
	5		

Is the inspection result normal?

YES >> GO TO 3.
NO >> Repair or replace harness.

3. CHECK ENCORDER POWER SUPPLY CIRCUIT

1. Connect main power window and door lock/unlock switch connector.
2. Turn ignition switch ON.
3. Check voltage between front power window motor LH harness connector and ground.

(+)		(–)	Voltage (Approx.)
Front power window motor LH			
Connector	Terminal		
D10	2	Ground	Battery voltage

Is the inspection result normal?

YES >> GO TO 4.
NO >> GO TO 5.

4. CHECK GROUND CIRCUIT

1. Turn ignition switch OFF.
2. Check continuity between front power window motor LH harness connector and ground.

Front power window motor LH		Ground	Continuity
Connector	Terminal		
D10	6		Yes

Is the inspection result normal?

YES >> GO TO 7.
NO >> GO TO 6.

5. CHECK HARNESS CONTINUITY 1

1. Turn ignition switch OFF.
2. Check continuity between main power window and door lock/unlock switch harness connector and front power window motor LH harness connector.

Main power window and door lock/unlock switch		Front power window motor LH		Continuity
Connector	Terminal	Connector	Terminal	
D6	12	D10	6	Yes

3. Check continuity between main power window and door lock/unlock switch harness connector and ground.

Main power window and door lock/unlock switch		Ground	Continuity
Connector	Terminal		
D6	12		No

Is the inspection result normal?

YES >> Replace main power window and door lock/unlock switch. Refer to PWC-65, "Removal and Installation".
NO >> Repair or replace harness.

6. CHECK HARNESS CONTINUITY 2

1. Disconnect main power window and door lock/unlock switch connector.
2. Check continuity between main power window and door lock/unlock switch harness connector and front power window motor LH harness connector.

Main power window and door lock/unlock switch		Front power window motor LH		Continuity
Connector	Terminal	Connector	Terminal	
D6	14	D10	2	Yes

Is the inspection result normal?

YES >> Replace main power window and door lock/unlock switch. Refer to PWC-65, "Removal and Installation".

NO >> Repair or replace harness.

7. CHECK INTERMITTENT INCIDENT

Refer to GI-41, "Intermittent Incident".

>> Inspection End.

POWER WINDOW RELAY

Description

INFOID:0000000010288636

Power is supplied to the main power window and door lock/unlock with BCM control.

Component Function Check

INFOID:0000000010288637

1. CHECK POWER WINDOW RELAY POWER SUPPLY CIRCUIT

Check that an operation noise of power window relay [located behind the A/C switch assembly (automatic A/C) or Front air control (manual A/C)] can be heard when turning the main power window and door lock/unlock switch ON.

Is the inspection result normal?

YES >> Power window relay power supply circuit is OK.
NO >> Refer to PWC-48, "Diagnosis Procedure".

Diagnosis Procedure

INFOID:0000000010288638

Regarding Wiring Diagram information, refer to PWC-17, "Wiring Diagram".

1. CHECK POWER WINDOW RELAY CONTROL CIRCUIT

1. Disconnect BCM connector.
2. Turn ignition switch ON.
3. Check voltage between BCM connector and ground.

(+)		(–)	Voltage (Approx.)
Connector	Terminal	Ground	Battery voltage
M18	23		

Is the inspection result normal?

YES >> Replace the BCM. Refer to BCS-75, "Removal and Installation" (with Intelligent Key system) or BCS-135, "Removal and Installation" (without Intelligent Key system).
NO >> GO TO 2.

2. CHECK HARNESS CONTINUITY

1. Turn ignition switch OFF.
2. Disconnect BCM and power window relay.
3. Check continuity between BCM connector and power window relay connector.

BCM		Power window relay		Continuity
Connector	Terminal	Connector	Terminal	
M18	23	M58	1	Yes

Is the inspection result normal?

YES >> GO TO 3.
NO >> Repair or replace harness.

3. CHECK POWER WINDOW RELAY

Check power window relay.
Refer to PWC-49, "Component Inspection".

Is the inspection result normal?

YES >> Check intermittent incident. Refer to GI-41, "Intermittent Incident".
NO >> Replace power window relay.

Component Inspection

INFOID:0000000010288639

1. CHECK POWER WINDOW RELAY

Check power window relay.

Terminal		Condition	Continuity
Power window relay			
3	5	12V direct current supply between terminals 1 and 2.	Yes
		No current supply	No

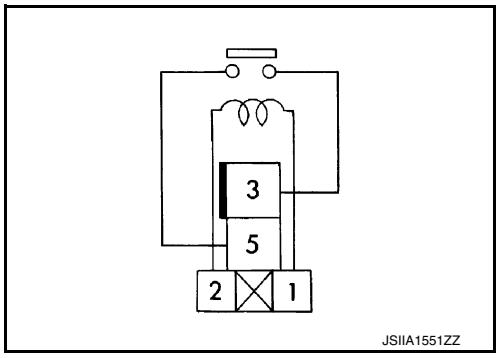

Is the inspection result normal?

YES >> Inspection End.
NO >> Replace power window relay.

DOOR SWITCH
WITH INTELLIGENT KEY

WITH INTELLIGENT KEY : Component Function Check

INFOID:0000000010310167

1.CHECK FUNCTION

1. Select "DOOR LOCK" of "BCM" using CONSULT.
2. Select "DOOR SW-DR", "DOOR SW-AS", "DOOR SW-RL", "DOOR SW-RR", in "Data Monitor" mode.
3. Check that the function operates normally according to the following conditions.

Monitor item	Condition		Status
DOOR SW-DR	Driver side door	Open	On
		Closed	Off
DOOR SW-AS	Passenger side door	Open	On
		Closed	Off
DOOR SW-RL	Rear door LH	Open	On
		Closed	Off
DOOR SW-RR	Rear door RH	Open	On
		Closed	Off

Is the inspection result normal?

YES >> Door switch is OK.
NO >> Refer to PWC-50, "WITH INTELLIGENT KEY : Diagnosis Procedure".

WITH INTELLIGENT KEY : Diagnosis Procedure

INFOID:0000000010310168

Regarding Wiring Diagram information, refer to DLK-69, "Wiring Diagram".

1.CHECK DOOR SWITCH INPUT SIGNAL

1. Turn ignition switch OFF.
2. Disconnect malfunctioning door switch connector.
3. Check signal between malfunctioning door switch harness connector and ground using oscilloscope.

(+)			(–)	Signal (Reference value)
Door switch				
Connector		Terminal		
Driver side	B71	3	Ground	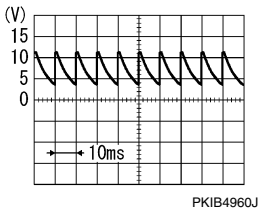 7.0 - 8.0 V
Passenger side	B141			
Rear LH	B70			
Rear RH	B142			

Is the inspection result normal?

YES >> GO TO 3.
NO >> GO TO 2.

2.CHECK DOOR SWITCH CIRCUIT

1. Disconnect BCM connector.
2. Check continuity between door switch harness connector and BCM harness connector.

Door switch			BCM		Continuity
Connector		Terminal	Connector	Terminal	
Front LH	B71	3	B16	57	Yes
Front RH	B141			53	
Rear LH	B70			52	
Rear RH	B142			50	

3. Check continuity between door switch harness connector and ground.

Door switch			Ground	Continuity
Connector		Terminal		
Front LH	B71	3		No
Front RH	B141			
Rear LH	B70			
Rear RH	B142			

Is the inspection result normal?

YES >> Replace BCM. Refer to BCS-75, "Removal and Installation".
NO >> Repair or replace harness.

3.CHECK DOOR SWITCH

Refer to PWC-51, "WITH INTELLIGENT KEY : Component Inspection".

Is the inspection result normal?

YES >> GO TO 4.
NO >> Replace malfunctioning door switch. Refer to DLK-269, "Removal and Installation".

4.CHECK INTERMITTENT INCIDENT

Refer to GI-41, "Intermittent Incident".

>> Inspection End.

WITH INTELLIGENT KEY : Component Inspection

INFOID:0000000010310169

1.CHECK DOOR SWITCH

1. Turn ignition switch OFF.
2. Disconnect malfunctioning door switch connector.
3. Check continuity between door switch terminals.

Door switch		Condition		Continuity
Terminal				
3	Ground contact is part of the switch.	Door switch	Pressed	No
			Released	Yes

Is the inspection result normal?

YES >> Inspection End.
NO >> Replace malfunctioning door switch. Refer to DLK-269, "Removal and Installation".

WITHOUT INTELLIGENT KEY

WITHOUT INTELLIGENT KEY : Description

INFOID:0000000010310170

Detects door open/close condition.

WITHOUT INTELLIGENT KEY : Component Function Check

INFOID:0000000010310171

1.CHECK FUNCTION

1. Select "DOOR LOCK" of BCM using CONSULT.
2. Select "DOOR SW-DR", "DOOR SW-AS", "DOOR SW-RL", "DOOR SW-RR", in Data Monitor mode.
3. Check that the function operates normally according to the following conditions.

Monitor item	Condition		Status
DOOR SW-DR	Driver side door	Open	On
		Closed	Off
DOOR SW-AS	Passenger side door	Open	On
		Closed	Off
DOOR SW-RL	Rear door LH	Open	On
		Closed	Off
DOOR SW-RR	Rear door RH	Open	On
		Closed	Off

Is the inspection result normal?

YES >> Door switch is OK.
NO >> Refer to DLK-319, "Diagnosis Procedure".

WITHOUT INTELLIGENT KEY : Diagnosis Procedure

INFOID:0000000010310172

Regarding Wiring Diagram information, refer to DLK-293, "Wiring Diagram".

1. CHECK DOOR SWITCH INPUT SIGNAL

1. Turn ignition switch OFF.
2. Disconnect malfunctioning door switch connector.
3. Check signal between malfunctioning door switch harness connector and ground using oscilloscope.

(+)			(–)	Signal (Reference value)
Door switch				
Connector		Terminal		
Front LH	B71	3	Ground	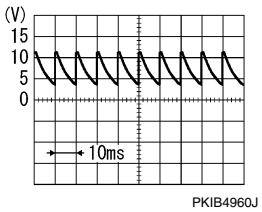 7.0 - 8.0 V
Front RH	B141			
Rear LH	B70			
Rear RH	B142			

Is the inspection result normal?

YES >> GO TO 3.
NO >> GO TO 2.

2. CHECK DOOR SWITCH CIRCUIT

1. Disconnect BCM connector.
2. Check continuity between door switch harness connector and BCM harness connector.

Door switch			BCM		Continuity
Connector		Terminal	Connector	Terminal	
Front LH	B71	3	B16	57	Yes
Front RH	B141			53	
Rear LH	B70			52	
Rear RH	B142			50	

3. Check continuity between door switch harness connector and ground.

Door switch			Ground	Continuity
Connector		Terminal		
Front LH	B71	3		No
Front RH	B141			
Rear LH	B70			
Rear RH	B142			

Is the inspection result normal?

YES >> Replace BCM. Refer to BCS-135, "Removal and Installation".
NO >> Repair or replace harness.

3.CHECK DOOR SWITCH

Refer to DLK-150, "Component Inspection".

Is the inspection result normal?

YES >> GO TO 4.
NO >> Replace malfunctioning door switch. Refer to DLK-385, "Removal and Installation".

4.CHECK INTERMITTENT INCIDENT

Refer to GI-41, "Intermittent Incident".

>> Inspection End.

WITHOUT INTELLIGENT KEY : Component Inspection

INFOID:0000000010310173

1.CHECK DOOR SWITCH

1. Turn ignition switch OFF.
2. Disconnect door switch connector.
3. Check door switch.

Terminal		Door switch condition	Continuity
Door switch			
3	Ground part of door switch	Pressed	No
		Released	Yes

Is the inspection result normal?

YES >> Inspection End.
NO >> Replace malfunctioning door switch. Refer to DLK-385, "Removal and Installation".

SYMPTOM DIAGNOSIS

POWER WINDOW CONTROL SYSTEM SYMPTOMS

Symptom Table

INFOID:0000000010223693

Symptom	Reference page
None of the power windows can be operated using any switch.	Refer to PWC-55, "Diagnosis Procedure".
Driver side power window alone does not operate.	Refer to PWC-56, "Diagnosis Procedure".
Front passenger side power window does not operate (with both power window main switch and front passenger side power window switch).	Refer to PWC-57, "WITH BOTH POWER WINDOW MAIN SWITCH AND FRONT PASSENGER SIDE POWER WINDOW SWITCH : Diagnosis Procedure".
Front passenger side power window does not operate (with front power window switch only).	Refer to PWC-57, "WITH FRONT POWER WINDOW SWITCH ONLY : Diagnosis Procedure".
Rear LH side power window does not operate (with both power window main switch and rear power window switch LH).	Refer to PWC-58, "WITH BOTH POWER WINDOW MAIN SWITCH AND REAR POWER WINDOW SWITCH LH : Diagnosis Procedure".
Rear LH side power window does not operate (with rear power window switch LH only).	Refer to PWC-58, "WITH REAR POWER WINDOW SWITCH LH ONLY : Diagnosis Procedure".
Rear RH side power window does not operate (with both power window main switch and rear power window switch RH).	Refer to PWC-59, "WITH BOTH POWER WINDOW MAIN SWITCH AND REAR POWER WINDOW SWITCH RH : Diagnosis Procedure".
Rear RH side power window does not operate (with rear power window switch RH only).	Refer to PWC-59, "WITH REAR POWER WINDOW SWITCH RH ONLY : Diagnosis Procedure".
Anti-pinch system does not operate normally (drivers side).	Refer to PWC-60, "Diagnosis Procedure".
Power window retained power operation does not operate properly.	Refer to PWC-61, "Diagnosis Procedure".
Auto operation does not operate manual operate normally (driver side).	Refer to PWC-62, "Diagnosis Procedure".
Power window lock switch does not function.	Refer to PWC-63, "Diagnosis Procedure".

NONE OF THE POWER WINDOWS CAN BE OPERATED USING ANY SWITCH

Diagnosis Procedure

INFOID:0000000009798817

1. CHECK BCM POWER SUPPLY AND GROUND CIRCUIT

Check BCM power supply and ground circuit.
Refer to BCS-68, "Diagnosis Procedure" (with Intelligent Key system) or BCS-128, "Diagnosis Procedure" (without Intelligent Key system).

Is the inspection result normal?

YES >> GO TO 2.
NO >> Repair or replace the malfunctioning parts.

2. CHECK MAIN POWER WINDOW AND DOOR LOCK/UNLOCK SWITCH POWER SUPPLY AND GROUND CIRCUIT

Check main power window and door lock/unlock switch power supply and ground circuit.
Refer to PWC-30, "POWER WINDOW MAIN SWITCH : Diagnosis Procedure".

Is the inspection result normal?

YES >> GO TO 3.
NO >> Repair or replace the malfunctioning parts.

3. CONFIRM THE OPERATION

Confirm the operation again.

Is the result normal?

YES >> Check intermittent incident. Refer to GI-41, "Intermittent Incident".
NO >> GO TO 1.

DRIVER SIDE POWER WINDOW DOES NOT OPERATE

Diagnosis Procedure

INFOID:0000000009798818

1. CHECK FRONT POWER WINDOW MOTOR LH

Check power window motor.
Refer to PWC-38, "DRIVER SIDE : Component Function Check".

Is the inspection result normal?

YES >> GO TO 2.
NO >> Repair or replace the malfunctioning parts.

2. CONFIRM THE OPERATION

Confirm the operation again.

Is the result normal?

YES >> Check intermittent incident. Refer to GI-41, "Intermittent Incident".
NO >> GO TO 1.

FRONT PASSENGER SIDE POWER WINDOW DOES NOT OPERATE WITH BOTH POWER WINDOW MAIN SWITCH AND FRONT PASSENGER SIDE POWER WINDOW SWITCH

WITH BOTH POWER WINDOW MAIN SWITCH AND FRONT PASSENGER SIDE POWER WINDOW SWITCH : Diagnosis Procedure

INFOID:0000000009798819

1. CHECK FRONT POWER WINDOW SWITCH RH

Check front power window switch RH.
Refer to PWC-34, "Component Function Check".

Is the inspection result normal?

YES >> GO TO 2.
NO >> Repair or replace the malfunctioning parts

2. CHECK FRONT POWER WINDOW MOTOR RH

Check front power window motor RH.
Refer to PWC-39, "PASSENGER SIDE : Component Function Check".

Is the inspection result normal?

YES >> GO TO 3.
NO >> Repair or replace the malfunctioning parts.

3. CONFIRM THE OPERATION

Confirm the operation again.

Is the result normal?

YES >> Check intermittent incident. Refer to GI-41, "Intermittent Incident".
NO >> GO TO 1.

WITH FRONT POWER WINDOW SWITCH ONLY

WITH FRONT POWER WINDOW SWITCH ONLY : Diagnosis Procedure

INFOID:0000000009798820

1. CHECK FRONT POWER WINDOW SWITCH RH POWER SUPPLY AND GROUND CIRCUIT

Check front power window switch RH power supply and ground circuit.
Refer to PWC-31, "FRONT POWER WINDOW SWITCH (PASSENGER SIDE) : Diagnosis Procedure".

Is the inspection result normal?

YES >> GO TO 2.
NO >> Repair or replace the malfunctioning parts.

2. CHECK FRONT POWER WINDOW SWITCH RH

Check front power window switch RH.
Refer to PWC-34, "Component Function Check".

Is the inspection result normal?

YES >> GO TO 3.
NO >> Repair or replace the malfunctioning parts

3. CONFIRM THE OPERATION

Confirm the operation again.

Is the result normal?

YES >> Check intermittent incident. Refer to GI-41, "Intermittent Incident".
NO >> GO TO 1.

REAR LH SIDE POWER WINDOW DOES NOT OPERATE

WITH BOTH POWER WINDOW MAIN SWITCH AND REAR POWER WINDOW SWITCH LH

WITH BOTH POWER WINDOW MAIN SWITCH AND REAR POWER WINDOW SWITCH LH : Diagnosis Procedure

INFOID:0000000009798821

1. CHECK REAR POWER WINDOW SWITCH

Check rear power window switch.
Refer to PWC-36, "Component Function Check".

Is the inspection result normal?

YES >> GO TO 2.
NO >> Repair or replace the malfunctioning parts.

2. CHECK REAR POWER WINDOW MOTOR LH

Check rear power window motor LH.
Refer to PWC-41, "REAR LH : Component Function Check".

Is the inspection result normal?

YES >> GO TO 3.
NO >> Repair or replace the malfunctioning parts.

3. CONFIRM THE OPERATION

Confirm the operation again.

Is the result normal?

YES >> Check intermittent incident. Refer to GI-41, "Intermittent Incident".
NO >> GO TO 1.

WITH REAR POWER WINDOW SWITCH LH ONLY

WITH REAR POWER WINDOW SWITCH LH ONLY : Diagnosis Procedure

INFOID:0000000009798822

1. CHECK REAR POWER WINDOW SWITCH POWER SUPPLY AND GROUND CIRCUIT

Check rear power window switch power supply and ground circuit.
Refer to PWC-32, "REAR POWER WINDOW SWITCH : Diagnosis Procedure".

Is the inspection result normal?

YES >> GO TO 2.
NO >> Repair or replace the malfunctioning parts.

2. CHECK REAR POWER WINDOW SWITCH

Check rear power window switch.
Refer to PWC-36, "Component Function Check".

Is the inspection result normal?

YES >> GO TO 3.
NO >> Repair or replace the malfunctioning parts.

3. CONFIRM THE OPERATION

Confirm the operation again.

Is the result normal?

YES >> Check intermittent incident. Refer to GI-41, "Intermittent Incident".
NO >> GO TO 1.

REAR RH SIDE POWER WINDOW DOES NOT OPERATE

WITH BOTH POWER WINDOW MAIN SWITCH AND REAR POWER WINDOW SWITCH RH

WITH BOTH POWER WINDOW MAIN SWITCH AND REAR POWER WINDOW SWITCH RH : Diagnosis Procedure

INFOID:0000000009798823

1. CHECK REAR POWER WINDOW SWITCH

Check rear power window switch.
Refer to PWC-36, "Component Function Check".

Is the inspection result normal?

YES >> GO TO 2.
NO >> Repair or replace the malfunctioning parts.

2. CHECK REAR POWER WINDOW MOTOR RH

Check rear power window motor RH.
Refer to PWC-42, "REAR RH : Component Function Check".

Is the inspection result normal?

YES >> GO TO 3.
NO >> Repair or replace the malfunctioning parts.

3. CONFIRM THE OPERATION

Confirm the operation again.

Is the result normal?

YES >> Check intermittent incident. Refer to GI-41, "Intermittent Incident".
NO >> GO TO 1.

WITH REAR POWER WINDOW SWITCH RH ONLY

WITH REAR POWER WINDOW SWITCH RH ONLY : Diagnosis Procedure

INFOID:0000000009798824

1. CHECK REAR POWER WINDOW SWITCH POWER SUPPLY AND GROUND CIRCUIT

Check rear power window switch power supply and ground circuit.
Refer to PWC-32, "REAR POWER WINDOW SWITCH : Diagnosis Procedure".

Is the inspection result normal?

YES >> GO TO 2.
NO >> Repair or replace the malfunctioning parts.

2. CHECK REAR POWER WINDOW SWITCH

Check rear power window switch.
Refer to PWC-36, "Component Function Check".

Is the inspection result normal?

YES >> GO TO 3.
NO >> Repair or replace the malfunctioning parts.

3. CONFIRM THE OPERATION

Confirm the operation again.

Is the result normal?

YES >> Check intermittent incident. Refer to GI-41, "Intermittent Incident".
NO >> GO TO 1.

ANTI-PINCH SYSTEM DOES NOT OPERATE NORMALLY (DRIVER SIDE)

Diagnosis Procedure

INFOID:0000000009798825

1. PERFORM INITIALIZATION PROCEDURE

Initialization procedure is executed and operation is confirmed.
Refer to PWC-27, "ADDITIONAL SERVICE WHEN REMOVING BATTERY NEGATIVE TERMINAL : Special Repair Requirement".

Is the inspection result normal?

YES >> Inspection End.
NO >> GO TO 2.

2. CHECK ENCODER CIRCUIT

Check encoder circuit.
Refer to PWC-45, "Component Function Check".

Is the inspection result normal?

YES >> GO TO 3.
NO >> Repair or replace the malfunctioning parts.

3. CONFIRM THE OPERATION

Confirm the operation again.

Is the result normal?

YES >> Check intermittent incident. Refer to GI-41, "Intermittent Incident".
NO >> GO TO 1.

POWER WINDOW RETAINED POWER OPERATION DOES NOT OPERATE PROPERLY

Diagnosis Procedure

INFOID:0000000009798826

1. CHECK DOOR SWITCH

Check door switch.
Refer to DLK-149, "Component Function Check" (with Intelligent Key system) or DLK-319, "Component Function Check" (without Intelligent Key system).

Is the inspection result normal?

YES >> GO TO 2.
NO >> Repair or replace the malfunctioning parts.

2. CONFIRM THE OPERATION

Confirm the operation again.

Is the result normal?

YES >> Check intermittent incident. Refer to GI-41, "Intermittent Incident".
NO >> GO TO 1.

AUTO OPERATION DOES NOT OPERATE BUT MANUAL OPERATE NORMALLY (DRIVER SIDE)

Diagnosis Procedure

INFOID:0000000009798827

1. PERFORM INITIALIZATION PROCEDURE

Initialization procedure is executed and operation is confirmed.
Refer to PWC-27, "ADDITIONAL SERVICE WHEN REMOVING BATTERY NEGATIVE TERMINAL : Special Repair Requirement".

Is the inspection result normal?

YES >> Inspection End.
NO >> GO TO 2.

2. CHECK ENCODER

Check encoder.
Refer to PWC-45, "Component Function Check".

Is the inspection result normal?

YES >> GO TO 3.
NO >> Repair or replace the malfunctioning parts.

3. CONFIRM THE OPERATION

Confirm the operation again.

Is the result normal?

YES >> Check intermittent incident. Refer to GI-41, "Intermittent Incident".
NO >> GO TO 1.

POWER WINDOW LOCK SWITCH DOES NOT FUNCTION

Diagnosis Procedure

INFOID:0000000009798828

1. REPLACE MAIN POWER WINDOW AND DOOR LOCK/UNLOCK SWITCH

Replace main power window and door lock/unlock switch.

>> Refer to PWC-65, "Removal and Installation".

REMOVAL AND INSTALLATION

MAIN POWER WINDOW AND DOOR LOCK/UNLOCK SWITCH

Removal and Installation

INFOID:0000000010331185

REMOVAL

1. Remove the front door pull handle bracket (LH). Refer to INT-15, "Removal and Installation".
2. Release pawls using a suitable tool (A) and remove main power window and door lock/unlock switch finisher (1).
   ◌: Pawl

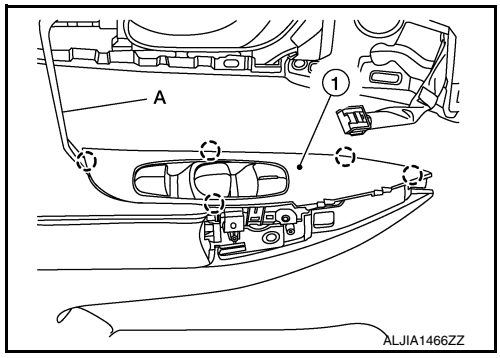

3. Disconnect the harness connectors from the main power window and door lock/unlock switch.
4. Release the pawls, then separate the main power window and door lock/unlock switch (1) from the switch finisher (2).
   ◌: Pawl

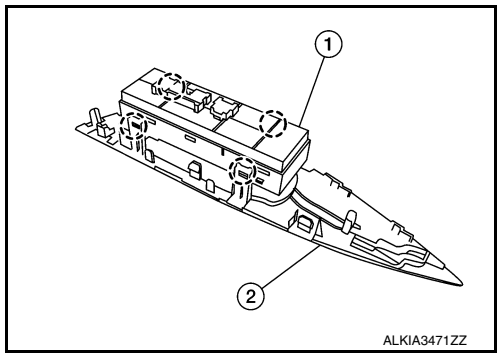

INSTALLATION

Installation is in the reverse order of removal.

NOTE:

When the main power window and door lock/unlock switch is removed or replaced, it is necessary to perform the initialization procedure. Refer to PWC-25, "Work Flow".

POWER WINDOW AND DOOR LOCK/UNLOCK SWITCH RH

Removal and Installation

INFOID:0000000010331186

REMOVAL

1. Remove the front door pull handle bracket (RH). Refer to INT-15, "Removal and Installation".
2. Release pawls using a suitable tool (A) and remove front door power window and door lock/unlock switch finisher (RH) (1).
   ◌: Pawl

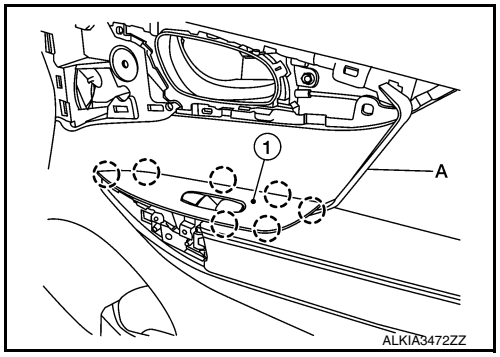

3. Disconnect the harness connector from the front door power window and door lock/unlock switch (RH).
4. Release pawls, then separate front power window and door lock/unlock switch (RH) (1) from switch finisher (2).
   ◌: Pawl

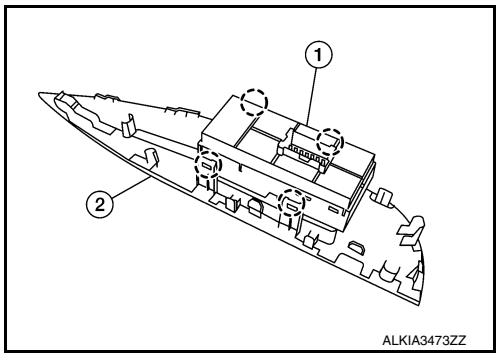

INSTALLATION

Installation is in the reverse order of removal.

NOTE:

When the front power window and door lock/unlock switch (RH) is removed or replaced, it is necessary to perform the initialization procedure. Refer to PWC-25, "Work Flow".

REAR POWER WINDOW SWITCH

Removal and Installation

INFOID:0000000010331187

REMOVAL

1. Remove screw cover (1).

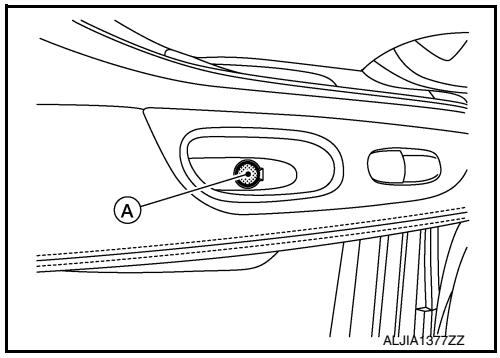

2. Remove screw (A).

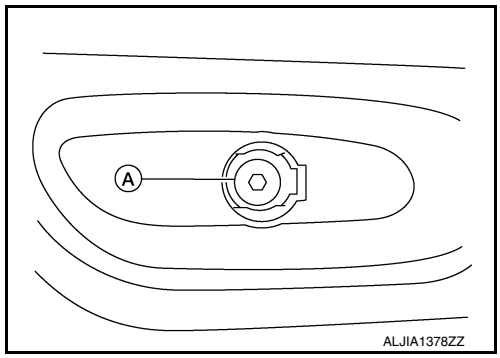

3. Release pawls using a suitable tool (A) and remove rear power window switch finisher (1).
   ◌: Pawl

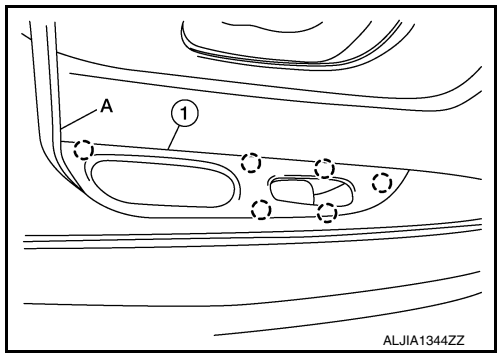

4. Disconnect harness connector from rear power window switch.
5. Release the pawls, then separate the rear power window switch (1) from the switch finisher (2).
   ◌: Pawl

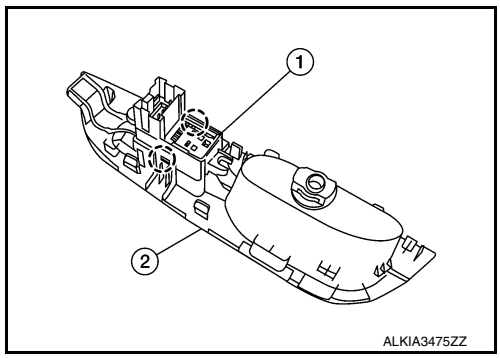

INSTALLATION

Installation is in the reverse order of removal.