SECTION HA

HEATER & AIR CONDITIONING SYSTEM

CONTENTS

PRECAUTION

PRECAUTIONS

Precaution for Supplemental Restraint System (SRS) "AIR BAG" and "SEAT BELT PRE-TENSIONER"

INFOID:0000000011279465

The Supplemental Restraint System such as “AIR BAG” and “SEAT BELT PRE-TENSIONER”, used along with a front seat belt, helps to reduce the risk or severity of injury to the driver and front passenger for certain types of collision. Information necessary to service the system safely is included in the SR and SB section of this Service Manual.

WARNING:

- **To avoid rendering the SRS inoperative, which could increase the risk of personal injury or death in the event of a collision which would result in air bag inflation, all maintenance must be performed by an authorized NISSAN/INFINITI dealer.**
- **Improper maintenance, including incorrect removal and installation of the SRS, can lead to personal injury caused by unintentional activation of the system. For removal of Spiral Cable and Air Bag Module, see the SR section.**
- **Do not use electrical test equipment on any circuit related to the SRS unless instructed to in this Service Manual. SRS wiring harnesses can be identified by yellow and/or orange harnesses or harness connectors.**

PRECAUTIONS WHEN USING POWER TOOLS (AIR OR ELECTRIC) AND HAMMERS

WARNING:

- **When working near the Airbag Diagnosis Sensor Unit or other Airbag System sensors with the Ignition ON or engine running, DO NOT use air or electric power tools or strike near the sensor(s) with a hammer. Heavy vibration could activate the sensor(s) and deploy the air bag(s), possibly causing serious injury.**
- **When using air or electric power tools or hammers, always switch the Ignition OFF, disconnect the battery and wait at least three minutes before performing any service.**

Precaution for Work

INFOID:0000000011279466

- When removing or disassembling each component, be careful not to damage or deform it. If a component may be subject to interference, be sure to protect it with a shop cloth.
- When removing (disengaging) components with a screwdriver or similar tool, be sure to wrap the component with a shop cloth or vinyl tape to protect it.
- Protect the removed parts with a shop cloth and prevent them from being dropped.
- Replace a deformed or damaged clip.
- If a part is specified as a non-reusable part, always replace it with a new one.
- Be sure to tighten bolts and nuts securely to the specified torque.
- After installation is complete, be sure to check that each part works properly.
- Follow the steps below to clean components:

- Water soluble dirt:
- Dip a soft cloth into lukewarm water, wring the water out of the cloth and wipe the dirty area.
- Then rub with a soft, dry cloth.

- Oily dirt:
- Dip a soft cloth into lukewarm water with mild detergent (concentration: within 2 to 3%) and wipe the dirty area.
- Then dip a cloth into fresh water, wring the water out of the cloth and wipe the detergent off.
- Then rub with a soft, dry cloth.

- Do not use organic solvent such as thinner, benzene, alcohol or gasoline.
- For genuine leather seats, use a genuine leather seat cleaner.

Procedure without Cowl Top Cover

INFOID:0000000011279467

When performing the procedure after removing cowl top cover, cover the lower end of windshield with urethane, etc. to prevent damage to the windshield.

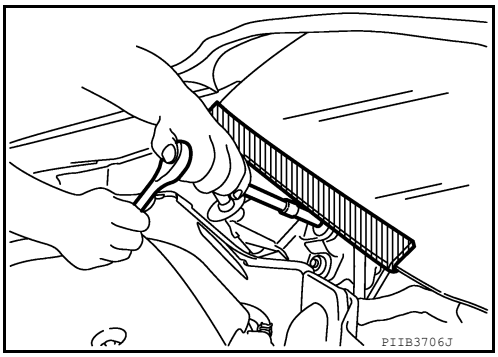

Precautions For Refrigerant System Service

INFOID:0000000011279468

GENERAL REFRIGERANT PRECAUTION

WARNING:

- **Do not breathe A/C refrigerant and oil vapor or mist. Exposure may irritate eyes, nose and throat. Remove HFC-134a (R-134a) from the A/C system, using certified service equipment meeting requirements of SAE J-2210 [HFC-134a (R-134a) recycling equipment] or J-2209 [HFC-134a (R-134a) recovery equipment]. Ventilate work area before resuming service if accidental system discharge occurs. Additional health and safety information may be obtained from refrigerant and oil manufacturers.**
- **Do not release refrigerant into the air. Use approved recovery/recycling recharging equipment to capture the refrigerant each time an air conditioning system is discharged.**
- **Always wear eye and hand protection (goggles and gloves) when working with any refrigerant or air conditioning system.**
- **Do not store or heat refrigerant containers above 52°C (126°F).**
- **Do not heat a refrigerant container with an open flame; Place the bottom of the container in a warm pail of water if container warming is required.**
- **Do not intentionally drop, puncture or incinerate refrigerant containers.**
- **Do not refrigerant away from open flames; poisonous gas is produced if refrigerant burns.**
- **Refrigerant displaces oxygen; therefore be certain to work in well ventilated areas to prevent suffocation.**
- **Do not pressure test or leak test HFC-134a (R-134a) service equipment and/or vehicle air conditioning systems with compressed air during repair. Some mixtures of air and HFC-134a (R-134a) have been shown to be combustible at elevated pressures. These mixtures, if ignited, may cause injury or property damage. Additional health and safety information may be obtained from refrigerant manufacturers.**

WORKING WITH HFC-134a (R-134a)

CAUTION:

- **CFC-12 (R-12) refrigerant and HFC-134a (R-134a) refrigerant are not compatible. Compressor malfunction is likely to occur if the refrigerants are mixed, refer to “CONTAMINATED REFRIGERANT” below. To determine the purity of HFC-134a (R-134a) in the vehicle and recovery tank, use Refrigerant recovery/recycling recharging equipment and Refrigerant Identifier.**
- **Use only specified oil for the HFC-134a (R-134a) A/C system and HFC-134a (R-134a) components. Compressor malfunction is likely to occur if oil other than that specified is used.**
- **The specified HFC-134a (R-134a) oil rapidly absorbs moisture from the atmosphere. The following handling precautions must be observed:**
- **Cap (seal) the component immediately to minimize the entry of moisture from the atmosphere when removing refrigerant components from a vehicle.**
- **Do not remove the caps (unseal) until just before connecting the components when installing refrigerant components to a vehicle. Connect all refrigerant loop components as quickly as possible to minimize the entry of moisture into system.**
- **Use only the specified oil from a sealed container. Reseal containers of oil immediately. Oil becomes moisture saturated and should not be used without proper sealing.**
- **Do not allow oil to come in contact with styrene foam parts. Damage may result.**

CONTAMINATED REFRIGERANT

Take appropriate steps shown below if a refrigerant other than pure HFC-134a (R-134a) is identified in a vehicle:

- Explain to the customer that environmental regulations prohibit the release of contaminated refrigerant into the atmosphere.
- Explain that recovery of the contaminated refrigerant could damage service equipment and refrigerant supply.
- Suggest the customer return the vehicle to the location of previous service where the contamination may have occurred.
- In case of repairing, recover the refrigerant using only **dedicated equipment and containers. Do not recover contaminated refrigerant into the existing service equipment.** Contact a local refrigerant product retailer for available service if the facility does not have dedicated recovery equipment. This refrigerant must be disposed of in accordance with all federal and local regulations. In addition, replacement of all refrigerant system components on the vehicle is recommended.
- The air conditioner warranty is void if the vehicle is within the warranty period. Please contact NISSAN Customer Affairs for further assistance.

REFRIGERANT CONNECTION

A new type of refrigerant connection has been introduced to all refrigerant lines except the following locations:

- Expansion valve to evaporator
- Refrigerant pressure sensor to liquid tank

WARNING:

Check that all refrigerant is discharged into the recycling equipment and the pressure in the system is less than atmospheric pressure. Then gradually loosen the discharge side hose fitting and remove it.

CAUTION:

Observe the following when replacing or cleaning refrigerant components.

- **When the compressor is removed, store it in the same way as it is when mounted on the vehicle. Failure to do so will cause oil to enter the low-pressure chamber.**
- **Always use a torque wrench and a back-up wrench when connecting tubes.**
- **Plug immediately all openings to prevent entry of dust and moisture after disconnecting tubes.**
- **Connect the pipes at the final stage of the operation when installing an air conditioner in the vehicle. Do not remove the seal caps of pipes and other components until just before required for connection.**
- **Allow components stored in cool areas to warm to working area temperature before removing seal caps. This prevents condensation from forming inside A/C components.**
- **Remove moisture thoroughly from the refrigeration system before charging the refrigerant.**
- **Always replace used O-rings.**
- **Apply oil to the O-rings shown in illustrations when connecting tubes. Be careful not to apply oil to threaded portion.**
- **O-ring must be closely attached to the groove portion of tube.**
- **Be careful not to damage O-ring and tube when replacing the O-ring.**
- **Connect tube until a click can be heard. Then tighten the nut or bolt by hand. Check that the O-ring is installed to tube correctly.**

- **Perform leak test and make sure that there are no leaks from connections after connecting line. Disconnect that line and replace the O-ring when the refrigerant leaking point is found. Then tighten connections of seal seat to the specified torque.**

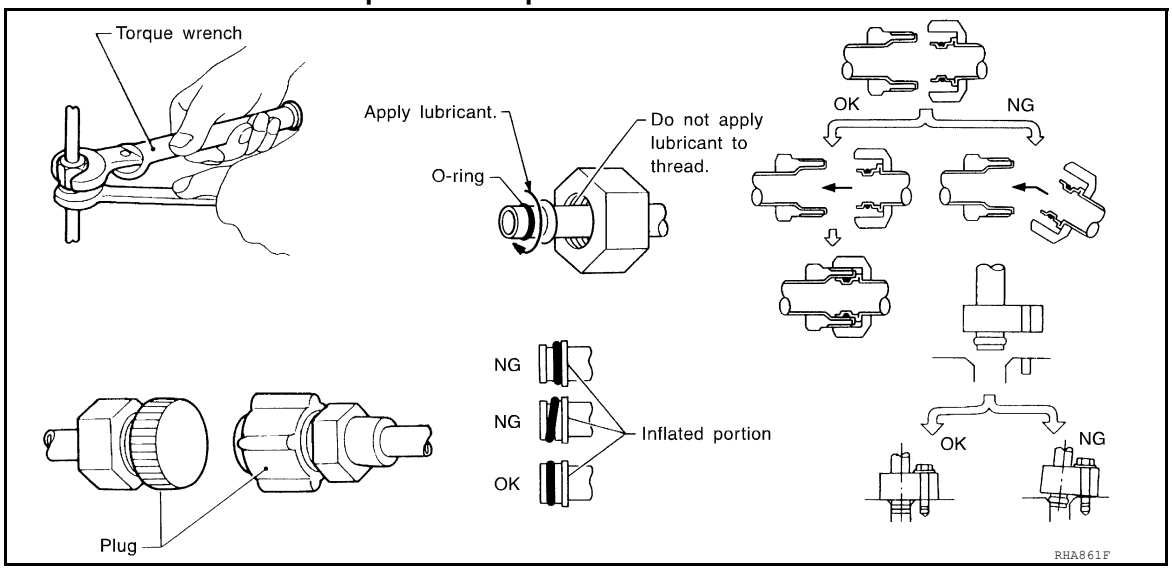

COMPRESSOR

CAUTION:

- **Plug all openings to prevent moisture and foreign matter from entering.**
- **When the compressor is removed, store it in the same way as it is when mounted on the vehicle.**
- **Follow “Oil Adjusting Procedure for Compressor Replacement" exactly when replacing or repairing compressor. Refer to HA-25, "Oil Adjusting Procedure for Compressor Replacement".**
- **Keep friction surfaces between clutch and pulley clean. Wipe them off by using a clean waste cloth moistened with solvent if the surface is contaminated with oil.**
- **Turn the compressor shaft by hand more than five turns in both directions after compressor service operation. This distributes oil equally inside the compressor. Let the engine idle and operate the compressor for one hour after the compressor is installed.**
- **After replacing the compressor magnet clutch, apply voltage to the new one and check for normal operation.**

Service Equipment

INFOID:0000000011279469

RECOVERY/RECYCLING RECHARGING EQUIPMENT

Be certain to follow the manufacturer’s instructions for machine operation and machine maintenance. Do not introduce any refrigerant other than that specified into the machine.

ELECTRONIC LEAK DETECTOR

Be certain to follow the manufacturer’s instructions for detector operation and maintenance.

VACUUM PUMP

The oil contained inside the vacuum pump is not compatible with the specified oil for HFC-134a (R-134a) A/C systems. The vent side of the vacuum pump is exposed to atmospheric pressure, so the vacuum pump oil may migrate out of the pump into the service hose. This is possible when the pump is switched OFF after evacuation (vacuuming) with the hose is connected to it.
To prevent this migration, use a manual valve placed near the hose-to-pump connection, as per the following:

- Vacuum pumps usually have a manual isolator valve as part of the pump. Close this valve to isolate the service hose from the pump.
- Use a hose equipped with a manual shut-off valve near the pump end for pumps without an isolator. Close the valve to isolate the hose from the pump.
- Disconnect the hose from the pump if the hose has an automatic shut-off valve. As long as the hose is connected, the valve is open and lubricating oil may migrate.

Some one-way valves open when vacuum is applied and close under no vacuum condition. Such valves may restrict the pump's ability to pull a deep vacuum and are not recommended.

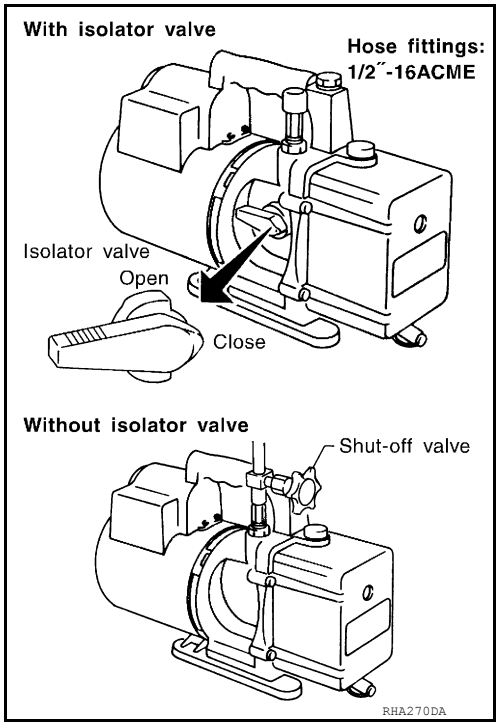

MANIFOLD GAUGE SET

Be certain that the gauge face indicates HFC-134a or R-134a. Be sure the gauge set has 1/2″-16 ACME threaded connections for service hoses. Confirm the set has been used only with refrigerant HFC-134a (R-134a) and specified oils.

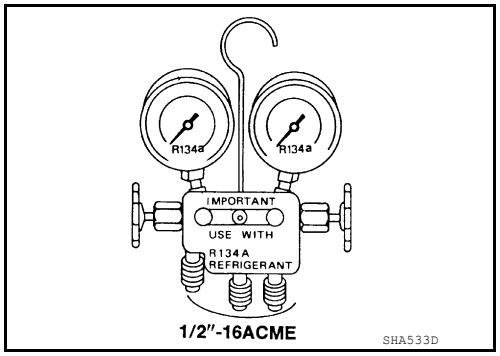

SERVICE HOSES

Be certain that the service hoses display the markings described (colored hose with black stripe). All hoses must be equipped with positive shut-off devices (either manual or automatic) near the end of the hoses opposite to the manifold gauge.

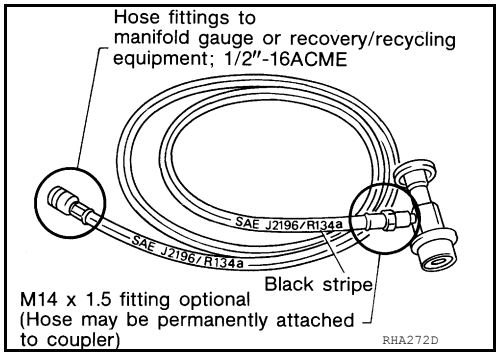

SERVICE COUPLERS

< PRECAUTION >

Do not attempt to connect HFC-134a (R-134a) service couplers to a CFC-12 (R-12) A/C system. The HFC-134a (R-134a) couplers do not properly connect to a CFC-12 (R-12) system. However, if an improper connection is attempted, refrigerant discharging and contamination may occur.

Shut-off valve rotation	A/C service valve
Clockwise	Open
Counterclockwise	Close

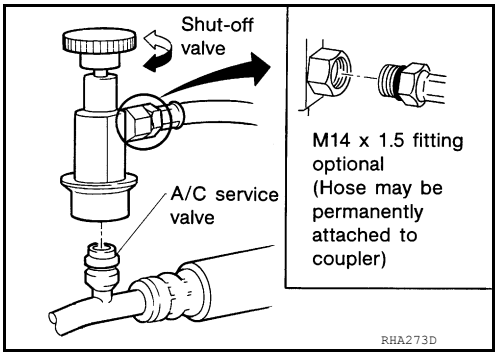

REFRIGERANT WEIGHT SCALE

Verify that no refrigerant other than HFC-134a (R-134a) and specified oils have been used with the scale. The hose fitting must be 1/2″-16 ACME if the scale controls refrigerant flow electronically.

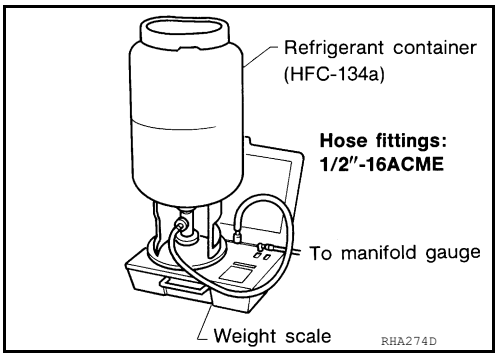

CHARGING CYLINDER

Using a charging cylinder is not recommended. Refrigerant may be vented into the air from cylinder's top valve when filling the cylinder with refrigerant. Also, the accuracy of the cylinder is generally less than that of an electronic scale or of quality recycle/recharge equipment.

PREPARATION

PREPARATION

Special Service Tool

INFOID:0000000011279470

The actual shape of the tools may differ from those illustrated here.

Tool number (TechMate No.) Tool name		Description
— (J-41425-NIS) Aluminum tube repair kit	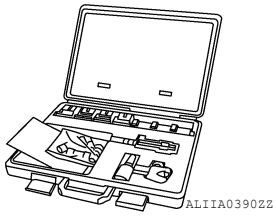	Repairing leaks in A/C tubes
— (J-38873-A) Drive plate installer	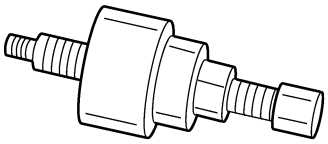	Installing pulley
— (J-41995) Electronic refrigerant leak detector	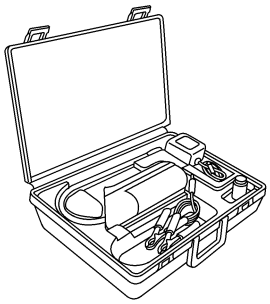	Power supply: • DC 12V (battery terminal)
— (J-48710) NISSAN ACR2009 RRR Unit	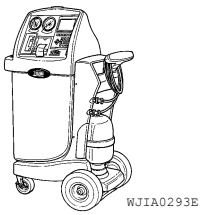	Refrigerant recovery, recycling and recharging

Tool number (TechMate No.) Tool name	Description
Service couplers • High side coupler (J-39500-20A) • Low side coupler (J-39500-24A) 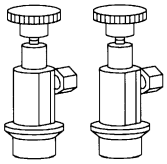 S-NT202	Hose fitting to service hose: • M14 x 1.5 fitting is optional or permanently attached.
— (J-46534) Trim Tool Set 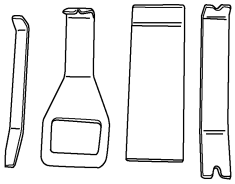 AWJIA0483ZZ	Removing trim components

Commercial Service Tool

INFOID:0000000011279471

(TechMate No.) Tool name	Description
(J-41810-NI) Refrigerant identifier equipment (R-134a) 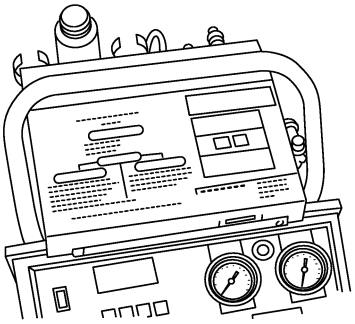 RJIA0197E	For checking refrigerant purity and system contamination
(—) Power Tool 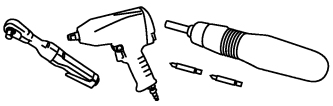 PIIB1407E	Loosening nuts, screws and bolts
— (J-39183-C) Manifold Gauge Set (with hoses and couplers) 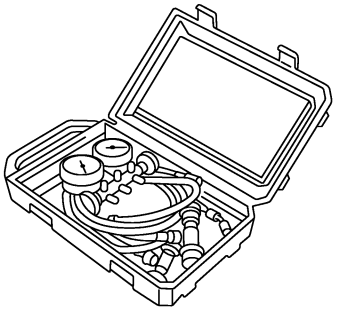 RJIA0196E	Identification: • The gauge face indicates R-134a. Fitting size-Thread size • 1/2”-16 ACME

(TechMate No.) Tool name		Description
Service Hoses: • High side hose (J-39500-72B) • Low side hose (J-39500-72R) • Utility hose (J-39500-72Y)	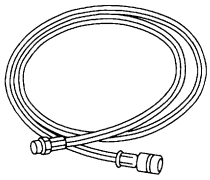 S-NT201	Hose color: • Low side hose: Blue with black stripe • High side hose: Red with black stripe • Utility hose: Yellow with black stripe or green with black stripe Hose fitting to gauge: • 1/2”-16 ACME
— (J-39699) Refrigerant Weight Scale	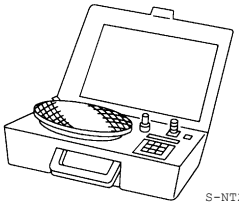 S-NT200	For measuring of refrigerant Fitting size-Thread size • 1/2”-16 ACME
— (J-39649) Vacuum Pump (Including the isolator valve)	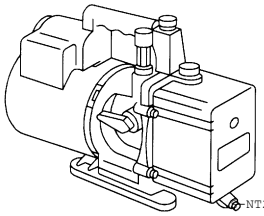 NT203	Capacity: • Air displacement: 4 CFM • Micron rating: 20 microns • Oil capacity: 482 g (17 oz) Fitting size-Thread size • 1/2”-16 ACME

Sealant and/or Oil

INFOID:0000000011279472

Tool number (TechMate No.) Tool name		Description
— (—) HFC-134a (R-134a) Refrigerant	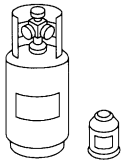 S-NT196	Container color: Light blue Container marking: HFC-134a (R-134a) Fitting size: Thread size • large container 1/2”-16 ACME
— (—) ND-OIL8	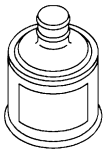 JMIIA1759ZZ	Type: Poly alkylene glycol oil (PAG), type ND-OIL8 Application: HFC-134a (R-134a) swash plate compressors

SYSTEM DESCRIPTION

COMPONENT PARTS

Component Parts Location

INFOID:0000000011279473

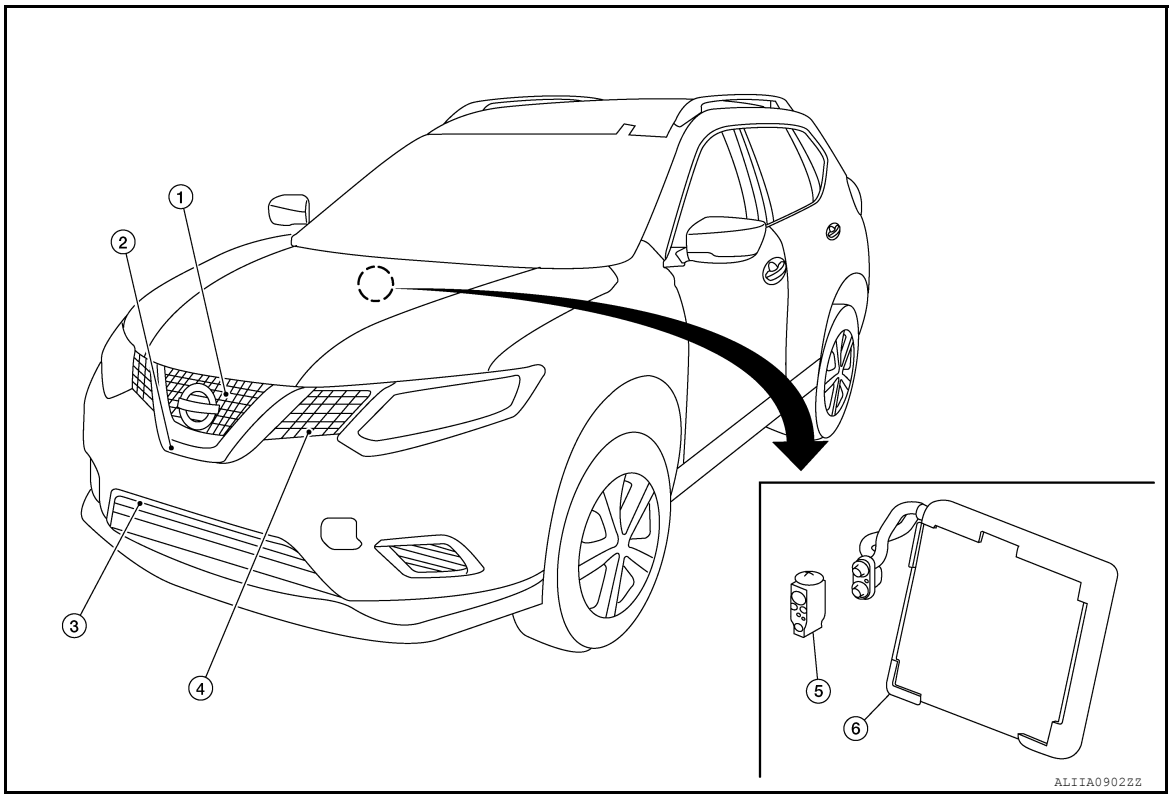

1. Condenser
2. Compressor
3. Refrigerant pressure sensor
4. Liquid tank
5. Expansion valve
6. Evaporator

Component Description

INFOID:0000000011279474

Component	Description
Compressor	Intakes, compresses and discharges refrigerant to circulate refrigerant inside the refrigerant system.
Condenser	Cools refrigerant discharged from compressor and transforms it to liquid refrigerant.
Liquid tank	Eliminates foreign matter in refrigerant and stores temporarily liquid refrigerant.
Refrigerant pressure sensor	Refer to EC-485, "Component Function Check".
Expansion valve	Transforms high-pressure liquid refrigerant to mist from low-pressure liquid refrigerant.
Evaporator	The mist from liquid refrigerant transforms to gas by evaporation by the air conveyed from blower motor. The air is cooled by the heat by evaporation.

SYSTEM

System Diagram

INFOID:0000000011279475

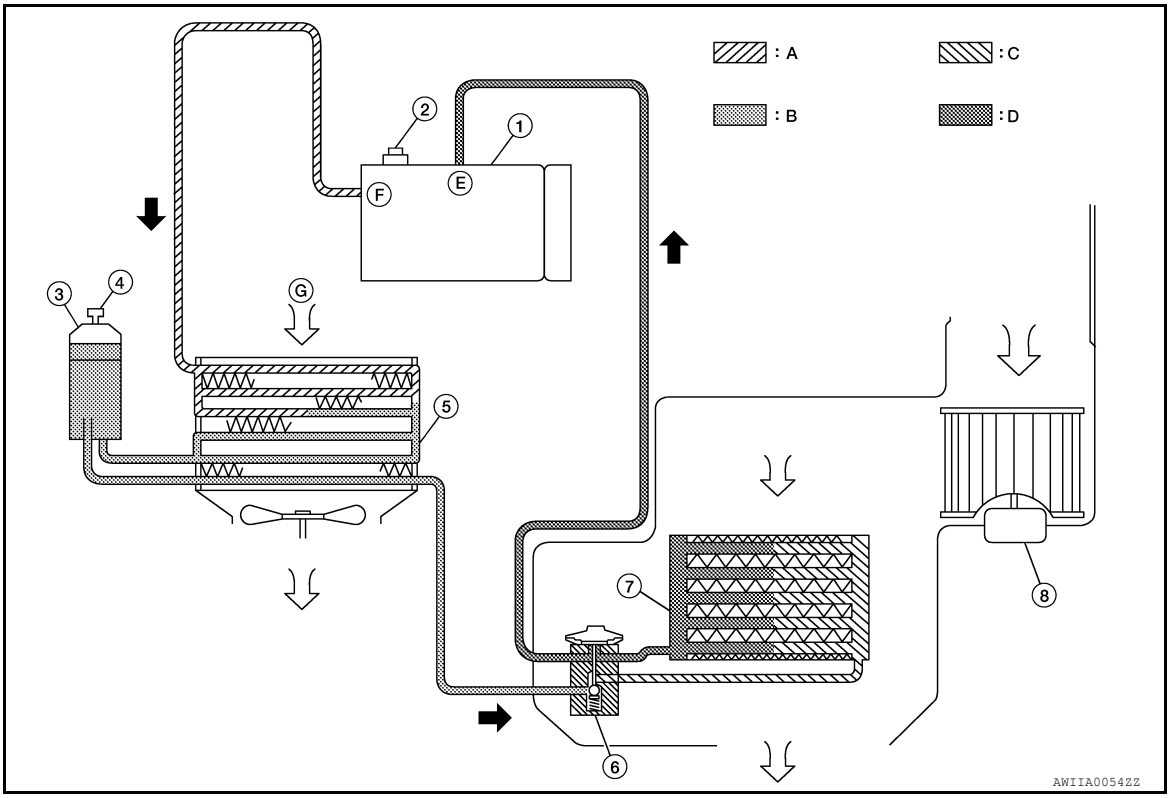

1.	Compressor	2.	Pressure relief valve	3.	Liquid tank
4.	Refrigerant pressure sensor	5.	Condenser	6.	Expansion valve
7.	Evaporator	8.	Blower motor	A.	High-pressure gas
B.	High-pressure liquid	C.	Low-pressure liquid	D.	Low-pressure gas
E.	Suction port	F.	Discharge port	G	Outside air

System Description

INFOID:0000000011279476

REFRIGERANT CYCLE

Refrigerant Flow

The refrigerant from the compressor flows through the condenser and liquid tank, evaporator, and returns to the compressor. The refrigerant evaporation in the evaporator is controlled by an expansion valve.

Freeze Protection

To prevent evaporator from freezing up, the evaporator air temperature is monitored and the voltage signal to the A/C auto amp. makes the A/C relay go OFF and stop the compressor.

REFRIGERANT SYSTEM PROTECTION

Refrigerant Pressure Sensor

- The refrigerant system is protected against excessively high or low pressures by the refrigerant pressure sensor, located on the liquid tank. The refrigerant pressure sensor detects the pressure inside the refrigerant line and sends the voltage signal to the ECM if the system pressure rises above or falls below the specifications.
- ECM turns the A/C relay to OFF and stops the compressor when the high-pressure side detected by refrigerant pressure sensor to have the following conditions:

- Approximately 3,120 kPa (31.8 kg/cm^2, 452 psi) or more (Engine speed is 1,500 rpm or more.)
- Approximately 2,740 kPa (27.9 kg/cm^2, 397 psi) or more (Engine speed is less than 1,500 rpm.)

- Approximately 120 kPa (1.2 kg/cm^2, 17 psi) or less

Pressure Relief Valve

The refrigerant system is also protected by a pressure relief valve, located in the rear head of the compressor. The release port on the pressure relief valve automatically opens and releases refrigerant into the atmosphere when the pressure of refrigerant in the system increases to an unusual level [more than 3,800 kPa (38.8 kg/cm^2, 551 psi)].

BASIC INSPECTION

DIAGNOSIS AND REPAIR WORKFLOW

Workflow

INFOID:0000000011279477

OVERALL SEQUENCE

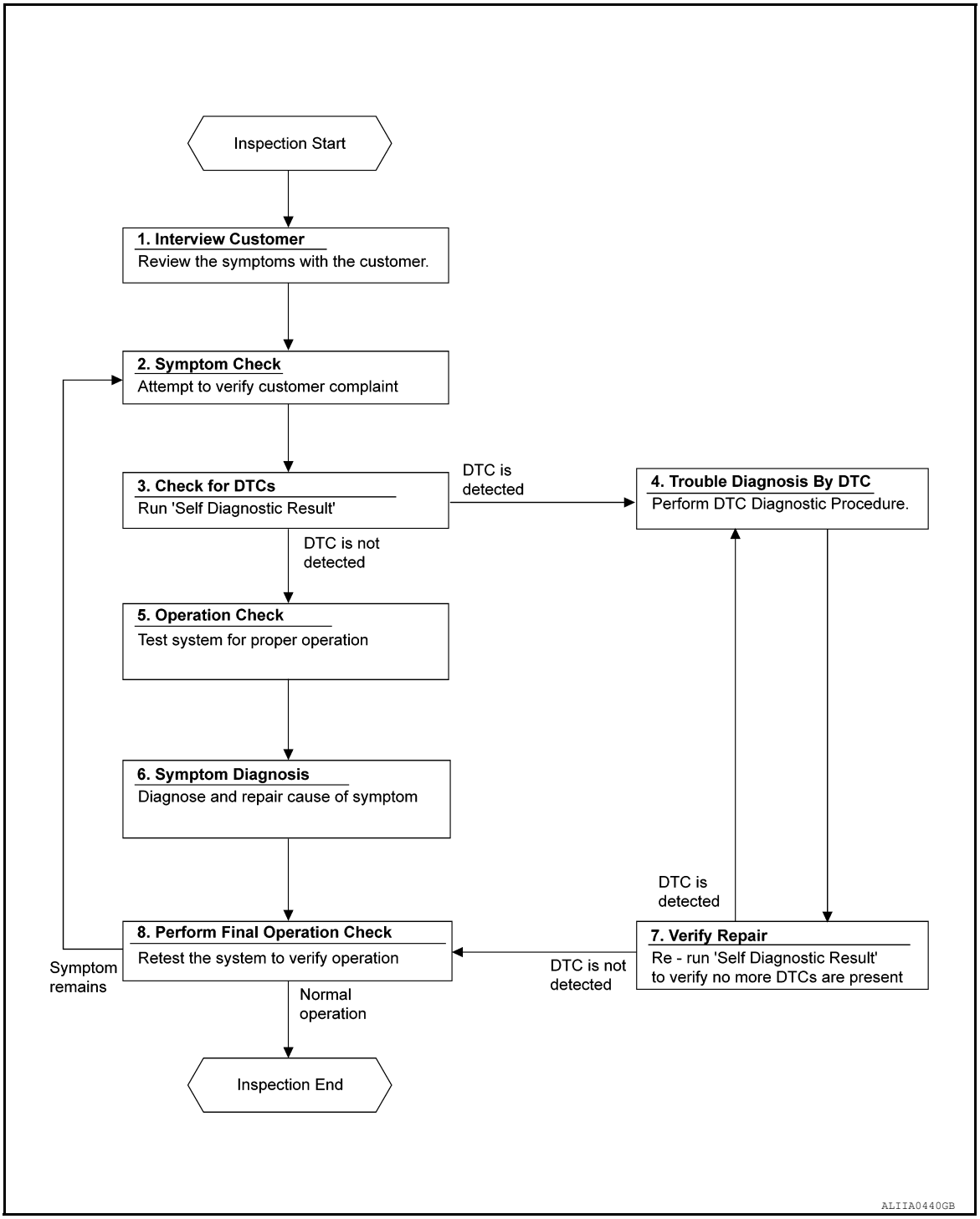

DETAILED FLOW

1.INTERVIEW CUSTOMER

Interview the customer to obtain as much information as possible about the conditions and environment under which the malfunction occurred.

>> GO TO 2.

2. SYMPTOM CHECK

Verify symptoms.

>> GO TO 3.

3. CHECK FOR DTCS

With CONSULT
1. Turn ignition switch ON.
2. Select “Self Diagnostic Result” of “HVAC”.
3. Check DTC.

Is any DTC detected?

YES >> GO TO 4.
NO >> GO TO 5.

4. PERFORM DTC DIAGNOSTIC PROCEDURE

Perform the diagnostic procedure for the detected DTC. Refer to HAC-32, "DTC Inspection Priority Chart" (automatic A/C) or HAC-135, "DTC Inspection Priority Chart" (manual A/C).

>> GO TO 7.

5. OPERATION CHECK

Perform the operation check. Refer to HAC-48, "Work Procedure" (automatic A/C) or HAC-149, "Work Procedure" (manual A/C).

>> GO TO 6.

6. SYMPTOM DIAGNOSIS

Check the symptom diagnosis table. Refer to HAC-96, "Diagnosis Chart By Symptom" (automatic A/C) or HAC-175, "Symptom Table" (manual A/C).

>> GO TO 8.

7. VERIFY REPAIR.

With CONSULT
1. Turn ignition switch ON.
2. Select “Self Diagnostic Result” of “HVAC”.
3. Check DTC.

Is any DTC detected?

YES >> GO TO 4.
NO >> GO TO 8.

8. PERFORM FINAL OPERATION CHECK

Perform the operation check. Refer to HAC-48, "Work Procedure" (automatic A/C) or HAC-149, "Work Procedure" (manual A/C).

Does it operate normally?

YES >> Inspection End.
NO >> GO TO 2.

SYMPTOM DIAGNOSIS

REFRIGERATION SYSTEM SYMPTOMS

Trouble Diagnosis For Unusual Pressure

INFOID:0000000011279478

Diagnose using a manifold gauge whenever system's high and/or low side pressure(s) is/are unusual. The marker above the gauge scale in the following tables indicates the standard (usual) pressure range. Refer to above table (Ambient air temperature-to-operating pressure table) since the standard (usual) pressure, however, differs from vehicle to vehicle.

Symptom Table

INFOID:0000000011279479

Gauge indication	Refrigerant cycle	Probable cause	Corrective action
Both high- and low-pressure sides are too high. 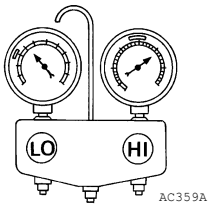	The pressure returns to normal is reduced soon after water is splashed on condenser.	Excessive refrigerant charge in refrigeration cycle.	Reduce refrigerant until specified pressure is obtained.
	Air suction by cooling fan is insufficient.	Insufficient condenser cooling performance. ↓ 1. Condenser fins are clogged. 2. Improper fan rotation of cooling fan.	• Clean condenser. • Check and repair cooling fan if necessary.
	• Low-pressure pipe is not cold. • When compressor is stopped high-pressure reading quickly drops by approximately 196 kPa (1.96 bar, 2 kg/cm^2, 28 psi). It then decreases gradually thereafter.	Poor heat exchange in condenser (After compressor operation stops, high-pressure decreases too slowly). ↓ Air in refrigeration cycle.	Evacuate repeatedly and recharge system.
	Engine tends to overheat.	Engine cooling systems malfunction.	Check and repair each engine cooling system.
	• An area of the low-pressure pipe is colder than areas near the evaporator outlet. • Low-pressure pipe is sometimes covered with frost.	• Excessive liquid refrigerant on low-pressure side. • Excessive refrigerant discharge flow. • Expansion valve is open a little compared with the specification. ↓ Improper expansion valve adjustment.	Replace expansion valve.
High-pressure side is too high and low-pressure side is too low. 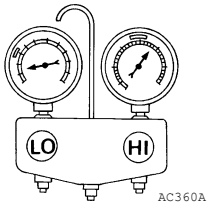	Upper side of condenser and high-pressure side are hot, however, liquid tank is not so hot.	High-pressure tube or parts located between compressor and condenser are clogged or crushed.	• Check and repair or replace malfunctioning parts. • Check lubricant for contamination.

Gauge indication	Refrigerant cycle	Probable cause	Corrective action
High-pressure side is too low and low-pressure side is too high. 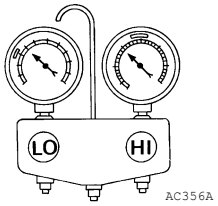	High- and low-pressure sides become equal soon after compressor operation stops.	Compressor pressure operation is improper. ↓ Damaged inside compressor packings.	Replace compressor.
	No temperature difference between high- and low-pressure sides.	Compressor pressure operation is improper. ↓ Damaged inside compressor packings.	Replace compressor.
Both high- and low-pressure sides are too low. 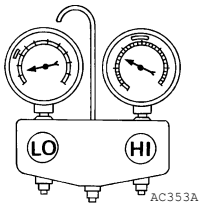	• There is a big temperature difference between liquid tank outlet and inlet. Outlet temperature is extremely low. • Liquid tank inlet and expansion valve are frosted.	Liquid tank inside is slightly clogged.	• Replace liquid tank. • Check lubricant for contamination.
	• Expansion valve inlet temperature is extremely low as compared with areas near liquid tank. • Expansion valve inlet is frosted. • Temperature difference occurs somewhere in high-pressure side.	High-pressure pipe located between liquid tank and expansion valve is clogged.	• Check and repair malfunctioning parts. • Check lubricant for contamination.
	Expansion valve and liquid tank are warm or slightly cool when touched.	Low refrigerant charge. ↓ Leaking fittings or components.	Check refrigerant for leaks. Refer to HA-21, "Leak Test".
	There is a big temperature difference between expansion valve inlet and outlet while the valve itself is frosted.	Expansion valve closes a little compared with the specification. ↓ 1. Improper expansion valve adjustment. 2. Malfunctioning expansion valve. 3. Outlet and inlet may be clogged.	• Remove foreign particles by using compressed air. • Replace expansion valve. • Check lubricant for contamination.
	An area of the low-pressure pipe is colder than areas near the evaporator outlet.	Low-pressure pipe is clogged or crushed.	• Check and repair malfunctioning parts. • Check lubricant for contamination.
	Air flow volume is not enough or is too low.	Evaporator is frozen.	• Check intake sensor circuit. Refer to HAC-180, "Diagnosis Procedure". • Replace compressor. • Repair evaporator fins. • Replace evaporator. • Check blower motor circuit. Refer to HAC-180, "Diagnosis Procedure".

Gauge indication	Refrigerant cycle	Probable cause	Corrective action
Low-pressure side sometimes becomes negative. 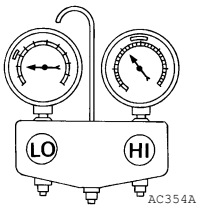	• Air conditioning system does not function and does not cyclically cool the compartment air. • The system constantly functions for a period of time after compressor is stopped and restarted.	Refrigerant does not discharge cyclically. ↓ Moisture is frozen at expansion valve outlet and inlet. ↓ Water is mixed with refrigerant.	• Drain water from refrigerant or replace refrigerant. • Replace liquid tank.
Low-pressure side becomes negative. 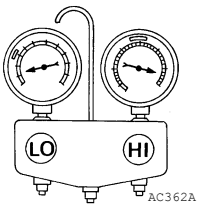	Liquid tank or front/rear side of expansion valve's pipe is frosted or wet with dew.	High-pressure side is closed and refrigerant does not flow. ↓ Expansion valve or liquid tank is frosted.	Leave the system at rest until no frost is present. Start it again to check whether or not the malfunction is caused by water or foreign particles. • Cooling is initially okay if water is the cause. Then the water freezes causing a blockage. Drain water from refrigerant or replace refrigerant. • Remove expansion valve and remove the particles with dry and compressed air (not shop air) if due to foreign particles. • Replace expansion valve if either of the above methods cannot correct the malfunction. • Replace liquid tank. • Check lubricant for contamination.

COMPRESSOR SYSTEM SYMPTOMS

Symptom Table

INFOID:0000000011279480

Follow the next table and perform trouble diagnosis if there is a compressor unit malfunction (internal noise, insufficient cooling).

Symptom	Inspection method	Check list	Result	Action
Noise from compressor unit When A/C is ON. (rattling or rolling sound)	Cooker system internal pressure	Check with manifold gauge	Both high- and low-pressure sides are high.*2	Recharge with proper amount of refrigerant.
			High/low-pressures hunt.*2	Replace compressor only.
	Check compressor oil condition.	Sample compressor oil and judge.	Refer to the criteria shown in compressor lubricant.	Judgment result 1: Replace compressor only. Judgment result 2: Replace compressor and liquid tank.
Insufficient cooling*1	Compressor body	Check rotation of compressor. If sized or stuck, sample compressor oil and judge.		
	Cooler system internal pressure	Check with a manifold gauge. Sample compressor oil and judge if the difference between high-pressure and low-pressure is small or if they are almost the same.		
Outlet air temperature rises temporarily while driving.*2	—	—	—	Replace compressor only.

*1: First conduct inspection according to trouble diagnosis for each malfunction.
*2: Applicable to variable capacity compressor only.

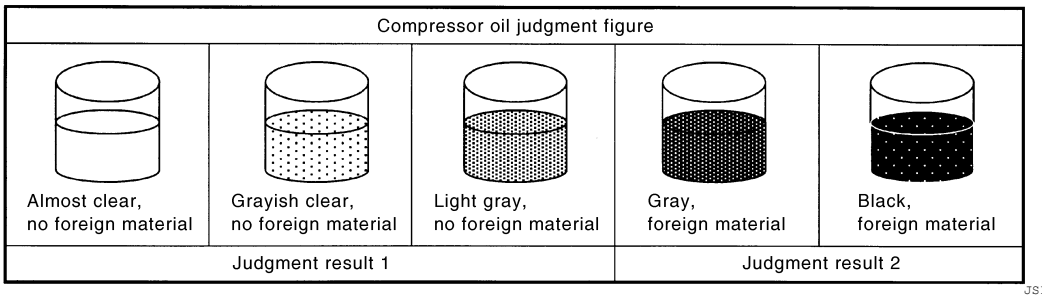

JSIIA0927GB

PERIODIC MAINTENANCE

REFRIGERANT

Description

INFOID:0000000011279481

CONNECTION OF SERVICE TOOLS AND EQUIPMENT

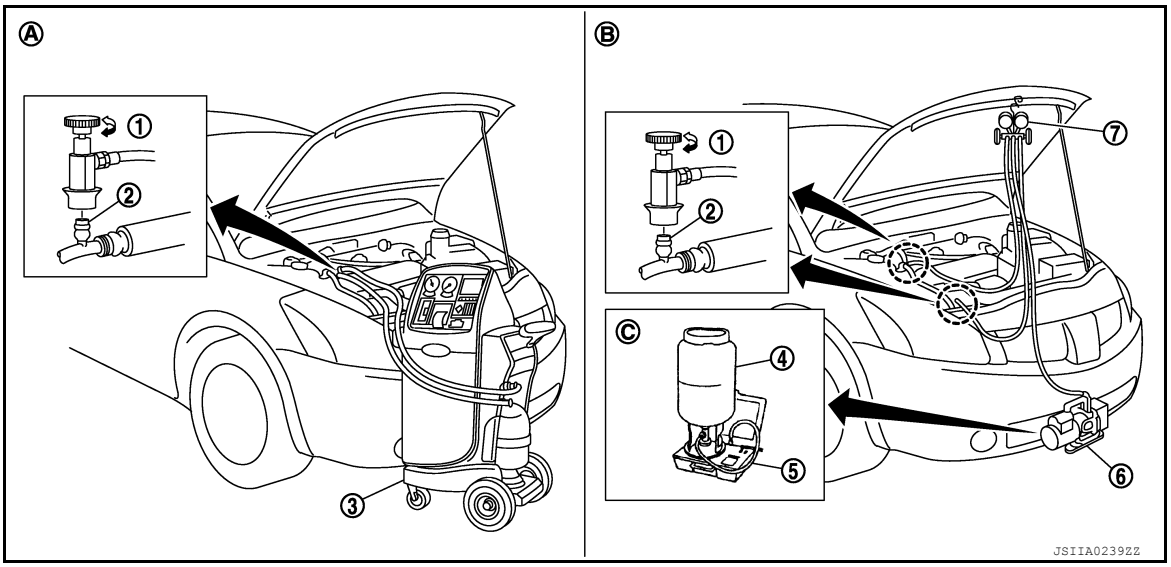

1. Shut-off valve	2. A/C service valve	3. Recovery/recycling/recharging equipment
4. Refrigerant container (HFC-134a)	5. Weight scale	6. Vacuum pump
7. Manifold gauge set		
A. Preferred (best) method	B. Alternative method	C. For charging

Leak Test

INFOID:0000000011279482

CHECK REFRIGERANT LEAKS USING ELECTRONIC LEAK DETECTOR

WARNING:
Do not check for refrigerant leaks while the engine is running.
CAUTION:
Be careful of the following items so that inaccurate checks or misidentifications are avoided.
- **Do not allow refrigerant vapor, shop chemical vapors, cigarette smoke or others around the vehicle.**
- **Always check for refrigerant leaks in a low air flow environment so that refrigerant may not disperse when leaks occur.**

1. Stop the engine.
2. Connect recovery/recycling/recharging equipment or manifold gauge set to A/C service valve.
3. Check that A/C refrigerant pressure is 345 kPa (3.52 kg/cm^2, 50 psi) or more when temperature is 16°C (61°F) or more. When pressure is lower than the specified value, recycle refrigerant completely and fill refrigerant to the specified level.
   NOTE:
   Leaks may not be detected if A/C refrigerant pressure is 345 kPa (3.52 kg/cm^2, 50 psi) or less when temperature is less than 16°C (61°F).
4. Clean area where refrigerant leak check is performed and check for refrigerant leak along all surfaces of pipe connections and A/C system components using electronic leak detector probe.
   CAUTION:
   - **Continue checking when a leak is found. Always continue and complete checking along all pipe connections and A/C system components for additional leaks.**
   - **When a leak is detected, clean leak area using compressed air and check again.**

- **When checking leaks of cooling unit inside, always clean inside of drain hose so that the probe surface may not be exposed to water or dirt.**

NOTE:
- Always check for leaks starting from high-pressure side and continue to low-pressure side.
- When checking for leaks of cooling unit inside, operate blower fan motor for 15 minutes or more at the maximum fan speed while the engine is stopped, and then insert electrical leak detector probe into drain hose and hold for 10 minutes or more.
- When disconnecting shut-off valve that is connected to A/C service valve, always evacuate remaining refrigerant so that misidentification can be avoided.

5. Repair or replace parts where refrigerant leaks are detected.
6. Start the engine and set A/C control in the following conditions.
   - A/C switch ON
   - Air flow: VENT (ventilation)
   - Intake door position: Recirculation
   - Temperature setting: Full cold
   - Fan (blower) speed: Maximum speed set
7. Run the engine at approximately 1,500 rpm for 2 minutes or more.
8. Stop the engine. Check again for refrigerant leak. Go to step 4.

WARNING:
Be careful not to get burned when the engine is hot.

NOTE:
- Start refrigerant leak check immediately after the engine is stopped.
- When refrigerant circulation is stopped, pressure on the low-pressure side rises gradually, and after this, pressure on the high-pressure side falls gradually.
- The higher the pressure is, the easier it is to find the refrigerant leak.

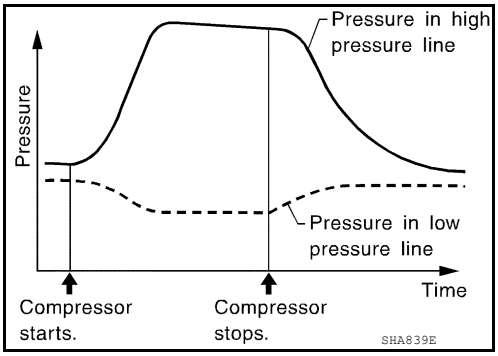

Recycle Refrigerant

INFOID:0000000011279483

WARNING:
- **Always use HFC-134a for A/C refrigerant. If CFC-12 is accidentally charged, compressor is damaged due to insufficient lubrication.**
- **Always observe and follow precautions described on refrigerant container. Incorrect handling may result in an explosion of refrigerant container, frostbite or the loss of eyesight.**
- **Do not breathe A/C refrigerant and oil vapor or mist. Exposure may irritate eyes, nose, or throat.**
- **Do not allow HFC-134a to be exposed to an open flame or others because it generates poisonous gas when in contact with high temperature objects. Keep workshop well ventilated.**

1. Perform oil return operation. Refer to HA-24, "Perform Oil Return Operation". (If refrigerant or oil leak is detected in a large amount, omit this step, and go to step 2.)

   CAUTION:
   Do not perform oil return operation if a large amount of refrigerant or oil leak is detected.
2. Check gauge pressure readings of recovery/recycling/recharging equipment. When remaining pressure exists, recycle refrigerant from high-pressure hose and low-pressure hose.

   NOTE:
   Follow manufacturer instructions for the handling or maintenance of the equipment. Do not fill the equipment with non-specified refrigerant.
3. Remove A/C service valve cap from the vehicle.
4. Connect recovery/recycling/recharging equipment to A/C service valve.
5. Operate recovery/recycling/recharging equipment, and recycle refrigerant from the vehicle.
6. Evacuate air for 10 minutes or more to remove any remaining refrigerant integrated to compressor oil, etc.
7. Refrigerant recycle operation is complete.

Charge Refrigerant

INFOID:0000000011279484

WARNING:

- **Always use HFC-134a for A/C refrigerant. If CFC-12 is accidentally charged, compressor is damaged due to insufficient lubrication.**
- **Always observe and follow precautions described on refrigerant container. Incorrect handling may result in an explosion of refrigerant container, frostbite, or the loss of eyesight.**
- **Do not breathe A/C refrigerant and oil vapor or mist. Exposure my irritate eyes, nose, or throat.**
- **Do not allow HFC-134a to be exposed to an open flame or others because it generates poisonous gas when in contact with high temperature objects. Keep workshop well ventilated.**

1. Connect recovery/recycling/recharging equipment to the A/C service valve.
2. Operate recovery/recycling/recharging equipment, and evacuate air from A/C system for 25 minutes or more.
   CAUTION:
   Evacuate air for 15 minutes or more if the parts are replaced.
3. Check the airtightness of A/C system for 25 minutes or more. If pressure raises more than the specified level, charge A/C system with approximately 200g refrigerant and check that there is no refrigerant leak. Refer to HA-21, "Leak Test".
   CAUTION:
   Check the airtightness for 15 minutes or more if the parts are replaced.
4. If parts other than compressor are replaced, fill compressor oil according to parts that are replaced.
5. Charge the specified amount of refrigerant to A/C system.
6. Check that A/C system operates normally.
7. Disconnect recovery/recycling/recharging equipment. (Collect the refrigerant from the high-pressure hose and low-pressure hose of recovery/recycling/recharging equipment.)
8. Install A/C service valve cap.
9. Refrigerant charge is complete.

OIL

Description

INFOID:0000000011279485

MAINTENANCE OF OIL LEVEL

The compressor oil is circulating in the system together with the refrigerant. It is necessary to fill compressor with oil when replacing A/C system parts or when a large amount of refrigerant leak is detected. It is important to always maintain oil level within the specified level or otherwise the following conditions may occur:

- Insufficient oil amount: Stuck compressor
- Excessive oil amount: Insufficient cooling (caused by insufficient heat exchange)

Oil Type: ND-OIL8 (PAG)

Inspection

INFOID:0000000011279486

If a compressor is malfunctioning (internal noise, insufficient cooling), check the compressor oil.

1. COMPRESSOR OIL JUDGMENT

1. Remove the compressor. Refer to HA-29, "Removal and Installation".
2. Sample compressor oil and judge below according to the figure.

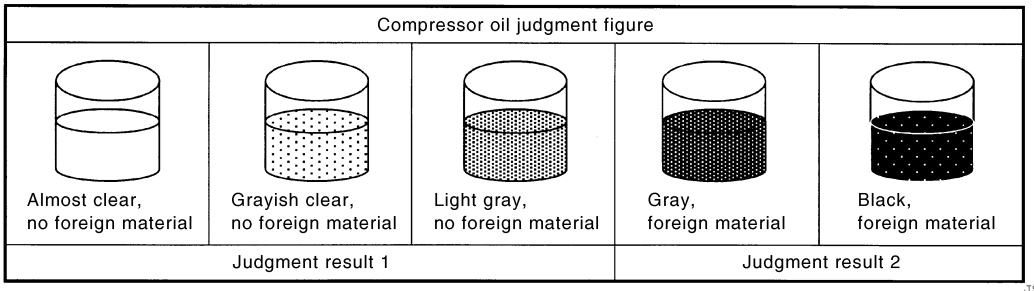

JSIIA0927GB

Judgement result 1>>Replace compressor only.
Judgement result 2>>Replace compressor and condenser (includes liquid tank).

Perform Oil Return Operation

INFOID:0000000011279487

CAUTION:

If a large amount of refrigerant or oil leak is detected, do not perform oil return operation.

1. Start the engine and set to the following conditions:
   - Engine speed: Idling to 1,200 rpm
   - A/C switch: ON
   - Fan (blower) speed: Maximum speed set
   - Intake door position: Recirculation
   - Temperature setting: Full cold
2. Perform oil return operation for approximately 10 minutes.
3. Stop the engine.
4. Oil return operation is complete.

Oil Adjusting Procedure for Components Replacement Except Compressor

INFOID:0000000011279488

Fill with oil for the amount that is calculated according to the following conditions.
Example: Oil amount to be added when replacing evaporator [m ℓ (US fl oz, Imp fl oz)] = 75 (2.5, 2.6) + α

Conditions	Oil amount to be added to A/C system m ℓ (US fl oz, Imp fl oz)
Replace evaporator	75 (2.5, 2.6)
Replace condenser (includes liquid tank)	80 (2.7, 2.8)

Conditions		Oil amount to be added to A/C system m ℓ (US fl oz, Imp fl oz)
Refrigerant leak is detected	Large amount leak	30 (1.0, 1.1)
	Small amount leak	—
Oil amount that is recycled together with refrigerant during recycle operation		α

Oil Adjusting Procedure for Compressor Replacement

INFOID:0000000011279489

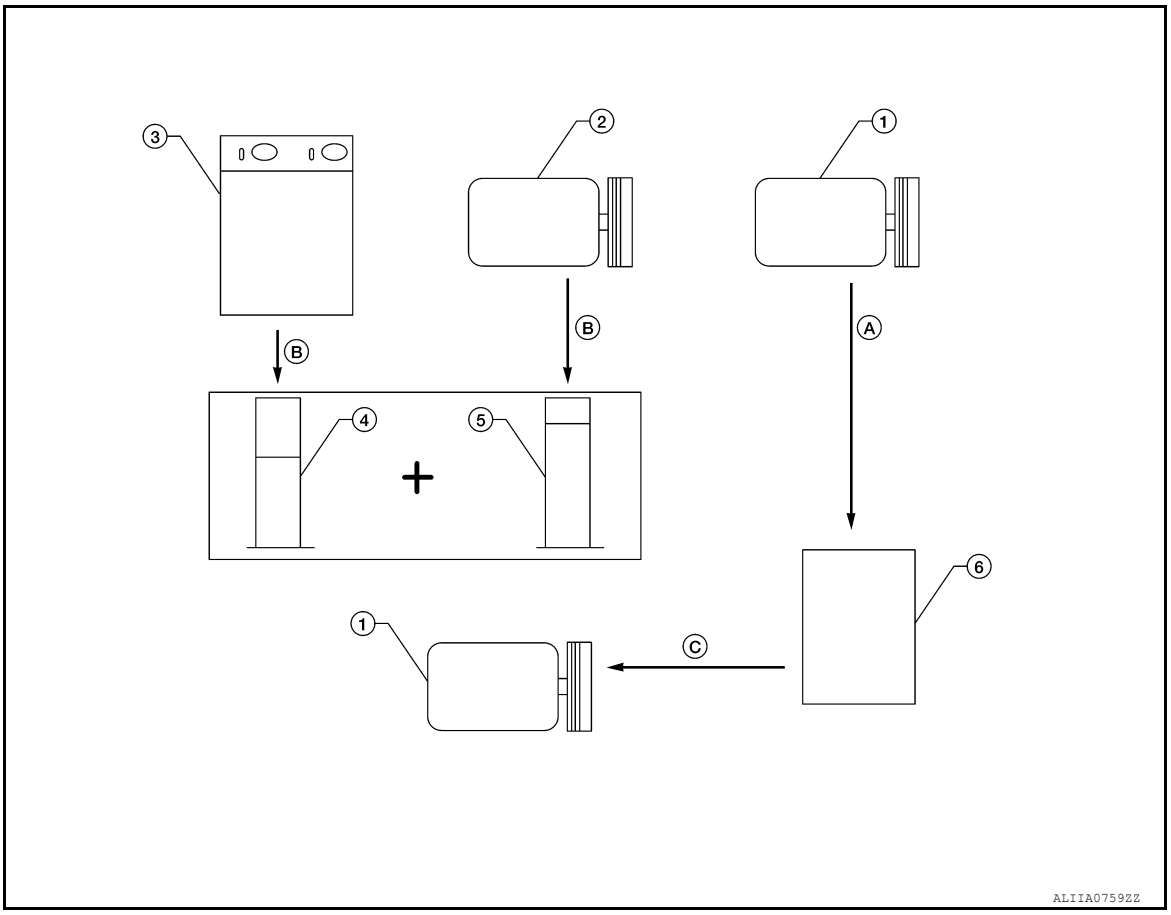

1.	New compressor	2.	Old compressor	3.	Recovery/recycling equipment
4.	Measuring cup X	5.	Measuring cup Y	6.	New oil
A.	Drain oil from the new compressor into clean container	B.	Record amount of oil recovered	C.	Install new oil equal to recorded amounts in measuring cups X and Y

1. Before connecting recovery/recycling equipment to vehicle, check recovery/recycling equipment gauges. No refrigerant pressure should be displayed. If NG, recover refrigerant from equipment lines.
2. Connect recovery/recycling equipment to vehicle. Confirm refrigerant purity in supply tank using recovery/recycling equipment and refrigerant identifier. If NG, refer to HA-4, "Precautions For Refrigerant System Service".
3. Confirm refrigerant purity in vehicle A/C system using recovery/recycling equipment and refrigerant identifier. If NG, refer to HA-4, "Precautions For Refrigerant System Service".
4. Discharge refrigerant into the refrigerant recovery/recycling equipment. Measure oil discharged into the recovery/recycling equipment.
5. Drain the oil from the “old” (removed) compressor into a graduated container and recover the amount of oil drained.
6. Drain the oil from the “new” compressor into a separate, clean container.
7. Measure an amount of new oil installed equal to amount drained from “old” compressor. Add this oil to “new” compressor through the suction port opening.

8. Measure an amount of new oil equal to the amount recovered during discharging. Add this oil to “new” compressor through the suction port opening.

PERFORMANCE TEST

Inspection

INFOID:0000000011279490

INSPECTION PROCEDURE

1. Connect recovery/recycling/recharging equipment (for HFC-134a) or manifold gauge.
2. Start the engine, and set to the following condition.

Test condition

Surrounding condition		Indoors or in the shade (in a well-ventilated place)
Vehicle condition	Door	Closed
	Door glass	Full open
	Hood	Open
	Engine speed	Idle speed
A/C condition	Temperature control switch or dial	Full cold
	A/C switch	ON
	Air outlet	VENT (ventilation)
	Intake door position	Recirculation
	Fan (blower) speed	Maximum speed set

3. Maintain test condition until A/C system becomes stable. (Approximately 10 minutes)
4. Check that test results of “recirculating-to-discharge air temperature” and “ambient air temperature-to-operating pressure” are within the specified value.
5. When test results are within the specified value, inspection is complete.
   If any of test result is out of the specified value, perform diagnosis by gauge pressure. Refer to HA-17, "Symptom Table".

RECIRCULATING-TO-DISCHARGE AIR TEMPERATURE TABLE

Inside air (Recirculating air) at blower assembly inlet		Discharge air temperature from center ventilator °C (°F)
Relative humidity %	Air temperature °C (°F)	
50 – 60	20 (68)	4.7 – 6.7 (40 – 44)
	25 (77)	8.6 – 11.1 (47 – 52)
	30 (86)	12.6 – 15.6 (55 – 60)
	35 (95)	19.0 – 22.5 (66 – 73)
60 – 70	20 (68)	6.7 – 8.7 (44 – 48)
	25 (77)	11.1 – 13.6 (52 – 56)
	30 (86)	15.6 – 18.6 (60 – 65)
	35 (95)	22.5 – 26.0 (73 – 79)

AMBIENT AIR TEMPERATURE-TO-OPERATING PRESSURE TABLE

Fresh air		High-pressure (Discharge side) kPa (kg/cm^2, psi)	Low-pressure (Suction side) kPa (kg/cm^2, psi)
Relative humidity %	Air temperature °C (°F)		
50 – 70	25 (77)	909 – 1,112 (9.2 – 11.3, 131.8 – 161.2)	159 – 194 (1.6 – 2.0, 23.1 – 28.1)
	30 (86)	1,073 — 1,312 (10.9 – 13.4, 155.6 – 190.2)	211 – 259 (2.2 – 2.6, 30.6 – 37.6)
	35 (95)	1,445 – 1,766 (14.7 – 18.0, 209.5 – 256.1)	247 – 300 (2.5 – 3.1, 35.8 – 43.5)
	40 (104)	1,650 – 2,017 (16.8 – 20.6, 239.3 – 292.5)	290 – 355 (3.0 – 3.6, 42.1 – 51.5)

REMOVAL AND INSTALLATION

COMPRESSOR

Exploded View

INFOID:0000000011279491

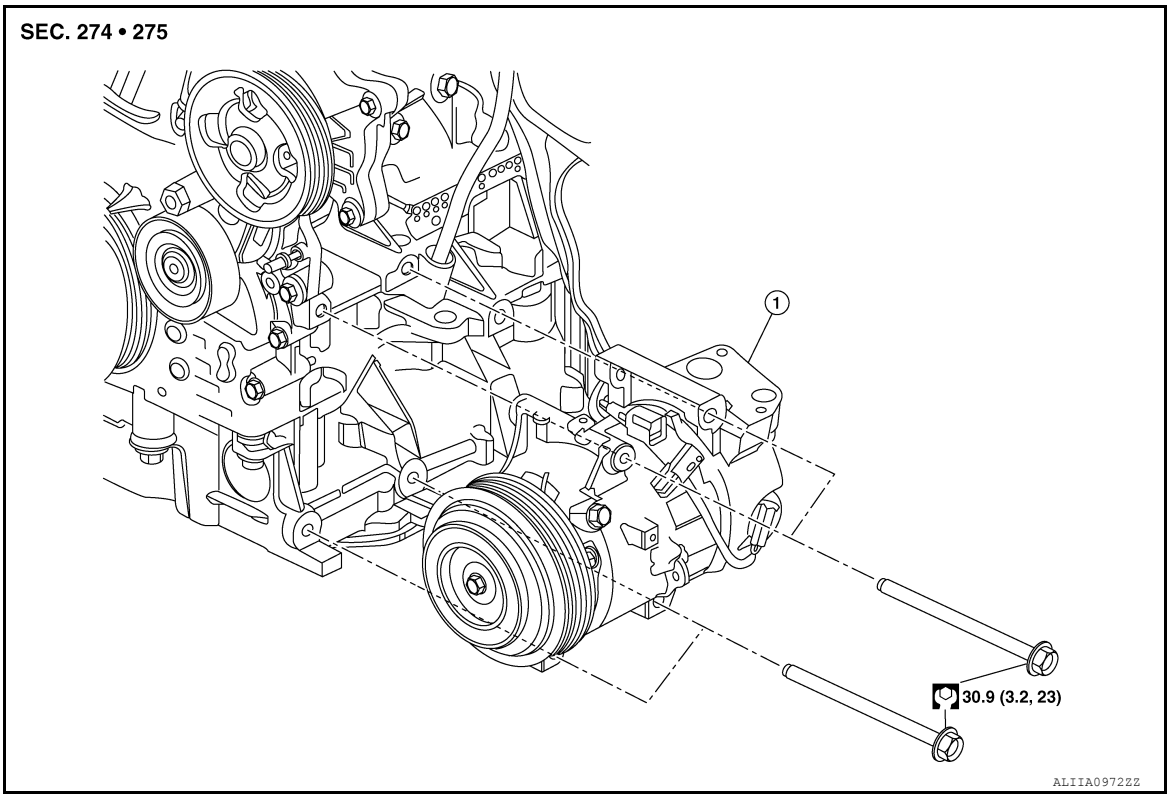

1. Compressor

Removal and Installation

INFOID:0000000011279492

REMOVAL

1. Discharge the refrigerant. Refer to HA-22, "Recycle Refrigerant".
2. Remove the engine under cover. Refer to EXT-37, "ENGINE UNDER COVER : Removal and Installation".
3. Release the drive belt from the compressor. Refer to EM-15, "Removal and Installation".
   NOTE:
   Complete removal of the drive belt is not necessary.
4. Partially remove the front fender protector (RH). Refer to EXT-28, "FENDER PROTECTOR : Removal and Installation".
5. Remove the nut (A) that retains the low-pressure flexible hose to the compressor.
   CAUTION:
   Cap or wrap the joint of the pipe with suitable material such as vinyl tape to avoid the entry of air.

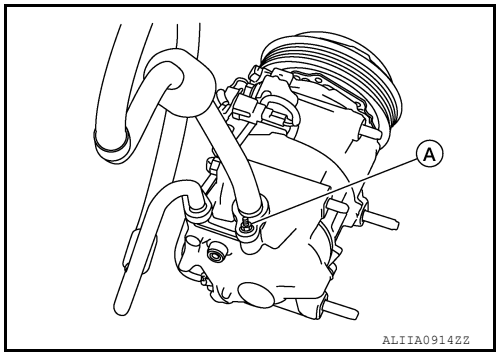

6. Remove the bolt (A) that retains the high-pressure flexible hose (2) to the compressor (1).
   CAUTION:
   Cap or wrap the joint of the pipe with suitable material such as vinyl tape to avoid the entry of air.

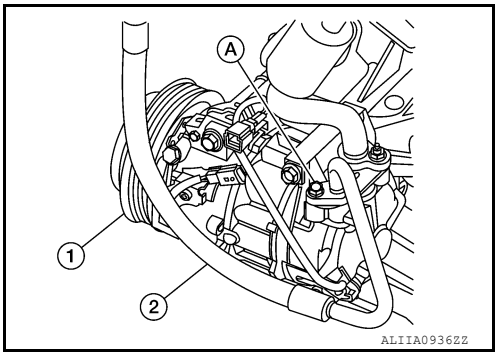

7. Disconnect the harness connectors from the compressor.
8. Remove bolts and compressor.

INSTALLATION

Installation is in the reverse order of removal.

CAUTION:

- **Tighten nut/bolt to specification. Refer to HA-31, "Exploded View".**
- **Do not reuse O-rings.**
- **Apply A/C oil to new O-rings for installation.**
- **After charging refrigerant, check for leaks. Refer to HA-21, "Leak Test".**
- **After installation, check the tension of the drive belt. Refer to EM-15, "Checking".**

COOLER PIPE AND HOSE

Exploded View

INFOID:0000000011279493

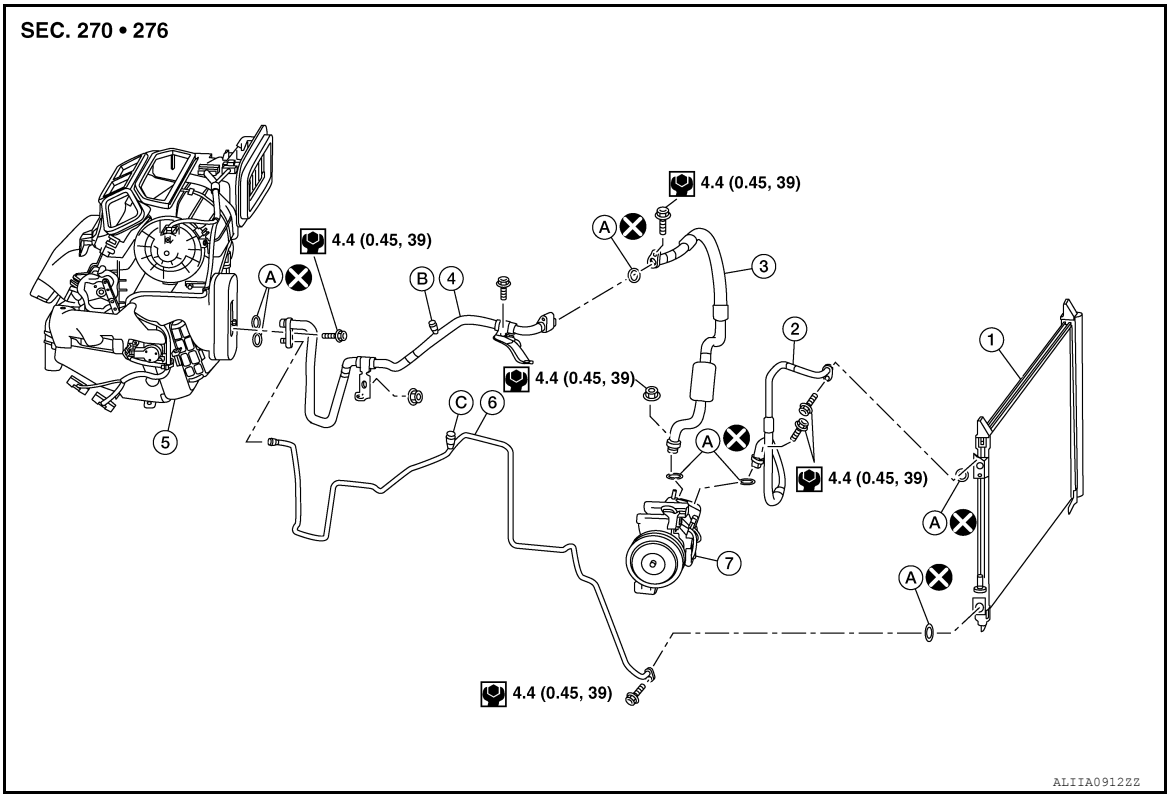

1. Condenser
2. High-pressure flexible hose
3. Low-pressure flexible hose
4. Low-pressure pipe
5. Heating and cooling unit assembly
6. High-pressure pipe
7. Compressor
A. O-ring
B. Low-pressure service port
C. High-pressure service port

LOW-PRESSURE PIPE

LOW-PRESSURE PIPE : Removal and Installation

INFOID:0000000011279494

REMOVAL

1. Discharge the refrigerant. Refer to HA-22, "Recycle Refrigerant".
2. Remove bolts (A) and engine upper mount (1).

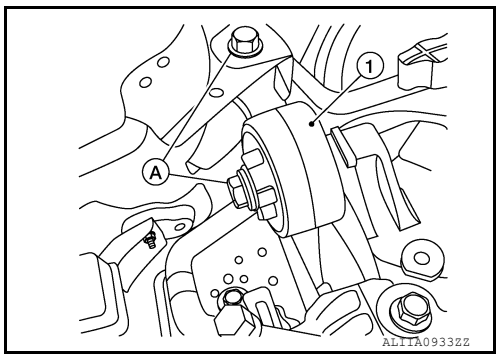

3. Remove the bolt (A) that retains the low-pressure flexible hose to the low-pressure pipe.
   CAUTION:
   Cap or wrap the joint of the pipe with suitable material such as vinyl tape to avoid the entry of air.

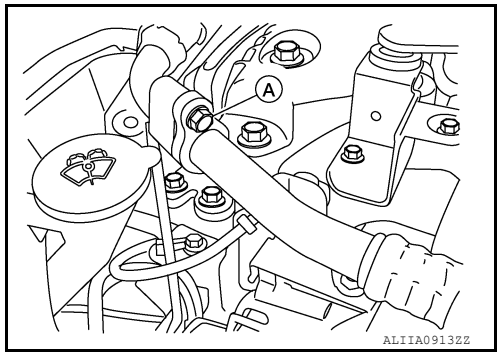

4. Remove low-pressure pipe bracket bolts (A) and bracket.

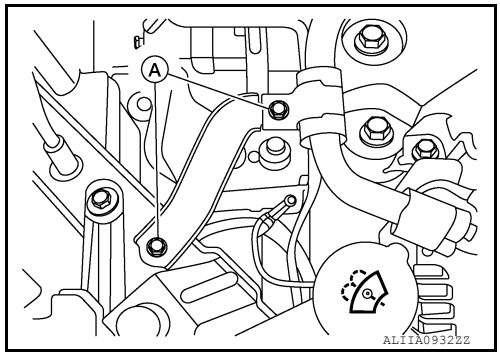

5. Release high-pressure pipe (2) from clamp (A).
6. Remove nut (B) and low-pressure pipe (1).

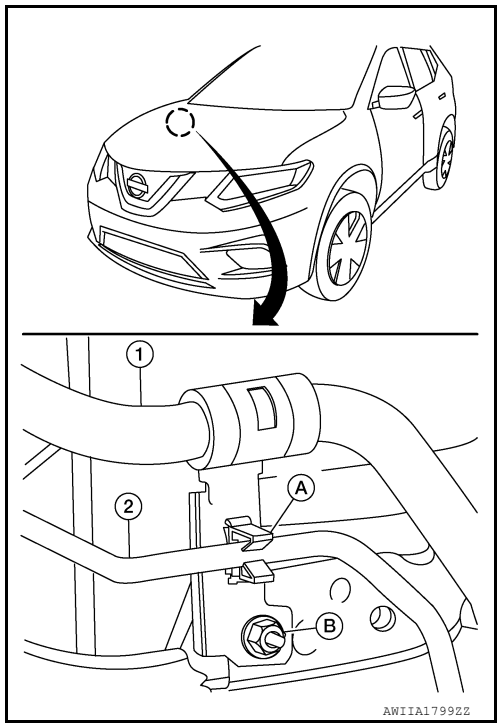

7. Remove the bolt (A) that retains the low-pressure and high-pressure pipe to the expansion valve (1).
   CAUTION:

Cap or wrap the joint of the pipe with suitable material such as vinyl tape to avoid the entry of air.

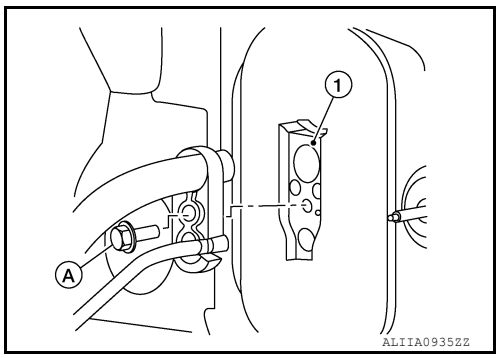

8. Remove low-pressure pipe.

INSTALLATION

Installation is in the reverse order of removal.

CAUTION:

- **Tighten bolts to specified torque. Refer to HA-31, "Exploded View".**
- **Do not reuse O-rings.**
- **Apply A/C oil to new O-rings for installation.**
- **After charging refrigerant, check for leaks. Refer to HA-21, "Leak Test".**

LOW-PRESSURE FLEXIBLE HOSE

LOW-PRESSURE FLEXIBLE HOSE : Removal and Installation

INFOID:0000000011279495

REMOVAL

1. Discharge the refrigerant. Refer to HA-22, "Recycle Refrigerant".
2. Remove the bolt (A) that retains the low-pressure flexible hose to the low-pressure pipe.

   CAUTION:

   Cap or wrap the joint of the pipe with suitable material such as vinyl tape to avoid the entry of air.

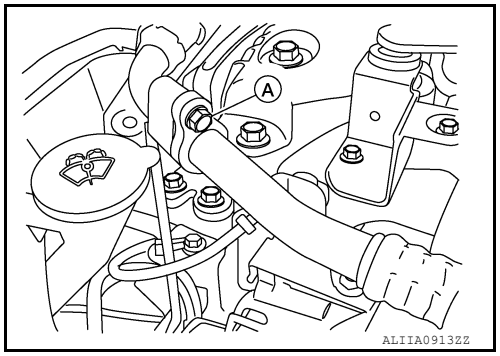

3. Remove the nut (A) that retains the low-pressure flexible hose to the compressor.

   CAUTION:

   Cap or wrap the joint of the pipe with suitable material such as vinyl tape to avoid the entry of air.

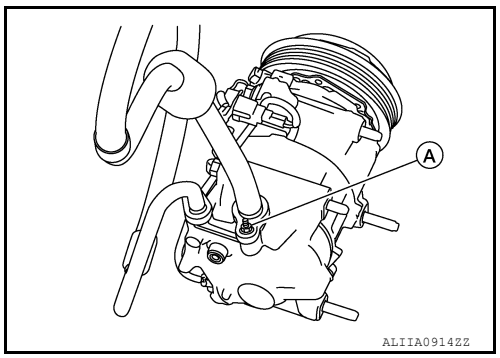

4. Remove the low-pressure flexible hose.

INSTALLATION

Installation is in the reverse order of removal.

CAUTION:

- **Tighten nut/bolt to specified torque. Refer to HA-31, "Exploded View".**
- **Do not reuse O-rings.**

- **Apply A/C oil to new O-rings for installation.**
- **After charging refrigerant, check for leaks. Refer to HA-21, "Leak Test".**

HIGH-PRESSURE PIPE

HIGH-PRESSURE PIPE : Removal and Installation

INFOID:0000000011279496

REMOVAL

1. Discharge the refrigerant. Refer to HA-22, "Recycle Refrigerant".
2. Remove front bumper fascia. Refer to EXT-17, "Removal and Installation".
3. Remove air duct assembly. Refer to EM-26, "Exploded View".
4. Remove bolts (A) and upper engine mount (1).

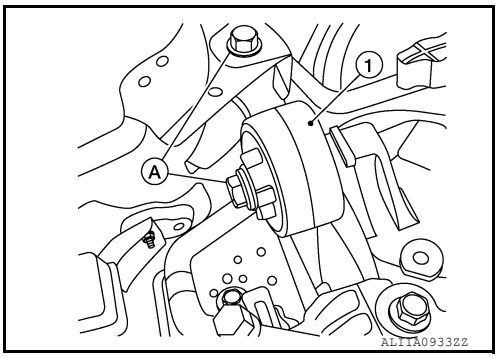

5. Release high-pressure pipe (2) from clamp (A).
   (1): Low-pressure pipe
   (B): Nut

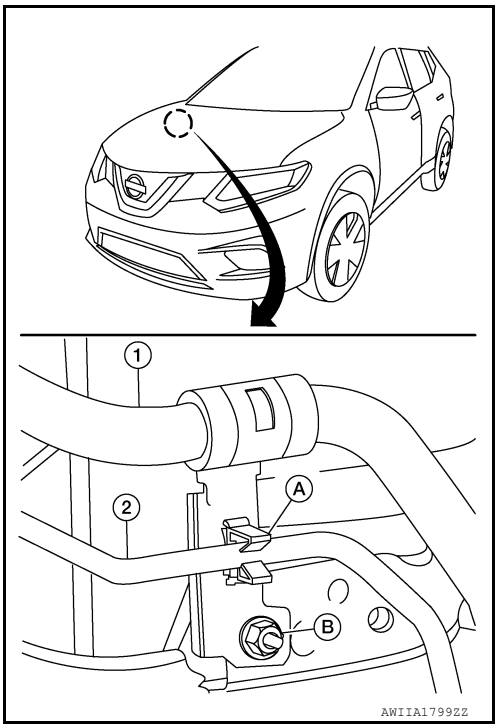

6. Remove bolt (A) that retains high-pressure pipe (1) to the condenser (2).
   CAUTION:
   Cap or wrap the joint of the pipe with suitable material such as vinyl tape to avoid the entry of air.

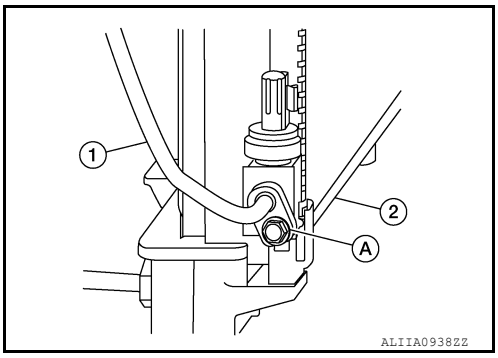

7. Remove the bolt (A) that retains the high-pressure and low-pressure pipe to the expansion valve (1).
CAUTION:
Cap or wrap the joint of the pipe with suitable material such as vinyl tape to avoid the entry of air.

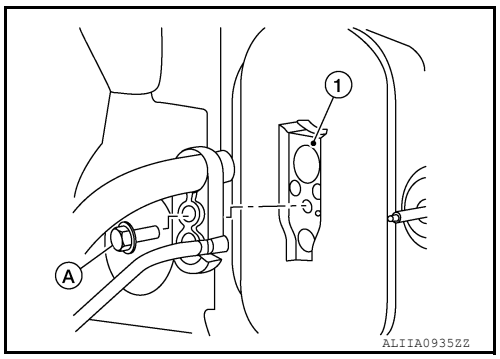

8. Remove high-pressure pipe.

INSTALLATION

Installation is in the reverse order of removal.

CAUTION:
- **Tighten bolts to specified torque. Refer to HA-31, "Exploded View".**
- **Do not reuse O-rings.**
- **Apply A/C oil to new O-rings for installation.**
- **After charging the refrigerant, check for leaks. Refer to HA-21, "Leak Test".**

HIGH-PRESSURE FLEXIBLE HOSE

HIGH-PRESSURE FLEXIBLE HOSE : Removal and Installation

INFOID:0000000011279497

REMOVAL

1. Discharge the refrigerant. Refer to HA-22, "Recycle Refrigerant".
2. Remove front bumper fascia. Refer to EXT-17, "Removal and Installation".
3. Remove the bolt (A) that retains the high-pressure flexible hose (2) to the condenser (1).
CAUTION:
Cap or wrap the joint of the pipe with suitable material such as vinyl tape to avoid the entry of air.

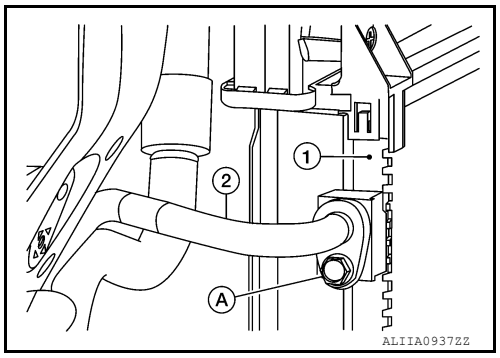

4. Remove the bolt (A) that retains the high-pressure flexible hose (2) to the compressor (1).
CAUTION:
Cap or wrap the joint of the pipe with suitable material such as vinyl tape to avoid the entry of air.

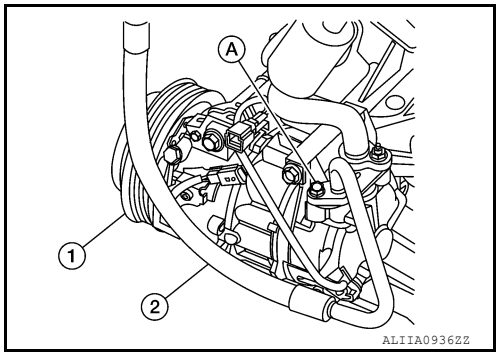

INSTALLATION

Installation is in the reverse order of removal.

CAUTION:

- **Tighten bolts to specified torque. Refer to HA-37, "Exploded View".**
- **Do not reuse O-rings.**
- **Apply A/C oil to new O-rings for installation.**
- **After charging the refrigerant, check for leaks. Refer to HA-21, "Leak Test".**

CONDENSER

Exploded View

INFOID:0000000011279498

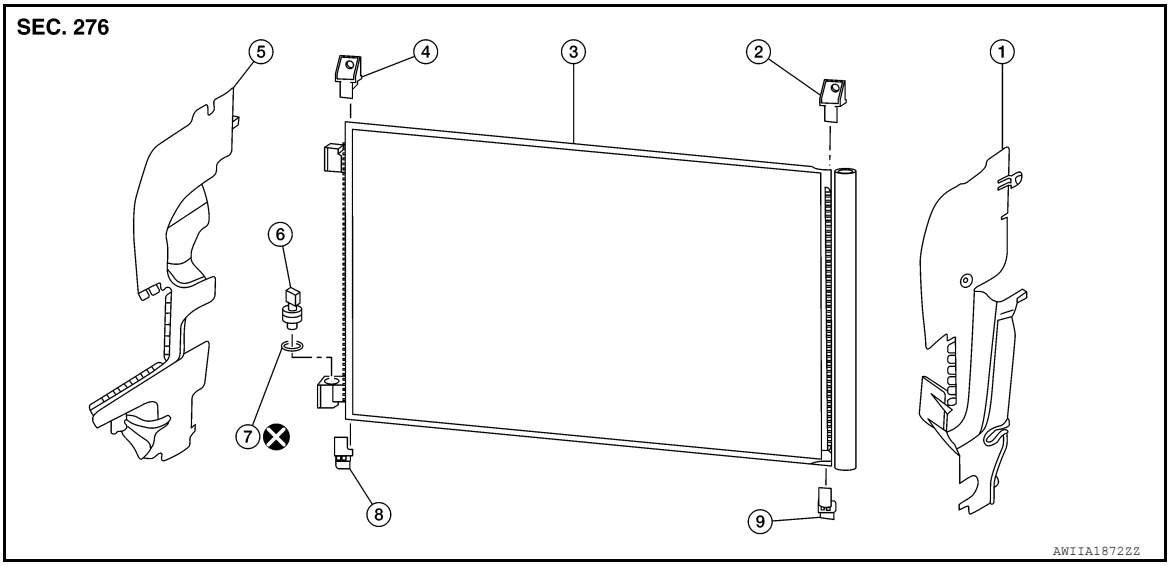

1. Air guide (LH)	2. Condenser upper bracket (LH)	3. Condenser (includes liquid tank)
4. Condenser upper bracket (RH)	5. Air guide (RH)	6. Refrigerant pressure sensor
7. O-ring	8. Condenser lower bracket (RH)	9. Condenser lower bracket (LH)

CONDENSER

CONDENSER : Removal and Installation

INFOID:0000000011279499

REMOVAL

CAUTION:

Before servicing, turn the ignition switch off, disconnect both battery cables and wait at least three minutes.

1. Disconnect the negative and positive battle terminals and wait at least three minutes. Refer to PG-78, "Removal and Installation (Battery)".
2. Discharge the refrigerant. Refer to HA-22, "Recycle Refrigerant".
3. Remove front air duct. Refer to EM-26, "Removal and Installation".
4. Remove front bumper fascia. Refer to EXT-17, "Removal and Installation".
5. Remove front combination lamp (RH). Refer to EXL-119, "Removal and Installation".
6. Remove air guides (LH/RH). Refer to HA-37, "Exploded View".
7. Remove crash zone sensor. Refer to SR-22, "Removal and Installation".
8. Disconnect the harness connector from the refrigerant pressure sensor.
9. Remove the bolt (A) that retains the high-pressure flexible hose (2) to the condenser (1).

   CAUTION:

   Cap or wrap the joint of the pipe with suitable material such as vinyl tape to avoid the entry of air.

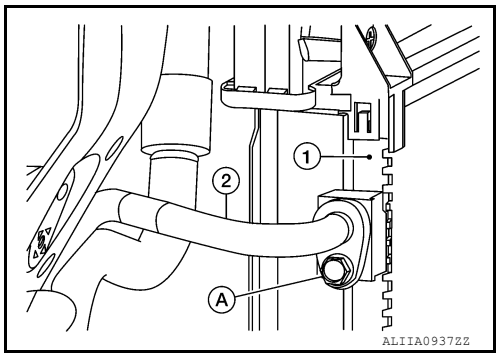

10. Remove bolt (A) that retains high-pressure pipe (1) to condenser (2).

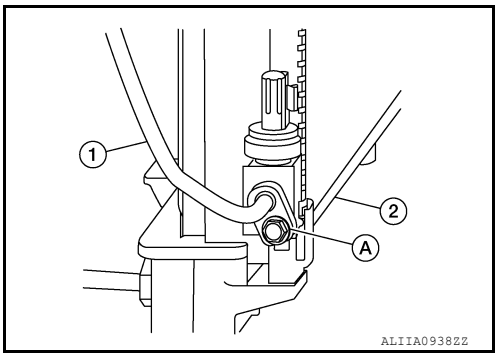

11. Remove the condenser bracket bolts and condenser.

INSTALLATION

Installation is in the reverse order of removal.

CAUTION:

- **Tighten bolts to specification. Refer to HA-31, "Exploded View".**
- **Do not reuse O-rings.**
- **Apply A/C oil to new O-rings for installation.**
- **After charging the refrigerant, check for leaks. Refer to HA-21, "Leak Test".**

LIQUID TANK

LIQUID TANK : Removal and Installation

INFOID:0000000011279500

The liquid tank is serviced as an assembly with the condenser. Refer to HA-37, "CONDENSER : Removal and Installation".

REFRIGERANT PRESSURE SENSOR

REFRIGERANT PRESSURE SENSOR : Removal and Installation

INFOID:0000000011279501

REMOVAL

1. Discharge the refrigerant. Refer to HA-22, "Recycle Refrigerant".
2. Remove front air duct. Refer to EM-26, "Removal and Installation".
3. Remove front bumper fascia. Refer to EXT-17, "Removal and Installation".
4. Remove air guide (RH). Refer to HA-37, "Exploded View".
5. Disconnect the harness connector from the refrigerant pressure sensor and remove.
   CAUTION:
   Cap or wrap the opening of the refrigerant pressure sensor with suitable material such as vinyl tape to avoid the entry of air.

INSTALLATION

Installation is in the reverse order of removal.

CAUTION:

- **Do not reuse O-ring.**
- **Apply A/C oil to new O-rings for installation.**
- **After charging the refrigerant, check for leaks. Refer to HA-21, "Leak Test".**

HEATING AND COOLING UNIT ASSEMBLY

Exploded View

INFOID:0000000011279502

Steering Member

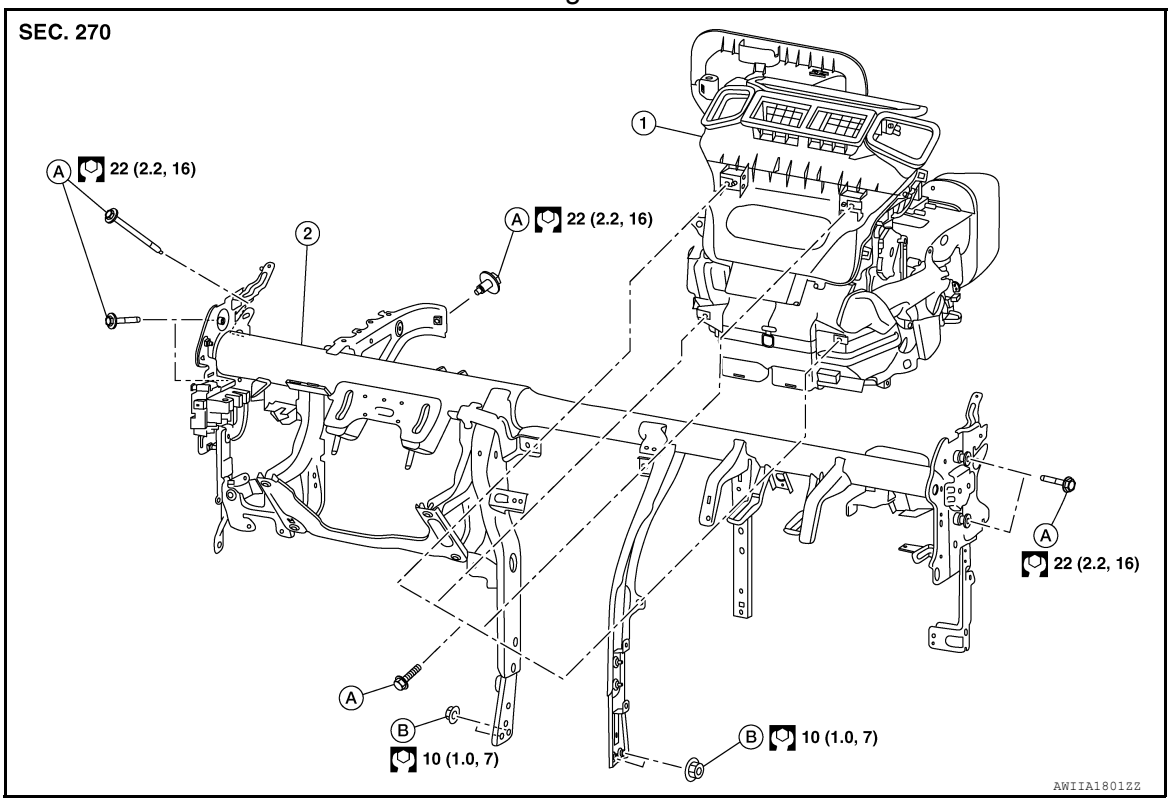

1. Heating and cooling unit assembly
2. Steering member
A. Bolt
B. Nut

Automatic Air Conditioning

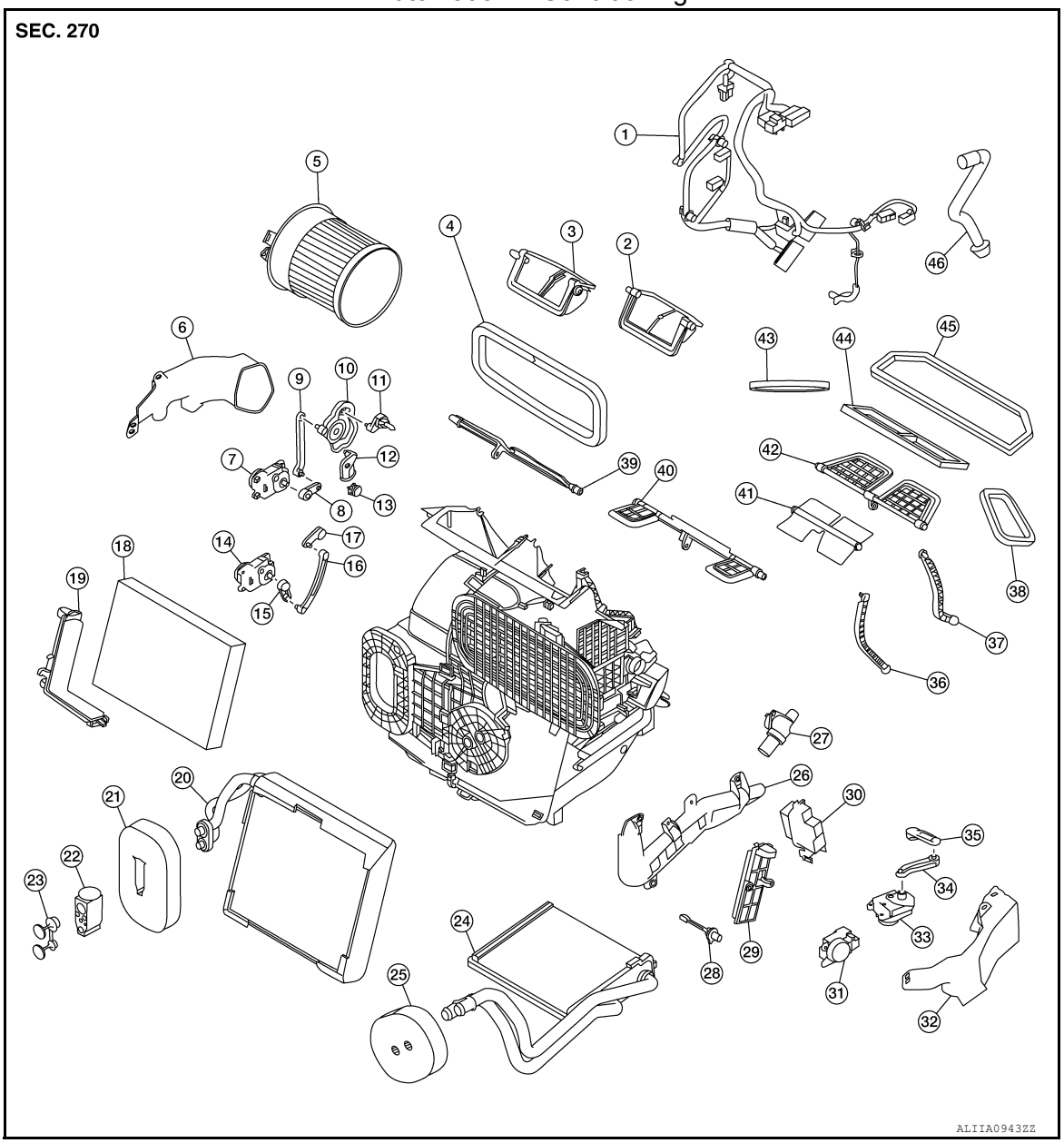

1. Wiring harness
2. Air mix door duct (LH)
3. Air mix door duct (RH)
4. Intake housing gasket
5. Blower motor
6. Front foot duct (RH)
7. Mode door motor
8. Mode door motor link
9. Mode door motor link 2
10. Mode door motor main link
11. Rear foot door lever
12. Front foot door link
13. Front foot door lever
14. Air mix door motor (RH)
15. Air mix door motor link (RH)
16. Air mix door motor link 2 (RH)
17. Air mix door lever (RH)
18. In-cabin microfilter
19. In-cabin microfilter cover
20. Evaporator
21. Evaporator grommet
22. Expansion valve
23. Expansion valve plug
24. Heater core
25. Heater core grommet
26. Heater core pipe cover
27. Aspirator
28. Intake sensor
29. Inspection cover
30. Variable blower control
31. Air mix door motor (LH)
32. Front foot duct (LH)
33. Intake door motor
34. Intake door motor link
35. Intake door lever
36. Internal door linkage 1
37. Internal door linkage 2
38. Side ventilator duct gasket (LH)
39. Rear foot door
40. Front foot door
41. Center ventilator door
42. Defroster door
43. Side ventilator duct gasket (RH)
44. Center ventilator duct gasket
45. Defroster duct gasket
46. Drain hose

Manual Air Conditioning

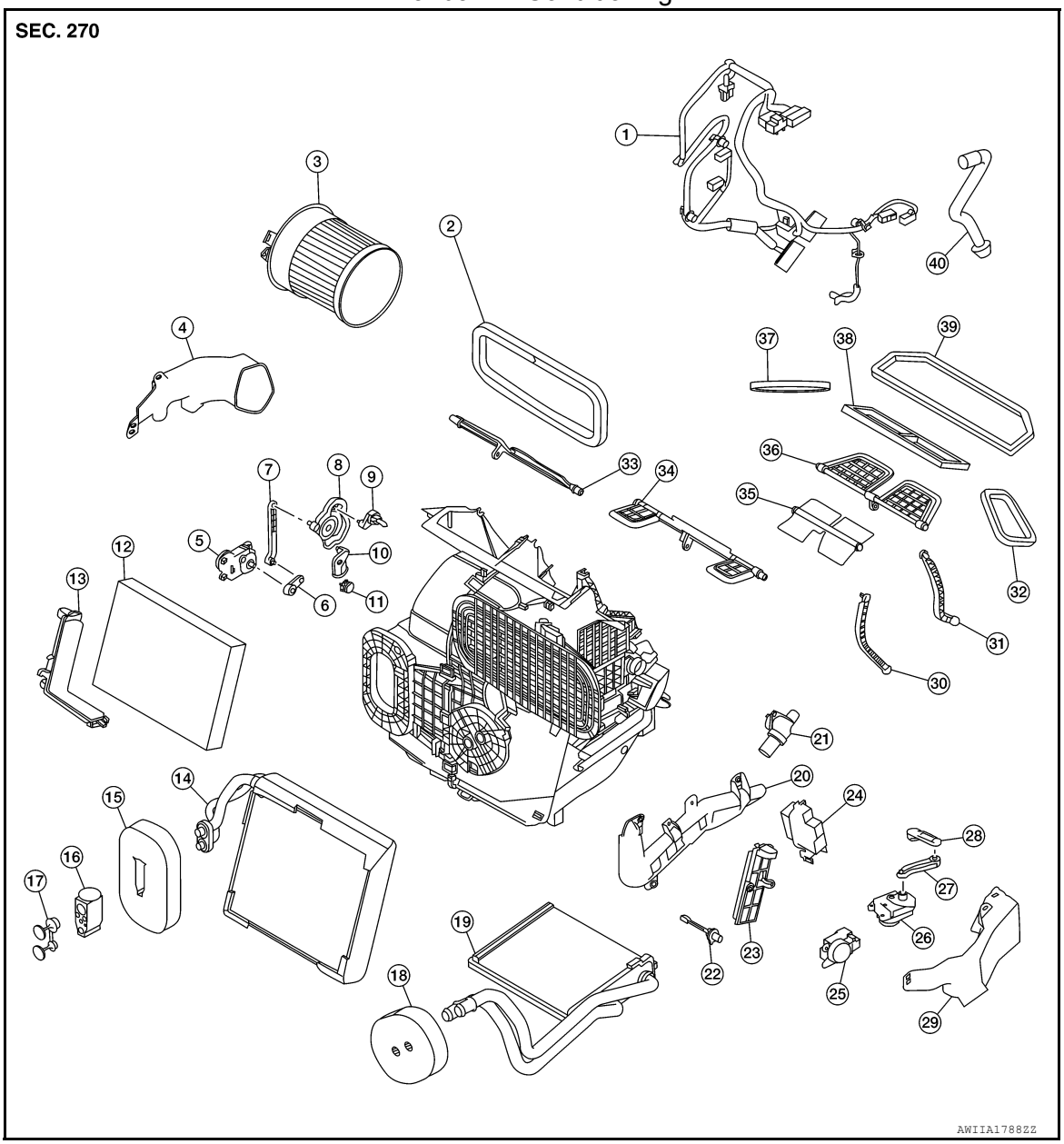

1. Wiring harness
2. Intake housing gasket
3. Blower motor
4. Front foot duct
5. Mode door motor
6. Mode door motor link
7. Mode door motor link 2
8. Mode door motor main link
9. Rear foot door lever
10. Front foot door link
11. Front foot door lever
12. In-cabin microfilter
13. In-cabin microfilter cover
14. Evaporator
15. Evaporator grommet
16. Expansion valve
17. Expansion valve plug
18. Heater core grommet
19. Heater core
20. Heater core pipe cover
21. Aspirator
22. Intake sensor
23. Inspection cover
24. Variable blower control
25. Air mix door motor
26. Intake door motor
27. Intake door motor link
28. Intake door lever
29. Front foot duct (LH)
30. Internal door linkage 1
31. Internal door linkage 2
32. Side ventilator duct gasket (LH)
33. Rear foot door
34. Front foot door
35. Center ventilator door
36. Defroster door
37. Side ventilator duct gasket (RH)
38. Center ventilator duct gasket
39. Defroster duct gasket
40. Drain hose

HEATING AND COOLING UNIT ASSEMBLY

HEATING AND COOLING UNIT ASSEMBLY : Removal and Installation

INFOID:0000000011279503

REMOVAL

CAUTION:

Before servicing, turn the ignition switch off, disconnect both battery cables and wait at least three minutes.

NOTE:

When removing components such as hoses, lines/tubes, etc., cap or plug openings to prevent fluid from leaking.

1. Disconnect the negative and positive battery terminals and wait at least three minutes. Refer to PG-78, "Removal and Installation (Battery)".
2. Discharge the refrigerant. Refer to HA-22, "Recycle Refrigerant".
3. Drain the engine coolant. Refer to CO-8, "Draining".
4. Remove instrument panel assembly. Refer to IP-14, "INSTRUMENT PANEL ASSEMBLY : Removal and Installation".
5. Remove steering column. Refer to ST-12, "Removal and Installation".
6. Remove dash side finishers (LH/RH). Refer to INT-24, "DASH SIDE FINISHER : Removal and Installation".
7. Remove front floor connecting ducts (LH/RH). Refer to VTL-10, "FRONT FLOOR DUCT : Removal and Installation - Front Floor Connecting Duct".
8. Remove the cowl top extension. Refer to EXT-25, "Removal and Installation".
9. Remove the bolt (A) that retains the low-pressure pipe and high-pressure pipe to the expansion valve (1).

   CAUTION:

   Cap or wrap the joint of the pipe with suitable material such as vinyl tape to avoid the entry of air.

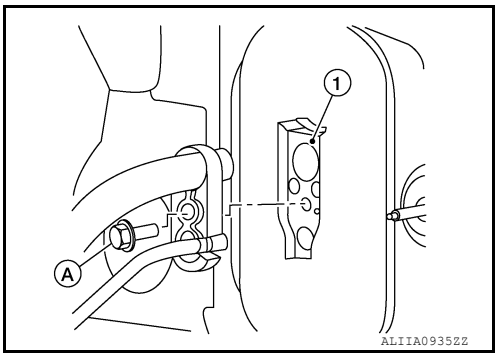

10. Disconnect the heater hoses from the heater core.
11. Remove the nuts and bolts that retain the steering member to the vehicle body.
12. Disconnect the drain hose from the heating and cooling unit assembly.
13. Disconnect the harness connectors from the heating and cooling unit assembly and steering member.
14. Remove the heating and cooling unit assembly and steering member from the vehicle as an assembly.

    CAUTION:

    Use care not to damage the seats when removing the steering member.
15. Remove the bolts that retain the heating and cooling unit assembly to the steering member.
16. Separate the heating and cooling unit assembly from the steering member.

INSTALLATION

Installation is in the reverse order of removal.

CAUTION:

- **Do not reuse O-rings.**
- **Apply A/C oil to new O-rings for installation.**
- **After charging refrigerant, check for leaks. Refer to HA-21, "Leak Test".**

HEATER CORE

HEATER CORE : Exploded View

INFOID:0000000011279504

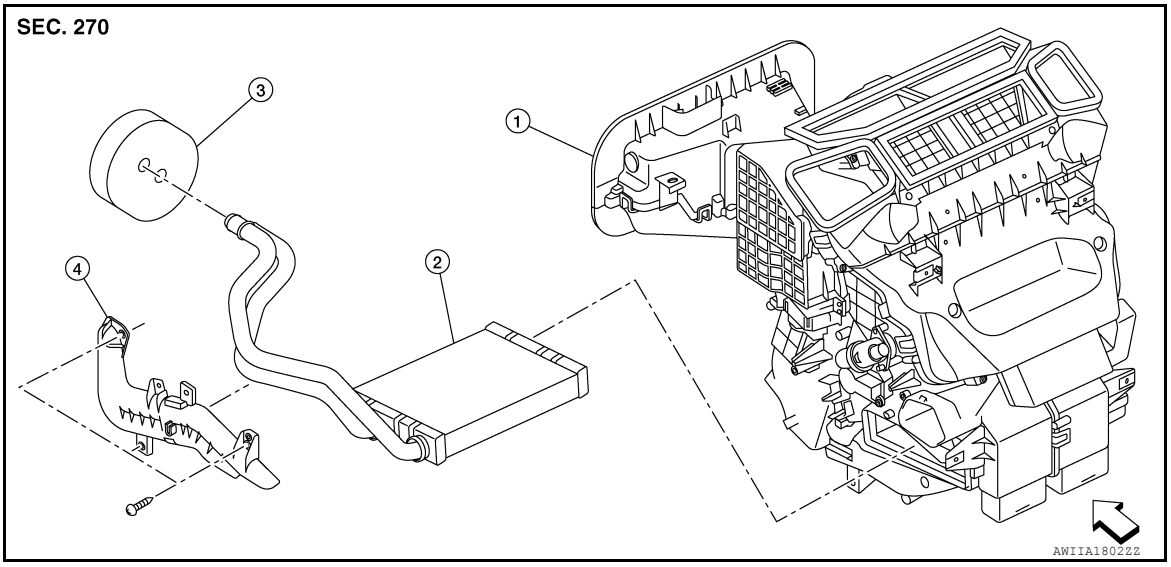

1. Heating and cooling unit assembly
2. Heater core
3. Heater core grommet
4. Heater core pipe cover
⇦ Front

HEATER CORE : Removal and Installation

INFOID:0000000011279505

REMOVAL

NOTE:
When removing components such as hoses, lines/tubes, etc., cap or plug openings to prevent fluid from spilling.

1. Discharge the refrigerant. Refer to HA-22, "Recycle Refrigerant".
2. Drain the engine coolant. Refer to CO-8, "Draining".
3. Remove heating and cooling unit assembly. Refer to HA-42, "HEATING AND COOLING UNIT ASSEMBLY : Removal and Installation".
4. Remove front foot duct (LH). Refer to VTL-10, "FRONT FOOT DUCT : Removal and Installation".
5. Remove screws and heater core pipe cover. Refer to HA-39, "Exploded View".
6. Remove heater core.

INSTALLATION

Installation is in the reverse order of removal.

EVAPORATOR

EVAPORATOR : Exploded View

INFOID:0000000011279506

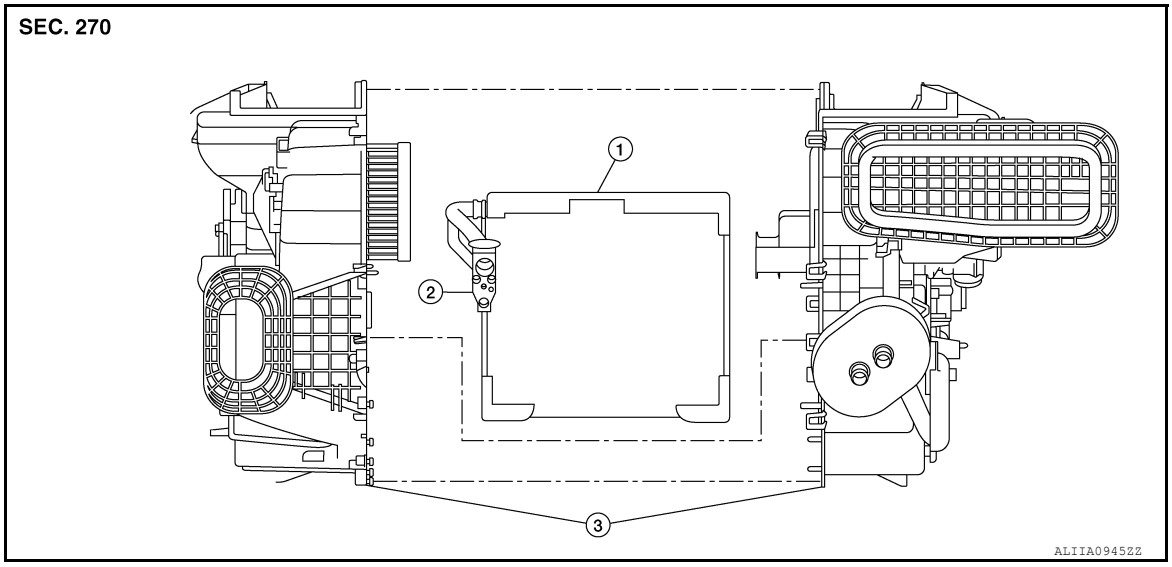

1. Evaporator
2. Expansion valve
3. Heating and cooling unit assembly

EVAPORATOR : Removal and Installation

INFOID:0000000011279507

REMOVAL

1. Discharge the refrigerant. Refer to HA-22, "Recycle Refrigerant".
2. Remove front foot duct (LH). Refer to VTL-10, "FRONT FOOT DUCT : Removal and Installation".
3. Remove heater core. Refer to HA-43, "HEATER CORE : Removal and Installation".
4. Remove intake door motor. Refer to HAC-110, "INTAKE DOOR MOTOR : Removal and Installation" (AUTOMATIC AIR CONDITIONING) or HAC-186, "INTAKE DOOR MOTOR : Removal and Installation" (MANUAL AIR CONDITIONING).
5. Remove air mix door motor (LH) (AUTOMATIC AIR CONDITONING). Refer to HAC-110, "AIR MIX DOOR MOTOR : Removal and Installation".
6. Remove air mix door motor (MANUAL AIR CONDITIONING). Refer to HAC-186, "AIR MIX DOOR MOTOR : Removal and Installation".
7. Separate the heating and cooling unit assembly and remove evaporator.

INSTALLATION

Installation is in the reverse order of removal.

CAUTION:

- **Do not reuse O-rings.**
- **Apply A/C oil to new O-rings for installation.**
- **After charging the refrigerant, check for leaks. Refer to HA-21, "Leak Test".**

EXPANSION VALVE

EXPANSION VALVE : Removal and Installation

INFOID:0000000011279508

REMOVAL

1. Discharge the refrigerant. Refer to HA-22, "Recycle Refrigerant".
2. Remove cowl top extension. Refer to EXT-25, "Removal and Installation".

3. Remove the bolt (A) that retains the low-pressure pipe and high-pressure pipe to the expansion valve (1).
CAUTION:
Cap or wrap the joint of the pipe with suitable material such as vinyl tape to avoid the entry of air.

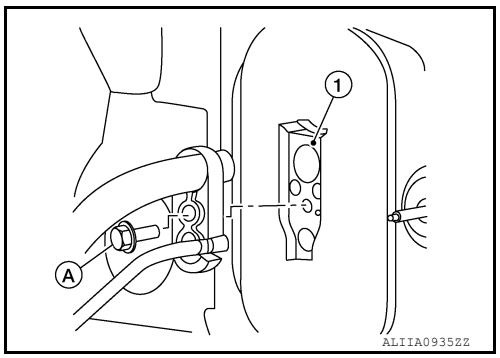

4. Remove bolts (A) and expansion valve (1).

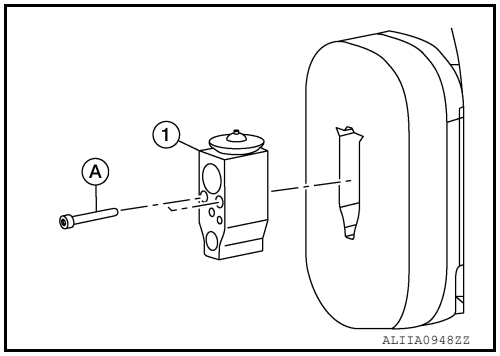

INSTALLATION

Installation is in the reverse order of removal.

CAUTION:

- **Tighten bolts to specification. Refer to HA-31, "Exploded View".**
- **Do not reuse O-rings.**
- **Apply A/C oil to new O-rings for installation.**
- **After charging refrigerant, check for leaks. Refer to HA-21, "Leak Test".**

SERVICE DATA AND SPECIFICATIONS (SDS)

SERVICE DATA AND SPECIFICATIONS (SDS)

Compressor

INFOID:0000000011279509

Model		DENSO
Type		Variable displacement swash plate
Displacement		140.6 cm^3 (8.6 cu in)/rev
Number of cylinders		6
Cylinder bore diameter x stroke mm (in)		32 x 29.1 mm (1.3 x 1.1 in)
Direction of rotation		Clockwise (viewed from clutch)
Drive belt		Poly V 6 grooves
Disc to pulley clearance	Standard	0.21 – 0.55 mm (0.008 – 0.022 in)

Oil

INFOID:0000000011279510

Name		ND-OIL8
Capacity m ℓ (US fl oz, Imp fl oz)	Total in system	110 (3.7, 3.9)
	Compressor (service part) charging amount	Refer to HA-25, "Oil Adjusting Procedure for Compressor Replacement".

Refrigerant

INFOID:0000000011279511

Type	HFC-134a (R-134a)
Capacity	0.50 kg (1.10 lbs)