SECTION CHG
CHARGING SYSTEM

CONTENTS

PRECAUTION

PRECAUTIONS

Precaution for Supplemental Restraint System (SRS) "AIR BAG" and "SEAT BELT PRE-TENSIONER"

INFOID:0000000012422858

The Supplemental Restraint System such as “AIR BAG” and “SEAT BELT PRE-TENSIONER”, used along with a front seat belt, helps to reduce the risk or severity of injury to the driver and front passenger for certain types of collision. Information necessary to service the system safely is included in the SR and SB section of this Service Manual.

WARNING:

- **To avoid rendering the SRS inoperative, which could increase the risk of personal injury or death in the event of a collision which would result in air bag inflation, all maintenance must be performed by an authorized NISSAN/INFINITI dealer.**
- **Improper maintenance, including incorrect removal and installation of the SRS, can lead to personal injury caused by unintentional activation of the system. For removal of Spiral Cable and Air Bag Module, see the SR section.**
- **Do not use electrical test equipment on any circuit related to the SRS unless instructed to in this Service Manual. SRS wiring harnesses can be identified by yellow and/or orange harnesses or harness connectors.**

PRECAUTIONS WHEN USING POWER TOOLS (AIR OR ELECTRIC) AND HAMMERS

WARNING:

- **When working near the Airbag Diagnosis Sensor Unit or other Airbag System sensors with the Ignition ON or engine running, DO NOT use air or electric power tools or strike near the sensor(s) with a hammer. Heavy vibration could activate the sensor(s) and deploy the air bag(s), possibly causing serious injury.**
- **When using air or electric power tools or hammers, always switch the Ignition OFF, disconnect the battery and wait at least three minutes before performing any service.**

PREPARATION

PREPARATION

Special Service Tools

INFOID:0000000012422859

The actual shape of the tools may differ from those illustrated here.

Tool number (TechMate No.) Tool name		Description
— (165-GR8-1200KIT-NI) Nissan battery and electronics tester	 AWIIA1239ZZ	Testing batteries, starting and charging systems and charges batteries. For operating instructions, refer to diagnostic station instruction manual.
— (165-EXP-800 NI) Midtronic hand-held battery tester	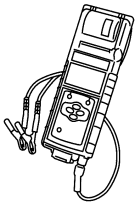 JSMIA0806ZZ	Testing batteries and charging systems. For operating instructions, refer to diagnostic analyzer instruction manual.

Commercial Service Tools

INFOID:0000000012422860

Tool name		Description
Power tool	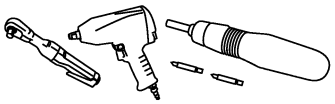 PIIB1407E	Loosening bolts, nuts and screws

SYSTEM DESCRIPTION

COMPONENT PARTS

Component Parts Location

INFOID:0000000012422861

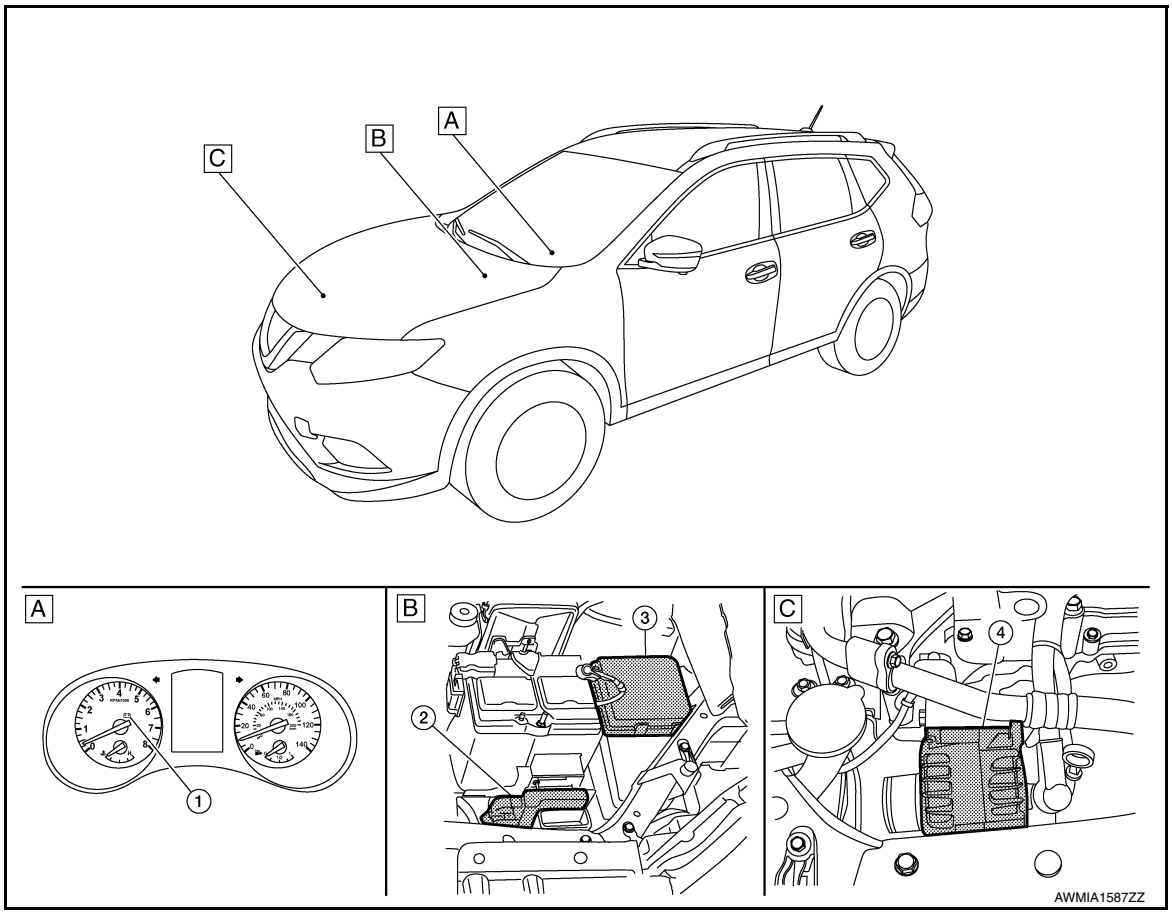

A. Combination meter B. Engine room right side C. Engine room left side

No.	Component part	Description
1.	Combination meter (Charge warning lamp)	The IC regulator warning function activates to illuminate the charge warning lamp if any of the following symptoms occur while generator is operating: • Excessive voltage is produced • No voltage is produced
2.	ECM	The ECM transmits the generator voltage request signal received from the IPDM E/R to the generator via LIN communication signal.
3.	IPDM E/R	The IPDM E/R sends the generator voltage request signal to the ECM via CAN communication.
4.	Generator (IC voltage regulator)	IC voltage regulator controls the generator voltage based on the received signal. When there is no command signal, the generator performs the normal power generation according to the characteristic of the IC voltage regulator.

SYSTEM

CHARGING SYSTEM

CHARGING SYSTEM : System Description

INFOID:0000000012422862

The generator provides DC voltage to operate the vehicle's electrical system and to keep the battery charged. The voltage output is controlled by the IC regulator.
The generator includes a self-diagnosis function and transmits a diagnosis signal to the ECM via LIN communication when detecting a malfunction.

SYSTEM DIAGRAM

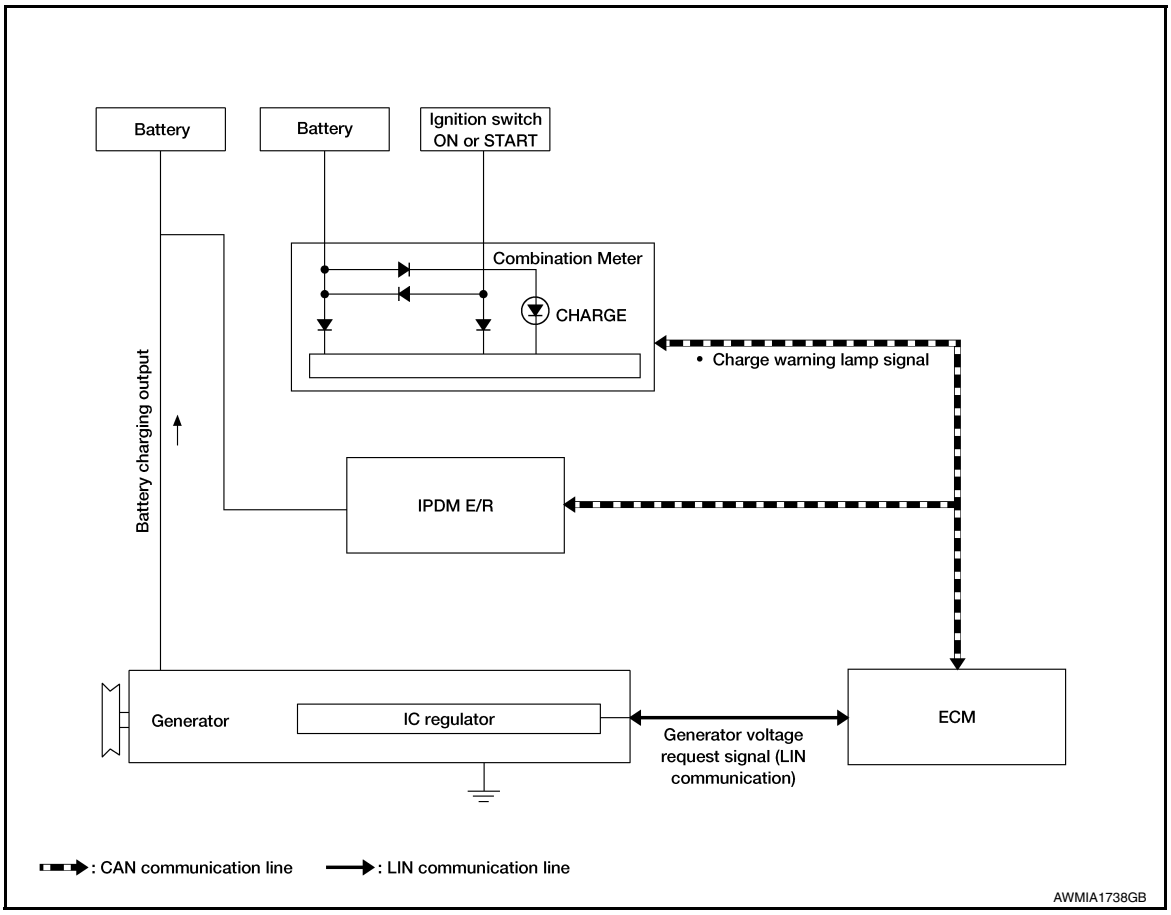

WIRING DIAGRAM

CHARGING SYSTEM

Wiring Diagram

INFOID:0000000012422863

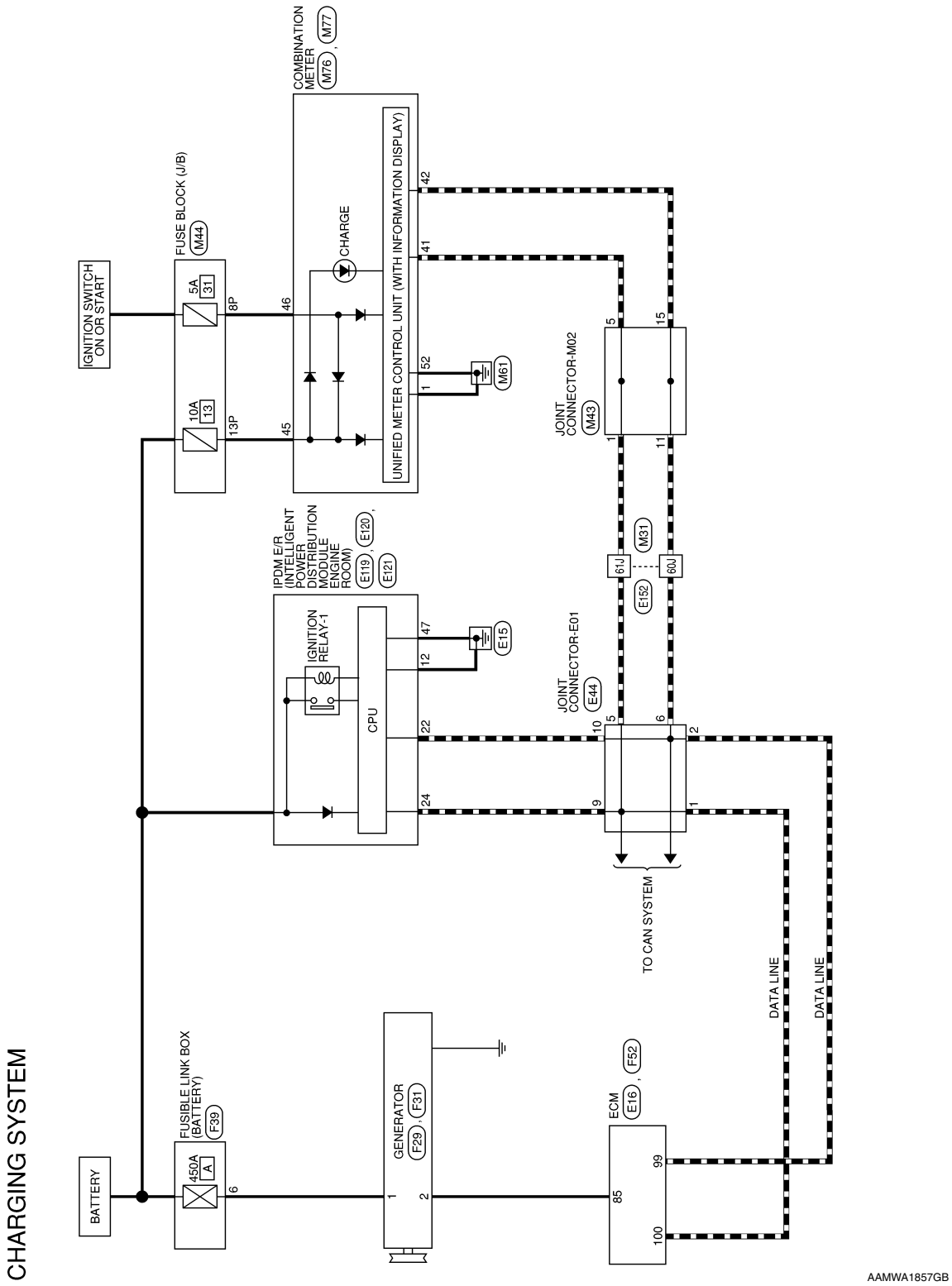

CHARGING SYSTEM CONNECTORS

Connector No.	M31
Connector Name	WIRE TO WIRE
Connector Color	WHITE

H.S.

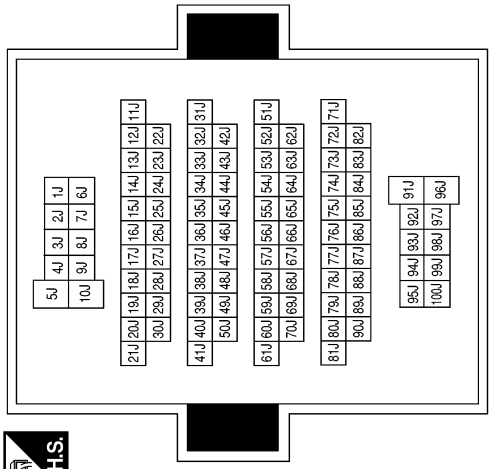

Terminal No.	Color of Wire	Signal Name
60J	P	–
61J	L	–

Connector No.	M43
Connector Name	JOINT CONNECTOR-M02
Connector Color	BLUE

H.S.

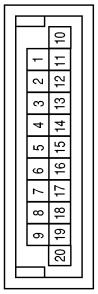

Terminal No.	Color of Wire	Signal Name
1	L	–
5	L	–
11	P	–
15	P	–

Connector No.	M44
Connector Name	FUSE BLOCK (J/B)
Connector Color	WHITE

H.S.

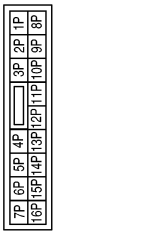

Terminal No.	Color of Wire	Signal Name
8P	LA/BR	–
13P	LA/G	–

Connector No.	M76
Connector Name	COMBINATION METER
Connector Color	WHITE

H.S.

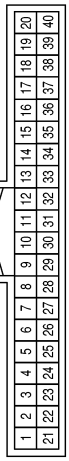

Terminal No.	Color of Wire	Signal Name
1	B	GND

Connector No.	M77
Connector Name	COMBINATION METER
Connector Color	WHITE

H.S.

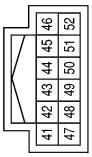

Terminal No.	Color of Wire	Signal Name
41	L	CAN-H
42	P	CAN-L
45	LA/G	BAT
46	LA/BR	IGN
52	B	G1

AAMIA3600GB

Connector No.	E16
Connector Name	ECM
Connector Color	BLACK

H.S.

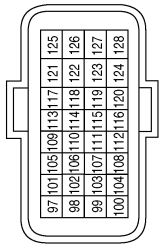

Terminal No.	Color of Wire	Signal Name
99	P	CAN-L
100	L	CAN-H

Connector No.	E44
Connector Name	JOINT CONNECTOR-E01
Connector Color	WHITE

H.S.

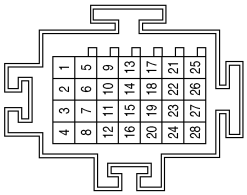

Terminal No.	Color of Wire	Signal Name
1	L	–
2	P	–
5	L	–
6	P	–
9	L	–
10	P	–

Connector No.	E119
Connector Name	IPDM E/R (INTELLIGENT POWER DISTRIBUTION MODULE ENGINE ROOM)
Connector Color	GRAY

H.S.

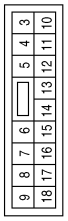

Terminal No.	Color of Wire	Signal Name
12	B	SIGNAL GROUND

Connector No.	E120
Connector Name	IPDM E/R (INTELLIGENT POWER DISTRIBUTION MODULE ENGINE ROOM)
Connector Color	GRAY

H.S.

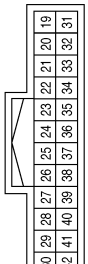

Terminal No.	Color of Wire	Signal Name
22	P	CAN-L
24	L	CAN-H

Connector No.	E121
Connector Name	IPDM E/R (INTELLIGENT POWER DISTRIBUTION MODULE ENGINE ROOM)
Connector Color	RED

H.S.

Terminal No.	Color of Wire	Signal Name
47	B	POWER GROUND

AAMIA2106GB

Connector No.	E152
Connector Name	WIRE TO WIRE
Connector Color	WHITE

H.S.

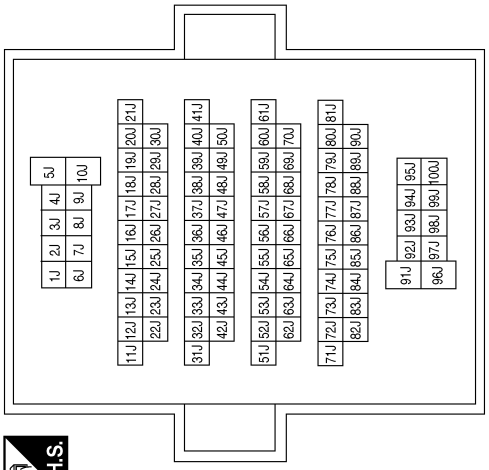

Terminal No.	Color of Wire	Signal Name
60J	P	–
61J	L	–

Connector No.	F29
Connector Name	GENERATOR
Connector Color	–

H.S.

Terminal No.	Color of Wire	Signal Name
1	B/R	–

Connector No.	F31
Connector Name	GENERATOR
Connector Color	BLACK

H.S.

Terminal No.	Color of Wire	Signal Name
2	G	–

Connector No.	F39
Connector Name	FUSIBLE LINK BOX (BATTERY)
Connector Color	–

H.S.

Terminal No.	Color of Wire	Signal Name
6	B/R	–

Connector No.	F52
Connector Name	ECM
Connector Color	BROWN

H.S.

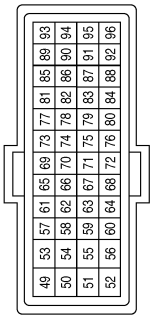

Terminal No.	Color of Wire	Signal Name
85	G	LIN

AAMIA2846GB

BASIC INSPECTION

DIAGNOSIS AND REPAIR WORKFLOW

Work Flow (With EXP-800 NI or GR8-1200 NI)

INFOID:0000000012422864

CHARGING SYSTEM DIAGNOSIS WITH EXP-800 NI OR GR8-1200 NI

To test the charging system, use the following special service tools:

- EXP-800 NI Battery and electrical diagnostic analyzer
- GR8-1200 NI Multitasking battery and electrical diagnostic station

NOTE:

Refer to the applicable Instruction Manual for proper charging system diagnosis procedures.

OVERALL SEQUENCE

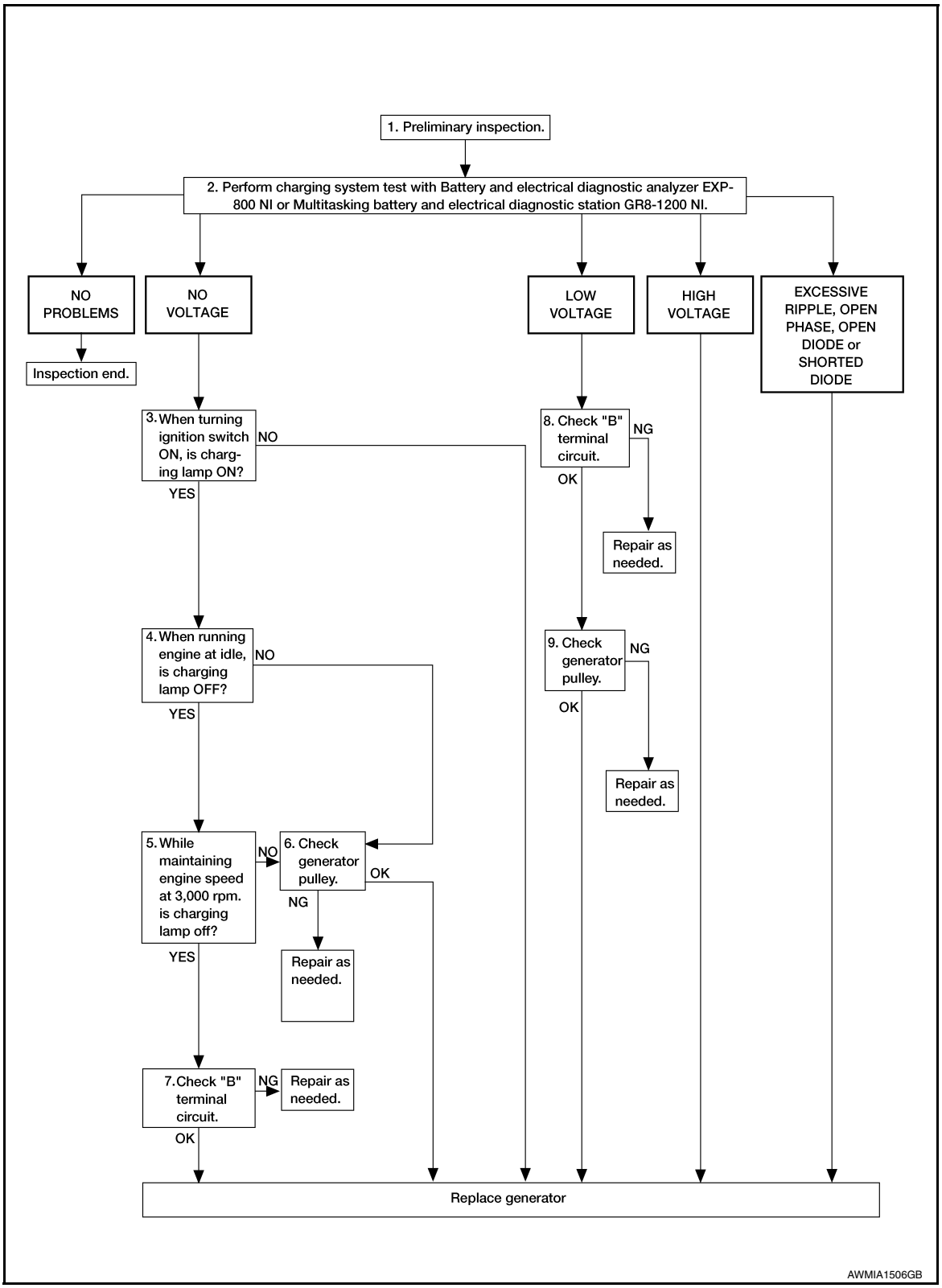

DETAILED FLOW

NOTE:

To ensure a complete and thorough diagnosis, the battery, stater and generator test segments must be done as a set from start to finish.

1. PRELIMINARY INSPECTION

Perform the preliminary inspection. Refer to CHG-15, "Diagnosis Procedure".

>> GO TO 2.

2. DIAGNOSIS WITH EXP-800 NI OR GR8-1200 NI

Perform the charging system test using Multitasking battery and electrical diagnostic station GR8-1200 NI or Battery and electrical diagnostic analyzer EXP-800 NI. Refer to the applicable Instruction Manual for proper testing procedures.

Test result

NO PROBLEMS>>Charging system is normal and will also show “DIODE RIPPLE” test result.
NO VOLTAGE>>GO TO 3.
LOW VOLTAGE>>GO TO 10.
HIGH VOLTAGE>>Replace generator. Refer to CHG-18, "Removal and Installation".
EXCESSIVE RIPPLE, OPEN PHASE, OPEN DIODE or SHORTED DIODE>>Replace the generator. Refer to CHG-18, "Removal and Installation". Perform “DIODE RIPPLE” test again using Multitasking battery and electrical diagnostic station GR8-1200 NI or Battery and electrical diagnostic analyzer EXP-800 NI to confirm repair.

3. INSPECTION WITH CHARGE WARNING LAMP (IGNITION SWITCH IS ON)

Turn the ignition switch ON.

Does the charge warning lamp illuminate?

YES >> GO TO 4.
NO >> Replace generator. Refer to CHG-18, "Removal and Installation".

4. INSPECTION WITH CHARGE WARNING LAMP (IDLING)

Start the engine and run it at idle.

Does the charge warning lamp turn OFF?

YES >> GO TO 5.
NO >> GO TO 6.

5. INSPECTION WITH CHARGE WARNING LAMP (ENGINE AT 3,000 RPM)

Increase and maintain the engine speed at 3,000 rpm.

Does the charge warning lamp remain off?

YES >> GO TO 7.
NO >> GO TO 6.

6. INSPECTION OF GENERATOR PULLEY

Check generator pulley. Refer to EM-15, "Checking".

Is generator pulley normal?

YES >> Replace generator. Refer to CHG-18, "Removal and Installation".
NO >> Repair as needed.

7. “B” TERMINAL CIRCUIT INSPECTION

Check “B” terminal circuit. Refer to CHG-16, "Diagnosis Procedure".

Is “B” terminal circuit normal?

YES >> Replace generator. Refer to CHG-18, "Removal and Installation".
NO >> Repair as needed.

8. “B” TERMINAL CIRCUIT INSPECTION

Check “B” terminal circuit. Refer to CHG-16, "Diagnosis Procedure".

Is “B” terminal circuit normal?

YES >> GO TO 9.
NO >> Repair as needed.

9. INSPECTION OF GENERATOR PULLEY

Check generator pulley. Refer to CHG-18, "Removal and Installation".

Is generator pulley normal?

YES >> Replace generator. Refer to CHG-18, "Removal and Installation".

NO >> Repair as needed.

Work Flow (Without EXP-800 NI or GR8-1200 NI)

INFOID:0000000012422865

OVERALL SEQUENCE

Before performing a generator test, make sure that the battery is fully charged. A 30-volt voltmeter and suitable test probes are necessary for the test.

- Before starting, inspect the fusible link.
- Use fully charged battery.

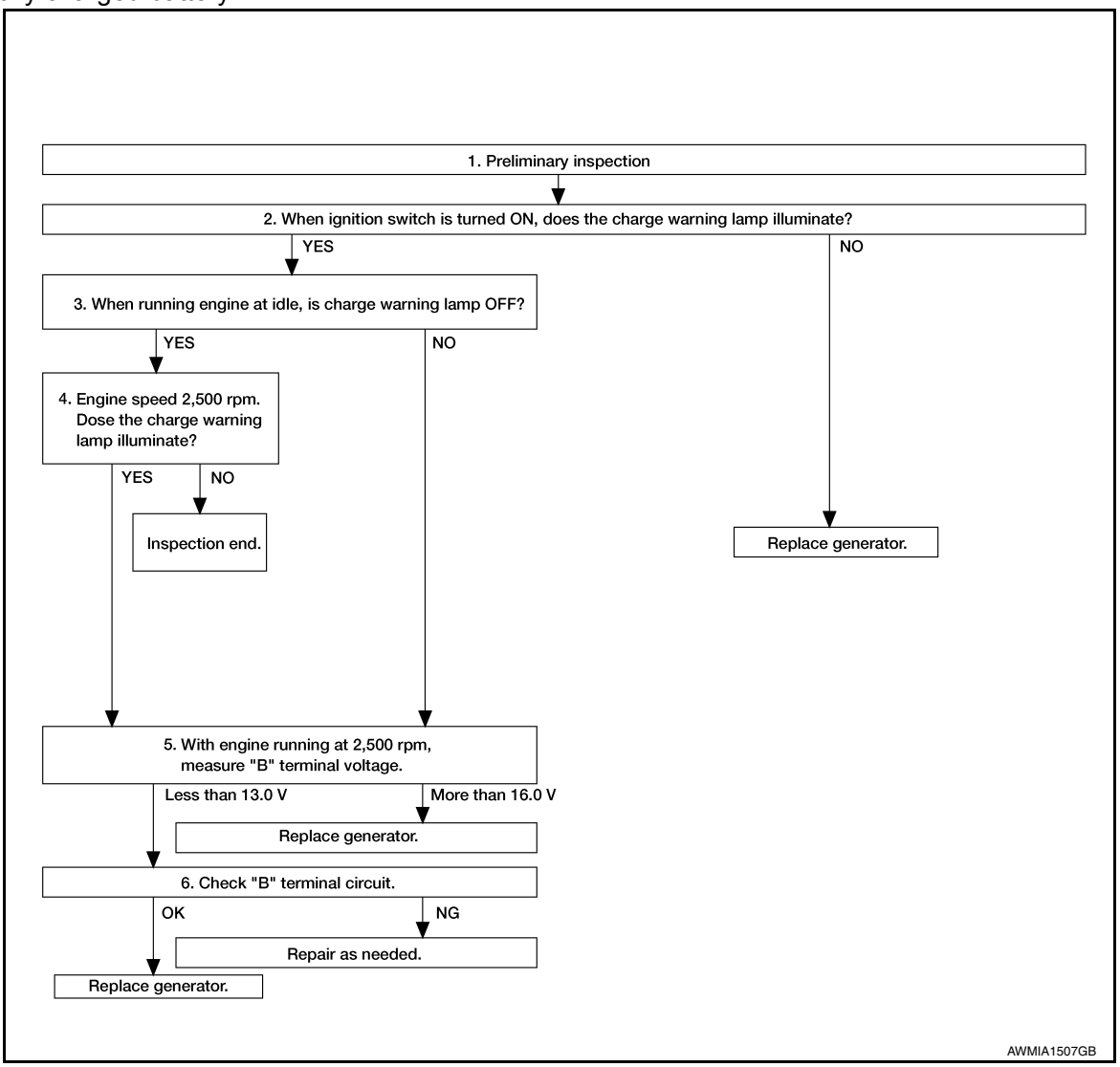

DETAILED FLOW

1. PRELIMINARY INSPECTION

Perform the preliminary inspection. Refer to CHG-15, "Diagnosis Procedure".

>> GO TO 2.

2. INSPECTION WITH CHARGE WARNING LAMP (IGNITION SWITCH IS TURNED ON)

When ignition switch is turned ON.

Does the charge warning lamp illuminate?

YES >> GO TO 3.
NO >> Replace generator. Refer to CHG-18, "Removal and Installation".

3. INSPECTION WITH CHARGE WARNING LAMP (IDLING)

Start the engine and run it at idle

Does the charge warning lamp turn OFF?

YES >> GO TO 4.
NO >> GO TO 5.

4. INSPECTION WITH CHARGE WARNING LAMP (ENGINE AT 2,500 RPM)

Increase and maintain the engine speed at 2,500 rpm.

Does the charge warning lamp illuminate?

YES >> GO TO 5.
NO >> Inspection End.

5. MEASURE “B” TERMINAL VOLTAGE

Start engine. With engine running at 2,500 rpm, measure “B” terminal voltage.

What voltage does the measurement result show?

Less than 13.0 V>>GO TO 6.
More than 16.0 V>>Replace generator. Refer to CHG-18, "Removal and Installation".

6. “B” TERMINAL CIRCUIT INSPECTION

Check “B” terminal circuit. Refer to CHG-16, "Diagnosis Procedure".

Is the inspection result normal?

YES >> Replace generator. Refer to CHG-18, "Removal and Installation".
NO >> Repair as needed.

DTC/CIRCUIT DIAGNOSIS

CHARGING SYSTEM PRELIMINARY INSPECTION

Diagnosis Procedure

INFOID:0000000012422866

1. CHECK BATTERY TERMINALS CONNECTION

Check if battery terminals are clean and tight.

Is the inspection result normal?

YES >> GO TO 2.
NO >> Repair battery terminal connection. Confirm repair by performing complete Charging system test using EXP-800 NI or GR8-1200 NI (if available). Refer to the applicable Instruction Manual for proper testing procedures.

2. CHECK FUSE

Check for blown fuse and fusible link:

Unit	Power source (Power supply terminals)	Fuse or Fusible Link
Generator	Battery (terminal 1)	Fusible Link **A**
Combination meter	Ignition switch ON	Fuse 31
	Battery	Fuse 13

Is the inspection result normal?

YES >> GO TO 3.
NO >> Replace the blown fuse or fusible link after repairing the affected circuit.

3. CHECK DRIVE BELT TENSION

Check drive belt tension. Refer to EM-15, "Tension Adjustment".

Is the inspection result normal?

YES >> Inspection End.
NO >> Repair as needed.

B TERMINAL CIRCUIT

Description

INFOID:0000000012422867

“B” terminal circuit supplies power to charge the battery and to operate the vehicles electrical system.

Diagnosis Procedure

INFOID:0000000012422868

Regarding Wiring Diagram information. Refer to CHG-6, "Wiring Diagram".

1.CHECK “B” TERMINAL CONNECTION

1. Turn ignition switch OFF.
2. Check if “B” terminal is clean and tight.

Is the inspection result normal?

YES >> GO TO 2.
NO >> Repair terminal “B” connection. Confirm repair by performing complete Charging system test using the EXP-800 NI or GR8-1200 NI (if available). Refer to applicable Instruction Manual for proper testing procedures.

2.CHECK “B” TERMINAL CIRCUIT

Check voltage between generator “B” terminal and ground.

(+)		(-)	Voltage (Approx.)
Generator			
Connector	Terminal		
F29	1	Ground	Battery voltage

Is the inspection result normal?

YES >> GO TO 3.
NO >> Check harness for open between generator and fusible link.

3.CHECK “B” TERMINAL CONNECTION (VOLTAGE DROP TEST)

1. Start engine, then engine running at idle and warm.
2. Check voltage between battery positive terminal and generator connector “B” terminal.

(+)		(-)	Voltage (Approx.)
Generator			
Connector	Terminal		
F29	1	Battery positive terminal	Less than 0.2V

Is the inspection result normal?

YES >> “B” terminal circuit is normal. Refer to CHG-10, "Work Flow (With EXP-800 NI or GR8-1200 NI)" or CHG-13, "Work Flow (Without EXP-800 NI or GR8-1200 NI)".
NO >> Check harness between battery and generator for continuity.

SYMPTOM DIAGNOSIS

CHARGING SYSTEM

Symptom Table

INFOID:0000000012422869

Symptom	Reference
Battery discharged	Refer to CHG-10, "Work Flow (With EXP-800 NI or GR8-1200 NI)" or CHG-13, "Work Flow (Without EXP-800 NI or GR8-1200 NI)".
The charge warning lamp does not illuminate when the ignition switch is set to ON.	
The charge warning lamp does not turn OFF after the engine starts.	
The charging warning lamp turns ON when increasing the engine speed.	

REMOVAL AND INSTALLATION

GENERATOR

Exploded View

INFOID:0000000012422870

REMOVAL

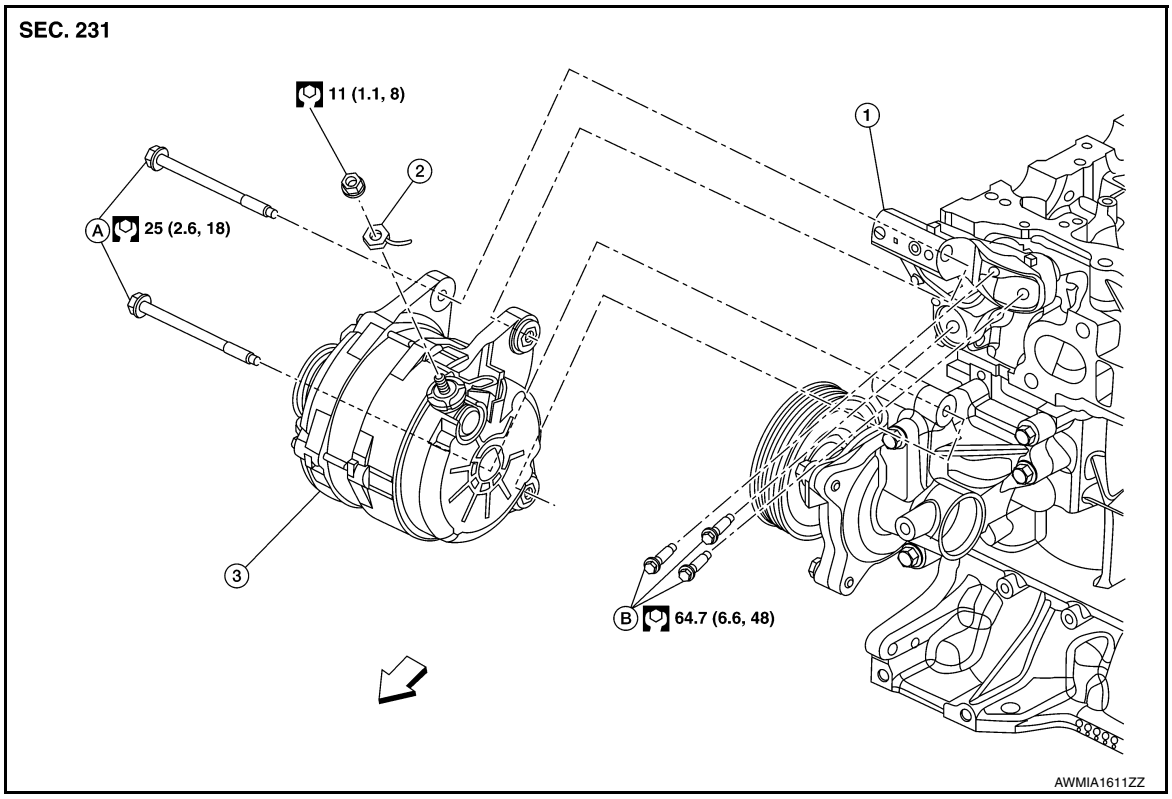

1.	Generator bracket	2.	"B" terminal harness	3.	Generator
A.	Refer to INSTALLATION	B.	Refer to INSTALLATION	⇦	Front

Removal and Installation

INFOID:0000000012422871

REMOVAL

1. Disconnect negative terminal from battery. Refer to PG-80, "Exploded View".
2. Remove drive belt. Refer to EM-15, "Removal and Installation".
3. Remove oil level gauge (1).
4. Remove oil level gauge guide (2).
5. Remove oil level gauge guide O-ring (3).

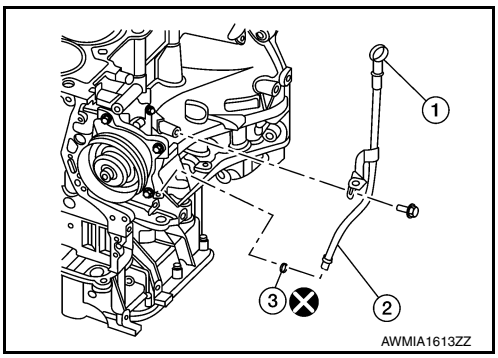

6. Disconnect harness connector (A) from the generator.
7. Remove “B” terminal nut (B) and “B” terminal harness.
8. Remove harness bracket (C).
   NOTE:
   Harness ground does not have to be removed during bracket removal.
9. Remove upper generator bolt (D), using suitable tool.
10. Remove lower generator bolt (E), using suitable tool.

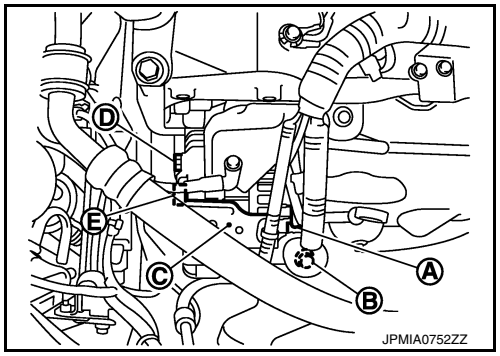

11. Remove generator upward from the vehicle.
12. Remove generator bracket (if necessary).

INSTALLATION

1. Install generator bracket and tighten bolts in the numerical order as shown.

   Bolts : 64.7 N·m (6.6 kg-m, 48 ft-lb)

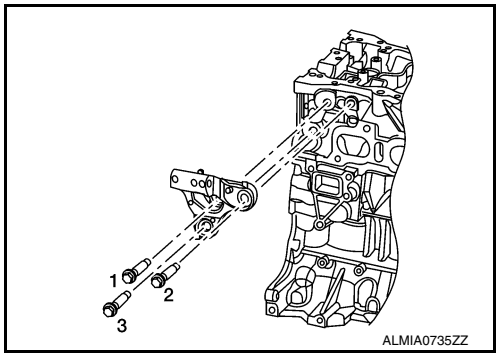

2. Install generator and temporarily tighten bolts in the reverse numerical order as shown.
3. Tighten generator bolts in the numerical order as shown.

   Bolts : 25 N·m (2.6 kg-m, 18 ft-lb)

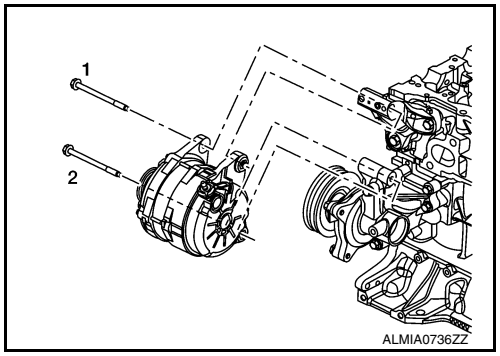

4. Installation of remaining components is in the reverse order of removal.

NOTE:
Tighten oil level gauge guide bolt to specification. Refer to EM-36, "Exploded View".

CAUTION:
- **Be careful to tighten “B” terminal nut carefully.**
- **Install generator and check tension of belt. Refer to EM-15, "Checking".**
- **Do not reuse oil level gauge guide O-ring.**
- **Prior to installation, apply clean engine oil to oil level gauge guide O-ring.**
- **Ensure O-ring sealing surface is free from dust or imperfections.**
- **Allow engine to run for 5 minutes and inspect for engine oil leaks.**

Inspection

INFOID:0000000012422872

GENERATOR PULLEY INSPECTION

Perform the following.
- Make sure that the generator pulley does not bind or rattle.
- Make sure that the generator pulley is tight.

SERVICE DATA AND SPECIFICATIONS (SDS)

SERVICE DATA AND SPECIFICATIONS (SDS)

Generator

INFOID:0000000012422873

Type*		VALEO
		TG12C152-2617232
Nominal rating	[V - A]	14 - 120
Ground polarity		Negative
Working speed	[rpm]	1500 - 18,000
Hot output current (When 14 V is applied)	[A/rpm]	46/1,500 69/1,800 82/2,000 96/2,500 104/3,000 110/4,000 117/5,000 120/6,000
Regulated output voltage	[V]	14.3V at 20°C

*: Always check with the Parts Department for the latest parts information.