SECTION EC
ENGINE CONTROL SYSTEM

CONTENTS

MR20DE (FOR CALIFORNIA)

SERVICE INFORMATION 24

INDEX FOR DTC 24
U0101-U1001 24
P0011-P0075 24
P0101-P0128 24
P0130-P0198 25
P0222-P0420 25
P0441-P0463 26
P0500-P0643 26
P0705-P0840 27
P0850-P1574 27
P1610-P1615 28
P1715-P1805 28
P2004-P2A00 28

PRECAUTIONS 30
Precaution for Supplemental Restraint System (SRS) "AIR BAG" and "SEAT BELT PRE-TENSIONER" 30
On Board Diagnosis (OBD) System of Engine and CVT 30
Precaution 31

PREPARATION 34
Special Service Tool 34
Commercial Service Tool 34

ENGINE CONTROL SYSTEM 36
Schematic 36
Multiport Fuel Injection (MFI) System 36
Electronic Ignition (EI) System 39
Fuel Cut Control (at No Load and High Engine Speed) 39

AIR CONDITIONING CUT CONTROL 41
Input/Output Signal Chart 41
System Description 41

AUTOMATIC SPEED CONTROL DEVICE (ASCD) 42
System Description 42
Component Description 43

CAN COMMUNICATION 44
System Description 44

EVAPORATIVE EMISSION SYSTEM 45
Description 45
Component Inspection 47
Removal and Installation 49
How to Detect Fuel Vapor Leakage 50

ON BOARD REFUELING VAPOR RECOVERY (ORVR) 52
System Description 52
Diagnosis Procedure 52
Component Inspection 55

POSITIVE CRANKCASE VENTILATION 58
Description 58
Component Inspection 58

NVIS (NISSAN VEHICLE IMMOBILIZER SYSTEM-NATS) 60
Description 60

ON BOARD DIAGNOSTIC (OBD) SYSTEM 61
Introduction 61
Two Trip Detection Logic 61
Emission-related Diagnostic Information 62
Malfunction Indicator Lamp (MIL) 84
OBD System Operation Chart 87

BASIC SERVICE PROCEDURE 93
Basic Inspection 93
Idle Speed and Ignition Timing Check 97
Procedure After Replacing ECM 98
VIN Registration 99
Accelerator Pedal Released Position Learning 99
Throttle Valve Closed Position Learning 99

Idle Air Volume Learning 99
Fuel Pressure Check 101

TROUBLE DIAGNOSIS 104
Trouble Diagnosis Introduction 104
DTC Inspection Priority Chart 109
Fail-Safe Chart 109
Symptom Matrix Chart 111
Engine Control Component Parts Location 115
Vacuum Hose Drawing 121
Circuit Diagram 122
ECM Harness Connector Terminal Layout 124
ECM Terminal and Reference Value 124
CONSULT-III Function (ENGINE) 131
Generic Scan Tool (GST) Function 138
CONSULT-III Reference Value in Data Monitor ...140

TROUBLE DIAGNOSIS - SPECIFICATION VALUE 144
Description 144
Testing Condition 144
Inspection Procedure 144
Diagnosis Procedure 144

TROUBLE DIAGNOSIS FOR INTERMITTENT INCIDENT 152
Description 152
Diagnosis Procedure 152

POWER SUPPLY AND GROUND CIRCUIT .. 153
Wiring Diagram 153
Diagnosis Procedure 154
Ground Inspection 157

DTC U0101 CAN COMMUNICATION LINE ... 159
Description 159
On Board Diagnosis Logic 159
DTC Confirmation Procedure 159
Wiring Diagram 160
Diagnosis Procedure 160

DTC U0140 CAN COMMUNICATION LINE ... 161
Description 161
On Board Diagnosis Logic 161
DTC Confirmation Procedure 161
Wiring Diagram 162
Diagnosis Procedure 162

DTC U1001 CAN COMMUNICATION LINE ... 163
Description 163
On Board Diagnosis Logic 163
DTC Confirmation Procedure 163
Wiring Diagram 164
Diagnosis Procedure 164

DTC P0011 IVT CONTROL 165
Description 165
CONSULT-III Reference Value in Data Monitor Mode 165
On Board Diagnosis Logic 166
DTC Confirmation Procedure 166
Diagnosis Procedure 167
Component Inspection 168
Removal and Installation 168

DTC P0031, P0032 A/F SENSOR 1 HEATER..169
Description 169
CONSULT-III Reference Value in Data Monitor Mode 169
On Board Diagnosis Logic 169
DTC Confirmation Procedure 169
Wiring Diagram 170
Diagnosis Procedure 171
Component Inspection 172
Removal and Installation 173

DTC P0037, P0038 HO2S2 HEATER 174
Description 174
CONSULT-III Reference Value in Data Monitor Mode 174
On Board Diagnosis Logic 174
DTC Confirmation Procedure 174
Wiring Diagram 176
Diagnosis Procedure 177
Component Inspection 178
Removal and Installation 179

DTC P0075 IVT CONTROL SOLENOID VALVE 180
Component Description 180
CONSULT-III Reference Value in Data Monitor Mode 180
On Board Diagnosis Logic 180
DTC Confirmation Procedure 180
Wiring Diagram 181
Diagnosis Procedure 182
Component Inspection 183
Removal and Installation 184

DTC P0101 MAF SENSOR 185
Component Description 185
CONSULT-III Reference Value in Data Monitor Mode 185
On Board Diagnosis Logic 185
DTC Confirmation Procedure 185
Overall Function Check 186
Wiring Diagram 188
Diagnosis Procedure 189
Component Inspection 191
Removal and Installation 192

DTC P0102, P0103 MAF SENSOR 193
Component Description 193
CONSULT-III Reference Value in Data Monitor Mode 193
On Board Diagnosis Logic 193
DTC Confirmation Procedure 193
Wiring Diagram 195
Diagnosis Procedure 196
Component Inspection 198
Removal and Installation 199

DTC P0112, P0113 IAT SENSOR **200**
Component Description 200
On Board Diagnosis Logic 200
DTC Confirmation Procedure 200
Wiring Diagram 201
Diagnosis Procedure 201
Component Inspection 203
Removal and Installation 203

DTC P0116 ECT SENSOR **204**
Component Description 204
On Board Diagnosis Logic 204
DTC Confirmation Procedure 204
Diagnosis Procedure 205
Component Inspection 205
Removal and Installation 206

DTC P0117, P0118 ECT SENSOR **207**
Component Description 207
On Board Diagnosis Logic 207
DTC Confirmation Procedure 208
Wiring Diagram 209
Diagnosis Procedure 209
Component Inspection 211
Removal and Installation 211

DTC P0122, P0123 TP SENSOR **212**
Component Description 212
CONSULT-III Reference Value in Data Monitor Mode 212
On Board Diagnosis Logic 212
DTC Confirmation Procedure 212
Wiring Diagram 213
Diagnosis Procedure 214
Component Inspection 215
Removal and Installation 216

DTC P0125 ECT SENSOR **217**
Component Description 217
On Board Diagnosis Logic 217
DTC Confirmation Procedure 217
Diagnosis Procedure 218
Component Inspection 218
Removal and Installation 219

DTC P0127 IAT SENSOR **220**
Component Description 220
On Board Diagnosis Logic 220
DTC Confirmation Procedure 220
Diagnosis Procedure 221
Component Inspection 221
Removal and Installation 222

DTC P0128 THERMOSTAT FUNCTION **223**
On Board Diagnosis Logic 223
DTC Confirmation Procedure 223
Diagnosis Procedure 223
Removal and Installation 224

DTC P0130 A/F SENSOR 1 ..... **225**
Component Description 225
CONSULT-III Reference Value in Data Monitor Mode 225
On Board Diagnosis Logic 225
DTC Confirmation Procedure 225
Overall Function Check 226
Wiring Diagram 227
Diagnosis Procedure 228
Removal and Installation 230

DTC P0131 A/F SENSOR 1 ..... **231**
Component Description 231
CONSULT-III Reference Value in Data Monitor Mode 231
On Board Diagnosis Logic 231
DTC Confirmation Procedure 231
Wiring Diagram 233
Diagnosis Procedure 234
Removal and Installation 236

DTC P0132 A/F SENSOR 1 ..... **237**
Component Description 237
CONSULT-III Reference Value in Data Monitor Mode 237
On Board Diagnosis Logic 237
DTC Confirmation Procedure 237
Wiring Diagram 239
Diagnosis Procedure 240
Removal and Installation 242

DTC P0133 A/F SENSOR 1 ..... **243**
Component Description 243
CONSULT-III Reference Value in Data Monitor Mode 243
On Board Diagnosis Logic 243
DTC Confirmation Procedure 243
Wiring Diagram 245
Diagnosis Procedure 246
Removal and Installation 249

DTC P0137 HO2S2 ..... **250**
Component Description 250
CONSULT-III Reference Value in Data Monitor Mode 250
On Board Diagnosis Logic 250
DTC Confirmation Procedure 250
Overall Function Check 251
Wiring Diagram 252
Diagnosis Procedure 253
Component Inspection 255
Removal and Installation 256

DTC P0138 HO2S2 ..... **257**
Component Description 257
CONSULT-III Reference Value in Data Monitor Mode 257
On Board Diagnosis Logic 257
DTC Confirmation Procedure 258
Overall Function Check 259
Wiring Diagram 260

Diagnosis Procedure 261
Component Inspection 264
Removal and Installation 265

DTC P0139 HO2S2 266
Component Description 266
CONSULT-III Reference Value in Data Monitor Mode 266
On Board Diagnosis Logic 266
DTC Confirmation Procedure 266
Overall Function Check 268
Wiring Diagram 270
Diagnosis Procedure 271
Component Inspection 273
Removal and Installation 274

DTC P0171 FUEL INJECTION SYSTEM FUNCTION 275
On Board Diagnosis Logic 275
DTC Confirmation Procedure 275
Wiring Diagram 277
Diagnosis Procedure 278

DTC P0172 FUEL INJECTION SYSTEM FUNCTION 281
On Board Diagnosis Logic 281
DTC Confirmation Procedure 281
Wiring Diagram 283
Diagnosis Procedure 284

DTC P0181 FTT SENSOR 287
Component Description 287
On Board Diagnosis Logic 287
DTC Confirmation Procedure 287
Wiring Diagram 288
Diagnosis Procedure 288
Component Inspection 290
Removal and Installation 290

DTC P0182, P0183 FTT SENSOR 291
Component Description 291
On Board Diagnosis Logic 291
DTC Confirmation Procedure 291
Wiring Diagram 292
Diagnosis Procedure 292
Component Inspection 294
Removal and Installation 294

DTC P0196 EOT SENSOR 295
Component Description 295
On Board Diagnosis Logic 295
DTC Confirmation Procedure 295
Diagnosis Procedure 296
Component Inspection 297
Removal and Installation 297

DTC P0197, P0198 EOT SENSOR 298
Component Description 298
On Board Diagnosis Logic 298
DTC Confirmation Procedure 298
Wiring Diagram 299
Diagnosis Procedure 299
Component Inspection 300
Removal and Installation 301

DTC P0222, P0223 TP SENSOR 302
Component Description 302
CONSULT-III Reference Value in Data Monitor Mode 302
On Board Diagnosis Logic 302
DTC Confirmation Procedure 302
Wiring Diagram 303
Diagnosis Procedure 304
Component Inspection 305
Removal and Installation 306

DTC P0300 - P0304 MULTIPLE CYLINDER MISFIRE, NO. 1 - 4 CYLINDER MISFIRE 307
On Board Diagnosis Logic 307
DTC Confirmation Procedure 307
Diagnosis Procedure 308

DTC P0327, P0328 KS 313
Component Description 313
On Board Diagnosis Logic 313
DTC Confirmation Procedure 313
Wiring Diagram 314
Diagnosis Procedure 315
Component Inspection 316
Removal and Installation 316

DTC P0335 CKP SENSOR (POS) 317
Component Description 317
CONSULT-III Reference Value in Data Monitor Mode 317
On Board Diagnosis Logic 317
DTC Confirmation Procedure 317
Wiring Diagram 319
Diagnosis Procedure 320
Component Inspection 323
Removal and Installation 323

DTC P0340 CMP SENSOR (PHASE) 324
Component Description 324
CONSULT-III Reference Value in Data Monitor Mode 324
On Board Diagnosis Logic 324
DTC Confirmation Procedure 324
Wiring Diagram 325
Diagnosis Procedure 326
Component Inspection 328
Removal and Installation 329

DTC P0420 THREE WAY CATALYST FUNCTION 330
On Board Diagnosis Logic 330
DTC Confirmation Procedure 330
Overall Function Check 331
Diagnosis Procedure 331

DTC P0441 EVAP CONTROL SYSTEM 335
System Description 335
On Board Diagnosis Logic 335
DTC Confirmation Procedure 335
Overall Function Check 336
Diagnosis Procedure 336
Component Inspection 339

DTC P0442 EVAP CONTROL SYSTEM 340
On Board Diagnosis Logic 340
DTC Confirmation Procedure 341
Diagnosis Procedure 341
Component Inspection 346

DTC P0443 EVAP CANISTER PURGE VOLUME CONTROL SOLENOID VALVE 347
Description 347
CONSULT-III Reference Value in Data Monitor Mode 347
On Board Diagnosis Logic 348
DTC Confirmation Procedure 348
Wiring Diagram 350
Diagnosis Procedure 351
Component Inspection 354
Removal and Installation 354

DTC P0444, P0445 EVAP CANISTER PURGE VOLUME CONTROL SOLENOID VALVE 355
Description 355
CONSULT-III Reference Value in Data Monitor Mode 355
On Board Diagnosis Logic 356
DTC Confirmation Procedure 356
Wiring Diagram 357
Diagnosis Procedure 358
Component Inspection 360
Removal and Installation 360

DTC P0447 EVAP CANISTER VENT CONTROL VALVE 361
Component Description 361
CONSULT-III Reference Value in Data Monitor Mode 361
On Board Diagnosis Logic 361
DTC Confirmation Procedure 361
Wiring Diagram 362
Diagnosis Procedure 363
Component Inspection 365

DTC P0448 EVAP CANISTER VENT CONTROL VALVE 367
Component Description 367
CONSULT-III Reference Value in Data Monitor Mode 367
On Board Diagnosis Logic 367
DTC Confirmation Procedure 367
Wiring Diagram 369
Diagnosis Procedure 370
Component Inspection 371

DTC P0451 EVAP CONTROL SYSTEM PRESSURE SENSOR 373
Component Description 373
CONSULT-III Reference Value in Data Monitor Mode 373
On Board Diagnosis Logic 373
DTC Confirmation Procedure 373
Diagnosis Procedure 374
Component Inspection 375

DTC P0452 EVAP CONTROL SYSTEM PRESSURE SENSOR 376
Component Description 376
CONSULT-III Reference Value in Data Monitor Mode 376
On Board Diagnosis Logic 376
DTC Confirmation Procedure 376
Wiring Diagram 378
Diagnosis Procedure 379
Component Inspection 382

DTC P0453 EVAP CONTROL SYSTEM PRESSURE SENSOR 383
Component Description 383
CONSULT-III Reference Value in Data Monitor Mode 383
On Board Diagnosis Logic 383
DTC Confirmation Procedure 384
Wiring Diagram 385
Diagnosis Procedure 386
Component Inspection 390

DTC P0455 EVAP CONTROL SYSTEM 391
On Board Diagnosis Logic 391
DTC Confirmation Procedure 391
Diagnosis Procedure 392
Component Inspection 396

DTC P0456 EVAP CONTROL SYSTEM 398
On Board Diagnosis Logic 398
DTC Confirmation Procedure 399
Overall Function Check 399
Diagnosis Procedure 400
Component Inspection 405

DTC P0460 FUEL LEVEL SENSOR 406
Component Description 406
On Board Diagnosis Logic 406
DTC Confirmation Procedure 406
Diagnosis Procedure 406
Removal and Installation 407

DTC P0461 FUEL LEVEL SENSOR 408
Component Description 408
On Board Diagnosis Logic 408
Overall Function Check 408
Diagnosis Procedure 408
Removal and Installation 409

DTC P0462, P0463 FUEL LEVEL SENSOR .. 410

Component Description 410
On Board Diagnosis Logic 410
DTC Confirmation Procedure 410
Diagnosis Procedure 410
Removal and Installation 411

DTC P0500 VSS 412
Description 412
On Board Diagnosis Logic 412
DTC Confirmation Procedure 412
Overall Function Check 413
Diagnosis Procedure 413

DTC P0506 ISC SYSTEM 414
Description 414
On Board Diagnosis Logic 414
DTC Confirmation Procedure 414
Diagnosis Procedure 414

DTC P0507 ISC SYSTEM 416
Description 416
On Board Diagnosis Logic 416
DTC Confirmation Procedure 416
Diagnosis Procedure 416

DTC P0603 ECM POWER SUPPLY 418
Component Description 418
On Board Diagnosis Logic 418
DTC Confirmation Procedure 418
Wiring Diagram 419
Diagnosis Procedure 420

DTC P0605 ECM 421
Component Description 421
On Board Diagnosis Logic 421
DTC Confirmation Procedure 421
Diagnosis Procedure 422

DTC P0607 ECM 423
Description 423
On Board Diagnosis Logic 423
DTC Confirmation Procedure 423
Diagnosis Procedure 423

DTC P0643 SENSOR POWER SUPPLY 424
On Board Diagnosis Logic 424
DTC Confirmation Procedure 424
Wiring Diagram 425
Diagnosis Procedure 426

DTC P0850 PNP SWITCH 429
Component Description 429
CONSULT-III Reference Value in Data Monitor Mode 429
On Board Diagnosis Logic 429
DTC Confirmation Procedure 429
Overall Function Check 430
Wiring Diagram 431
Diagnosis Procedure 432

DTC P1148 CLOSED LOOP CONTROL 434
On Board Diagnosis Logic 434

DTC P1212 TCS COMMUNICATION LINE 435
Description 435
On Board Diagnosis Logic 435
DTC Confirmation Procedure 435
Diagnosis Procedure 435

DTC P1217 ENGINE OVER TEMPERATURE..436
System Description 436
CONSULT-III Reference Value in Data Monitor Mode 437
On Board Diagnosis Logic 438
Overall Function Check 438
Wiring Diagram 440
Diagnosis Procedure 442
Main 13 Causes of Overheating 446
Component Inspection 447

DTC P1225 TP SENSOR 448
Component Description 448
On Board Diagnosis Logic 448
DTC Confirmation Procedure 448
Diagnosis Procedure 448
Removal and Installation 449

DTC P1226 TP SENSOR 450
Component Description 450
On Board Diagnosis Logic 450
DTC Confirmation Procedure 450
Diagnosis Procedure 450
Removal and Installation 451

DTC P1421 COLD START CONTROL 452
Description 452
On Board Diagnosis Logic 452
DTC Confirmation Procedure 452
Diagnosis Procedure 452

DTC P1564 ASCD STEERING SWITCH 454
Component Description 454
CONSULT-III Reference Value in Data Monitor Mode 454
On Board Diagnosis Logic 454
DTC Confirmation Procedure 455
Wiring Diagram 456
Diagnosis Procedure 457
Component Inspection 459

DTC P1572 ASCD BRAKE SWITCH 460
Component Description 460
CONSULT-III Reference Value in Data Monitor Mode 460
On Board Diagnosis Logic 460
DTC Confirmation Procedure 461
Wiring Diagram 462
Diagnosis Procedure 463
Component Inspection 467

DTC P1574 ASCD VEHICLE SPEED SENSOR 469

Component Description 469
On Board Diagnosis Logic 469
DTC Confirmation Procedure 469
Diagnosis Procedure 469

DTC P1715 INPUT SPEED SENSOR 471
Description 471
CONSULT-III Reference Value in Data Monitor Mode 471
On Board Diagnosis Logic 471
DTC Confirmation Procedure 471
Diagnosis Procedure 471

DTC P1805 BRAKE SWITCH 473
Description 473
CONSULT-III Reference Value in Data Monitor Mode 473
On Board Diagnosis Logic 473
DTC Confirmation Procedure 473
Wiring Diagram 474
Diagnosis Procedure 475
Component Inspection 476

DTC P2004 TUMBLE CONTROL VALVE 477
Description 477
CONSULT-III Reference Value in Data Monitor Mode 477
On Board Diagnosis Logic 478
DTC Confirmation Procedure 478
Wiring Diagram 479
Diagnosis Procedure 480
Component Inspection 484
Removal and Installation 484

DTC P2014 TUMBLE CONTROL VALVE POSITION SENSOR 485
Component Description 485
CONSULT-III Reference Value in Data Monitor Mode 485
On Board Diagnosis Logic 485
DTC Confirmation Procedure 485
Wiring Diagram 486
Diagnosis Procedure 487
Removal and Installation 490

DTC P2100, P2103 THROTTLE CONTROL MOTOR RELAY 491
Component Description 491
CONSULT-III Reference Value in Data Monitor Mode 491
On Board Diagnosis Logic 491
DTC Confirmation Procedure 491
Wiring Diagram 492
Diagnosis Procedure 493

DTC P2101 ELECTRIC THROTTLE CONTROL FUNCTION 495
Description 495
On Board Diagnosis Logic 495
DTC Confirmation Procedure 495
Wiring Diagram 496
Diagnosis Procedure 497
Component Inspection 500
Removal and Installation 500

DTC P2118 THROTTLE CONTROL MOTOR . 501
Component Description 501
On Board Diagnosis Logic 501
DTC Confirmation Procedure 501
Wiring Diagram 502
Diagnosis Procedure 503
Component Inspection 504
Removal and Installation 504

DTC P2119 ELECTRIC THROTTLE CONTROL ACTUATOR 505
Component Description 505
On Board Diagnosis Logic 505
DTC Confirmation Procedure 505
Diagnosis Procedure 506

DTC P2122, P2123 APP SENSOR 507
Component Description 507
CONSULT-III Reference Value in Data Monitor Mode 507
On Board Diagnosis Logic 507
DTC Confirmation Procedure 507
Wiring Diagram 508
Diagnosis Procedure 509
Component Inspection 511
Removal and Installation 511

DTC P2127, P2128 APP SENSOR 512
Component Description 512
CONSULT-III Reference Value in Data Monitor Mode 512
On Board Diagnosis Logic 512
DTC Confirmation Procedure 513
Wiring Diagram 514
Diagnosis Procedure 515
Component Inspection 517
Removal and Installation 518

DTC P2135 TP SENSOR 519
Component Description 519
CONSULT-III Reference Value in Data Monitor Mode 519
On Board Diagnosis Logic 519
DTC Confirmation Procedure 519
Wiring Diagram 520
Diagnosis Procedure 521
Component Inspection 522
Removal and Installation 523

DTC P2138 APP SENSOR 524
Component Description 524
CONSULT-III Reference Value in Data Monitor Mode 524
On Board Diagnosis Logic 524
DTC Confirmation Procedure 525

Wiring Diagram 526
Diagnosis Procedure 527
Component Inspection 530
Removal and Installation 530

DTC P2A00 A/F SENSOR 1 531
Component Description 531
CONSULT-III Reference Value in Data Monitor Mode 531
On Board Diagnosis Logic 531
DTC Confirmation Procedure 531
Wiring Diagram 533
Diagnosis Procedure 534
Removal and Installation 537

ASCD BRAKE SWITCH 538
Component Description 538
CONSULT-III Reference Value in Data Monitor Mode 538
Wiring Diagram 539
Diagnosis Procedure 540
Component Inspection 544

ASCD INDICATOR 546
Component Description 546
CONSULT-III Reference Value in Data Monitor Mode 546
Wiring Diagram 547
Diagnosis Procedure 547

ELECTRICAL LOAD SIGNAL 549
CONSULT-III Reference Value in Data Monitor Mode 549
Diagnosis Procedure 549

FUEL INJECTOR 551
Component Description 551
CONSULT-III Reference Value in Data Monitor Mode 551
Wiring Diagram 552
Diagnosis Procedure 553
Component Inspection 555
Removal and Installation 555

FUEL PUMP 556
Description 556
CONSULT-III Reference Value in Data Monitor Mode 556
Wiring Diagram 557
Diagnosis Procedure 558
Component Inspection 560
Removal and Installation 560

IGNITION SIGNAL 561
Component Description 561
Wiring Diagram 562
Diagnosis Procedure 565
Component Inspection 568
Removal and Installation 569

REFRIGERANT PRESSURE SENSOR 570
Component Description 570
Wiring Diagram 571
Diagnosis Procedure 572
Removal and Installation 574

MIL AND DATA LINK CONNECTOR 575
Wiring Diagram 575

SERVICE DATA AND SPECIFICATIONS (SDS) 577
Fuel Pressure 577
Idle Speed and Ignition Timing 577
Calculated Load Value 577
Mass Air Flow Sensor 577
Intake Air Temperature Sensor 577
Engine Coolant Temperature Sensor 577
Air Fuel Ratio (A/F) Sensor 1 Heater 577
Heated Oxygen sensor 2 Heater 578
Crankshaft Position Sensor (POS) 578
Camshaft Position Sensor (PHASE) 578
Throttle Control Motor 578
Fuel Injector 578
Fuel Pump 578

MR20DE (EXCEPT FOR CALIFORNIA)

SERVICE INFORMATION 579

INDEX FOR DTC 579
U0101-U1001 579
P0011-P0075 579
P0101-P0128 579
P0130-P0198 580
P0222-P0420 580
P0441-P0463 581
P0500-P0643 581
P0705-P0840 582
P0850-P1574 582
P1610-P1615 583
P1715-P1805 583
P2100-P2A00 583

PRECAUTIONS 585
Precaution for Supplemental Restraint System (SRS) "AIR BAG" and "SEAT BELT PRE-TENSIONER" 585
On Board Diagnosis (OBD) System of Engine and CVT 585
Precaution 586

PREPARATION 589
Special Service Tool 589
Commercial Service Tool 589

ENGINE CONTROL SYSTEM 591
Schematic 591
Multiport Fuel Injection (MFI) System 591
Electronic Ignition (EI) System 594
Fuel Cut Control (at No Load and High Engine Speed) 594

AIR CONDITIONING CUT CONTROL 596
Input/Output Signal Chart 596
System Description 596

AUTOMATIC SPEED CONTROL DEVICE (ASCD) 597
System Description 597
Component Description 598

CAN COMMUNICATION 599
System Description 599

EVAPORATIVE EMISSION SYSTEM 600
Description 600
Component Inspection 602
Removal and Installation 604
How to Detect Fuel Vapor Leakage 605

ON BOARD REFUELING VAPOR RECOVERY (ORVR) 607
System Description 607
Diagnosis Procedure 607
Component Inspection 610

POSITIVE CRANKCASE VENTILATION 613
Description 613
Component Inspection 613

NVIS (NISSAN VEHICLE IMMOBILIZER SYSTEM-NATS) 615
Description 615

ON BOARD DIAGNOSTIC (OBD) SYSTEM ... 616
Introduction 616
Two Trip Detection Logic 616
Emission-related Diagnostic Information 617
Malfunction Indicator Lamp (MIL) 639
OBD System Operation Chart 642

BASIC SERVICE PROCEDURE 648
Basic Inspection 648
Idle Speed and Ignition Timing Check 652
Procedure After Replacing ECM 653
VIN Registration 654
Accelerator Pedal Released Position Learning 654
Throttle Valve Closed Position Learning 654
Idle Air Volume Learning 654
Fuel Pressure Check 656

TROUBLE DIAGNOSIS 659
Trouble Diagnosis Introduction 659
DTC Inspection Priority Chart 664
Fail-Safe Chart 664
Symptom Matrix Chart 666
Engine Control Component Parts Location 670
Vacuum Hose Drawing 676
Circuit Diagram 677
ECM Harness Connector Terminal Layout 679
ECM Terminal and Reference Value 679
CONSULT-III Function (ENGINE) 686
Generic Scan Tool (GST) Function 693
CONSULT-III Reference Value in Data Monitor ... 694

TROUBLE DIAGNOSIS - SPECIFICATION VALUE 698
Description 698
Testing Condition 698
Inspection Procedure 698
Diagnosis Procedure 698

TROUBLE DIAGNOSIS FOR INTERMITTENT INCIDENT 706
Description 706
Diagnosis Procedure 706

POWER SUPPLY AND GROUND CIRCUIT .. 707
Wiring Diagram 707
Diagnosis Procedure 708
Ground Inspection 711

DTC U0101 CAN COMMUNICATION LINE ... 713
Description 713
On Board Diagnosis Logic 713
DTC Confirmation Procedure 713
Wiring Diagram 714
Diagnosis Procedure 714

DTC U0140 CAN COMMUNICATION LINE ... 715
Description 715
On Board Diagnosis Logic 715
DTC Confirmation Procedure 715
Wiring Diagram 716
Diagnosis Procedure 716

DTC U1001 CAN COMMUNICATION LINE ... 717
Description 717
On Board Diagnosis Logic 717
DTC Confirmation Procedure 717
Wiring Diagram 718
Diagnosis Procedure 718

DTC P0011 IVT CONTROL 719
Description 719
CONSULT-III Reference Value in Data Monitor Mode 719
On Board Diagnosis Logic 720
DTC Confirmation Procedure 720
Diagnosis Procedure 721
Component Inspection 722
Removal and Installation 722

DTC P0031, P0032 A/F SENSOR 1 HEATER. 723
Description 723
CONSULT-III Reference Value in Data Monitor Mode 723
On Board Diagnosis Logic 723
DTC Confirmation Procedure 723
Wiring Diagram 724
Diagnosis Procedure 725
Component Inspection 726
Removal and Installation 727

DTC P0037, P0038 HO2S2 HEATER 728
Description 728
CONSULT-III Reference Value in Data Monitor Mode 728
On Board Diagnosis Logic 728
DTC Confirmation Procedure 728
Wiring Diagram 730
Diagnosis Procedure 731
Component Inspection 732
Removal and Installation 733

DTC P0075 IVT CONTROL SOLENOID VALVE 734
Component Description 734
CONSULT-III Reference Value in Data Monitor Mode 734
On Board Diagnosis Logic 734
DTC Confirmation Procedure 734
Wiring Diagram 735
Diagnosis Procedure 736
Component Inspection 737
Removal and Installation 738

DTC P0101 MAF SENSOR 739
Component Description 739
CONSULT-III Reference Value in Data Monitor Mode 739
On Board Diagnosis Logic 739
DTC Confirmation Procedure 739
Overall Function Check 740
Wiring Diagram 742
Diagnosis Procedure 743
Component Inspection 745
Removal and Installation 746

DTC P0102, P0103 MAF SENSOR 747
Component Description 747
CONSULT-III Reference Value in Data Monitor Mode 747
On Board Diagnosis Logic 747
DTC Confirmation Procedure 747
Wiring Diagram 749
Diagnosis Procedure 750
Component Inspection 752
Removal and Installation 753

DTC P0112, P0113 IAT SENSOR 754
Component Description 754
On Board Diagnosis Logic 754
DTC Confirmation Procedure 754
Wiring Diagram 755
Diagnosis Procedure 755
Component Inspection 757
Removal and Installation 757

DTC P0116 ECT SENSOR 758
Component Description 758
On Board Diagnosis Logic 758
DTC Confirmation Procedure 758
Diagnosis Procedure 759
Component Inspection 759
Removal and Installation 760

DTC P0117, P0118 ECT SENSOR 761
Component Description 761
On Board Diagnosis Logic 761
DTC Confirmation Procedure 762
Wiring Diagram 763
Diagnosis Procedure 763
Component Inspection 765
Removal and Installation 765

DTC P0122, P0123 TP SENSOR 766
Component Description 766
CONSULT-III Reference Value in Data Monitor Mode 766
On Board Diagnosis Logic 766
DTC Confirmation Procedure 766
Wiring Diagram 767
Diagnosis Procedure 768
Component Inspection 769
Removal and Installation 770

DTC P0125 ECT SENSOR 771
Component Description 771
On Board Diagnosis Logic 771
DTC Confirmation Procedure 771
Diagnosis Procedure 772
Component Inspection 772
Removal and Installation 773

DTC P0127 IAT SENSOR 774
Component Description 774
On Board Diagnosis Logic 774
DTC Confirmation Procedure 774
Diagnosis Procedure 775
Component Inspection 775
Removal and Installation 776

DTC P0128 THERMOSTAT FUNCTION 777
On Board Diagnosis Logic 777
DTC Confirmation Procedure 777
Diagnosis Procedure 777
Removal and Installation 778

DTC P0130 A/F SENSOR 1 779
Component Description 779
CONSULT-III Reference Value in Data Monitor Mode 779
On Board Diagnosis Logic 779
DTC Confirmation Procedure 779
Overall Function Check 780
Wiring Diagram 781
Diagnosis Procedure 782
Removal and Installation 784

DTC P0131 A/F SENSOR 1 785
Component Description 785
CONSULT-III Reference Value in Data Monitor Mode 785

On Board Diagnosis Logic 785
DTC Confirmation Procedure 785
Wiring Diagram 787
Diagnosis Procedure 788
Removal and Installation 790

DTC P0132 A/F SENSOR 1 791
Component Description 791
CONSULT-III Reference Value in Data Monitor Mode 791
On Board Diagnosis Logic 791
DTC Confirmation Procedure 791
Wiring Diagram 793
Diagnosis Procedure 794
Removal and Installation 796

DTC P0133 A/F SENSOR 1 797
Component Description 797
CONSULT-III Reference Value in Data Monitor Mode 797
On Board Diagnosis Logic 797
DTC Confirmation Procedure 797
Wiring Diagram 799
Diagnosis Procedure 800
Removal and Installation 803

DTC P0137 HO2S2 804
Component Description 804
CONSULT-III Reference Value in Data Monitor Mode 804
On Board Diagnosis Logic 804
DTC Confirmation Procedure 804
Overall Function Check 805
Wiring Diagram 806
Diagnosis Procedure 807
Component Inspection 809
Removal and Installation 810

DTC P0138 HO2S2 811
Component Description 811
CONSULT-III Reference Value in Data Monitor Mode 811
On Board Diagnosis Logic 811
DTC Confirmation Procedure 812
Overall Function Check 813
Wiring Diagram 814
Diagnosis Procedure 815
Component Inspection 818
Removal and Installation 819

DTC P0139 HO2S2 820
Component Description 820
CONSULT-III Reference Value in Data Monitor Mode 820
On Board Diagnosis Logic 820
DTC Confirmation Procedure 820
Overall Function Check 822
Wiring Diagram 823
Diagnosis Procedure 824
Component Inspection 826
Removal and Installation 827

DTC P0171 FUEL INJECTION SYSTEM FUNCTION 828
On Board Diagnosis Logic 828
DTC Confirmation Procedure 828
Wiring Diagram 830
Diagnosis Procedure 831

DTC P0172 FUEL INJECTION SYSTEM FUNCTION 834
On Board Diagnosis Logic 834
DTC Confirmation Procedure 834
Wiring Diagram 836
Diagnosis Procedure 837

DTC P0181 FTT SENSOR 840
Component Description 840
On Board Diagnosis Logic 840
DTC Confirmation Procedure 840
Wiring Diagram 841
Diagnosis Procedure 841
Component Inspection 843
Removal and Installation 843

DTC P0182, P0183 FTT SENSOR 844
Component Description 844
On Board Diagnosis Logic 844
DTC Confirmation Procedure 844
Wiring Diagram 845
Diagnosis Procedure 845
Component Inspection 847
Removal and Installation 847

DTC P0196 EOT SENSOR 848
Component Description 848
On Board Diagnosis Logic 848
DTC Confirmation Procedure 848
Diagnosis Procedure 849
Component Inspection 850
Removal and Installation 850

DTC P0197, P0198 EOT SENSOR 851
Component Description 851
On Board Diagnosis Logic 851
DTC Confirmation Procedure 851
Wiring Diagram 852
Diagnosis Procedure 852
Component Inspection 853
Removal and Installation 854

DTC P0222, P0223 TP SENSOR 855
Component Description 855
CONSULT-III Reference Value in Data Monitor Mode 855
On Board Diagnosis Logic 855
DTC Confirmation Procedure 855
Wiring Diagram 856
Diagnosis Procedure 857
Component Inspection 858

Removal and Installation 859

DTC P0300 - P0304 MULTIPLE CYLINDER MISFIRE, NO. 1 - 4 CYLINDER MISFIRE 860
On Board Diagnosis Logic 860
DTC Confirmation Procedure 860
Diagnosis Procedure 861

DTC P0327, P0328 KS 866
Component Description 866
On Board Diagnosis Logic 866
DTC Confirmation Procedure 866
Wiring Diagram 867
Diagnosis Procedure 868
Component Inspection 869
Removal and Installation 869

DTC P0335 CKP SENSOR (POS) 870
Component Description 870
CONSULT-III Reference Value in Data Monitor Mode 870
On Board Diagnosis Logic 870
DTC Confirmation Procedure 870
Wiring Diagram 871
Diagnosis Procedure 872
Component Inspection 875
Removal and Installation 875

DTC P0340 CMP SENSOR (PHASE) 876
Component Description 876
CONSULT-III Reference Value in Data Monitor Mode 876
On Board Diagnosis Logic 876
DTC Confirmation Procedure 876
Wiring Diagram 877
Diagnosis Procedure 878
Component Inspection 880
Removal and Installation 881

DTC P0420 THREE WAY CATALYST FUNCTION 882
On Board Diagnosis Logic 882
DTC Confirmation Procedure 882
Overall Function Check 883
Diagnosis Procedure 883

DTC P0441 EVAP CONTROL SYSTEM 887
System Description 887
On Board Diagnosis Logic 887
DTC Confirmation Procedure 887
Overall Function Check 888
Diagnosis Procedure 888
Component Inspection 891

DTC P0442 EVAP CONTROL SYSTEM 892
On Board Diagnosis Logic 892
DTC Confirmation Procedure 893
Diagnosis Procedure 893
Component Inspection 898

DTC P0443 EVAP CANISTER PURGE VOLUME CONTROL SOLENOID VALVE 899
Description 899
CONSULT-III Reference Value in Data Monitor Mode 899
On Board Diagnosis Logic 900
DTC Confirmation Procedure 900
Wiring Diagram 902
Diagnosis Procedure 903
Component Inspection 906
Removal and Installation 906

DTC P0444, P0445 EVAP CANISTER PURGE VOLUME CONTROL SOLENOID VALVE 907
Description 907
CONSULT-III Reference Value in Data Monitor Mode 907
On Board Diagnosis Logic 908
DTC Confirmation Procedure 908
Wiring Diagram 909
Diagnosis Procedure 910
Component Inspection 912
Removal and Installation 912

DTC P0447 EVAP CANISTER VENT CONTROL VALVE 913
Component Description 913
CONSULT-III Reference Value in Data Monitor Mode 913
On Board Diagnosis Logic 913
DTC Confirmation Procedure 913
Wiring Diagram 914
Diagnosis Procedure 915
Component Inspection 917

DTC P0448 EVAP CANISTER VENT CONTROL VALVE 919
Component Description 919
CONSULT-III Reference Value in Data Monitor Mode 919
On Board Diagnosis Logic 919
DTC Confirmation Procedure 919
Wiring Diagram 921
Diagnosis Procedure 922
Component Inspection 923

DTC P0451 EVAP CONTROL SYSTEM PRESSURE SENSOR 925
Component Description 925
CONSULT-III Reference Value in Data Monitor Mode 925
On Board Diagnosis Logic 925
DTC Confirmation Procedure 925
Diagnosis Procedure 926
Component Inspection 927

DTC P0452 EVAP CONTROL SYSTEM PRESSURE SENSOR 928
Component Description 928

CONSULT-III Reference Value in Data Monitor Mode 928
On Board Diagnosis Logic 928
DTC Confirmation Procedure 928
Wiring Diagram 930
Diagnosis Procedure 931
Component Inspection 934

DTC P0453 EVAP CONTROL SYSTEM PRESSURE SENSOR 935
Component Description 935
CONSULT-III Reference Value in Data Monitor Mode 935
On Board Diagnosis Logic 935
DTC Confirmation Procedure 936
Wiring Diagram 937
Diagnosis Procedure 938
Component Inspection 942

DTC P0455 EVAP CONTROL SYSTEM 943
On Board Diagnosis Logic 943
DTC Confirmation Procedure 943
Diagnosis Procedure 944
Component Inspection 949

DTC P0456 EVAP CONTROL SYSTEM 950
On Board Diagnosis Logic 950
DTC Confirmation Procedure 951
Overall Function Check 951
Diagnosis Procedure 952
Component Inspection 957

DTC P0460 FUEL LEVEL SENSOR 958
Component Description 958
On Board Diagnosis Logic 958
DTC Confirmation Procedure 958
Diagnosis Procedure 958
Removal and Installation 959

DTC P0461 FUEL LEVEL SENSOR 960
Component Description 960
On Board Diagnosis Logic 960
Overall Function Check 960
Diagnosis Procedure 960
Removal and Installation 961

DTC P0462, P0463 FUEL LEVEL SENSOR ... 962
Component Description 962
On Board Diagnosis Logic 962
DTC Confirmation Procedure 962
Diagnosis Procedure 962
Removal and Installation 963

DTC P0500 VSS 964
Description 964
On Board Diagnosis Logic 964
DTC Confirmation Procedure 964
Overall Function Check 965
Diagnosis Procedure 965

DTC P0506 ISC SYSTEM 966
Description 966
On Board Diagnosis Logic 966
DTC Confirmation Procedure 966
Diagnosis Procedure 966

DTC P0507 ISC SYSTEM 968
Description 968
On Board Diagnosis Logic 968
DTC Confirmation Procedure 968
Diagnosis Procedure 968

DTC P0603 ECM POWER SUPPLY 970
Component Description 970
On Board Diagnosis Logic 970
DTC Confirmation Procedure 970
Wiring Diagram 971
Diagnosis Procedure 972

DTC P0605 ECM 973
Component Description 973
On Board Diagnosis Logic 973
DTC Confirmation Procedure 973
Diagnosis Procedure 974

DTC P0607 ECM 975
Description 975
On Board Diagnosis Logic 975
DTC Confirmation Procedure 975
Diagnosis Procedure 975

DTC P0643 SENSOR POWER SUPPLY 976
On Board Diagnosis Logic 976
DTC Confirmation Procedure 976
Wiring Diagram 977
Diagnosis Procedure 978

DTC P0850 PNP SWITCH 981
Component Description 981
CONSULT-III Reference Value in Data Monitor Mode 981
On Board Diagnosis Logic 981
DTC Confirmation Procedure 981
Overall Function Check 982
Wiring Diagram 983
Diagnosis Procedure 984

DTC P1148 CLOSED LOOP CONTROL 986
On Board Diagnosis Logic 986

DTC P1212 TCS COMMUNICATION LINE 987
Description 987
On Board Diagnosis Logic 987
DTC Confirmation Procedure 987
Diagnosis Procedure 987

DTC P1217 ENGINE OVER TEMPERATURE. 988
System Description 988
CONSULT-III Reference Value in Data Monitor Mode 989
On Board Diagnosis Logic 990
Overall Function Check 990

Wiring Diagram 992
Diagnosis Procedure 994
Main 13 Causes of Overheating 998
Component Inspection 999

DTC P1225 TP SENSOR 1000
Component Description 1000
On Board Diagnosis Logic 1000
DTC Confirmation Procedure 1000
Diagnosis Procedure 1000
Removal and Installation 1001

DTC P1226 TP SENSOR 1002
Component Description 1002
On Board Diagnosis Logic 1002
DTC Confirmation Procedure 1002
Diagnosis Procedure 1002
Removal and Installation 1003

DTC P1421 COLD START CONTROL 1004
Description 1004
On Board Diagnosis Logic 1004
DTC Confirmation Procedure 1004
Diagnosis Procedure 1004

DTC P1564 ASCD STEERING SWITCH 1006
Component Description 1006
CONSULT-III Reference Value in Data Monitor Mode 1006
On Board Diagnosis Logic 1006
DTC Confirmation Procedure 1007
Wiring Diagram 1008
Diagnosis Procedure 1009
Component Inspection 1011

DTC P1572 ASCD BRAKE SWITCH 1012
Component Description 1012
CONSULT-III Reference Value in Data Monitor Mode 1012
On Board Diagnosis Logic 1012
DTC Confirmation Procedure 1013
Wiring Diagram 1014
Diagnosis Procedure 1015
Component Inspection 1019

DTC P1574 ASCD VEHICLE SPEED SENSOR 1021
Component Description 1021
On Board Diagnosis Logic 1021
DTC Confirmation Procedure 1021
Diagnosis Procedure 1021

DTC P1715 INPUT SPEED SENSOR 1023
Description 1023
CONSULT-III Reference Value in Data Monitor Mode 1023
On Board Diagnosis Logic 1023
DTC Confirmation Procedure 1023
Diagnosis Procedure 1023

DTC P1805 BRAKE SWITCH 1025
Description 1025
CONSULT-III Reference Value in Data Monitor Mode 1025
On Board Diagnosis Logic 1025
DTC Confirmation Procedure 1025
Wiring Diagram 1026
Diagnosis Procedure 1027
Component Inspection 1028

DTC P2100, P2103 THROTTLE CONTROL MOTOR RELAY 1029
Component Description 1029
CONSULT-III Reference Value in Data Monitor Mode 1029
On Board Diagnosis Logic 1029
DTC Confirmation Procedure 1029
Wiring Diagram 1030
Diagnosis Procedure 1031

DTC P2101 ELECTRIC THROTTLE CONTROL FUNCTION 1033
Description 1033
On Board Diagnosis Logic 1033
DTC Confirmation Procedure 1033
Wiring Diagram 1034
Diagnosis Procedure 1035
Component Inspection 1038
Removal and Installation 1038

DTC P2118 THROTTLE CONTROL MOTOR 1039
Component Description 1039
On Board Diagnosis Logic 1039
DTC Confirmation Procedure 1039
Wiring Diagram 1040
Diagnosis Procedure 1041
Component Inspection 1042
Removal and Installation 1042

DTC P2119 ELECTRIC THROTTLE CONTROL ACTUATOR 1043
Component Description 1043
On Board Diagnosis Logic 1043
DTC Confirmation Procedure 1043
Diagnosis Procedure 1044

DTC P2122, P2123 APP SENSOR 1045
Component Description 1045
CONSULT-III Reference Value in Data Monitor Mode 1045
On Board Diagnosis Logic 1045
DTC Confirmation Procedure 1045
Wiring Diagram 1046
Diagnosis Procedure 1047
Component Inspection 1049
Removal and Installation 1049

DTC P2127, P2128 APP SENSOR 1050
Component Description 1050
CONSULT-III Reference Value in Data Monitor Mode 1050

On Board Diagnosis Logic 1050
DTC Confirmation Procedure 1051
Wiring Diagram 1052
Diagnosis Procedure 1053
Component Inspection 1055
Removal and Installation 1056

DTC P2135 TP SENSOR 1057
Component Description 1057
CONSULT-III Reference Value in Data Monitor Mode 1057
On Board Diagnosis Logic 1057
DTC Confirmation Procedure 1057
Wiring Diagram 1058
Diagnosis Procedure 1059
Component Inspection 1060
Removal and Installation 1061

DTC P2138 APP SENSOR 1062
Component Description 1062
CONSULT-III Reference Value in Data Monitor Mode 1062
On Board Diagnosis Logic 1062
DTC Confirmation Procedure 1063
Wiring Diagram 1064
Diagnosis Procedure 1065
Component Inspection 1068
Removal and Installation 1068

DTC P2A00 A/F SENSOR 1 1069
Component Description 1069
CONSULT-III Reference Value in Data Monitor Mode 1069
On Board Diagnosis Logic 1069
DTC Confirmation Procedure 1069
Wiring Diagram 1071
Diagnosis Procedure 1072
Removal and Installation 1075

ASCD BRAKE SWITCH 1076
Component Description 1076
CONSULT-III Reference Value in Data Monitor Mode 1076
Wiring Diagram 1077
Diagnosis Procedure 1078
Component Inspection 1082

ASCD INDICATOR 1084
Component Description 1084
CONSULT-III Reference Value in Data Monitor Mode 1084
Wiring Diagram 1085
Diagnosis Procedure 1085

ELECTRICAL LOAD SIGNAL 1087
CONSULT-III Reference Value in Data Monitor Mode 1087
Diagnosis Procedure 1087

FUEL INJECTOR 1089
Component Description 1089
CONSULT-III Reference Value in Data Monitor Mode 1089
Wiring Diagram 1090
Diagnosis Procedure 1091
Component Inspection 1093
Removal and Installation 1093

FUEL PUMP 1094
Description 1094
CONSULT-III Reference Value in Data Monitor Mode 1094
Wiring Diagram 1095
Diagnosis Procedure 1096
Component Inspection 1098
Removal and Installation 1098

IGNITION SIGNAL 1099
Component Description 1099
Wiring Diagram 1100
Diagnosis Procedure 1103
Component Inspection 1106
Removal and Installation 1107

REFRIGERANT PRESSURE SENSOR 1108
Component Description 1108
Wiring Diagram 1109
Diagnosis Procedure 1110
Removal and Installation 1112

MIL AND DATA LINK CONNECTOR 1113
Wiring Diagram 1113

SERVICE DATA AND SPECIFICATIONS (SDS) 1115
Fuel Pressure 1115
Idle Speed and Ignition Timing 1115
Calculated Load Value 1115
Mass Air Flow Sensor 1115
Intake Air Temperature Sensor 1115
Engine Coolant Temperature Sensor 1115
Air Fuel Ratio (A/F) Sensor 1 Heater 1115
Heated Oxygen sensor 2 Heater 1116
Crankshaft Position Sensor (POS) 1116
Camshaft Position Sensor (PHASE) 1116
Throttle Control Motor 1116
Fuel Injector 1116
Fuel Pump 1116

QR25DE

SERVICE INFORMATION 1117

INDEX FOR DTC 1117
U0101-U1001 1117
P0011-P0075 1117
P0101-P0128 1117
P0130-P0159 1118
P0171-P0223 1118
P0300-P0430 1119
P0441-P0463 1119

P0500-P0643 1120
P0705-P0850 1120
P1148-P1574 1121
P1610-P1615 1121
P1715-P1805 1121
P2100-P2A03 1122

PRECAUTIONS 1123
Precaution for Supplemental Restraint System (SRS) "AIR BAG" and "SEAT BELT PRE-TENSIONER" 1123
Precaution for Procedure without Cowl Top Cover 1123
On Board Diagnosis (OBD) System of Engine and CVT 1123
Precaution 1124

PREPARATION 1127
Special Service Tool 1127
Commercial Service Tool 1127

ENGINE CONTROL SYSTEM 1129
Schematic 1129
Multiport Fuel Injection (MFI) System 1129
Electronic Ignition (EI) System 1132
Fuel Cut Control (at No Load and High Engine Speed) 1132

AIR CONDITIONING CUT CONTROL 1134
Input/Output Signal Chart 1134
System Description 1134

AUTOMATIC SPEED CONTROL DEVICE (ASCD) 1135
System Description 1135
Component Description 1136

CAN COMMUNICATION 1137
System Description 1137

EVAPORATIVE EMISSION SYSTEM 1138
Description 1138
Component Inspection 1140
Removal and Installation 1142
How to Detect Fuel Vapor Leakage 1143

ON BOARD REFUELING VAPOR RECOVERY (ORVR) 1145
System Description 1145
Diagnosis Procedure 1145
Component Inspection 1148

POSITIVE CRANKCASE VENTILATION 1151
Description 1151
Component Inspection 1151

NVIS (NISSAN VEHICLE IMMOBILIZER SYSTEM-NATS) 1153
Description 1153

ON BOARD DIAGNOSTIC (OBD) SYSTEM ..1154
Introduction 1154
Two Trip Detection Logic 1154
Emission-related Diagnostic Information 1155
Malfunction Indicator Lamp (MIL) 1178
OBD System Operation Chart 1181

BASIC SERVICE PROCEDURE 1187
Basic Inspection 1187
Idle Speed and Ignition Timing Check 1191
Procedure After Replacing ECM 1192
VIN Registration 1193
Accelerator Pedal Released Position Learning 1193
Throttle Valve Closed Position Learning 1193
Idle Air Volume Learning 1193
Fuel Pressure Check 1195

TROUBLE DIAGNOSIS 1197
Trouble Diagnosis Introduction 1197
DTC Inspection Priority Chart 1202
Fail-safe Chart 1202
Symptom Matrix Chart 1204
Engine Control Component Parts Location 1208
Vacuum Hose Drawing 1214
Circuit Diagram 1215
ECM Harness Connector Terminal Layout 1217
ECM Terminal and Reference Value 1217
CONSULT-III Function (ENGINE) 1224
Generic Scan Tool (GST) Function 1231
CONSULT-III Reference Value in Data Monitor Mode 1233

TROUBLE DIAGNOSIS - SPECIFICATION VALUE 1237
Description 1237
Testing Condition 1237
Inspection Procedure 1237
Diagnosis Procedure 1237

TROUBLE DIAGNOSIS FOR INTERMITTENT INCIDENT 1245
Description 1245
Diagnosis Procedure 1245

POWER SUPPLY AND GROUND CIRCUIT ..1246
Wiring Diagram 1246
Diagnosis Procedure 1247
Ground Inspection 1251

DTC U0101 CAN COMMUNICATION LINE ...1252
Description 1252
On Board Diagnosis Logic 1252
DTC Confirmation Procedure 1252
Wiring Diagram 1253
Diagnosis Procedure 1253

DTC U0140 CAN COMMUNICATION LINE ...1254
Description 1254
On Board Diagnosis Logic 1254
DTC Confirmation Procedure 1254
Wiring Diagram 1255
Diagnosis Procedure 1255

DTC U1001 CAN COMMUNICATION LINE ...1256
Description 1256
On Board Diagnosis Logic 1256
DTC Confirmation Procedure 1256
Wiring Diagram 1257
Diagnosis Procedure 1257

DTC P0011 IVT CONTROL 1258
Description 1258
CONSULT-III Reference Value in Data Monitor Mode 1258
On Board Diagnosis Logic 1259
DTC Confirmation Procedure 1259
Diagnosis Procedure 1260
Component Inspection 1261
Removal and Installation 1261

DTC P0031, P0032, P0051, P0052 A/F SENSOR 1 HEATER 1262
Description 1262
CONSULT-III Reference Value in Data Monitor Mode 1262
On Board Diagnosis Logic 1262
DTC Confirmation Procedure 1262
Wiring Diagram 1263
Diagnosis Procedure 1266
Component Inspection 1267
Removal and Installation 1268

DTC P0037, P0038, P0057, P0058 HO2S2 HEATER 1269
Description 1269
CONSULT-III Reference Value in Data Monitor Mode 1269
On Board Diagnosis Logic 1269
DTC Confirmation Procedure 1269
Wiring Diagram 1271
Diagnosis Procedure 1274
Component Inspection 1276
Removal and Installation 1276

DTC P0075 IVT CONTROL SOLENOID VALVE 1277
Component Description 1277
CONSULT-III Reference Value in Data Monitor Mode 1277
On Board Diagnosis Logic 1277
DTC Confirmation Procedure 1277
Wiring Diagram 1278
Diagnosis Procedure 1279
Component Inspection 1280
Removal and Installation 1281

DTC P0101 MAF SENSOR 1282
Component Description 1282
CONSULT-III Reference Value in Data Monitor Mode 1282
On Board Diagnosis Logic 1282
DTC Confirmation Procedure 1282
Overall Function Check 1283
Wiring Diagram 1284
Diagnosis Procedure 1285
Component Inspection 1287
Removal and Installation 1288

DTC P0102, P0103 MAF SENSOR 1289
Component Description 1289
CONSULT-III Reference Value in Data Monitor Mode 1289
On Board Diagnosis Logic 1289
DTC Confirmation Procedure 1289
Wiring Diagram 1291
Diagnosis Procedure 1292
Component Inspection 1294
Removal and Installation 1295

DTC P0112, P0113 IAT SENSOR 1296
Component Description 1296
On Board Diagnosis Logic 1296
DTC Confirmation Procedure 1296
Wiring Diagram 1297
Diagnosis Procedure 1297
Component Inspection 1299
Removal and Installation 1299

DTC P0116 ECT SENSOR 1300
Description 1300
On Board Diagnosis Logic 1300
DTC Confirmation Procedure 1300
Diagnosis Procedure 1301
Component Inspection 1301
Removal and Installation 1302

DTC P0117, P0118 ECT SENSOR 1303
Component Description 1303
On Board Diagnosis Logic 1303
DTC Confirmation Procedure 1304
Wiring Diagram 1305
Diagnosis Procedure 1305
Component Inspection 1307
Removal and Installation 1307

DTC P0122, P0123 TP SENSOR 1308
Component Description 1308
CONSULT-III Reference Value in Data Monitor Mode 1308
On Board Diagnosis Logic 1308
DTC Confirmation Procedure 1308
Wiring Diagram 1309
Diagnosis Procedure 1310
Component Inspection 1312
Removal and Installation 1312

DTC P0125 ECT SENSOR 1313
Description 1313
On Board Diagnosis Logic 1313
DTC Confirmation Procedure 1313
Diagnosis Procedure 1314
Component Inspection 1315
Removal and Installation 1315

DTC P0127 IAT SENSOR 1316
Component Description 1316
On Board Diagnosis Logic 1316
DTC Confirmation Procedure 1316
Diagnosis Procedure 1317
Component Inspection 1317
Removal and Installation 1318

DTC P0128 THERMOSTAT FUNCTION 1319
On Board Diagnosis Logic 1319
DTC Confirmation Procedure 1319
Diagnosis Procedure 1319
Component Inspection 1320
Removal and Installation 1320

DTC P0130, P0150 A/F SENSOR 1 1321
Component Description 1321
CONSULT-III Reference Value in Data Monitor Mode 1321
On Board Diagnosis Logic 1321
DTC Confirmation Procedure 1321
Overall Function Check 1322
Wiring Diagram 1323
Diagnosis Procedure 1326
Removal and Installation 1328

DTC P0131, P0151 A/F SENSOR 1 1329
Component Description 1329
CONSULT-III Reference Value in Data Monitor Mode 1329
On Board Diagnosis Logic 1329
DTC Confirmation Procedure 1329
Wiring Diagram 1331
Diagnosis Procedure 1334
Removal and Installation 1336

DTC P0132, P0152 A/F SENSOR 1 1337
Component Description 1337
CONSULT-III Reference Value in Data Monitor Mode 1337
On Board Diagnosis Logic 1337
DTC Confirmation Procedure 1337
Wiring Diagram 1339
Diagnosis Procedure 1342
Removal and Installation 1344

DTC P0133, P0153 A/F SENSOR 1 1345
Component Description 1345
CONSULT-III Reference Value in Data Monitor Mode 1345
On Board Diagnosis Logic 1345
DTC Confirmation Procedure 1345
Wiring Diagram 1347
Diagnosis Procedure 1350
Removal and Installation 1353

DTC P0137, P0157 HO2S2 1354
Component Description 1354
CONSULT-III Reference Value in Data Monitor Mode 1354
On Board Diagnosis Logic 1354
DTC Confirmation Procedure 1354
Overall Function Check 1355
Wiring Diagram 1356
Diagnosis Procedure 1359
Component Inspection 1361
Removal and Installation 1362

DTC P0138, P0158 HO2S2 1363
Component Description 1363
CONSULT-III Reference Value in Data Monitor Mode 1363
On Board Diagnosis Logic 1363
DTC Confirmation Procedure 1364
Overall Function Check 1365
Wiring Diagram 1366
Diagnosis Procedure 1369
Component Inspection 1372
Removal and Installation 1373

DTC P0139, P0159 HO2S2 1375
Component Description 1375
CONSULT-III Reference Value in Data Monitor Mode 1375
On Board Diagnosis Logic 1375
DTC Confirmation Procedure 1376
Overall Function Check 1377
Wiring Diagram 1378
Diagnosis Procedure 1381
Component Inspection 1383
Removal and Installation 1384

DTC P0171, P0174 FUEL INJECTION SYSTEM FUNCTION 1385
On Board Diagnosis Logic 1385
DTC Confirmation Procedure 1385
Wiring Diagram 1387
Diagnosis Procedure 1390

DTC P0172, P0175 FUEL INJECTION SYSTEM FUNCTION 1394
On Board Diagnosis Logic 1394
DTC Confirmation Procedure 1394
Wiring Diagram 1396
Diagnosis Procedure 1399

DTC P0181 FTT SENSOR 1402
Component Description 1402
On Board Diagnosis Logic 1402
DTC Confirmation Procedure 1402
Wiring Diagram 1403
Diagnosis Procedure 1403
Component Inspection 1405
Removal and Installation 1405

DTC P0182, P0183 FTT SENSOR 1406
Component Description 1406
On Board Diagnosis Logic 1406
DTC Confirmation Procedure 1406
Wiring Diagram 1407

Diagnosis Procedure 1407
Component Inspection 1409
Removal and Installation 1409

DTC P0222, P0223 TP SENSOR 1410
Component Description 1410
CONSULT-III Reference Value in Data Monitor Mode 1410
On Board Diagnosis Logic 1410
DTC Confirmation Procedure 1410
Wiring Diagram 1411
Diagnosis Procedure 1412
Component Inspection 1414
Removal and Installation 1414

DTC P0300 - P0304 MULTIPLE CYLINDER MISFIRE, NO. 1 - 4 CYLINDER MISFIRE 1415
On Board Diagnosis Logic 1415
DTC Confirmation Procedure 1415
Diagnosis Procedure 1416

DTC P0327, P0328 KS 1421
Component Description 1421
On Board Diagnosis Logic 1421
DTC Confirmation Procedure 1421
Wiring Diagram 1422
Diagnosis Procedure 1423
Component Inspection 1424
Removal and Installation 1424

DTC P0335 CKP SENSOR (POS) 1425
Component Description 1425
CONSULT-III Reference Value in Data Monitor Mode 1425
On Board Diagnosis Logic 1425
DTC Confirmation Procedure 1425
Wiring Diagram 1426
Diagnosis Procedure 1427
Component Inspection 1430
Removal and Installation 1430

DTC P0340 CMP SENSOR (PHASE) 1431
Component Description 1431
CONSULT-III Reference Value in Data Monitor Mode 1431
On Board Diagnosis Logic 1431
DTC Confirmation Procedure 1431
Wiring Diagram 1432
Diagnosis Procedure 1433
Component Inspection 1435
Removal and Installation 1436

DTC P0420, P0430 THREE WAY CATALYST FUNCTION 1437
On Board Diagnosis Logic 1437
DTC Confirmation Procedure 1437
Overall Function Check 1438
Diagnosis Procedure 1438

DTC P0441 EVAP CONTROL SYSTEM 1442
System Description 1442
On Board Diagnosis Logic 1442
DTC Confirmation Procedure 1442
Overall Function Check 1443
Diagnosis Procedure 1443
Component Inspection 1446

DTC P0442 EVAP CONTROL SYSTEM 1447
On Board Diagnosis Logic 1447
DTC Confirmation Procedure 1448
Diagnosis Procedure 1448
Component Inspection 1453

DTC P0443 EVAP CANISTER PURGE VOLUME CONTROL SOLENOID VALVE 1454
Description 1454
CONSULT-III Reference Value in Data Monitor Mode 1454
On Board Diagnosis Logic 1455
DTC Confirmation Procedure 1455
Wiring Diagram 1457
Diagnosis Procedure 1458
Component Inspection 1461
Removal and Installation 1461

DTC P0444, P0445 EVAP CANISTER PURGE VOLUME CONTROL SOLENOID VALVE 1462
Description 1462
CONSULT-III Reference Value in Data Monitor Mode 1462
On Board Diagnosis Logic 1463
DTC Confirmation Procedure 1463
Wiring Diagram 1464
Diagnosis Procedure 1465
Component Inspection 1467
Removal and Installation 1467

DTC P0447 EVAP CANISTER VENT CONTROL VALVE 1468
Component Description 1468
CONSULT-III Reference Value in Data Monitor Mode 1468
On Board Diagnosis Logic 1468
DTC Confirmation Procedure 1468
Wiring Diagram 1469
Diagnosis Procedure 1470
Component Inspection 1472

DTC P0448 EVAP CANISTER VENT CONTROL VALVE 1473
Component Description 1473
CONSULT-III Reference Value in Data Monitor Mode 1473
On Board Diagnosis Logic 1473
DTC Confirmation Procedure 1473
Wiring Diagram 1475
Diagnosis Procedure 1476
Component Inspection 1477

DTC P0451 EVAP CONTROL SYSTEM PRESSURE SENSOR 1479
Component Description 1479
CONSULT-III Reference Value in Data Monitor Mode 1479
On Board Diagnosis Logic 1479
DTC Confirmation Procedure 1479
Diagnosis Procedure 1480
Component Inspection 1481

DTC P0452 EVAP CONTROL SYSTEM PRESSURE SENSOR 1482
Component Description 1482
CONSULT-III Reference Value in Data Monitor Mode 1482
On Board Diagnosis Logic 1482
DTC Confirmation Procedure 1482
Wiring Diagram 1484
Diagnosis Procedure 1485
Component Inspection 1488

DTC P0453 EVAP CONTROL SYSTEM PRESSURE SENSOR 1489
Component Description 1489
CONSULT-III Reference Value in Data Monitor Mode 1489
On Board Diagnosis Logic 1489
DTC Confirmation Procedure 1490
Wiring Diagram 1491
Diagnosis Procedure 1492
Component Inspection 1496

DTC P0455 EVAP CONTROL SYSTEM 1497
On Board Diagnosis Logic 1497
DTC Confirmation Procedure 1497
Diagnosis Procedure 1498
Component Inspection 1502

DTC P0456 EVAP CONTROL SYSTEM 1504
On Board Diagnosis Logic 1504
DTC Confirmation Procedure 1505
Overall Function Check 1505
Diagnosis Procedure 1506
Component Inspection 1510

DTC P0460 FUEL LEVEL SENSOR 1512
Component Description 1512
On Board Diagnosis Logic 1512
DTC Confirmation Procedure 1512
Diagnosis Procedure 1512
Removal and Installation 1513

DTC P0461 FUEL LEVEL SENSOR 1514
Component Description 1514
On Board Diagnosis Logic 1514
Overall Function Check 1514
Diagnosis Procedure 1515
Removal and Installation 1515

DTC P0462, P0463 FUEL LEVEL SENSOR ..1516
Component Description 1516
On Board Diagnosis Logic 1516
DTC Confirmation Procedure 1516
Diagnosis Procedure 1516
Removal and Installation 1517

DTC P0500 VSS 1518
Description 1518
On Board Diagnosis Logic 1518
DTC Confirmation Procedure 1518
Overall Function Check 1519
Diagnosis Procedure 1519

DTC P0506 ISC SYSTEM 1520
Description 1520
On Board Diagnosis Logic 1520
DTC Confirmation Procedure 1520
Diagnosis Procedure 1520

DTC P0507 ISC SYSTEM 1522
Description 1522
On Board Diagnosis Logic 1522
DTC Confirmation Procedure 1522
Diagnosis Procedure 1522

DTC P0603 ECM POWER SUPPLY 1524
Component Description 1524
On Board Diagnosis Logic 1524
DTC Confirmation Procedure 1524
Wiring Diagram 1525
Diagnosis Procedure 1526

DTC P0605 ECM 1527
Component Description 1527
On Board Diagnosis Logic 1527
DTC Confirmation Procedure 1527
Diagnosis Procedure 1528

DTC P0607 ECM 1529
Description 1529
On Board Diagnosis Logic 1529
DTC Confirmation Procedure 1529
Diagnosis Procedure 1529

DTC P0643 SENSOR POWER SUPPLY 1530
On Board Diagnosis Logic 1530
DTC Confirmation Procedure 1530
Wiring Diagram 1531
Diagnosis Procedure 1532

DTC P0850 PNP SWITCH 1535
Component Description 1535
CONSULT-III Reference Value in Data Monitor Mode 1535
On Board Diagnosis Logic 1535
DTC Confirmation Procedure 1535
Overall Function Check 1536
Wiring Diagram 1537
Diagnosis Procedure 1538

DTC P1148, P1168 CLOSED LOOP CONTROL 1541
On Board Diagnosis Logic 1541

DTC P1212 TCS COMMUNICATION LINE 1542
Description 1542
On Board Diagnosis Logic 1542
DTC Confirmation Procedure 1542
Diagnosis Procedure 1542

DTC P1217 ENGINE OVER TEMPERATURE 1543
System Description 1543
CONSULT-III Reference Value in Data Monitor Mode 1543
On Board Diagnosis Logic 1544
Overall Function Check 1544
Wiring Diagram 1546
Diagnosis Procedure 1548
Main 12 Causes of Overheating 1553
Component Inspection 1553

DTC P1225 TP SENSOR 1555
Component Description 1555
On Board Diagnosis Logic 1555
DTC Confirmation Procedure 1555
Diagnosis Procedure 1555
Removal and Installation 1556

DTC P1226 TP SENSOR 1557
Component Description 1557
On Board Diagnosis Logic 1557
DTC Confirmation Procedure 1557
Diagnosis Procedure 1557
Removal and Installation 1558

DTC P1421 COLD START CONTROL 1559
Description 1559
On Board Diagnosis Logic 1559
DTC Confirmation Procedure 1559
Diagnosis Procedure 1559

DTC P1564 ASCD STEERING SWITCH 1561
Component Description 1561
CONSULT-III Reference Value in Data Monitor Mode 1561
On Board Diagnosis Logic 1561
DTC Confirmation Procedure 1561
Wiring Diagram 1563
Diagnosis Procedure 1564
Component Inspection 1566

DTC P1572 ASCD BRAKE SWITCH 1567
Component Description 1567
CONSULT-III Reference Value in Data Monitor Mode 1567
On Board Diagnosis Logic 1567
DTC Confirmation Procedure 1568
Wiring Diagram 1569
Diagnosis Procedure 1570
Component Inspection 1574

DTC P1574 ASCD VEHICLE SPEED SENSOR 1576
Component Description 1576
On Board Diagnosis Logic 1576
DTC Confirmation Procedure 1576
Diagnosis Procedure 1576

DTC P1715 INPUT SPEED SENSOR 1578
Description 1578
CONSULT-III Reference Value in Data Monitor Mode 1578
On Board Diagnosis Logic 1578
DTC Confirmation Procedure 1578
Diagnosis Procedure 1578

DTC P1805 BRAKE SWITCH 1580
Description 1580
CONSULT-III Reference Value in Data Monitor Mode 1580
On Board Diagnosis Logic 1580
DTC Confirmation Procedure 1580
Wiring Diagram 1581
Diagnosis Procedure 1582
Component Inspection 1583

DTC P2100, P2103 THROTTLE CONTROL MOTOR RELAY 1584
Component Description 1584
CONSULT-III Reference Value in Data Monitor Mode 1584
On Board Diagnosis Logic 1584
DTC Confirmation Procedure 1584
Wiring Diagram 1585
Diagnosis Procedure 1586

DTC P2101 ELECTRIC THROTTLE CONTROL FUNCTION 1588
Description 1588
On Board Diagnosis Logic 1588
DTC Confirmation Procedure 1588
Wiring Diagram 1589
Diagnosis Procedure 1590
Component Inspection 1593
Removal and Installation 1593

DTC P2118 THROTTLE CONTROL MOTOR 1594
Component Description 1594
On Board Diagnosis Logic 1594
DTC Confirmation Procedure 1594
Wiring Diagram 1595
Diagnosis Procedure 1596
Component Inspection 1597
Removal and Installation 1597

DTC P2119 ELECTRIC THROTTLE CONTROL ACTUATOR 1599
Component Description 1599
On Board Diagnosis Logic 1599
DTC Confirmation Procedure 1599
Diagnosis Procedure 1600

DTC P2122, P2123 APP SENSOR 1601
Component Description 1601
CONSULT-III Reference Value in Data Monitor Mode 1601
On Board Diagnosis Logic 1601
DTC Confirmation Procedure 1601
Wiring Diagram 1602
Diagnosis Procedure 1603
Component Inspection 1605
Removal and Installation 1605

DTC P2127, P2128 APP SENSOR 1606
Component Description 1606
CONSULT-III Reference Value in Data Monitor Mode 1606
On Board Diagnosis Logic 1606
DTC Confirmation Procedure 1607
Wiring Diagram 1608
Diagnosis Procedure 1609
Component Inspection 1611
Removal and Installation 1612

DTC P2135 TP SENSOR 1613
Component Description 1613
CONSULT-III Reference Value in Data Monitor Mode 1613
On Board Diagnosis Logic 1613
DTC Confirmation Procedure 1613
Wiring Diagram 1614
Diagnosis Procedure 1615
Component Inspection 1617
Removal and Installation 1617

DTC P2138 APP SENSOR 1618
Component Description 1618
CONSULT-III Reference Value in Data Monitor Mode 1618
On Board Diagnosis Logic 1618
DTC Confirmation Procedure 1619
Wiring Diagram 1620
Diagnosis Procedure 1621
Component Inspection 1624
Removal and Installation 1624

DTC P2A00, P2A03 A/F SENSOR 1 1625
Component Description 1625
CONSULT-III Reference Value in Data Monitor Mode 1625
On Board Diagnosis Logic 1625
DTC Confirmation Procedure 1625
Wiring Diagram 1627
Diagnosis Procedure 1630
Removal and Installation 1633

ASCD BRAKE SWITCH 1634
Component Description 1634
CONSULT-III Reference Value in Data Monitor Mode 1634
Wiring Diagram 1635
Diagnosis Procedure 1636
Component Inspection 1640

ASCD INDICATOR 1642
Component Description 1642
CONSULT-III Reference Value in Data Monitor Mode 1642
Wiring Diagram 1643
Diagnosis Procedure 1643

ELECTRICAL LOAD SIGNAL 1645
CONSULT-III Reference Value in Data Monitor Mode 1645
Diagnosis Procedure 1645

FUEL INJECTOR 1647
Component Description 1647
CONSULT-III Reference Value in Data Monitor Mode 1647
Wiring Diagram 1648
Diagnosis Procedure 1649
Component Inspection 1651
Removal and Installation 1651

FUEL PUMP 1652
Description 1652
CONSULT-III Reference Value in Data Monitor Mode 1652
Wiring Diagram 1653
Diagnosis Procedure 1654
Component Inspection 1656
Removal and Installation 1656

IGNITION SIGNAL 1657
Component Description 1657
Wiring Diagram 1658
Diagnosis Procedure 1661
Component Inspection 1664
Removal and Installation 1665

REFRIGERANT PRESSURE SENSOR 1666
Component Description 1666
Wiring Diagram 1667
Diagnosis Procedure 1668
Removal and Installation 1670

MIL AND DATA LINK CONNECTOR 1671
Wiring Diagram 1671

SERVICE DATA AND SPECIFICATIONS (SDS) 1673
Fuel Pressure 1673
Idle Speed and Ignition Timing 1673
Calculated Load Value 1673
Mass Air Flow Sensor 1673
Intake Air Temperature Sensor 1673
Engine Coolant Temperature Sensor 1673
Air Fuel Ratio (A/F) Sensor 1 Heater 1673
Heated Oxygen sensor 2 Heater 1674
Crankshaft Position Sensor (POS) 1674
Camshaft Position Sensor (PHASE) 1674
Throttle Control Motor 1674

Fuel Injector 1674
Fuel Pump 1674

SERVICE INFORMATION

INDEX FOR DTC

U0101-U1001

INFOID:0000000005284520

DTC*1		Items (CONSULT-III screen terms)	Reference page
CONSULT-III GST*2	ECM*3		
U0101	0101*4	LOST COMM (TCM)	EC-159
U0140	0140*4	LOST COMM (BCM)	EC-161
U1001	1001*4	CAN COMM CIRCUIT	EC-163

*1: 1st trip DTC No. is the same as DTC No.
*2: This number is prescribed by SAE J2012/ISO 15031-6.
*3: In Diagnostic Test Mode II (Self-diagnostic results), this number is controlled by NISSAN.
*4: The troubleshooting for this DTC needs CONSULT-III.

P0011-P0075

INFOID:0000000005284521

DTC*1		Items (CONSULT-III screen terms)	Reference page
CONSULT-III GST*2	ECM*3		
P0011	0011	INT/V TIM CONT-B1	EC-165
P0031	0031	A/F SEN1 HTR (B1)	EC-169
P0032	0032	A/F SEN1 HTR (B1)	EC-169
P0037	0037	HO2S2 HTR (B1)	EC-174
P0038	0038	HO2S2 HTR (B1)	EC-174
P0075	0075	INT/V TIM V/CIR-B1	EC-180

*1: 1st trip DTC No. is the same as DTC No.
*2: This number is prescribed by SAE J2012/ISO 15031-6.
*3: In Diagnostic Test Mode II (Self-diagnostic results), this number is controlled by NISSAN.

P0101-P0128

INFOID:0000000005284522

DTC*1		Items (CONSULT-III screen terms)	Reference page
CONSULT-III GST*2	ECM*3		
P0101	0101	MAF SEN/CIRCUIT-B1	EC-185
P0102	0102	MAF SEN/CIRCUIT-B1	EC-193
P0103	0103	MAF SEN/CIRCUIT-B1	EC-193
P0112	0112	IAT SEN/CIRCUIT-B1	EC-200
P0113	0113	IAT SEN/CIRCUIT-B1	EC-200
P0116	0116	ECT SEN/CIRC	EC-204
P0117	0117	ECT SEN/CIRC	EC-207
P0118	0118	ECT SEN/CIRC	EC-207
P0122	0122	TP SEN 2/CIRC-B1	EC-212
P0123	0123	TP SEN 2/CIRC-B1	EC-212
P0125	0125	ECT SENSOR	EC-217

DTC*1		Items (CONSULT-III screen terms)	Reference page
CONSULT-III GST*2	ECM*3		
P0127	0127	IAT SENSOR-B1	EC-220
P0128	0128	THERMSTAT FNCTN	EC-223

*1: 1st trip DTC No. is the same as DTC No.
*2: This number is prescribed by SAE J2012/ISO 15031-6.
*3: In Diagnostic Test Mode II (Self-diagnostic results), this number is controlled by NISSAN.

P0130-P0198

INFOID:0000000005284523

DTC*1		Items (CONSULT-III screen terms)	Reference page
CONSULT-III GST*2	ECM*3		
P0130	0130	A/F SENSOR1 (B1)	EC-225
P0131	0131	A/F SENSOR1 (B1)	EC-231
P0132	0132	A/F SENSOR1 (B1)	EC-237
P0133	0133	A/F SENSOR1 (B1)	EC-243
P0137	0137	HO2S2 (B1)	EC-250
P0138	0138	HO2S2 (B1)	EC-257
P0139	0139	HO2S2 (B1)	EC-266
P0171	0171	FUEL SYS-LEAN-B1	EC-275
P0172	0172	FUEL SYS-RICH-B1	EC-281
P0181	0181	FTT SENSOR	EC-287
P0182	0182	FTT SEN/CIRCUIT	EC-291
P0183	0183	FTT SEN/CIRCUIT	EC-291
P0196	0196	EOT SEN/CIRC	EC-295
P0197	0197	EOT SEN/CIRC	EC-298
P0198	0198	EOT SEN/CIRC	EC-298

*1: 1st trip DTC No. is the same as DTC No.
*2: This number is prescribed by SAE J2012/ISO 15031-6.
*3: In Diagnostic Test Mode II (Self-diagnostic results), this number is controlled by NISSAN.

P0222-P0420

INFOID:0000000005284524

DTC*1		Items (CONSULT-III screen terms)	Reference page
CONSULT-III GST*2	ECM*3		
P0222	0222	TP SEN 1/CIRC-B1	EC-302
P0223	0223	TP SEN 1/CIRC-B1	EC-302
P0300	0300	MULTI CYL MISFIRE	EC-307
P0301	0301	CYL 1 MISFIRE	EC-307
P0302	0302	CYL 2 MISFIRE	EC-307
P0303	0303	CYL 3 MISFIRE	EC-307
P0304	0304	CYL 4 MISFIRE	EC-307
P0327	0327	KNOCK SEN/CIRC-B1	EC-313
P0328	0328	KNOCK SEN/CIRC-B1	EC-313

DTC*1		Items (CONSULT-III screen terms)	Reference page
CONSULT-III GST*2	ECM*3		
P0335	0335	CKP SEN/CIRCUIT	EC-317
P0340	0340	CMP SEN/CIRC-B1	EC-324
P0420	0420	TW CATALYST SYS-B1	EC-330

*1: 1st trip DTC No. is the same as DTC No.
*2: This number is prescribed by SAE J2012/ISO 15031-6.
*3: In Diagnostic Test Mode II (Self-diagnostic results), this number is controlled by NISSAN.

P0441-P0463

INFOID:0000000005284525

DTC*1		Items (CONSULT-III screen terms)	Reference page
CONSULT-III GST*2	ECM*3		
P0441	0441	EVAP PURG FLOW/MON	EC-335
P0442	0442	EVAP SMALL LEAK	EC-340
P0443	0443	PURG VOLUME CONT/V	EC-347
P0444	0444	PURG VOLUME CONT/V	EC-355
P0445	0445	PURG VOLUME CONT/V	EC-355
P0447	0447	VENT CONTROL VALVE	EC-361
P0448	0448	VENT CONTROL VALVE	EC-367
P0451	0451	EVAP SYS PRES SEN	EC-373
P0452	0452	EVAP SYS PRES SEN	EC-376
P0453	0453	EVAP SYS PRES SEN	EC-383
P0455	0455	EVAP GROSS LEAK	EC-391
P0456	0456	EVAP VERY SML LEAK	EC-398
P0460	0460	FUEL LEV SEN SLOSH	EC-406
P0461	0461	FUEL LEVEL SENSOR	EC-408
P0462	0462	FUEL LEVL SEN/CIRC	EC-410
P0463	0463	FUEL LEVL SEN/CIRC	EC-410

*1: 1st trip DTC No. is the same as DTC No.
*2: This number is prescribed by SAE J2012/ISO 15031-6.
*3: In Diagnostic Test Mode II (Self-diagnostic results), this number is controlled by NISSAN.

P0500-P0643

INFOID:0000000005284526

DTC*1		Items (CONSULT-III screen terms)	Reference page
CONSULT-III GST*2	ECM*3		
P0500	0500	VEH SPEED SEN/CIRC	EC-412
P0506	0506	ISC SYSTEM	EC-414
P0507	0507	ISC SYSTEM	EC-416
P0603	0603	ECM BACK UP/CIRCUIT	EC-418
P0605	0605	ECM	EC-421
P0607	0607	ECM	EC-423
P0643	0643	SENSOR POWER/CIRC	EC-424

*1: 1st trip DTC No. is the same as DTC No.
*2: This number is prescribed by SAE J2012/ISO 15031-6.
*3: In Diagnostic Test Mode II (Self-diagnostic results), this number is controlled by NISSAN.

P0705-P0840

INFOID:0000000005284527

DTC*1		Items (CONSULT-III screen terms)	Reference page
CONSULT-III GST*2	ECM*3		
P0705	0705	T/M RANGE SENSOR A	CVT-60
P0710	0710	FLUID TEMP SENSOR A*4	CVT-65
P0715	0715	INPUT SPEED SENSOR A	CVT-70
P0720	0720	OUTPUT SPEED SENSOR	CVT-75
P0740	0740	TORQUE CONVERTER	CVT-83
P0744	0744	TORQUE CONVERTER	CVT-88
P0745	0745	PC SOLENOID A	CVT-90
P0746	0746	PC SOLENOID A	CVT-95
P0776	0776	PC SOLENOID B	CVT-97
P0778	0778	PC SOLENOID B	CVT-99
P0840	0840	FLUID PRESS SEN/SW A	CVT-109

*1: 1st trip DTC No. is the same as DTC No.
*2: This number is prescribed by SAE J2012/ISO 15031-6.
*3: In Diagnostic Test Mode II (Self-diagnostic results), this number is controlled by NISSAN.
*4: When erasing this DTC, always use CONSULT-III or GST.

P0850-P1574

INFOID:0000000005284528

DTC*1		Items (CONSULT-III screen terms)	Reference page
CONSULT-III GST*2	ECM*3		
P0850	0850	P-N POS SW/CIRCUIT	EC-429
P1148	1148	CLOSED LOOP-B1	EC-434
P1212	1212	TCS/CIRC	EC-435
P1217	1217	ENG OVER TEMP	EC-436
P1225	1225	CTP LEARNING-B1	EC-448
P1226	1226	CTP LEARNING-B1	EC-450
P1421	1421	COLD START CONTROL	EC-452
P1564	1564	ASCD SW	EC-454
P1572	1572	ASCD BRAKE SW	EC-460
P1574	1574	ASCD VHL SPD SEN	EC-469

*1: 1st trip DTC No. is the same as DTC No.
*2: This number is prescribed by SAE J2012/ISO 15031-6.
*3: In Diagnostic Test Mode II (Self-diagnostic results), this number is controlled by NISSAN.

P1610-P1615

INFOID:0000000005284529

DTC*1		Items (CONSULT-III screen terms)	Reference page
CONSULT-III GST*2	ECM*3		
P1610	1610	LOCK MODE	BL-170
P1611	1611	ID DISCORD, IMM-ECM	
P1612	1612	CHAIN OF ECM-IMMU	
P1614	1614	CHAIN OF IMMU-KEY	
P1615	1615	DIFFERENCE OF KEY	

*1: 1st trip DTC No. is the same as DTC No.
*2: This number is prescribed by SAE J2012/ISO 15031-6.
*3: In Diagnostic Test Mode II (Self-diagnostic results), this number is controlled by NISSAN.

P1715-P1805

INFOID:0000000005284530

DTC*1		Items (CONSULT-III screen terms)	Reference page
CONSULT-III GST*2	ECM*3		
P1715	1715	IN PULY SPEED	EC-471
P1740	1740	SLCT SOLENOID	CVT-128
P1777	1777	STEP MOTOR	CVT-134
P1778	1778	STEP MOTOR	CVT-138
P1805	1805	BRAKE SW/CIRCUIT	EC-473

*1: 1st trip DTC No. is the same as DTC No.
*2: This number is prescribed by SAE J2012/ISO 15031-6.
*3: In Diagnostic Test Mode II (Self-diagnostic results), this number is controlled by NISSAN.

P2004-P2A00

INFOID:0000000005284531

DTC*1		Items (CONSULT-III screen terms)	Reference page
CONSULT-III GST*2	ECM*3		
P2004	2004	TUMBLE CONT/V	EC-478
P2014	2014	TUMBLE POS SEN	EC-485
P2100	2100	ETC MOT PWR-B1	EC-491
P2101	2101	ETC FNCTN/CIRC-B1	EC-495
P2103	2103	ETC MOT PWR	EC-491
P2118	2118	ETC MOT-B1	EC-501
P2119	2119	ETC ACTR-B1	EC-505
P2122	2122	APP SEN 1/CIRC	EC-507
P2123	2123	APP SEN 1/CIRC	EC-507
P2127	2127	APP SEN 2/CIRC	EC-512
P2128	2128	APP SEN 2/CIRC	EC-512
P2135	2135	TP SENSOR-B1	EC-519
P2138	2138	APP SENSOR	EC-524
P2A00	2A00	A/F SENSOR1 (B1)	EC-531

*1: 1st trip DTC No. is the same as DTC No.
*2: This number is prescribed by SAE J2012/ISO 15031-6.
*3: In Diagnostic Test Mode II (Self-diagnostic results), this number is controlled by NISSAN.

PRECAUTIONS

Precaution for Supplemental Restraint System (SRS) "AIR BAG" and "SEAT BELT PRE-TENSIONER"

INFOID:0000000006039470

The Supplemental Restraint System such as “AIR BAG” and “SEAT BELT PRE-TENSIONER”, used along with a front seat belt, helps to reduce the risk or severity of injury to the driver and front passenger for certain types of collision. This system includes seat belt switch inputs and dual stage front air bag modules. The SRS system uses the seat belt switches to determine the front air bag deployment, and may only deploy one front air bag, depending on the severity of a collision and whether the front occupants are belted or unbelted.
Information necessary to service the system safely is included in the SRS and SB section of this Service Manual.

WARNING:

- **To avoid rendering the SRS inoperative, which could increase the risk of personal injury or death in the event of a collision which would result in air bag inflation, all maintenance must be performed by an authorized NISSAN/INFINITI dealer.**
- **Improper maintenance, including incorrect removal and installation of the SRS, can lead to personal injury caused by unintentional activation of the system. For removal of Spiral Cable and Air Bag Module, see the SRS section.**
- **Do not use electrical test equipment on any circuit related to the SRS unless instructed to in this Service Manual. SRS wiring harnesses can be identified by yellow and/or orange harnesses or harness connectors.**

PRECAUTIONS WHEN USING POWER TOOLS (AIR OR ELECTRIC) AND HAMMERS

WARNING:

- **When working near the Airbag Diagnosis Sensor Unit or other Airbag System sensors with the Ignition ON or engine running, DO NOT use air or electric power tools or strike near the sensor(s) with a hammer. Heavy vibration could activate the sensor(s) and deploy the air bag(s), possibly causing serious injury.**
- **When using air or electric power tools or hammers, always switch the Ignition OFF, disconnect the battery, and wait at least 3 minutes before performing any service.**

On Board Diagnosis (OBD) System of Engine and CVT

INFOID:0000000005284533

The ECM has an on board diagnostic system. It will light up the malfunction indicator lamp (MIL) to warn the driver of a malfunction causing emission deterioration.

CAUTION:

- **Be sure to turn the ignition switch OFF and disconnect the battery ground cable before any repair or inspection work. The open/short circuit of related switches, sensors, solenoid valves, etc. will cause the MIL to light up.**
- **Be sure to connect and lock the connectors securely after work. A loose (unlocked) connector will cause the MIL to light up due to the open circuit. (Be sure the connector is free from water, grease, dirt, bent terminals, etc.)**
- **Certain systems and components, especially those related to OBD, may use a new style slide-locking type harness connector. For description and how to disconnect, refer to PG-59 .**
- **Be sure to route and secure the harnesses properly after work. The interference of the harness with a bracket, etc. may cause the MIL to light up due to the short circuit.**
- **Be sure to connect rubber tubes properly after work. A misconnected or disconnected rubber tube may cause the MIL to light up due to the malfunction of the EVAP system or fuel injection system, etc.**
- **Be sure to erase the unnecessary malfunction information (repairs completed) from the ECM and TCM (Transmission control module) before returning the vehicle to the customer.**

Precaution

INFOID:0000000005284534

- **Always use a 12 V battery as power source.**
- **Do not attempt to disconnect battery cables while engine is running.**
- **Before connecting or disconnecting the ECM harness connector, turn ignition switch OFF and disconnect negative battery cable. Failure to do so may damage the ECM because battery voltage is applied to ECM even if ignition switch is turned OFF.**
- **Before removing parts, turn ignition switch OFF and then disconnect negative battery cable.**

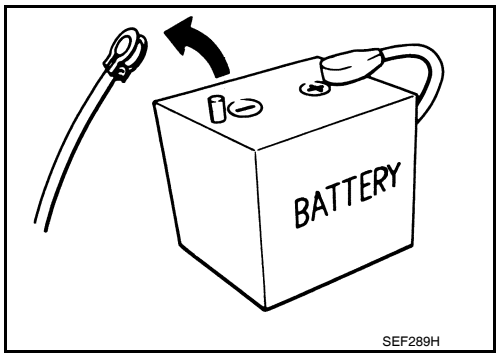

- **Do not disassemble ECM.**
- **If battery cable is disconnected, the memory will return to the initial ECM values.**
  The ECM will now start to self-control at its initial values. Engine operation can vary slightly in this case. However, this is not an indication of a malfunction. Do not replace parts because of a slight variation.
- **If the battery is disconnected, the following emission-related diagnostic information will be lost within 24 hours.**
- **Diagnostic trouble codes**
- **1st trip diagnostic trouble codes**
- **Freeze frame data**
- **1st trip freeze frame data**
- **System readiness test (SRT) codes**
- **Test values**

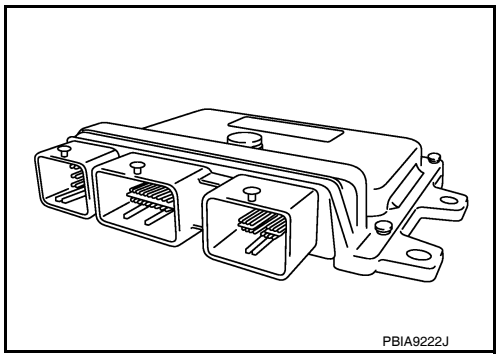

- **When connecting ECM harness connector, fasten (B) it securely with a lever (1) as far as it will go as shown in the figure.**
- **ECM (2)**
- **Loosen (A)**

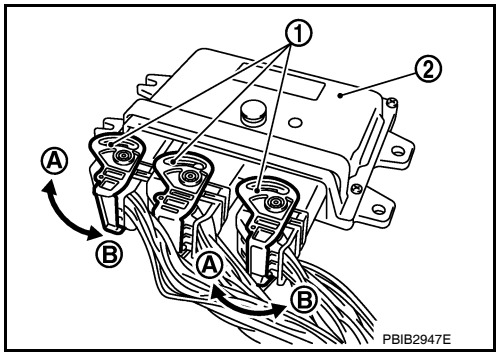

- **When connecting or disconnecting pin connectors into or from ECM, take care not to damage pin terminals (bend or break).**
  Make sure that there are not any bends or breaks on ECM pin terminal, when connecting pin connectors.
- **Securely connect ECM harness connectors.**
  A poor connection can cause an extremely high (surge) voltage to develop in coil and condenser, thus resulting in damage to ICs.
- **Keep engine control system harness at least 10 cm (4 in) away from adjacent harness, to prevent engine control system malfunctions due to receiving external noise, degraded operation of ICs, etc.**
- **Keep engine control system parts and harness dry.**

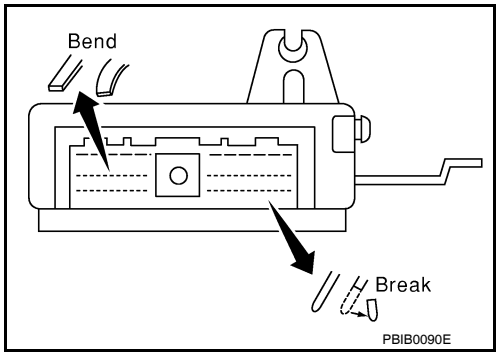

- **Before replacing ECM, perform "ECM Terminals and Reference Value" inspection and make sure ECM functions properly. Refer to EC-124, "ECM Terminal and Reference Value" .**
- **Handle mass air flow sensor carefully to avoid damage.**
- **Do not disassemble mass air flow sensor.**
- **Do not clean mass air flow sensor with any type of detergent.**
- **Do not disassemble electric throttle control actuator.**
- **Even a slight leak in the air intake system can cause serious incidents.**
- **Do not shock or jar the camshaft position sensor (PHASE), crankshaft position sensor (POS).**
- **After performing each TROUBLE DIAGNOSIS, perform DTC Confirmation Procedure or Overall Function Check.**
  The DTC should not be displayed in the DTC Confirmation Procedure if the repair is completed. The Overall Function Check should be a good result if the repair is completed.

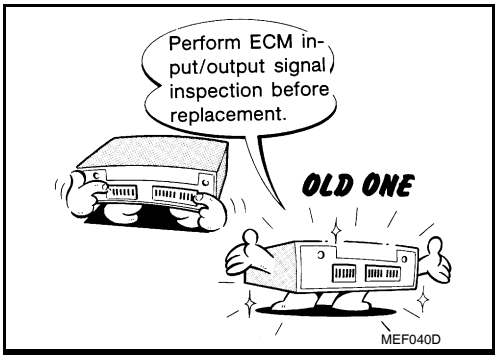

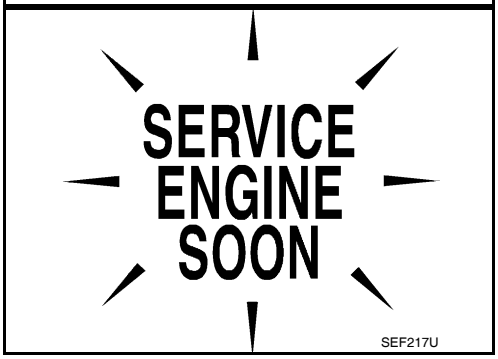

- **When measuring ECM signals with a circuit tester, never allow the two tester probes to contact.**
  Accidental contact of probes will cause a short circuit and damage the ECM power transistor.

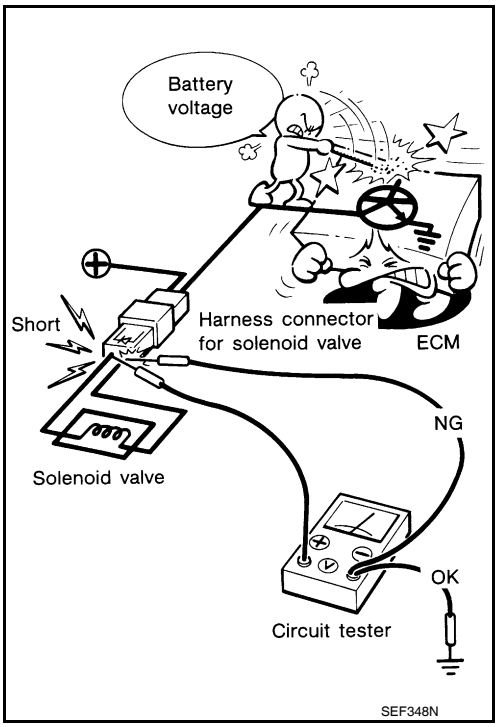

- **Do not operate fuel pump when there is no fuel in lines.**
- **Fuel level sensor unit and fuel pump (1)**
- **Fuel pressure regulator (2)**
- **Fuel level sensor (3)**
- **Fuel tank temperature sensor (4)**
- **Tighten fuel hose clamps to the specified torque.**

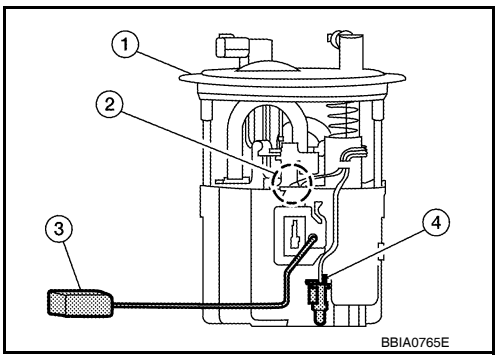

- **Do not depress accelerator pedal when starting.**
- **Immediately after starting, do not rev up engine unnecessarily.**
- **Do not rev up engine just prior to shutdown.**

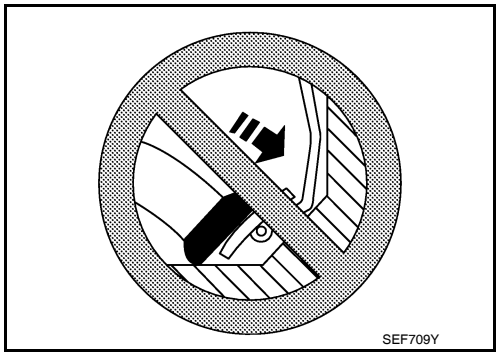

- **When installing C.B. ham radio or a mobile phone, be sure to observe the following as it may adversely affect electronic control systems depending on installation location.**
  - **Keep the antenna as far as possible from the electronic control units.**
  - **Keep the antenna feeder line more than 20 cm (8 in) away from the harness of electronic controls.**
    Do not let them run parallel for a long distance.
  - **Adjust the antenna and feeder line so that the standing-wave radio can be kept smaller.**
  - **Be sure to ground the radio to vehicle body.**

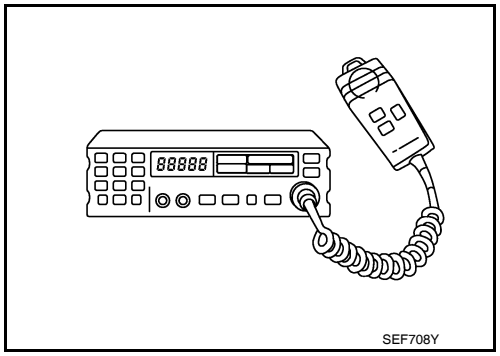

PREPARATION

Special Service Tool

INFOID:0000000005284535

The actual shapes of Kent-Moore tools may differ from those of special service tools illustrated here.

Tool number (Kent-Moore No.) Tool name	Description
(J-44321) Fuel pressure gauge Kit 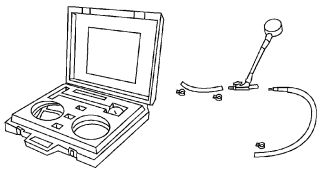 LEC642	Checking fuel pressure
(J-44321-6) Fuel pressure adapter 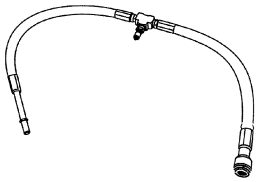 LBIA0376E	Connecting fuel pressure gauge to quick connector type fuel lines.
KV10118400 Fuel tube adapter 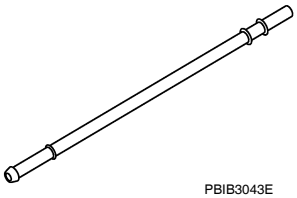 PBIB3043E	Measuring fuel pressure

Commercial Service Tool

INFOID:0000000005284536

Tool number (Kent-Moore No.) Tool name	Description
Leak detector i.e.: (J-41416) 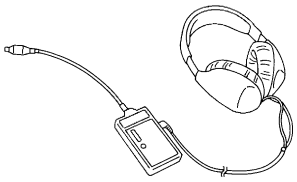 S-NT703	Locating the EVAP leak
EVAP service port adapter i.e.: (J-41413-OBD) 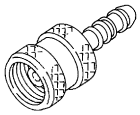 S-NT704	Applying positive pressure through EVAP service port

Tool number (Kent-Moore No.) Tool name	Description
Fuel filler cap adapter i.e.: (MLR-8382) S-NT815	Checking fuel tank vacuum relief valve opening pressure
Socket wrench 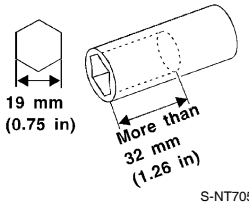 S-NT705	Removing and installing engine coolant temperature sensor
Oxygen sensor thread cleaner i.e.: (J-43897-18) (J-43897-12) 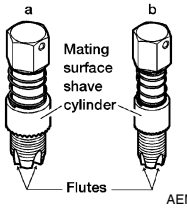 AEM488	Reconditioning the exhaust system threads before installing a new oxygen sensor. Use with anti-seize lubricant shown below. **a: 18 mm diameter with pitch 1.5 mm for Zirconia Oxygen Sensor** **b: 12 mm diameter with pitch 1.25 mm for Titania Oxygen Sensor**
Anti-seize lubricant i.e.: (Permatex™ 133AR or equivalent meeting MIL specification MIL-A-907) 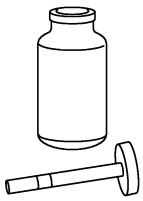 S-NT779	Lubricating oxygen sensor thread cleaning tool when reconditioning exhaust system threads.

ENGINE CONTROL SYSTEM

Schematic

INFOID:0000000005284537

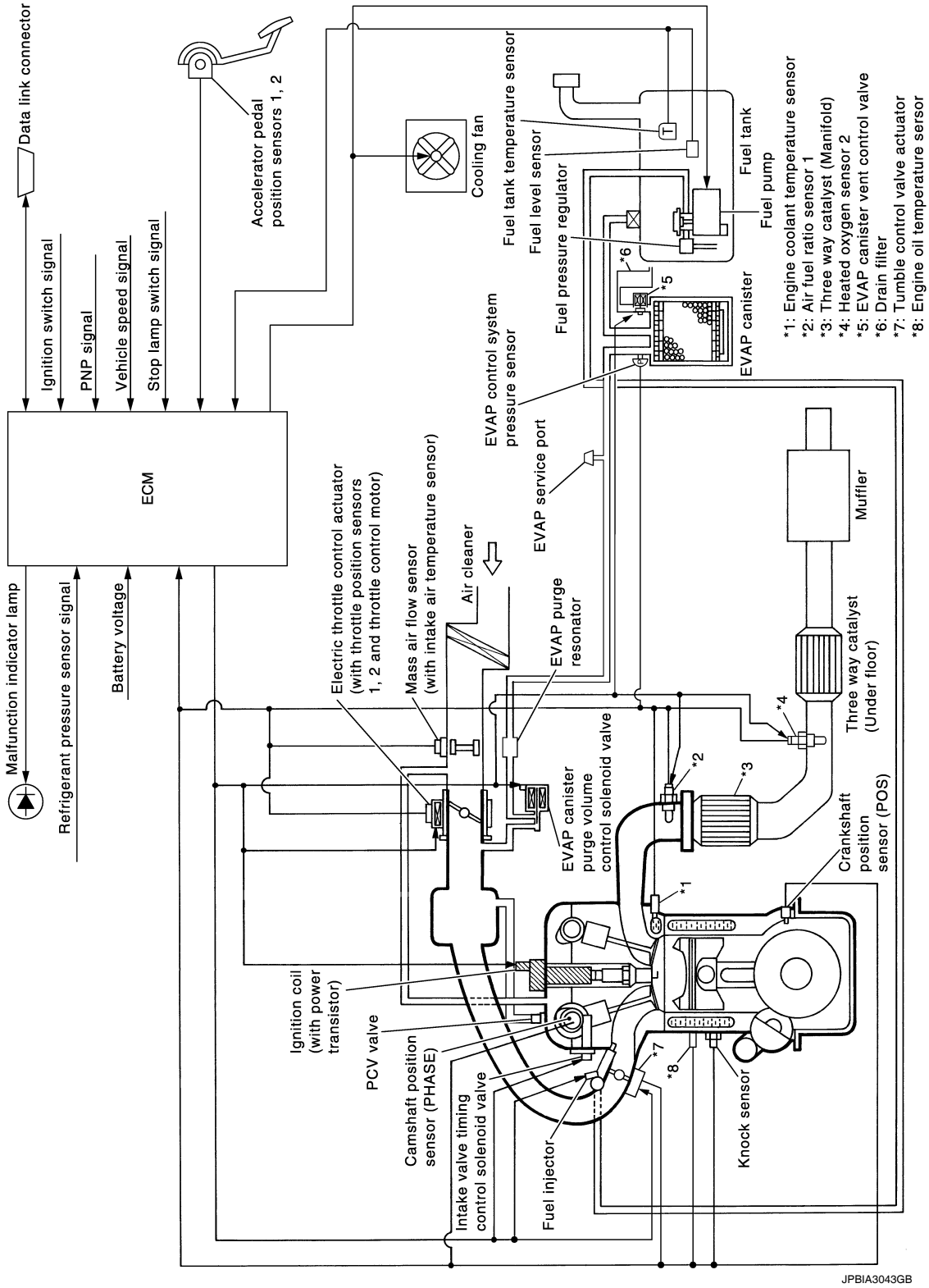

Multiport Fuel Injection (MFI) System

INFOID:0000000005284538

INPUT/OUTPUT SIGNAL CHART

Sensor	Input Signal to ECM	ECM function	Actuator
Crankshaft position sensor (POS)	Engine speed*3 Piston position	Fuel injection & mixture ratio control	Fuel injector
Camshaft position sensor (PHASE)			
Mass air flow sensor	Amount of intake air		
Engine coolant temperature sensor	Engine coolant temperature		
Air fuel ratio (A/F) sensor 1	Density of oxygen in exhaust gas		
Throttle position sensor	Throttle position		
Accelerator pedal position sensor	Accelerator pedal position		
Park/neutral position (PNP) switch (M/T) Transmission range switch (CVT)	Gear position		
Battery	Battery voltage*3		
Knock sensor	Engine knocking condition		
EPS control unit	Power steering operation*2		
Heated oxygen sensor 2*1	Density of oxygen in exhaust gas		
Air conditioner switch	Air conditioner operation*2		
ABS actuator and electric unit (control unit)	Vehicle speed*2		
Combination meter			

*1: This sensor is not used to control the engine system under normal conditions.

*2: This signal is sent to the ECM through CAN communication line.

*3: ECM determines the start signal status by the signals of engine speed and battery voltage.

SYSTEM DESCRIPTION

The amount of fuel injected from the fuel injector is determined by the ECM. The ECM controls the length of time the valve remains open (injection pulse duration). The amount of fuel injected is a program value in the ECM memory. The program value is preset by engine operating conditions. These conditions are determined by input signals (for engine speed and intake air) from the crankshaft position sensor (POS), camshaft position sensor (PHASE) and the mass air flow sensor.

VARIOUS FUEL INJECTION INCREASE/DECREASE COMPENSATION

In addition, the amount of fuel injected is compensated to improve engine performance under various operating conditions as listed below.

<Fuel increase>
- During warm-up
- When starting the engine
- During acceleration
- Hot-engine operation
- When selector lever is changed from N to D (CVT models)
- High-load, high-speed operation

<Fuel decrease>
- During deceleration
- During high engine speed operation

MIXTURE RATIO FEEDBACK CONTROL (CLOSED LOOP CONTROL)

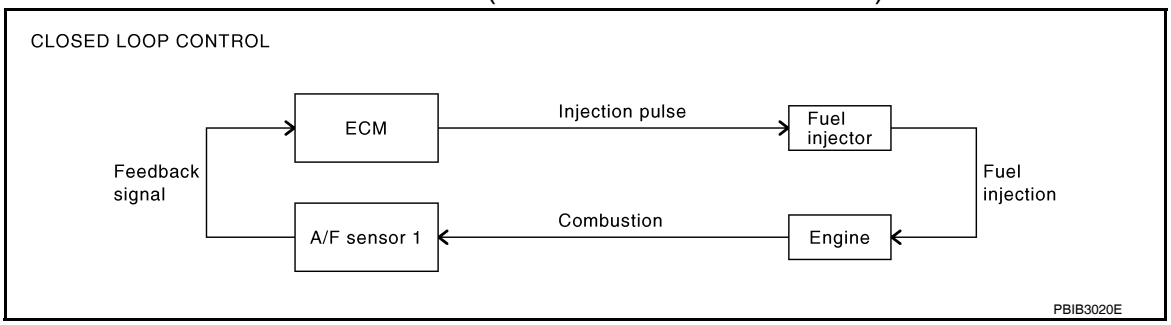

The mixture ratio feedback system provides the best air/fuel mixture ratio for drivability and emission control. The three way catalyst (manifold) can then better reduce CO, HC and NOx emissions. This system uses air fuel ratio (A/F) sensor 1 in the exhaust manifold to monitor whether the engine operation is rich or lean. The ECM adjusts the injection pulse width according to the sensor voltage signal. For more information about air fuel ratio (A/F) sensor 1, refer to EC-231. This maintains the mixture ratio within the range of stoichiometric (ideal air/fuel mixture).
This stage is referred to as the closed loop control condition.
Heated oxygen sensor 2 is located downstream of the three way catalyst (manifold). Even if the switching characteristics of air fuel ratio (A/F) sensor 1 shift, the air/fuel ratio is controlled to stoichiometric by the signal from heated oxygen sensor 2.

Open Loop Control
The open loop system condition refers to when the ECM detects any of the following conditions. Feedback control stops in order to maintain stabilized fuel combustion.
- Deceleration and acceleration
- High-load, high-speed operation
- Malfunction of air fuel ratio (A/F) sensor 1 or its circuit
- Insufficient activation of air fuel ratio (A/F) sensor 1 at low engine coolant temperature
- High engine coolant temperature
- During warm-up
- After shifting from N to D (CVT models)
- When starting the engine

MIXTURE RATIO SELF-LEARNING CONTROL
The mixture ratio feedback control system monitors the mixture ratio signal transmitted from air fuel ratio (A/F) sensor 1. This feedback signal is then sent to the ECM. The ECM controls the basic mixture ratio as close to the theoretical mixture ratio as possible. However, the basic mixture ratio is not necessarily controlled as originally designed. Both manufacturing differences (i.e., mass air flow sensor hot wire) and characteristic changes during operation (i.e., fuel injector clogging) directly affect mixture ratio.
Accordingly, the difference between the basic and theoretical mixture ratios is monitored in this system. This is then computed in terms of “injection pulse duration” to automatically compensate for the difference between the two ratios.
“Fuel trim” refers to the feedback compensation value compared against the basic injection duration. Fuel trim includes short term fuel trim and long term fuel trim.
“Short term fuel trim” is the short-term fuel compensation used to maintain the mixture ratio at its theoretical value. The signal from air fuel ratio (A/F) sensor 1 indicates whether the mixture ratio is RICH or LEAN compared to the theoretical value. The signal then triggers a reduction in fuel volume if the mixture ratio is rich, and an increase in fuel volume if it is lean.
“Long term fuel trim” is overall fuel compensation carried out long-term to compensate for continual deviation of the short term fuel trim from the central value. Such deviation will occur due to individual engine differences, wear over time and changes in the usage environment.

FUEL INJECTION TIMING
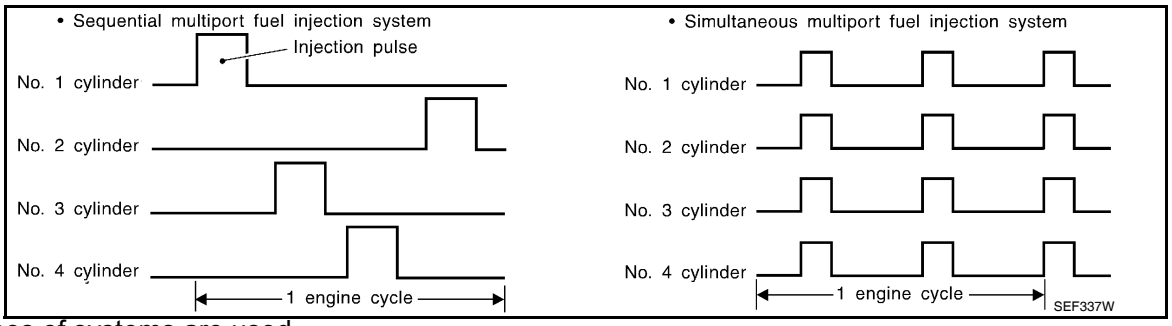

Two types of systems are used.

Sequential Multiport Fuel Injection System
Fuel is injected into each cylinder during each engine cycle according to the firing order. This system is used when the engine is running.

Simultaneous Multiport Fuel Injection System
Fuel is injected simultaneously into all four cylinders twice each engine cycle. In other words, pulse signals of the same width are simultaneously transmitted from the ECM.
The four fuel injectors will then receive the signals two times for each engine cycle.

This system is used when the engine is being started and/or if the fail-safe system (CPU) is operating.

FUEL SHUT-OFF

Fuel to each cylinder is cut off during deceleration, operation of the engine at excessively high speeds or operation of the vehicle at excessively high speeds.

Electronic Ignition (EI) System

INFOID:0000000005284539

INPUT/OUTPUT SIGNAL CHART

Sensor	Input Signal to ECM	ECM function	Actuator
Crankshaft position sensor (POS)	Engine speed*2 Piston position	Ignition timing control	Power transistor
Camshaft position sensor (PHASE)			
Mass air flow sensor	Amount of intake air		
Engine coolant temperature sensor	Engine coolant temperature		
Throttle position sensor	Throttle position		
Accelerator pedal position sensor	Accelerator pedal position		
Battery	Battery voltage*2		
Knock sensor	Engine knocking		
Park/neutral position (PNP) switch (M/T) Transmission range switch (CVT)	Gear position		
ABS actuator and electric unit (control unit)	Vehicle speed*1		
Combination meter			

*1: This signal is sent to the ECM through CAN communication line.

*2: ECM determines the start signal status by the signals of engine speed and battery voltage.

SYSTEM DESCRIPTION

Firing order: 1 - 3 - 4 - 2

The ignition timing is controlled by the ECM to maintain the best air-fuel ratio for every running condition of the engine. The ignition timing data is stored in the ECM.

The ECM receives information such as the injection pulse width and camshaft position sensor (PHASE) signal. Computing this information, ignition signals are transmitted to the power transistor.

During the following conditions, the ignition timing is revised by the ECM according to the other data stored in the ECM.

- At starting
- During warm-up
- At idle
- At low battery voltage
- During acceleration

The knock sensor retard system is designed only for emergencies. The basic ignition timing is programmed within the anti-knocking zone, if recommended fuel is used under dry conditions. The retard system does not operate under normal driving conditions. If engine knocking occurs, the knock sensor monitors the condition. The signal is transmitted to the ECM. The ECM retards the ignition timing to eliminate the knocking condition.

Fuel Cut Control (at No Load and High Engine Speed)

INFOID:0000000005284540

INPUT/OUTPUT SIGNAL CHART

Sensor	Input Signal to ECM	ECM function	Actuator
Park/neutral position (PNP) switch (M/T) Transmission range switch (CVT)	Neutral position	Fuel cut control	Fuel injector
Accelerator pedal position sensor	Accelerator pedal position		
Engine coolant temperature sensor	Engine coolant temperature		
Crankshaft position sensor (POS) Camshaft position sensor (PHASE)	Engine speed		
ABS actuator and electric unit (control unit)	Vehicle speed*		
Combination meter			

*: This signal is sent to the ECM through CAN communication line.

SYSTEM DESCRIPTION

If the engine speed is above 2,000 rpm under no load (for example, the shift lever position is P or N (CVT), Neutral (M/T) and engine speed is over 2,400 rpm) fuel will be cut off after some time. The exact time when the fuel is cut off varies based on engine speed.
Fuel cut will be operated until the engine speed reaches 1,500 rpm, then fuel cut will be cancelled.
NOTE:
This function is different from deceleration control listed under EC-36, "Multiport Fuel Injection (MFI) System".

AIR CONDITIONING CUT CONTROL

Input/Output Signal Chart

INFOID:0000000005284541

Sensor	Input Signal to ECM	ECM function	Actuator
Air conditioner switch	Air conditioner ON signal*1	Air conditioner cut control	Air conditioner relay
Accelerator pedal position sensor	Accelerator pedal position		
Crankshaft position sensor (POS) Camshaft position sensor (PHASE)	Engine speed*2		
Engine coolant temperature sensor	Engine coolant temperature		
Battery	Battery voltage*2		
Refrigerant pressure sensor	Refrigerant pressure		
EPS control unit	Power steering operation*1		
ABS actuator and electric unit (control unit)	Vehicle speed*1		
Combination meter			

*1: This signal is sent to the ECM through CAN communication line.

*2: ECM determines the start signal status by the signals of engine speed and battery voltage.

System Description

INFOID:0000000005284542

This system improves engine operation when the air conditioner is used.
Under the following conditions, the air conditioner is turned off.
- When the accelerator pedal is fully depressed.
- When cranking the engine.
- At high engine speeds.
- When the engine coolant temperature becomes excessively high.
- When operating power steering during low engine speed or low vehicle speed.
- When engine speed is excessively low.
- When refrigerant pressure is excessively low or high.

AUTOMATIC SPEED CONTROL DEVICE (ASCD)

System Description

INFOID:0000000005284543

INPUT/OUTPUT SIGNAL CHART

Sensor	Input signal to ECM	ECM function	Actuator
ASCD brake switch	Brake pedal operation	ASCD vehicle speed control	Electric throttle control actuator
Stop lamp switch	Brake pedal operation		
ASCD clutch switch (M/T models)	Clutch pedal operation		
ASCD steering switch	ASCD steering switch operation		
Park/neutral position (PNP) switch (M/T) Transmission range switch (CVT)	Gear position		
ABS actuator and electric unit (control unit)	Vehicle speed*		
Combination meter			
TCM (CVT models)	Powertrain revolution*		

*: This signal is sent to the ECM through CAN communication line.

BASIC ASCD SYSTEM

Refer to Owner's Manual for ASCD operating instructions.
Automatic Speed Control Device (ASCD) allows a driver to keep vehicle at predetermined constant speed without depressing accelerator pedal. Driver can set vehicle speed in advance between approximately 40 km/h (25 MPH) and 144 km/h (89 MPH).
ECM controls throttle angle of electric throttle control actuator to regulate engine speed.
Operation status of ASCD is indicated by CRUISE indicator and SET indicator in combination meter. If any malfunction occurs in ASCD system, it automatically deactivates control.
NOTE:
Always drive vehicle in safe manner according to traffic conditions and obey all traffic laws.

SET OPERATION

Press MAIN switch. (The CRUISE indicator in combination meter illuminates.)
When vehicle speed reaches a desired speed between approximately 40 km/h (25 MPH) and 144 km/h (89 MPH), press SET/COAST switch. (Then SET indicator in combination meter illuminates.)

ACCELERATE OPERATION

If the RESUME/ACCELERATE switch is depressed during cruise control driving, increase the vehicle speed until the switch is released or vehicle speed reaches maximum speed controlled by the system.
And then ASCD will keep the new set speed.

CANCEL OPERATION

When any of following conditions exist, cruise operation will be canceled.
- CANCEL switch is pressed
- More than two switches at ASCD steering switch are pressed at the same time (Set speed will be cleared)
- Brake pedal is depressed
- Clutch pedal is depressed or gear position is changed to the neutral position (M/T models)
- Selector lever is changed to N, P, R position (CVT models)
- Vehicle speed decreased to 13 km/h (8 MPH) lower than the set speed

When the ECM detects any of the following conditions, the ECM will cancel the cruise operation and inform the driver by blinking indicator lamp.
- Engine coolant temperature is slightly higher than the normal operating temperature, CRUISE lamp may blink slowly.
  When the engine coolant temperature decreases to the normal operating temperature, CRUISE lamp will stop blinking and the cruise operation will be able to work by pressing SET/COAST switch or RESUME/ACCELERATE switch.
- Malfunction for some self-diagnoses regarding ASCD control: SET lamp will blink quickly.

If MAIN switch is turned to OFF during ASCD is activated, all of ASCD operations will be canceled and vehicle speed memory will be erased.

COAST OPERATION

When the SET/COAST switch is depressed during cruise control driving, decrease vehicle set speed until the switch is released. And then ASCD will keep the new set speed.

RESUME OPERATION

When the RESUME/ACCELERATE switch is depressed after cancel operation other than depressing MAIN switch is performed, vehicle speed will return to last set speed. To resume vehicle set speed, vehicle condition must meet following conditions.

- Brake pedal is released.
- Clutch pedal is released (M/T models)
- Selector lever is in other than P and N positions (CVT models)
- Vehicle speed is greater than 40 km/h (25 MPH) and less than 144 km/h (89 MPH)

Component Description

INFOID:0000000005284544

ASCD STEERING SWITCH

Refer to EC-454.

ASCD BRAKE SWITCH

Refer to EC-460 and EC-538.

ASCD CLUTCH SWITCH

Refer to EC-460 and EC-538.

STOP LAMP SWITCH

Refer to EC-460, EC-473and EC-538.

ELECTRIC THROTTLE CONTROL ACTUATOR

Refer to EC-491, EC-495, EC-501and EC-505.

ASCD INDICATOR

Refer to EC-546.

CAN COMMUNICATION

System Description

INFOID:0000000005284545

CAN (Controller Area Network) is a serial communication line for real time application. It is an on-vehicle multiplex communication line with high data communication speed and excellent error detection ability. Many electronic control units are equipped onto a vehicle, and each control unit shares information and links with other control units during operation (not independent). In CAN communication, control units are connected with 2 communication lines (CAN H line, CAN L line) allowing a high rate of information transmission with less wiring. Each control unit transmits/receives data but selectively reads required data only.

EVAPORATIVE EMISSION SYSTEM

Description

INFOID:0000000005284546

SYSTEM DESCRIPTION

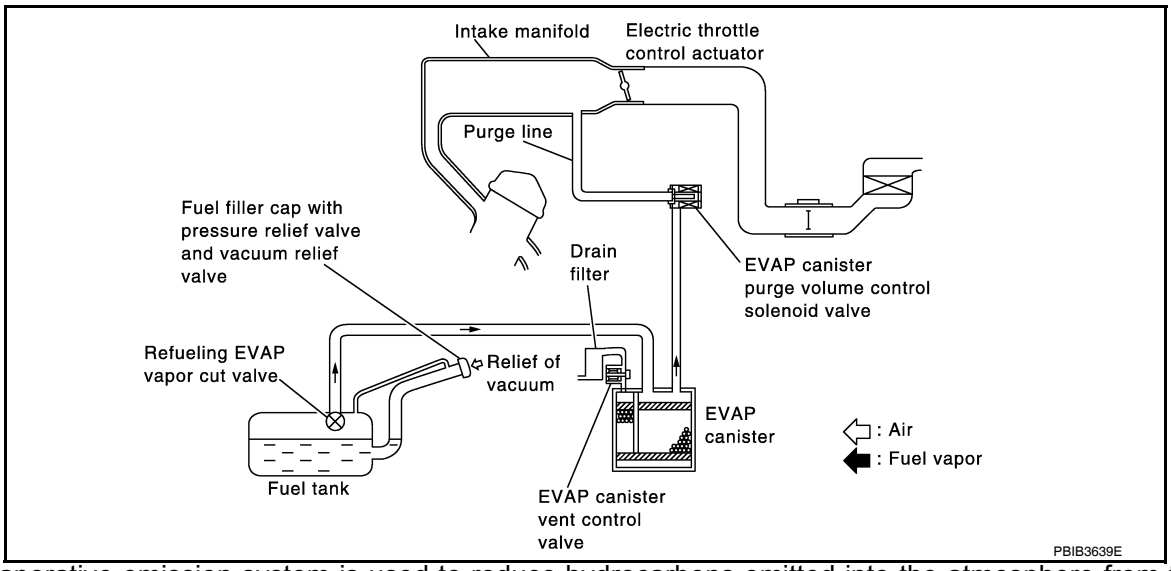

The evaporative emission system is used to reduce hydrocarbons emitted into the atmosphere from the fuel system. This reduction of hydrocarbons is accomplished by activated charcoals in the EVAP canister.
The fuel vapor in the sealed fuel tank is led into the EVAP canister which contains activated carbon and the vapor is stored there when the engine is not operating or when refueling to the fuel tank.
The vapor in the EVAP canister is purged by the air through the purge line to the intake manifold when the engine is operating. EVAP canister purge volume control solenoid valve is controlled by ECM. When the engine operates, the flow rate of vapor controlled by EVAP canister purge volume control solenoid valve is proportionally regulated as the air flow increases.
EVAP canister purge volume control solenoid valve also shuts off the vapor purge line during decelerating and idling.

EVAPORATIVE EMISSION LINE DRAWING

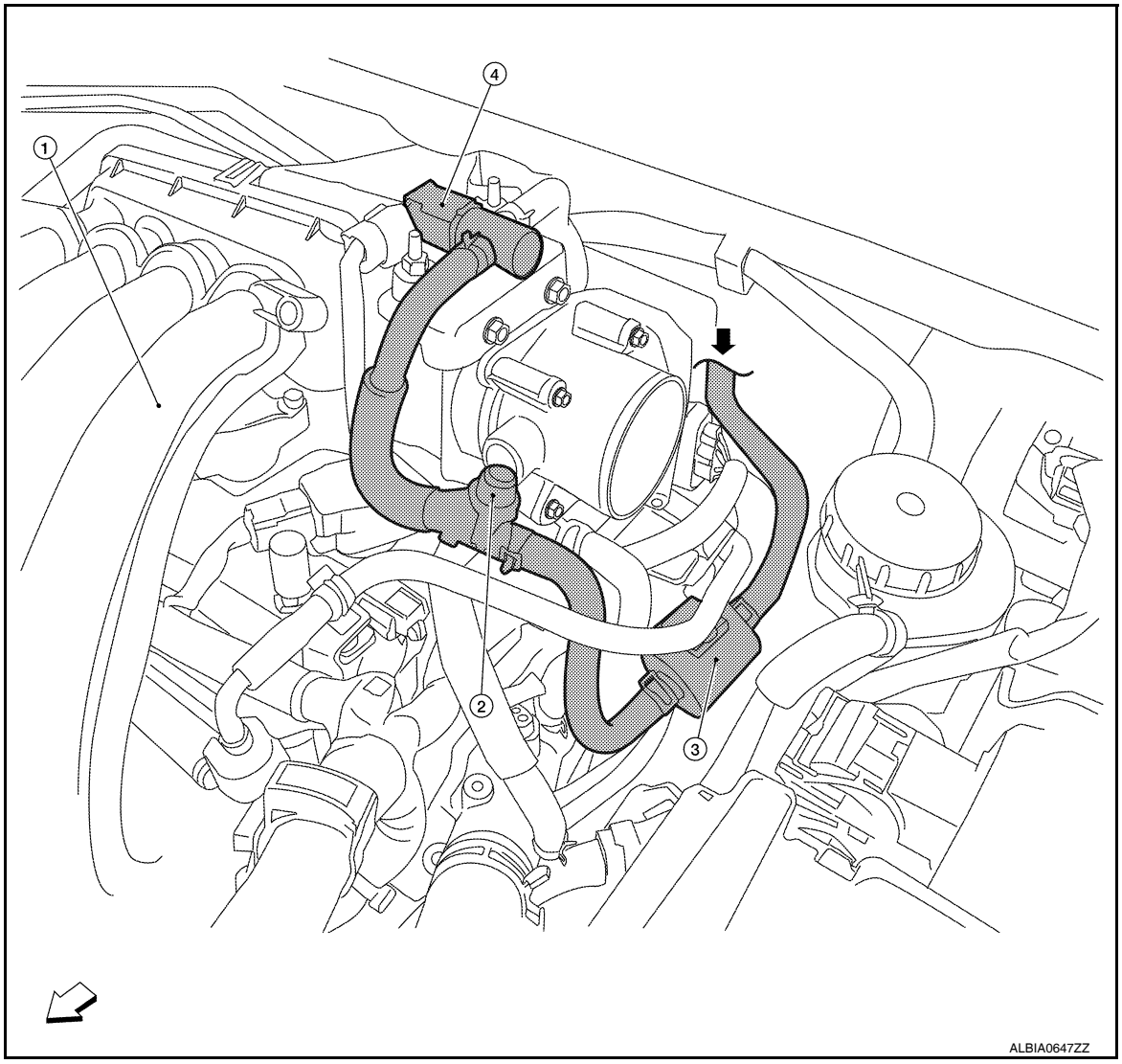

⇦ : Vehicle front
⬅ : From next figure

1. Intake manifold
2. EVAP service port
3. EVAP purge resonator
4. EVAP canister purge volume control solenoid valve

NOTE: Do not use soapy water or any type of solvent while installing vacuum hose or purge hoses.

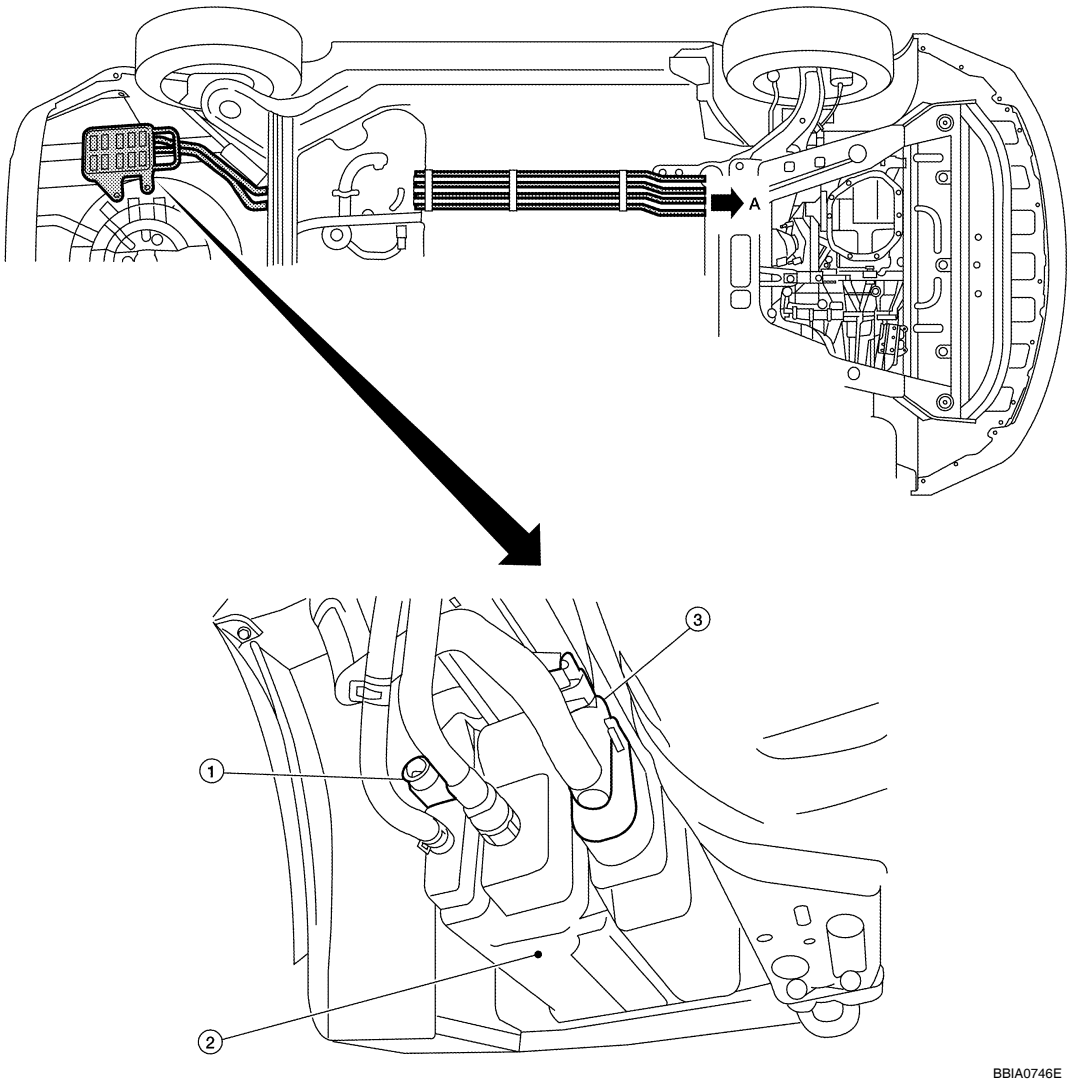

⬅ : To previous figure

1. EVAP control system pressure sensor 2. EVAP canister 3. EVAP canister vent control valve

NOTE: Do not use soapy water or any type of solvent while installing vacuum hose or purge hoses.

Component Inspection

INFOID:0000000005284547

EVAP CANISTER

Check EVAP canister as follows:

1. Block port **(B)**.
2. Blow air into port **(A)** and confirm that it flows freely out of port (**C**).
3. Release blocked port **(B)**.
4. Apply vacuum pressure to port **(B)** and confirm that vacuum pressure exists at the ports **(A)** and (**C**).
5. Block port **(A)** and **(B)**.
6. Apply pressure to port **(C)** and check that there is no leakage.

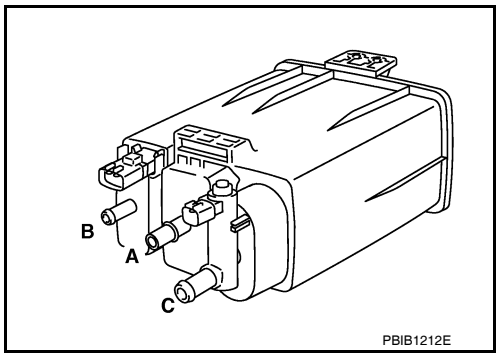

FUEL TANK VACUUM RELIEF VALVE (BUILT INTO FUEL FILLER CAP)

1. Wipe clean valve housing.

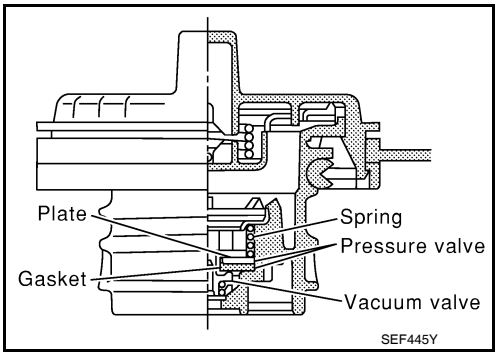

2. Check valve opening pressure and vacuum.

Pressure: 15.3 - 20.0 kPa
(0.156 - 0.204 kg/cm^2, 2.22 - 2.90 psi)
Vacuum: –6.0 to –3.4 kPa
(–0.061 to –0.035 kg/cm^2, –0.87 to –0.48 psi)

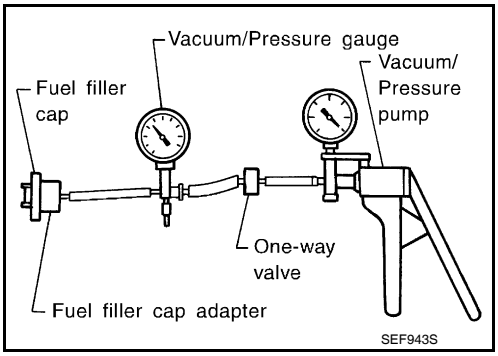

3. If out of specification, replace fuel filler cap as an assembly.

CAUTION:
Use only a genuine fuel filler cap as a replacement. If an incorrect fuel filler cap is used, the MIL may come on.

EVAP CANISTER PURGE VOLUME CONTROL SOLENOID VALVE

Refer to EC-360, "Component Inspection".

FUEL TANK TEMPERATURE SENSOR

Refer to EC-294, "Component Inspection".

EVAP CANISTER VENT CONTROL VALVE

Refer to EC-365, "Component Inspection".

EVAP CONTROL SYSTEM PRESSURE SENSOR

Refer to EC-382, "Component Inspection".

EVAP SERVICE PORT

Positive pressure is delivered to the EVAP system through the EVAP service port. If fuel vapor leakage in the EVAP system occurs, use a leak detector to locate the leak.

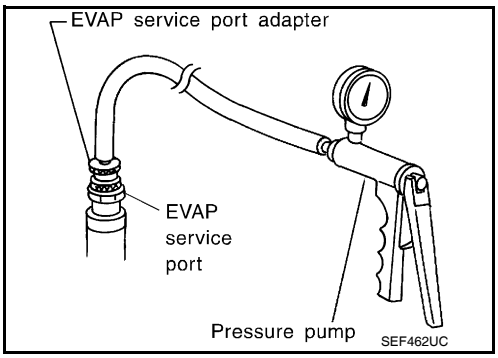

Removal and Installation

INFOID:0000000005284548

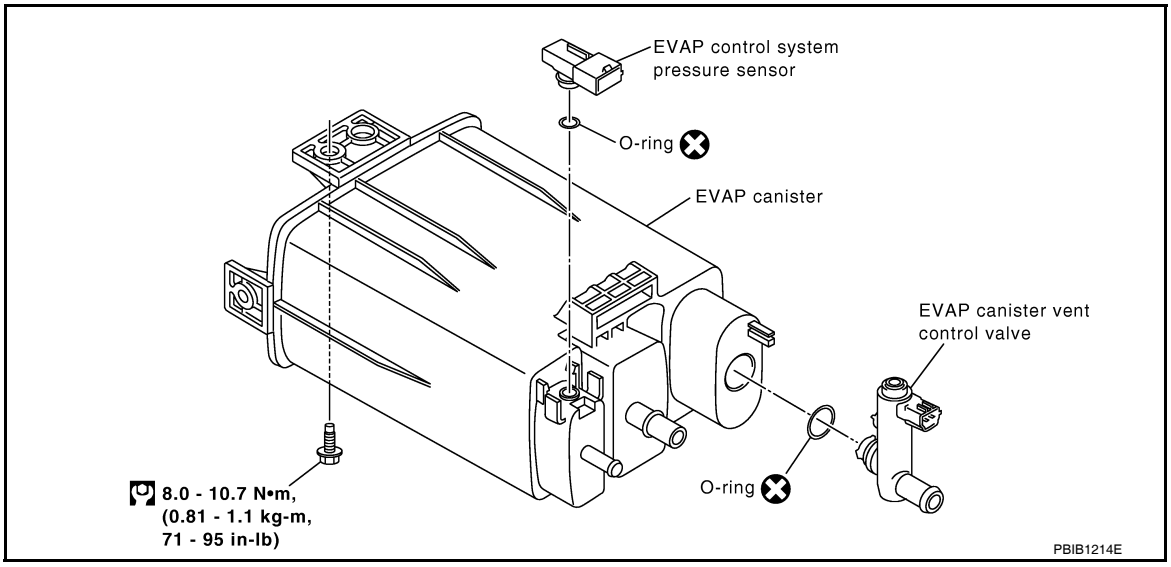

EVAP CANISTER

Removal

1. Remove EVAP canister protector.
2. Disconnect the EVAP control pressure sensor connector.
3. Remove the EVAP control pressure sensor and O-ring, if necessary.
4. Disconnect EVAP canister purge hose.
5. Remove the EVAP canister retaining bolt.
6. Disconnect fuel tank EVAP breather hose.
7. Disconnect EVAP vent control valve connector.
8. Disconnect the EVAP vent control valve hose.
9. Remove the EVAP canister.
10. Remove the EVAP vent control valve and O-ring, if necessary.

Installation

Installation is in the reverse order of removal.

CAUTION:

Always replace O-rings with a new one.

EVAP CANISTER CONTROL PRESSURE SENSOR

Removal

1. Remove EVAP canister protector.
2. Disconnect the EVAP control pressure sensor connector.
3. Remove the EVAP canister control pressure sensor and O-ring.

Installation

Installation is in the reverse order of removal.

CAUTION:

Always replace O-ring with a new one.

EVAP CANISTER VENT CONTROL VALVE

1. Remove EVAP canister protector.
2. Disconnect EVAP vent control valve connector.
3. Disconnect the EVAP vent control valve hose.

4. Turn EVAP canister vent control valve counterclockwise.
5. Remove the EVAP canister vent control valve.

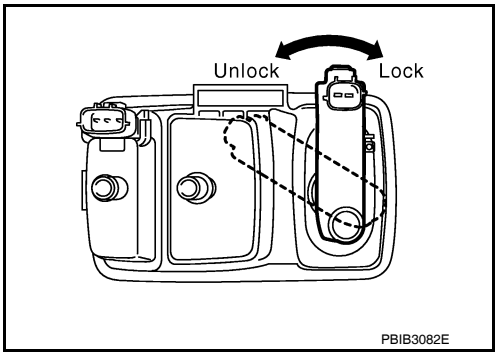

Installation
Installation is in the reverse order of removal.
CAUTION:
Always replace O-ring with a new one.

How to Detect Fuel Vapor Leakage

INFOID:0000000005284549

CAUTION:
- **Never use compressed air or a high pressure pump.**
- **Do not exceed 4.12 kPa (0.042 kg/cm^2, 0.6 psi) of pressure in EVAP system.**

NOTE:
- Do not start engine.
- Improper installation of EVAP service port adapter to the EVAP service port may cause a leak.

WITH CONSULT-III

1. Attach the EVAP service port adapter securely to the EVAP service port.
2. Also attach the pressure pump and hose to the EVAP service port adapter.
3. Turn ignition switch ON.
4. Select the “EVAP SYSTEM CLOSE” of “WORK SUPPORT MODE” with CONSULT-III.
5. Touch “START”. A bar graph (Pressure indicating display) will appear on the screen.
6. Apply positive pressure to the EVAP system until the pressure indicator reaches the middle of the bar graph.
7. Remove EVAP service port adapter and hose with pressure pump.
8. Locate the leak using a leak detector. Refer to EC-45, "Description".

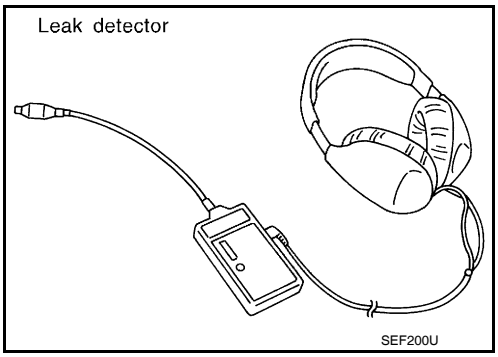

WITHOUT CONSULT-III

1. Attach the EVAP service port adapter securely to the EVAP service port.
2. Also attach the pressure pump with pressure gauge to the EVAP service port adapter.

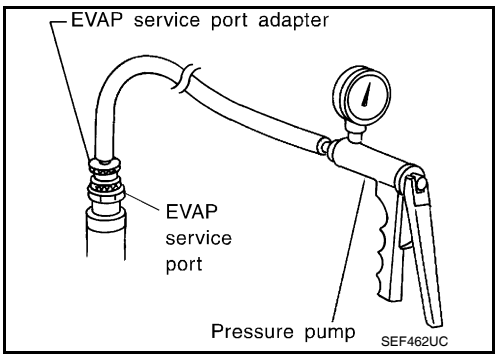

3. Apply battery voltage to the terminal of EVAP canister vent control valve (3) to make a closed EVAP system.
   - This illustration is a view from under vehicle
   - EVAP control system pressure sensor (1)
   - EVAP canister (2)

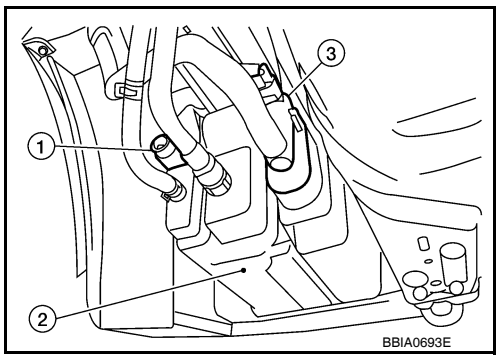

4. To locate the leak, deliver positive pressure to the EVAP system until pressure gauge points reach 1.38 to 2.76 kPa (0.014 to 0.028 kg/cm^2, 0.2 to 0.4 psi).
5. Remove EVAP service port adapter and hose with pressure pump.
6. Locate the leak using a leak detector. Refer to EC-45, "Description".

ON BOARD REFUELING VAPOR RECOVERY (ORVR)

System Description

INFOID:0000000005284550

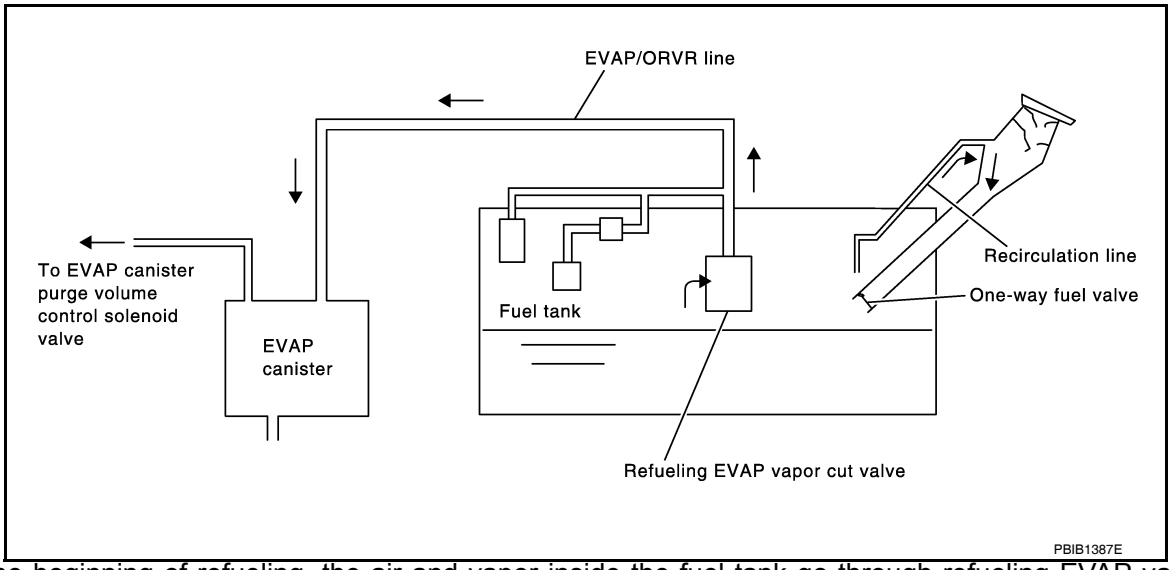

From the beginning of refueling, the air and vapor inside the fuel tank go through refueling EVAP vapor cut valve and EVAP/ORVR line to the EVAP canister. The vapor is absorbed by the EVAP canister and the air is released to the atmosphere.

When the refueling has reached the full level of the fuel tank, the refueling EVAP vapor cut valve is closed and refueling is stopped because of auto shut-off. The vapor which was absorbed by the EVAP canister is purged during driving.

WARNING:

When conducting inspections below, be sure to observe the following:

- **Put a "CAUTION: FLAMMABLE" sign in workshop.**
- **Do not smoke while servicing fuel system. Keep open flames and sparks away from work area.**
- **Be sure to furnish the workshop with a CO_2 fire extinguisher.**

CAUTION:

- **Before removing fuel line parts, carry out the following procedures:**
  - **Put drained fuel in an explosion-proof container and put lid on securely.**
  - **Release fuel pressure from fuel line. Refer to EC-101, "Fuel Pressure Check".**
  - **Disconnect negative battery cable.**
- **Always replace O-ring when the fuel gauge retainer is removed.**
- **Do not kink or twist hose and tube when they are installed.**
- **Do not tighten hose and clamps excessively to avoid damaging hoses.**
- **After installation, run engine and check for fuel leaks at connection.**
- **Do not attempt to top off the fuel tank after the fuel pump nozzle shuts off automatically. Continued refueling may cause fuel overflow, resulting in fuel spray and possibly a fire.**

Diagnosis Procedure

INFOID:0000000005284551

SYMPTOM: FUEL ODOR FROM EVAP CANISTER IS STRONG.

1. CHECK EVAP CANISTER

1. Remove EVAP canister with EVAP canister vent control valve and EVAP control system pressure sensor attached.
2. Weigh the EVAP canister with EVAP canister vent control valve and EVAP control system pressure sensor attached.
   The weight should be less than 1.9 kg (4.2 lb).

OK or NG

OK >> GO TO 2.
NG >> GO TO 3.

2. CHECK IF EVAP CANISTER SATURATED WITH WATER

Does water drain from the EVAP canister?

Yes or No

Yes >> GO TO 3.
No >> GO TO 6.

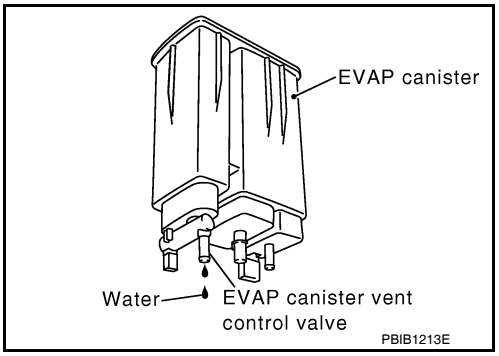

3. REPLACE EVAP CANISTER

Replace EVAP canister with a new one.

>> GO TO 4.

4. CHECK DRAIN FILTER

Refer to EC-55, "Component Inspection".

OK or NG

OK >> GO TO 5.
NG >> Replace drain filter.

5. DETECT MALFUNCTIONING PART

Check the EVAP hose between EVAP canister and vehicle frame for clogging or poor connection.

>> Repair or replace EVAP hose.

6. CHECK REFUELING EVAP VAPOR CUT VALVE

Refer to EC-55, "Component Inspection".

OK or NG

OK >> **INSPECTION END**
NG >> Replace refueling EVAP vapor cut valve with fuel tank.

SYMPTOM: CANNOT REFUEL/FUEL ODOR FROM THE FUEL FILLER OPENING IS STRONG WHILE REFUELING.

1. CHECK EVAP CANISTER

1. Remove EVAP canister with EVAP canister vent control valve and EVAP control system pressure sensor attached.
2. Weigh the EVAP canister with EVAP canister vent control valve and EVAP control system pressure sensor attached.
   The weight should be less than 1.9 kg (4.2 lb).

OK or NG

OK >> GO TO 2.
NG >> GO TO 3.

2. CHECK IF EVAP CANISTER SATURATED WITH WATER

Does water drain from the EVAP canister?

Yes or No

Yes >> GO TO 3.
No >> GO TO 5.

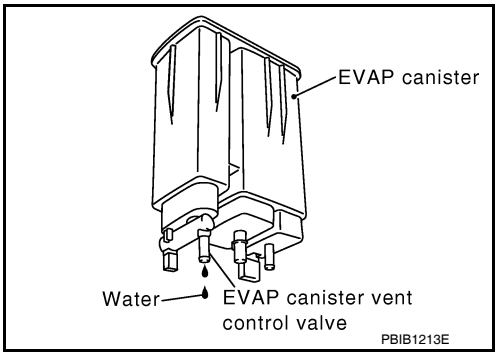

3. REPLACE EVAP CANISTER

Replace EVAP canister with a new one.

>> GO TO 4.

4. CHECK DRAIN FILTER

Refer to EC-55, "Component Inspection".

OK or NG

OK >> GO TO 5.
NG >> Replace drain filter.

5. DETECT MALFUNCTIONING PART

Check the EVAP hose between EVAP canister and vehicle frame for clogging or poor connection.

>> Repair or replace EVAP hose.

6. CHECK VENT HOSES AND VENT TUBES

Check hoses and tubes between EVAP canister and refueling EVAP vapor cut valve for clogging, kink, looseness and improper connection.

OK or NG

OK >> GO TO 7.
NG >> Repair or replace hoses and tubes.

7. CHECK FILLER NECK TUBE

Check recirculation line for clogging, dents and cracks.

OK or NG

OK >> GO TO 8.
NG >> Replace filler neck tube.

8. CHECK REFUELING EVAP VAPOR CUT VALVE

Refer to EC-55, "Component Inspection".

OK or NG

OK >> GO TO 9.
NG >> Replace refueling EVAP vapor cut valve with fuel tank.

9. CHECK FUEL FILLER TUBE

Check filler neck tube and hose connected to the fuel tank for clogging, dents and cracks.

OK or NG

OK >> GO TO 10.
NG >> Replace fuel filler tube.

10. CHECK ONE-WAY FUEL VALVE-I

Check one-way valve for clogging.

OK or NG

OK >> GO TO 11.

NG >> Repair or replace one-way fuel valve with fuel tank.

11. CHECK ONE-WAY FUEL VALVE-II

1. Make sure that fuel is drained from the tank.
2. Remove fuel filler tube and hose.
3. Check one-way fuel valve for operation as follows.
   When a stick is inserted, the valve should open, when removing stick it should close.
   Do not drop any material into the tank.

OK or NG

OK >> **INSPECTION END**
NG >> Replace fuel filler tube or replace one-way fuel valve with fuel tank.

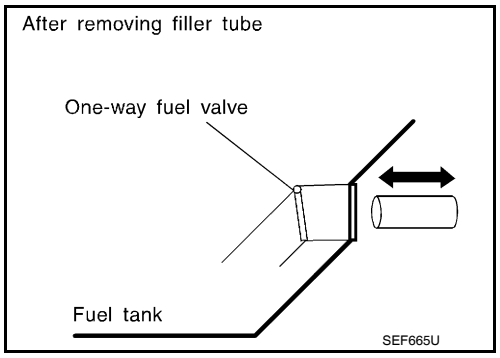

Component Inspection

INFOID:0000000005284552

REFUELING EVAP VAPOR CUT VALVE

WITH CONSULT-III

1. Remove fuel tank. Refer to FL-10.
2. Drain fuel from the tank as follows:
a. Remove fuel feed hose located on the fuel gauge retainer.
b. Connect a spare fuel hose, one side to fuel gauge retainer where the hose was removed and the other side to a fuel container.
c. Drain fuel using “FUEL PUMP RELAY” in “ACTIVE TEST” mode with CONSULT-III.
3. Check refueling EVAP vapor cut valve for being stuck to close as follows.
   Blow air into the refueling EVAP vapor cut valve (from the end of EVAP/ORVR line hose), and check that the air flows freely into the tank.
4. Check refueling EVAP vapor cut valve for being stuck to open as follows.
a. Connect vacuum pump to hose end.
b. Remove fuel gauge retainer with fuel gauge unit.
   Always replace O-ring with new one.
c. Put fuel tank upside down.
d. Apply vacuum pressure to hose end [–13.3 kPa (–100 mmHg, –3.94 inHg)] with fuel gauge retainer remaining open and check that the pressure is applicable.

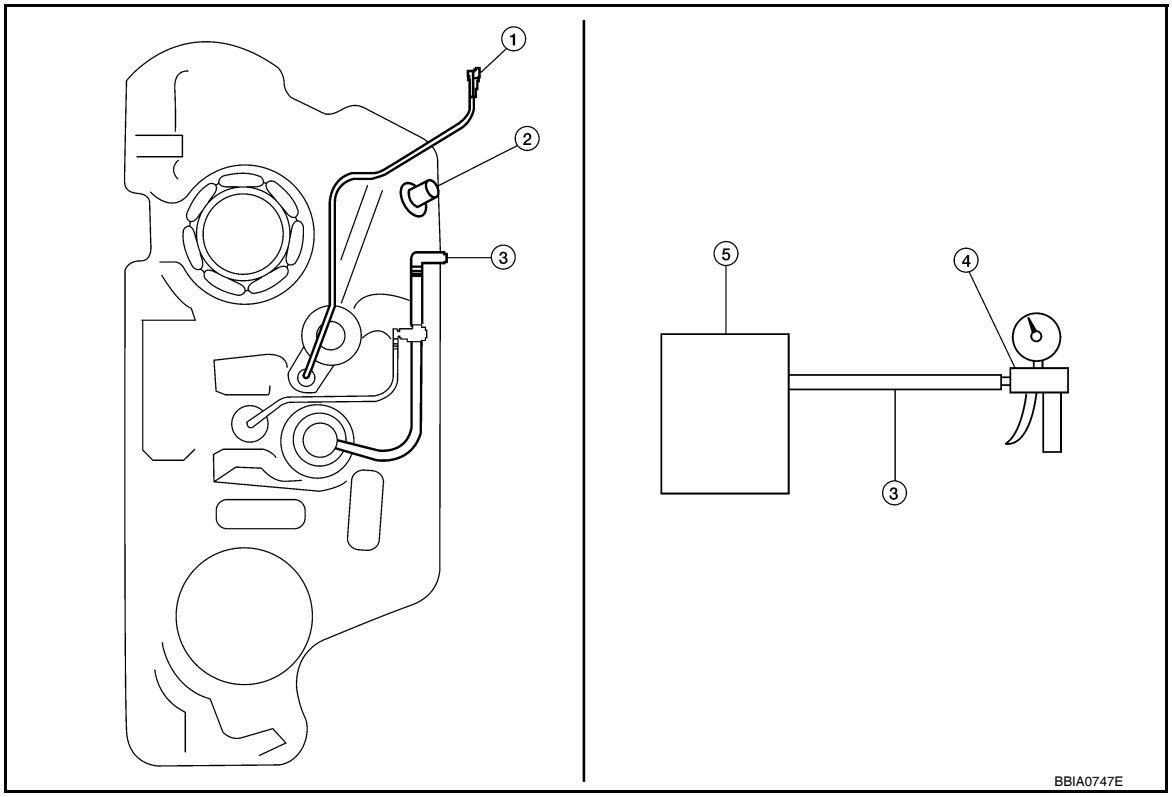

1. Recirculation line
2. Filler tube
3. EVAP/ORVR line
4. Vacuum/pressure handy pump
5. Fuel tank

WITHOUT CONSULT-III

1. Remove fuel tank. Refer to FL-10.
2. Drain fuel from the tank as follows:

a. Remove fuel gauge retainer.
b. Drain fuel from the tank using a handy pump into a fuel container.

3. Check refueling EVAP vapor cut valve for being stuck to close as follows.
   Blow air into the refueling EVAP vapor cut valve (from the end of EVAP/ORVR line hose), and check that the air flows freely into the tank.
4. Check refueling EVAP vapor cut valve for being stuck to open as follows.

a. Connect vacuum pump to hose end.
b. Remove fuel gauge retainer with fuel gauge unit.
   Always replace O-ring with new one.
c. Put fuel tank upside down.
d. Apply vacuum pressure to hose end [–13.3 kPa (–100 mmHg, –3.94 inHg)] with fuel gauge retainer remaining open and check that the pressure is applicable.

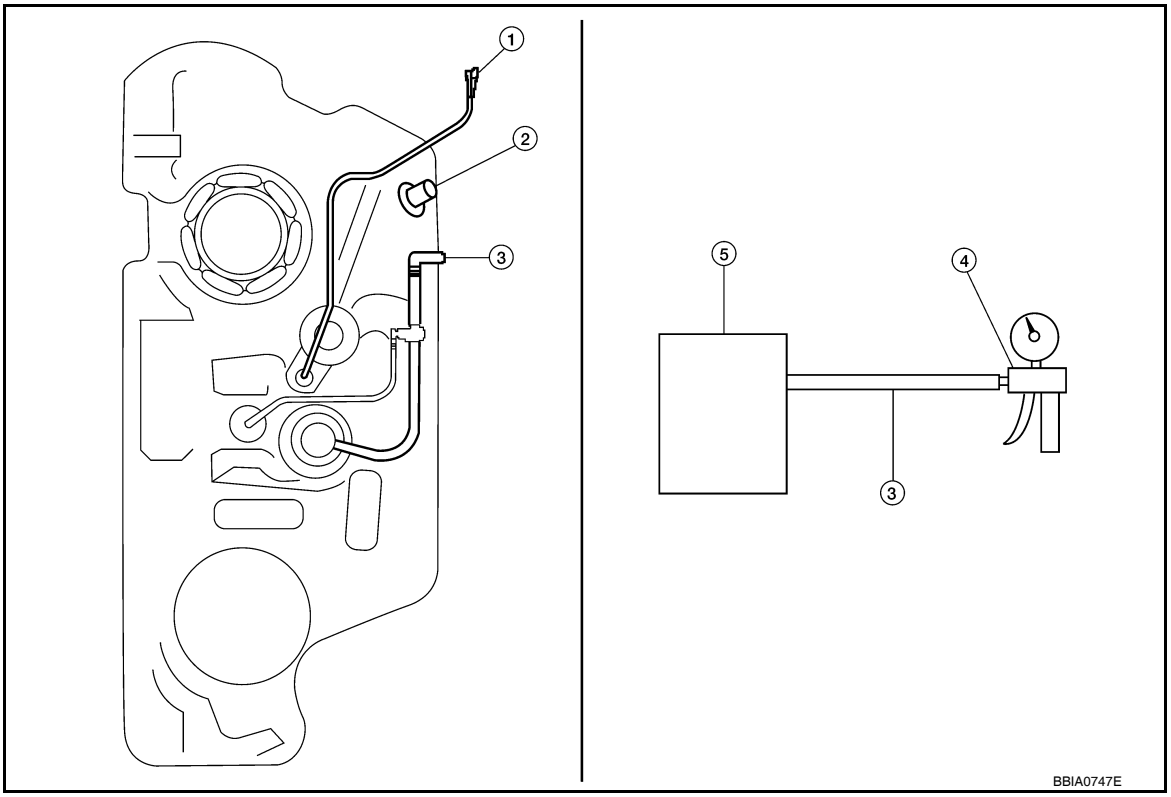

1. Recirculation line
2. Filler tube
3. EVAP/ORVR line
4. Vacuum/pressure handy pump
5. Fuel tank

DRAIN FILTER

1. Check visually for insect nests in the drain filter air inlet.
2. Check visually for cracks or flaws in the appearance.
3. Check visually for cracks or flaws in the hose.
4. Blow air into port A and check that it flows freely out of port B.
5. Block port B.
6. Blow air into port A and check that there is no leakage.
7. If NG, replace drain filter.

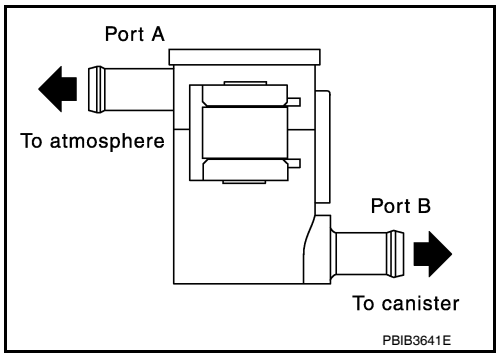

POSITIVE CRANKCASE VENTILATION

Description

INFOID:0000000005284553

SYSTEM DESCRIPTION

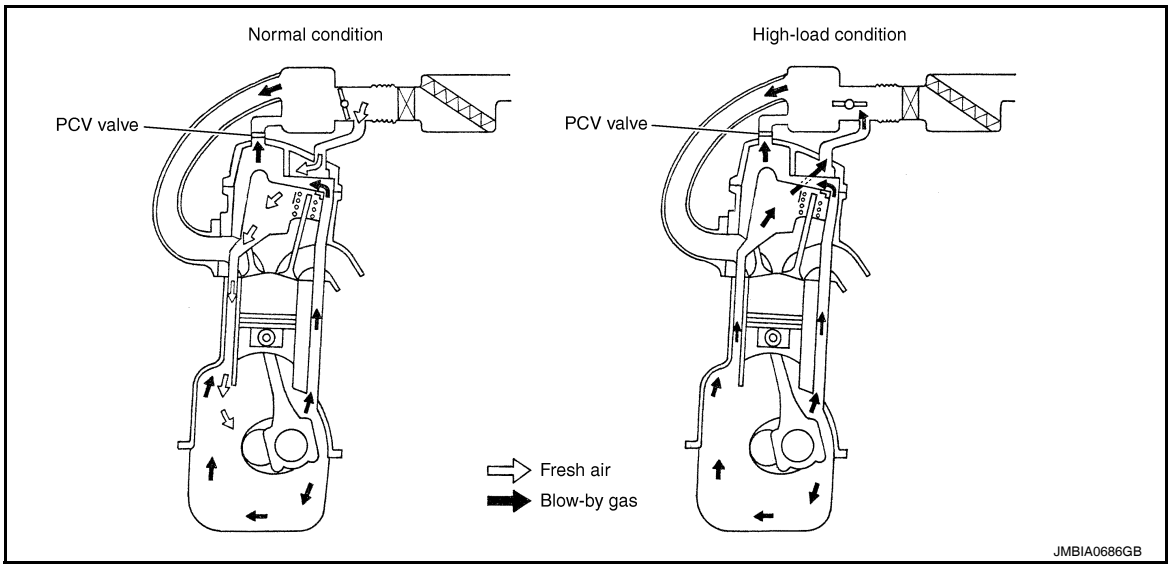

This system returns blow-by gas to the intake manifold.
The positive crankcase ventilation (PCV) valve is provided to conduct crankcase blow-by gas to the intake manifold. During partial throttle operation of the engine, the intake manifold sucks the blow-by gas through the PCV valve. Normally, the capacity of the valve is sufficient to handle any blow-by and a small amount of ventilating air. The ventilating air is then drawn from the air inlet tubes into the crankcase. In this process the air passes through the hose connecting air inlet tubes to rocker cover.
Under full-throttle condition, the manifold vacuum is insufficient to draw the blow-by flow through the valve. The flow goes through the hose connection in the reverse direction.
On vehicles with an excessively high blow-by, the valve does not meet the requirement. This is because some of the flow will go through the hose connection to the air inlet tubes under all conditions.

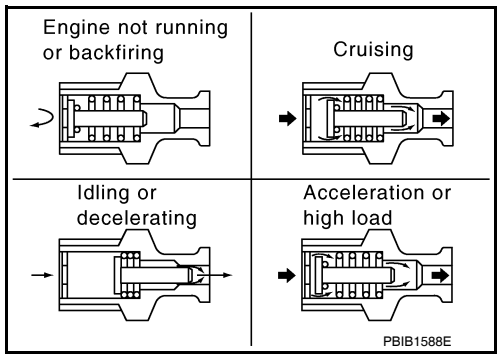

Component Inspection

INFOID:0000000005284554

PCV (POSITIVE CRANKCASE VENTILATION) VALVE

With engine running at idle, remove PCV valve from rocker cover. A properly working valve makes a hissing noise as air passes through it. A strong vacuum should be felt immediately when a finger is placed over valve inlet.

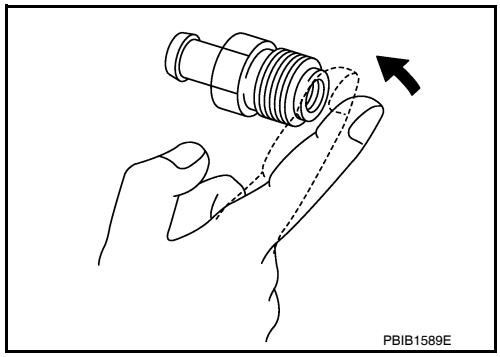

PCV VALVE VENTILATION HOSE

1. Check hoses and hose connections for leaks.
2. Disconnect all hoses and clean with compressed air. If any hose cannot be freed of obstructions, replace.

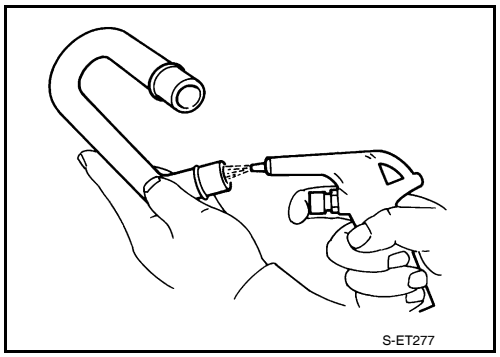

NVIS (NISSAN VEHICLE IMMOBILIZER SYSTEM-NATS)

Description

INFOID:0000000005284555

- **If the security indicator illuminates with the ignition switch ON or DTC P1610 - P1615 is displayed in "SELF DIAGNOSTIC RESULT" mode, perform the trouble diagnosis for corresponding to the detected DTC. Refer to EC-28, "P1610-P1615".**
- **Check that no DTC is displayed in "SELF DIAGNOSIS RESULT" mode of "BCM" before erasing the detected DTC in "ENGINE" mode with CONSULT-III.**
- **When replacing ECM, refer to EC-98, "Procedure After Replacing ECM".**

ON BOARD DIAGNOSTIC (OBD) SYSTEM

Introduction

INFOID:0000000005284556

The ECM has an on board diagnostic system, which detects malfunctions related to engine sensors or actuators. The ECM also records various emission-related diagnostic information including:

Emission-related diagnostic information	Diagnostic service
Diagnostic Trouble Code (DTC)	Service $03 of SAE J1979/ISO 15031-5
Freeze Frame data	Service $02 of SAE J1979/ISO 15031-5
System Readiness Test (SRT) code	Service $01 of SAE J1979/ISO 15031-5
1st trip Diagnostic Trouble Code (1st Trip DTC)	Service $07 of SAE J1979/ISO 15031-5
1st trip Freeze Frame data	—
Test values and Test limits	Service $06 of SAE J1979/ISO 15031-5
Calibration ID	Service $09 of SAE J1979/ISO 15031-5
Permanent Diagnostic Trouble Code (Permanent DTC)	Service $0A* of SAE J1979/ISO 15031-5

*: Service $0A is not applied for regions where it is not mandated.

The above information can be checked using procedures listed in the table below.

×: Applicable —: Not applicable

	DTC	1st trip DTC	Freeze Frame data	1st trip Freeze Frame data	SRT code	SRT status	Test value	Permanent DTC status
CONSULT-III	×	×	×	×	×	×	—	×
GST	×	×	×	—	×	×	×	×
ECM	×	×*	—	—	—	×	—	—

*: When DTC and 1st trip DTC simultaneously appear on the display, they cannot be clearly distinguished from each other.

The malfunction indicator lamp (MIL) on the instrument panel lights up when the same malfunction is detected in two consecutive trips (Two trip detection logic), or when the ECM enters fail-safe mode.
(Refer to EC-109, "Fail-Safe Chart".)

Two Trip Detection Logic

INFOID:0000000005284557

When a malfunction is detected for the first time, 1st trip DTC and 1st trip Freeze Frame data are stored in the ECM memory. The MIL will not light up at this stage. <1st trip>
If the same malfunction is detected again during the next drive, the DTC and Freeze Frame data are stored in the ECM memory, and the MIL lights up. The MIL lights up at the same time when the DTC is stored. <2nd trip> The “trip” in the “Two Trip Detection Logic” means a driving mode in which self-diagnosis is performed during vehicle operation. Specific on board diagnostic items will cause the ECM to light up or blink the MIL, and store DTC and Freeze Frame data, even in the 1st trip, as shown below.

×: Applicable —: Not applicable

Items	MIL				DTC		1st trip DTC	
	1st trip		2nd trip		1st trip displaying	2nd trip displaying	1st trip displaying	2nd trip display-ing
	Blinking	Lighting up	Blinking	Lighting up				
Misfire (Possible three way catalyst damage) — DTC: P0300 - P0304 is being detected	×	—	—	—	—	—	×	—
Misfire (Possible three way catalyst damage) — DTC: P0300 - P0304 is being detected	—	—	×	—	—	×	—	—
One trip detection diagnoses (Refer to EC-62, "Emission-related Diagnostic Information".)	—	×	—	—	×	—	—	—
Except above	—	—	—	×	—	×	×	—

When there is an open circuit on MIL circuit, the ECM cannot warn the driver by MIL lighting up when there is malfunction on engine control system.
Therefore, when electrical controlled throttle and part of ECM related diagnoses are continuously detected as NG for 5 trips, ECM warns the driver that engine control system malfunctions and MIL circuit is open by means of operating fail-safe function.
The fail-safe function also operates when above diagnoses except MIL circuit are detected, and demands the driver to repair the malfunction.

Engine operating condition in fail-safe mode	Engine speed will not rise more than 2,500 rpm due to the fuel cut

Emission-related Diagnostic Information

INFOID:0000000005284558

EMISSION-RELATED DIAGNOSTIC INFORMATION ITEMS

×: Applicable —: Not applicable

Items (CONSULT-III screen terms)	DTC*1		SRT code	Trip	MIL	Permanent DTC group*4	Reference
	CONSULT-III GST*2	ECM*3					
LOST COMM (TCM)	U0101	0101*5	—	1	×	B	EC-159
LOST COMM (BCM)	U0140	0140*5	—	1	×	B	EC-161
CAN COMM CIRCUIT	U1001	1001*5	—	2	—	—	EC-163
NO DTC IS DETECTED. FURTHER TESTING MAY BE REQUIRED.	**P0000**	**0000**	—	—	**Flashing***6	—	EC-84
INT/V TIM CONT-B1	P0011	0011	×	2	×	B	EC-165
A/F SEN1 HTR (B1)	P0031	0031	—	2	×	B	EC-169
A/F SEN1 HTR (B1)	P0032	0032	—	2	×	B	EC-169
HO2S2 HTR (B1)	P0037	0037	—	2	×	B	EC-174
HO2S2 HTR (B1)	P0038	0038	—	2	×	B	EC-174
INT/V TIM V/CIR-B1	P0075	0075	—	2	×	B	EC-180
MAF SEN/CIRCUIT-B1	P0101	0101	—	2	×	B	EC-185
MAF SEN/CIRCUIT-B1	P0102	0102	—	1	×	B	EC-193
MAF SEN/CIRCUIT-B1	P0103	0103	—	1	×	B	EC-193
IAT SEN/CIRCUIT-B1	P0112	0112	—	2	×	B	EC-200
IAT SEN/CIRCUIT-B1	P0113	0113	—	2	×	B	EC-200
ECT SEN/CIRC	P0116	0116	—	2	×	B	EC-204
ECT SEN/CIRC	P0117	0117	—	1	×	B	EC-207
ECT SEN/CIRC	P0118	0118	—	1	×	B	EC-207
TP SEN 2/CIRC-B1	P0122	0122	—	1	×	B	EC-212
TP SEN 2/CIRC-B1	P0123	0123	—	1	×	B	EC-212
ECT SENSOR	P0125	0125	—	2	×	B	EC-217
IAT SENSOR-B1	P0127	0127	—	2	×	B	EC-220
THERMSTAT FNCTN	P0128	0128	—	2	×	B	EC-223
A/F SENSOR1 (B1)	P0130	0130	—	2	×	A	EC-225
A/F SENSOR1 (B1)	P0131	0131	—	2	×	B	EC-231
A/F SENSOR1 (B1)	P0132	0132	—	2	×	B	EC-237
A/F SENSOR1 (B1)	P0133	0133	×	2	×	A	EC-243
HO2S2 (B1)	P0137	0137	×	2	×	A	EC-250
HO2S2 (B1)	P0138	0138	×	2	×	A	EC-257
HO2S2 (B1)	P0139	0139	×	2	×	A	EC-266

Items (CONSULT-III screen terms)	DTC*1		SRT code	Trip	MIL	Permanent DTC group*4	Reference
	CONSULT-III GST*2	ECM*3					
FUEL SYS-LEAN-B1	P0171	0171	—	2	×	B	EC-275
FUEL SYS-RICH-B1	P0172	0172	—	2	×	B	EC-281
FTT SENSOR	P0181	0181	—	2	×	B	EC-287
FTT SEN/CIRCUIT	P0182	0182	—	2	×	B	EC-291
FTT SEN/CIRCUIT	P0183	0183	—	2	×	B	EC-291
EOT SEN/CIRC	P0196	0196	—	2	×	B	EC-295
EOT SEN/CIRC	P0197	0197	—	2	×	B	EC-298
EOT SEN/CIRC	P0198	0198	—	2	×	B	EC-298
TP SEN 1/CIRC-B1	P0222	0222	—	1	×	B	EC-302
TP SEN 1/CIRC-B1	P0223	0223	—	1	×	B	EC-302
MULTI CYL MISFIRE	P0300	0300	—	1 or 2	×	B	EC-307
CYL 1 MISFIRE	P0301	0301	—	1 or 2	×	B	EC-307
CYL 2 MISFIRE	P0302	0302	—	1 or 2	×	B	EC-307
CYL 3 MISFIRE	P0303	0303	—	1 or 2	×	B	EC-307
CYL 4 MISFIRE	P0304	0304	—	1 or 2	×	B	EC-307
KNOCK SEN/CIRC-B1	P0327	0327	—	2	—	—	EC-313
KNOCK SEN/CIRC-B1	P0328	0328	—	2	—	—	EC-313
CKP SEN/CIRCUIT	P0335	0335	—	2	×	B	EC-317
CMP SEN/CIRC-B1	P0340	0340	—	2	×	B	EC-324
TW CATALYST SYS-B1	P0420	0420	×	2	×	A	EC-330
EVAP PURG FLOW/MON	P0441	0441	×	2	×	A	EC-335
EVAP SMALL LEAK	P0442	0442	×	2	×	A	EC-340
PURG VOLUME CONT/V	P0443	0443	—	2	×	A	EC-347
PURG VOLUME CONT/V	P0444	0444	—	2	×	B	EC-355
PURG VOLUME CONT/V	P0445	0445	—	2	×	B	EC-355
VENT CONTROL VALVE	P0447	0447	—	2	×	B	EC-361
VENT CONTROL VALVE	P0448	0448	—	2	×	B	EC-367
EVAP SYS PRES SEN	P0451	0451	—	2	×	A	EC-373
EVAP SYS PRES SEN	P0452	0452	—	2	×	B	EC-376
EVAP SYS PRES SEN	P0453	0453	—	2	×	B	EC-383
EVAP GROSS LEAK	P0455	0455	—	2	×	A	EC-391
EVAP VERY SML LEAK	P0456	0456	×*7	2	×	A	EC-398
FUEL LEV SEN SLOSH	P0460	0460	—	2	×	A	EC-406
FUEL LEVEL SENSOR	P0461	0461	—	2	×	B	EC-408
FUEL LEVL SEN/CIRC	P0462	0462	—	2	×	B	EC-410
FUEL LEVL SEN/CIRC	P0463	0463	—	2	×	B	EC-410
VEH SPEED SEN/CIRC*8	P0500	0500	—	2	×	B	EC-412
ISC SYSTEM	P0506	0506	—	2	×	B	EC-414
ISC SYSTEM	P0507	0507	—	2	×	B	EC-416
ECM BACK UP/CIRCUIT	P0603	0603	—	2	×	B	EC-418
ECM	P0605	0605	—	1 or 2	— or ×	B	EC-421

Items (CONSULT-III screen terms)	DTC*1		SRT code	Trip	MIL	Permanent DTC group*4	Reference
	CONSULT-III GST*2	ECM*3					
ECM	P0607	0607	—	1 (CVT) 2 (M/T)	× (CVT) — (M/T)	B	EC-423
SENSOR POWER/CIRC	P0643	0643	—	1	×	B	EC-424
T/M RANGE SENSOR A	P0705	0705	—	2	×	B	CVT-60
FLUID TEMP SENSOR A*9	P0710	0710	—	1	×	B	CVT-65
INPUT SPEED SENSOR A	P0715	0715	—	2	×	B	CVT-70
OUTPUT SPEED SENSOR*8	P0720	0720	—	2	×	B	CVT-75
TORQUE CONVERTER	P0740	0740	—	2	×	B	CVT-83
TORQUE CONVERTER	P0744	0744	—	2	×	B	CVT-88
PC SOLENOID A	P0745	0745	—	2	×	B	CVT-90
PC SOLENOID A	P0746	0746	—	1	×	B	CVT-95
PC SOLENOID B	P0776	0776	—	2	×	B	CVT-97
PC SOLENOID B	P0778	0778	—	2	×	B	CVT-99
FLUID PRESS SEN/SW A	P0840	0840	—	2	×	B	CVT-109
P-N POS SW/CIRCUIT	P0850	0850	—	2	×	B	EC-429
CLOSED LOOP-B1	P1148	1148	—	1	×	A	EC-434
TCS/CIRC	P1212	1212	—	2	—	—	EC-435
ENG OVER TEMP	P1217	1217	—	1	×	B	EC-436
CTP LEARNING-B1	P1225	1225	—	2	—	—	EC-448
CTP LEARNING-B1	P1226	1226	—	2	—	—	EC-450
COLD START CONTROL	P1421	1421	—	2	×	A	EC-452
ASCD SW	P1564	1564	—	1	—	—	EC-454
ASCD BRAKE SW	P1572	1572	—	1	—	—	EC-460
ASCD VHL SPD SEN	P1574	1574	—	1	—	—	EC-469
LOCK MODE	P1610	1610	—	2	—	—	BL-170
ID DISCORD,IMMU-ECM	P1611	1611	—	2	—	—	BL-170
CHAIN OF ECM-IMMU	P1612	1612	—	2	—	—	BL-170
CHAIN OF IMMU-KEY	P1614	1614	—	2	—	—	BL-170
DIFFERENCE OF KEY	P1615	1615	—	2	—	—	BL-170
IN PULY SPEED	P1715	1715	—	2	—	—	EC-471
SLCT SOLENOID	P1740	1740	—	2	×	B	CVT-128
STEP MOTOR	P1777	1777	—	1	×	B	CVT-134
STEP MOTOR	P1778	1778	—	2	×	B	CVT-138
BRAKE SW/CIRCUIT	P1805	1805	—	2	—	—	EC-473
TUMBLE CONT/V	P2004	2004	—	2	×	B	EC-478
TUMBLE POS SEN	P2014	2014	—	2	×	B	EC-485
ETC MOT PWR-B1	P2100	2100	—	1	×	B	EC-491
ETC FNCTN/CIRC-B1	P2101	2101	—	1	×	B	EC-495
ETC MOT PWR	P2103	2103	—	1	×	B	EC-491
ETC MOT-B1	P2118	2118	—	1	×	B	EC-501
ETC ACTR-B1	P2119	2119	—	1	×	B	EC-505
APP SEN 1/CIRC	P2122	2122	—	1	×	B	EC-507

Items (CONSULT-III screen terms)	DTC*1		SRT code	Trip	MIL	Permanent DTC group*4	Reference
	CONSULT-III GST*2	ECM*3					
APP SEN 1/CIRC	P2123	2123	—	1	×	B	EC-507
APP SEN 2/CIRC	P2127	2127	—	1	×	B	EC-512
APP SEN 2/CIRC	P2128	2128	—	1	×	B	EC-512
TP SENSOR-B1	P2135	2135	—	1	×	B	EC-519
APP SENSOR	P2138	2138	—	1	×	B	EC-524
A/F SENSOR1 (B1)	P2A00	2A00	—	2	×	A	EC-531

*1: 1st trip DTC No. is the same as DTC No.
*2: This number is prescribed by SAE J2012/ISO 15031-6.
*3: In Diagnostic Test Mode II (Self-diagnostic results), this number is controlled by NISSAN.
*4: Refer to EC-62, "Emission-related Diagnostic Information", "PERMANENT DIAGNOSTIC TROUBLE CODE (PERMANENT DTC)".
*5: The troubleshooting for this DTC needs CONSULT-III.
*6: When the ECM in the mode of displaying SRT status, MIL may flash. For the details, refer to "How to Display SRT Status".
*7: SRT code will not be set if the self-diagnostic result is NG.
*8: When the fail-safe operations for both self-diagnoses occur, the MIL illuminates.
*9: When erasing this DTC, always use CONSULT-III or GST.

DTC AND 1ST TRIP DTC

The 1st trip DTC (whose number is the same as the DTC number) is displayed for the latest self-diagnostic result obtained. If the ECM memory was cleared previously, and the 1st trip DTC did not reoccur, the 1st trip DTC will not be displayed.
If a malfunction is detected during the 1st trip, the 1st trip DTC is stored in the ECM memory. The MIL will not light up (two trip detection logic). If the same malfunction is not detected in the 2nd trip (meeting the required driving pattern), the 1st trip DTC is cleared from the ECM memory. If the same malfunction is detected in the 2nd trip, both the 1st trip DTC and DTC are stored in the ECM memory and the MIL lights up. In other words, the DTC is stored in the ECM memory and the MIL lights up when the same malfunction occurs in two consecutive trips. If a 1st trip DTC is stored and a non-diagnostic operation is performed between the 1st and 2nd trips, only the 1st trip DTC will continue to be stored. For malfunctions that blink or light up the MIL during the 1st trip, the DTC and 1st trip DTC are stored in the ECM memory.
Procedures for clearing the DTC and the 1st trip DTC from the ECM memory are described in "HOW TO ERASE EMISSION-RELATED DIAGNOSTIC INFORMATION".
For malfunctions in which 1st trip DTCs are displayed, refer to "EMISSION-RELATED DIAGNOSTIC INFORMATION ITEMS". These items are required by legal regulations to continuously monitor the system/component. In addition, the items monitored non-continuously are also displayed on CONSULT-III.
1st trip DTC is specified in Service $07 of SAE J1979/ISO 15031-5. 1st trip DTC detection occurs without lighting up the MIL and therefore does not warn the driver of a malfunction. However, 1st trip DTC detection will not prevent the vehicle from being tested, for example during Inspection/Maintenance (I/M) tests.
When a 1st trip DTC is detected, check, print out or write down and erase (1st trip) DTC and Freeze Frame data as specified in Work Flow procedure Step 2, refer to EC-104, "Trouble Diagnosis Introduction". Then perform DTC Confirmation Procedure or Overall Function Check to try to duplicate the malfunction. If the malfunction is duplicated, the item requires repair.

How to Read DTC and 1st Trip DTC

DTC and 1st trip DTC can be read by the following methods.

WITH CONSULT-III

WITH GST

CONSULT-III or GST (Generic Scan Tool) Examples: P0340, P0850, P1148, etc.
These DTCs are prescribed by SAE J2012/ISO 15031-6.
(CONSULT-III also displays the malfunctioning component or system.)

NO TOOLS

The number of blinks of the MIL in the Diagnostic Test Mode II (Self-Diagnostic Results) indicates the DTC.
Example: 0340, 0850, 1148, etc.
These DTCs are controlled by NISSAN.

- **1st trip DTC No. is the same as DTC No.**

- **Output of a DTC indicates a malfunction. However, GST or the Diagnostic Test Mode II do not indicate whether the malfunction is still occurring or has occurred in the past and has returned to normal. CONSULT-III can identify malfunction status as shown below. Therefore, using CONSULT-III (if available) is recommended.**

DTC or 1st trip DTC of a malfunction is displayed in SELF-DIAGNOSTIC RESULTS mode of CONSULT-III. Time data indicates how many times the vehicle was driven after the last detection of a DTC.
If the DTC is being detected currently, the time data will be [0].
If a 1st trip DTC is stored in the ECM, the time data will be [1t].

FREEZE FRAME DATA AND 1ST TRIP FREEZE FRAME DATA

The ECM records the driving conditions such as fuel system status, calculated load value, engine coolant temperature, short term fuel trim, long term fuel trim, engine speed, vehicle speed, absolute throttle position, base fuel schedule and intake air temperature at the moment a malfunction is detected.
Data which are stored in the ECM memory, along with the 1st trip DTC, are called 1st trip freeze frame data. The data, stored together with the DTC data, are called freeze frame data and displayed on CONSULT-III or GST. The 1st trip freeze frame data can only be displayed on the CONSULT-III screen, not on the GST. For details, see EC-131, "CONSULT-III Function (ENGINE)".
Only one set of freeze frame data (either 1st trip freeze frame data or freeze frame data) can be stored in the ECM. 1st trip freeze frame data is stored in the ECM memory along with the 1st trip DTC. There is no priority for 1st trip freeze frame data and it is updated each time a different 1st trip DTC is detected. However, once freeze frame data (2nd trip detection/MIL on) is stored in the ECM memory, 1st trip freeze frame data is no longer stored. Remember, only one set of freeze frame data can be stored in the ECM. The ECM has the following priorities to update the data.

Priority	Items	
1	Freeze frame data	Misfire — DTC: P0300 - P0304 Fuel Injection System Function — DTC: P0171, P0172
2		Except the above items (Includes CVT related items)
3	1st trip freeze frame data	

For example, the EGR malfunction (Priority: 2) was detected and the freeze frame data was stored in the 2nd trip. After that when the misfire (Priority: 1) is detected in another trip, the freeze frame data will be updated from the EGR malfunction to the misfire. The 1st trip freeze frame data is updated each time a different malfunction is detected. There is no priority for 1st trip freeze frame data. However, once freeze frame data is stored in the ECM memory, 1st trip freeze data is no longer stored (because only one freeze frame data or 1st trip freeze frame data can be stored in the ECM). If freeze frame data is stored in the ECM memory and freeze frame data with the same priority occurs later, the first (original) freeze frame data remains unchanged in the ECM memory.
Both 1st trip freeze frame data and freeze frame data (along with the DTCs) are cleared when the ECM memory is erased. Procedures for clearing the ECM memory are described in "EMISSION-RELATED DIAGNOSTIC INFORMATION ITEMS".

SYSTEM READINESS TEST (SRT) CODE

System Readiness Test (SRT) code is specified in Service $01 of SAE J1979/ISO 15031-5.
As part of an enhanced emissions test for Inspection & Maintenance (I/M), certain states require the status of SRT be used to indicate whether the ECM has completed self-diagnosis of major emission systems and components. Completion must be verified in order for the emissions inspection to proceed.
If a vehicle is rejected for a State emissions inspection due to one or more SRT items indicating “INCMP”, use the information in this Service Manual to set the SRT to “CMPLT”.
In most cases the ECM will automatically complete its self-diagnosis cycle during normal usage, and the SRT status will indicate “CMPLT” for each application system. Once set as “CMPLT”, the SRT status remains “CMPLT” until the self-diagnosis memory is erased.
Occasionally, certain portions of the self-diagnostic test may not be completed as a result of the customer's normal driving pattern; the SRT will indicate “INCMP” for these items.
NOTE:
The SRT will also indicate “INCMP” if the self-diagnosis memory is erased for any reason or if the ECM memory power supply is interrupted for several hours.
If, during the state emissions inspection, the SRT indicates “CMPLT” for all test items, the inspector will continue with the emissions test. However, if the SRT indicates “INCMP” for one or more of the SRT items the vehicle is returned to the customer untested.
NOTE:

If permanent DTC is stored or MIL illuminates during the state emissions inspection, the vehicle is also returned to the customer untested even though the SRT indicates “CMPLT” for all test items. Therefore, it is important to check SRT (“CMPLT”), DTC (No DTCs) and permanent DTC (No permanent DTCs) before the inspection.

SRT Item

The table below shows required self-diagnostic items to set the SRT to “CMPLT”.

SRT item (CONSULT-III indication)	Performance Priority*	Required self-diagnostic items to set the SRT to “CMPLT”	Corresponding DTC No.
CATALYST	2	Three way catalyst function	P0420
EVAP SYSTEM	2	EVAP control system purge flow monitoring	P0441
	1	EVAP control system	P0442
	2	EVAP control system	P0456
HO2S	2	Air fuel ratio (A/F) sensor 1	P0133
		Heated oxygen sensor 2	P0137
		Heated oxygen sensor 2	P0138
		Heated oxygen sensor 2	P0139
EGR/VVT SYSTEM	3	Intake value timing control function	P0011

*: If completion of several SRTs is required, perform driving patterns (DTC confirmation procedure), one by one based on the priority for models with CONSULT-III.

SRT Set Timing

SRT is set as “CMPLT” after self-diagnosis has been performed one or more times. Completion of SRT is done regardless of whether the result is OK or NG. The set timing is different between OK and NG results and is shown in the table below.

Self-diagnosis result		Example				
		Diagnosis	Ignition cycle ← ON → OFF	← ON → OFF	← ON → OFF	← ON →
All OK	Case 1	P0400	OK (1)	— (1)	OK (2)	— (2)
		P0402	OK (1)	— (1)	— (1)	OK (2)
		P1402	OK (1)	OK (2)	— (2)	— (2)
		SRT of EGR	“CMPLT”	“CMPLT”	“CMPLT”	“CMPLT”
	Case 2	P0400	OK (1)	— (1)	— (1)	— (1)
		P0402	— (0)	— (0)	OK (1)	— (1)
		P1402	OK (1)	OK (2)	— (2)	— (2)
		SRT of EGR	“INCMP”	“INCMP”	“CMPLT”	“CMPLT”
NG exists	Case 3	P0400	OK	OK	—	—
		P0402	—	—	—	—
		P1402	NG	—	NG	NG (Consecutive NG)
		(1st trip) DTC	1st trip DTC	—	1st trip DTC	DTC (= MIL “ON”)
		SRT of EGR	“INCMP”	“INCMP”	“INCMP”	“CMPLT”

OK: Self-diagnosis is carried out and the result is OK.

NG: Self-diagnosis is carried out and the result is NG.

—: Self-diagnosis is not carried out.

When all SRT related self-diagnoses showed OK results in a single cycle (Ignition OFF-ON-OFF), the SRT will indicate “CMPLT”. → Case 1 above

When all SRT related self-diagnoses showed OK results through several different cycles, the SRT will indicate “CMPLT” at the time the respective self-diagnoses have at least one OK result. → Case 2 above
If one or more SRT related self-diagnoses showed NG results in 2 consecutive cycles, the SRT will also indicate “CMPLT”. → Case 3 above
The table above shows that the minimum number of cycles for setting SRT as “INCMP” is one (1) for each self-diagnosis (Case 1 & 2) or two (2) for one of self-diagnoses (Case 3). However, in preparation for the state emissions inspection, it is unnecessary for each self-diagnosis to be executed twice (Case 3) for the following reasons:

- The SRT will indicate “CMPLT” at the time the respective self-diagnoses have one (1) OK result.
- The emissions inspection requires “CMPLT” of the SRT only with OK self-diagnosis results.
- When, during SRT driving pattern, 1st trip DTC (NG) is detected prior to “CMPLT” of SRT, the self-diagnosis memory must be erased from ECM after repair.
- If the 1st trip DTC is erased, all the SRT will indicate “INCMP”.

  NOTE:
  SRT can be set as “CMPLT” together with the DTC(s). Therefore, DTC check must always be carried out prior to the state emission inspection even though the SRT indicates “CMPLT”.

SRT Service Procedure
If a vehicle has failed the state emissions inspection due to one or more SRT items indicating “INCMP”, review the flowchart diagnostic sequence on the next page.

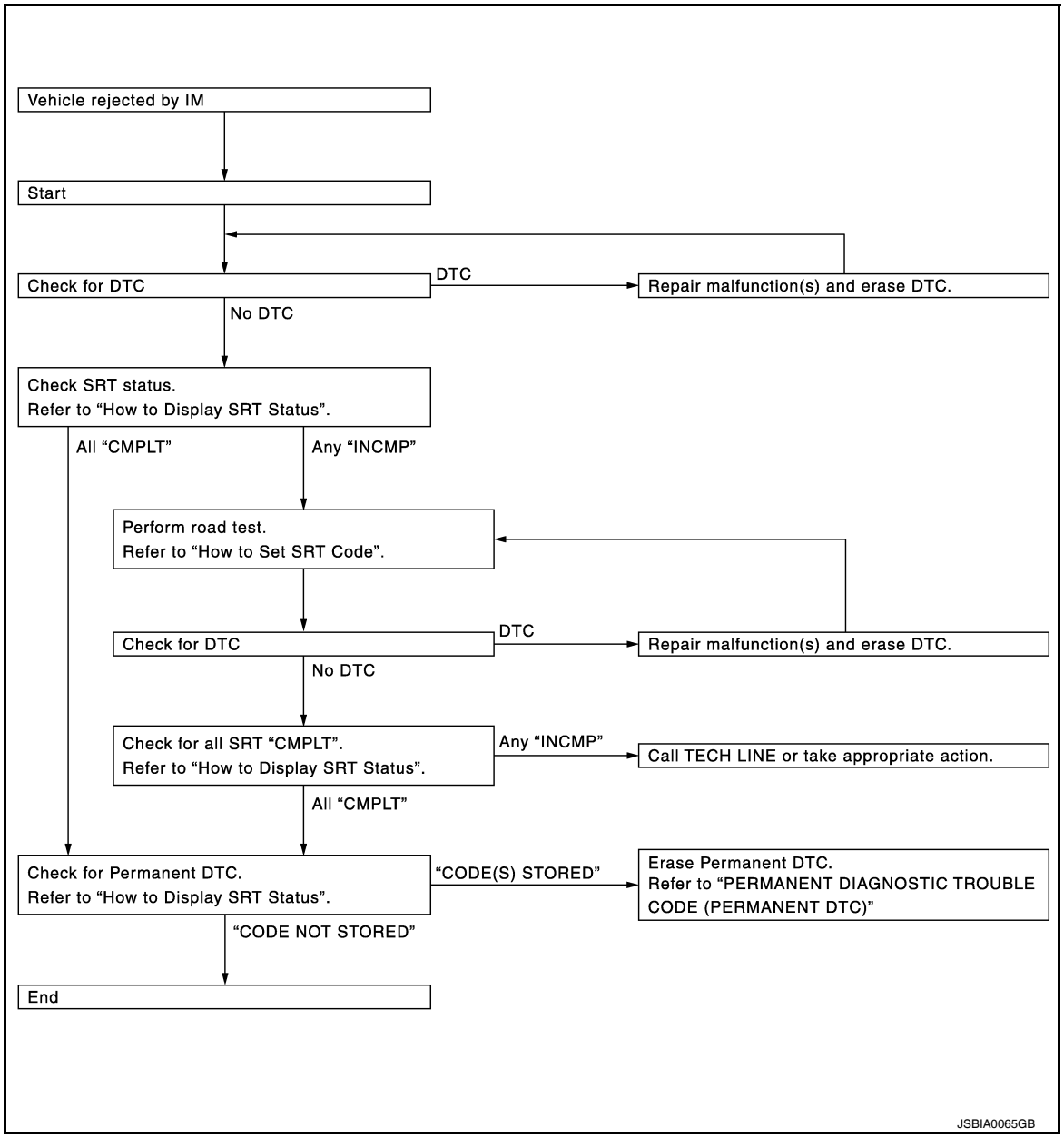

How to Display SRT Status

WITH CONSULT-III

Selecting “SRT STATUS” in “DTC CONFIRMATION” mode with CONSULT-III.
For items whose SRT codes are set, “CMPLT” is displayed on the CONSULT-III screen; for items whose SRT codes are not set, “INCMP” is displayed.

NOTE:

- Though displayed on the CONSULT-III screen, “HO2S HTR” is not SRT item.
- “SRT STATUS” provides the presence or absence of permanent DTCs stored in ECM memory.

WITH GST

Selecting Service $01 with GST (Generic Scan Tool)

NO TOOLS

A SRT code itself cannot be displayed, however SRT status can.

1. Turn ignition switch ON and wait 20 seconds.
2. SRT status is indicated as shown below.
   - When all SRT codes are set, MIL illuminates continuously.
   - When any SRT codes are not set, MIL will blink periodically for 10 seconds.

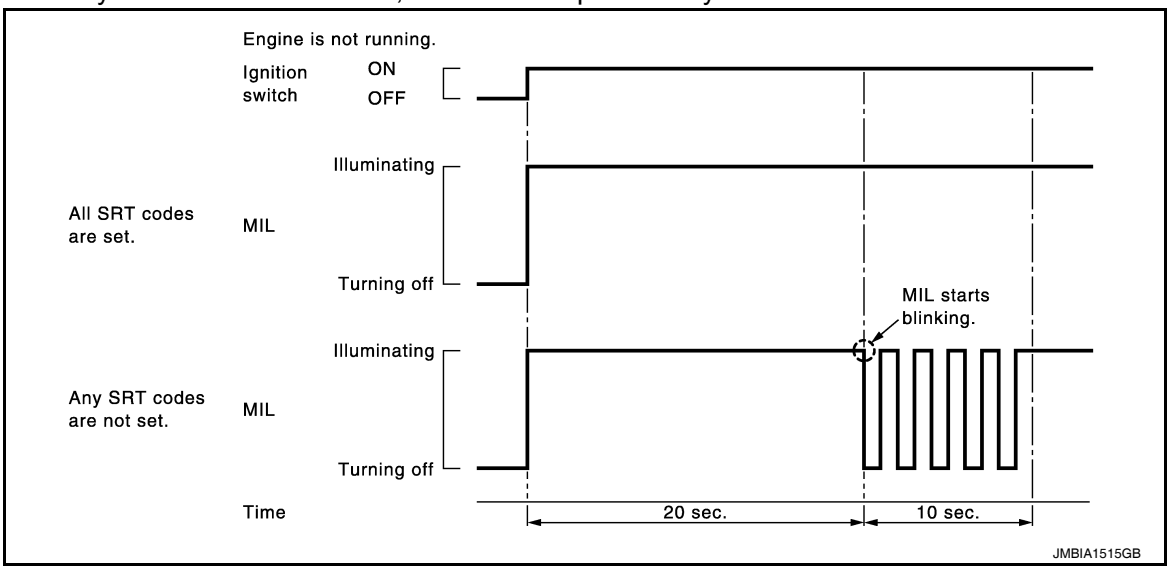

How to Set SRT Code

To set all SRT codes, self-diagnosis for the items indicated above must be performed one or more times. Each diagnosis may require a long period of actual driving under various conditions.

WITH CONSULT-III

Perform corresponding DTC Confirmation Procedure one by one based on Performance Priority in the table on "SRT Item".

WITHOUT CONSULT-III

The most efficient driving pattern in which SRT codes can be properly set is explained below. The driving pattern should be performed one or more times to set all SRT codes.

Driving Pattern

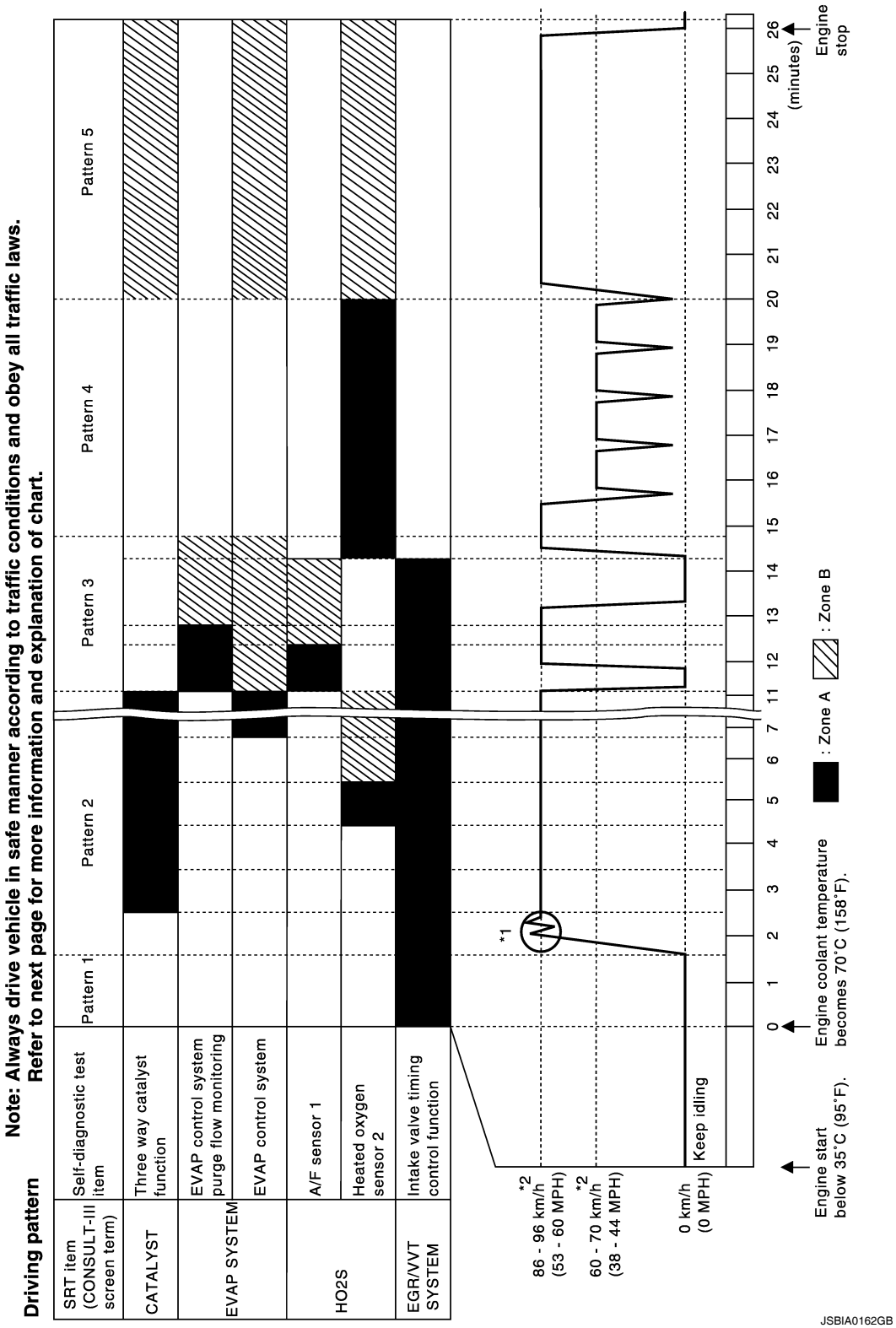

- The time required for each diagnosis varies with road surface conditions, weather, altitude, individual driving habits, etc.
  Zone A refers to the range where the time, required for the diagnosis under normal conditions*, is the shortest.
  Zone B refers to the range where the diagnosis can still be performed if the diagnosis is not completed within zone A.

*: Normal conditions refer to the following:

- Sea level
- Flat road
- Ambient air temperature: 20 - 30°C (68 - 86°F)
- Diagnosis is performed as quickly as possible under normal conditions.
  Under different conditions [For example: ambient air temperature other than 20 - 30°C (68 - 86°F)], diagnosis may also be performed.

Pattern 1:
- **The engine is started at the engine coolant temperature of −10 to 35°C (14 to 95°F) (where the voltage between the ECM terminal 38 and ground is 3.0 - 4.3 V).**
- **The engine must be operated at idle speed until the engine coolant temperature is greater than 70°C (158°F) (where the voltage between the ECM terminal 38 and ground is lower than 1.4 V).**
- **The engine is started at the fuel tank temperature of warmer than 0°C (32°F) (where the voltage between the ECM terminal 43 and ground is less than 4.1 V).**

Pattern 2:
- When steady-state driving is performed again even after it is interrupted, each diagnosis can be conducted. In this case, the time required for diagnosis may be extended.

Pattern 3:
- Operate vehicle following the driving pattern shown in the figure.
- Release the accelerator pedal during decelerating vehicle speed from 90 km/h (56 MPH) to 0 km/h (0 MPH).

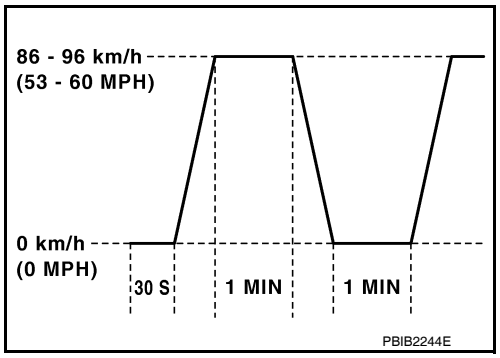

Pattern 4:
- Operate vehicle, following the driving pattern shown in the figure.
- Drive the vehicle in a proper gear at 60 km/h (38 MPH) and maintain the speed.
- Release the accelerator pedal fully at least 5 seconds.
- Repeat the above two steps at least 5 times.

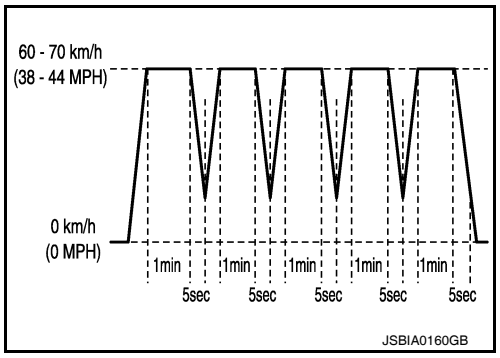

Pattern 5:
- The accelerator pedal must be held very steady during steady-state driving.
- If the accelerator pedal is moved, the test must be conducted all over again.

*1: Depress the accelerator pedal until vehicle speed is 90 km/h (56 MPH), then release the accelerator pedal and keep it released for more than 10 seconds. Depress the accelerator pedal until vehicle speed is 90 km/h (56 MPH) again.
*2: Checking the vehicle speed with GST is advised.

Suggested Transmission Gear Position for CVT Models
Set the selector lever in the D position.
Suggested upshift speeds for M/T models
Shown below are suggested vehicle speeds for shifting into a higher gear. These suggestions relate to fuel economy and vehicle performance. Actual upshift speeds will vary according to road conditions, the weather and individual driving habits.

	For normal acceleration in low altitude areas [less than 1,219 m (4,000 ft)]:	For quick acceleration in low altitude areas	For high attitude areas [over 1,219m (4,000 ft)]:
Gear change	ACCEL shift point km/h (MPH)	km/h (MPH)	km/h (MPH)
1st to 2nd	13 (8)	24 (15)	24 (15)
2nd to 3rd	27 (17)	40 (25)	40 (25)
3rd to 4th	40 (25)	53 (33)	65 (40)
4th to 5th	58 (36)	71 (44)	72 (45)
5th to 6th	82 (51)	82 (51)	82 (51)

Suggested Maximum Speed in Each Gear

Downshift to a lower gear if the engine is not running smoothly, or if you need to accelerate.

Do not exceed the maximum suggested speed (shown below) in any gear. For level road driving, use the highest gear suggested for that speed. Always observe posted speed limits and drive according to the road conditions to ensure safe operation. Do not over-rev the engine when shifting to a lower gear as it may cause engine damage or loss of vehicle control.

Gear	km/h (MPH)
1st	50 (30)
2nd	90 (55)
3rd	—
4th	—
5th	—
6th	—

PERMANENT DIAGNOSTIC TROUBLE CODE (PERMANENT DTC)

Permanent DTC is defined in SAE J1979/ISO 15031-5 Service $0A.

ECM stores a DTC issuing a command of turning on MIL as a permanent DTC and keeps storing the DTC as a permanent DTC until ECM judges that there is no presence of malfunction.

Permanent DTCs cannot be erased by using the Erase function of CONSULT-III or Generic Scan Tool (GST) and by disconnecting the battery to shut off power to ECM. This prevents a vehicle from passing the state emission inspection without repairing a malfunctioning part.

When not passing the state emission inspection due to more than one permanent DTC, permanent DTCs should be erased, referring to this manual.

NOTE:

- The important items in state emission inspection are that MIL is not ON, SRT test items are set, and permanent DTCs are not included.
- Permanent DTCs do not apply for regions that permanent DTCs are not regulated by law.

Permanent DTC Item

For permanent DTC items, MIL turns ON. Refer to EC-62, "Emission-related Diagnostic Information", “EMISSION-RELATED DIAGNOSTIC INFORMATION ITEMS”.

Permanent DTC Set Timing

The setting timing of permanent DTC is stored in ECM with the lighting of MIL when a DTC is confirmed.

Permanent DTC Service Procedure

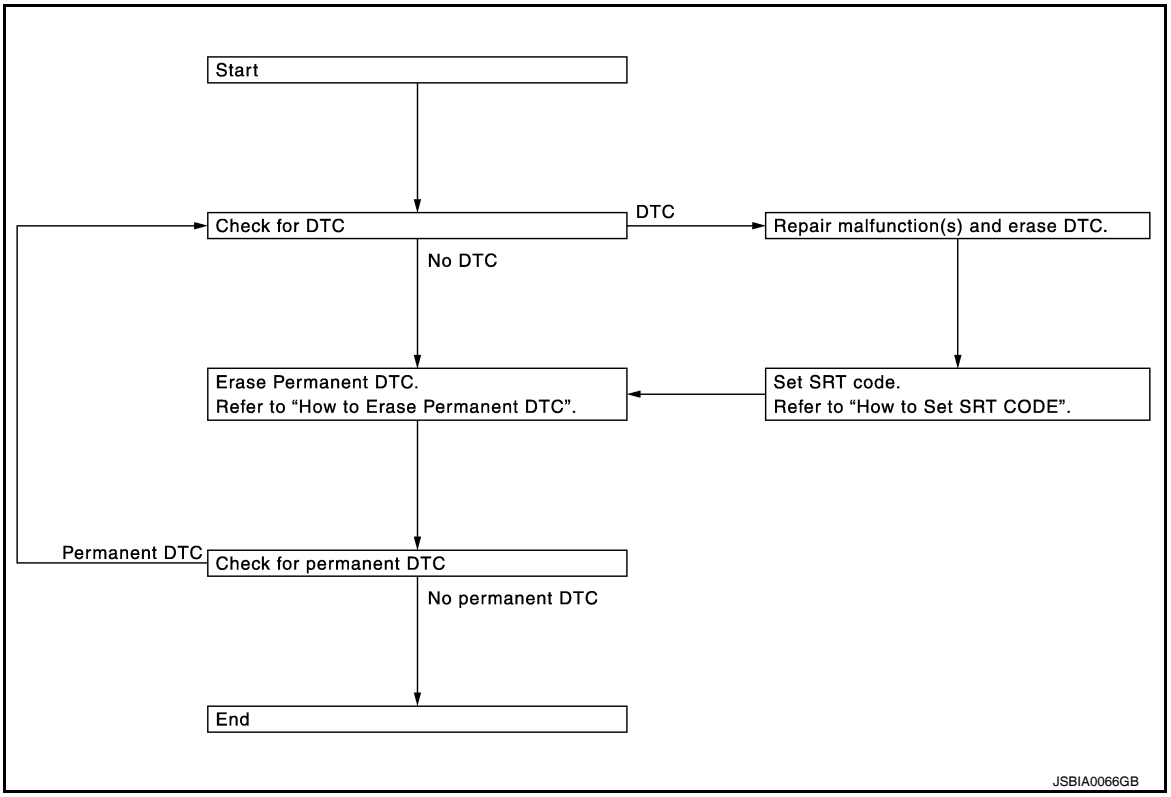

How to Display Permanent DTC Status

WITH CONSULT-III

1. Turn ignition switch OFF and wait at least 10 seconds.
2. Turn ignition switch ON.
3. Turn ignition switch OFF and wait at least 10 seconds.
4. Turn ignition switch ON.
5. Select "PERMANENT DTC STATUS" in "DTC & SRT CONFIRMATION" mode with CONSULT-III.

   NOTE:

   Permanent DTCs stored in ECM memory are displayed on the CONSULT-III screen to show if a driving pattern required for erasing permanent DTCs is complete (CMPLT) or incomplete (INCMP).

   CAUTION:

   Since the "PERMANENT DTC STATUS" screen displays the previous trip information, repeat the following twice to update the information: "Ignition switch OFF", "Wait for more than 10 seconds" and "Ignition switch ON".

PERMANENT DTC & SRT CONFIRMATION : PERMANENT DTC STATUS

CAUTION:
Turn ignition switch from ON to OFF twice to update the information on the status screen.

PERMANENT DTC	DRIVING PATTERN B	DRIVING PATTERN D
XXXX	INCMP	INCMP
XXXX	CMPLT	INCMP
XXXX	INCMP	CMPLT
XXXX	CMPLT	INCMP
XXXX	INCMP	INCMP
XXXX	INCMP	INCMP

The previous trip information is displayed.

JSBIA0062GB

WITH GST

1. Turn ignition switch OFF and wait at least 10 seconds.
2. Turn ignition switch ON.
3. Turn ignition switch OFF and wait at least 10 seconds.
4. Turn ignition switch ON.
5. Select Service $0A with GST (Generic Scan Tool).

TEST VALUE AND TEST LIMIT (GST ONLY — NOT APPLICABLE TO CONSULT-III)

The following is the information specified in Service $06 of SAE J1979/ISO 15031-5.

The test value is a parameter used to determine whether a system/circuit diagnostic test is OK or NG while being monitored by the ECM during self-diagnosis. The test limit is a reference value which is specified as the maximum or minimum value and is compared with the test value being monitored.

These data (test value and test limit) are specified by On Board Monitor ID (OBDMID), Test ID (TID), Unit and Scaling ID and can be displayed on the GST screen.

The items of the test value and test limit will be displayed with GST screen which items are provided by the ECM. (eg., if bank 2 is not applied on this vehicle, only the items of bank 1 are displayed)

Item	OBD-MID	Self-diagnostic test item	DTC	Test value and Test limit (GST display)		Description
				TID	Unit and Scaling ID	
HO2S	01H	Air fuel ratio (A/F) sensor 1 (Bank 1)	P0131	83H	0BH	Minimum sensor output voltage for test cycle
			P0131	84H	0BH	Maximum sensor output voltage for test cycle
			P0130	85H	0BH	Minimum sensor output voltage for test cycle
			P0130	86H	0BH	Maximum sensor output voltage for test cycle
			P0133	87H	04H	Response rate: Response ratio (Lean to Rich)
			P0133	88H	04H	Response rate: Response ratio (Rich to Lean)
			P2A00	89H	84H	The amount of shift in air fuel ratio
			P2A00	8AH	84H	The amount of shift in air fuel ratio
			P0130	8BH	0BH	Difference in sensor output voltage
			P0133	8CH	83H	Response gain at the limited frequency
			P014C	8DH	04H	O2 Sensor Slow Response - Rich to Lean Bank 1 Sensor 1
			P014C	8EH	04H	O2 Sensor Slow Response - Rich to Lean Bank 1 Sensor 1
			P014D	8FH	84H	O2 Sensor Slow Response - Lean to Rich Bank 1 Sensor 1
			P014D	90H	84H	O2 Sensor Slow Response - Lean to Rich Bank 1 Sensor 1
			P015A	91H	01H	O2 Sensor Delayed Response - Rich to Lean Bank 1 Sensor 1
			P015A	92H	01H	O2 Sensor Delayed Response - Rich to Lean Bank 1 Sensor 1
			P015B	93H	01H	O2 Sensor Delayed Response - Lean to Rich Bank 1 Sensor 1
			P015B	94H	01H	O2 Sensor Delayed Response - Lean to Rich Bank 1 Sensor 1
	02H	Heated oxygen sensor 2 (Bank 1)	P0138	07H	0CH	Minimum sensor output voltage for test cycle
			P0137	08H	0CH	Maximum sensor output voltage for test cycle
			P0138	80H	0CH	Sensor output voltage
			P0139	81H	0CH	Difference in sensor output voltage
	03H	Heated oxygen sensor 3 (Bank 1)	P0143	07H	0CH	Minimum sensor output voltage for test cycle
			P0144	08H	0CH	Maximum sensor output voltage for test cycle
			P0146	80H	0CH	Sensor output voltage
			P0145	81H	0CH	Difference in sensor output voltage

Item	OBD-MID	Self-diagnostic test item	DTC	Test value and Test limit (GST display)		Description
				TID	Unit and Scaling ID	
HO2S	05H	Air fuel ratio (A/F) sensor 1 (Bank 2)	P0151	83H	0BH	Minimum sensor output voltage for test cycle
			P0151	84H	0BH	Maximum sensor output voltage for test cycle
			P0150	85H	0BH	Minimum sensor output voltage for test cycle
			P0150	86H	0BH	Maximum sensor output voltage for test cycle
			P0153	87H	04H	Response rate: Response ratio (Lean to Rich)
			P0153	88H	04H	Response rate: Response ratio (Rich to Lean)
			P2A03	89H	84H	The amount of shift in air fuel ratio
			P2A03	8AH	84H	The amount of shift in air fuel ratio
			P0150	8BH	0BH	Difference in sensor output voltage
			P0153	8CH	83H	Response gain at the limited frequency
			P014E	8DH	04H	O2 Sensor Slow Response - Rich to Lean Bank 2 Sensor 1
			P014E	8EH	04H	O2 Sensor Slow Response - Rich to Lean Bank 2 Sensor 1
			P014F	8FH	84H	O2 Sensor Slow Response - Lean to Rich Bank 2 Sensor 1
			P014F	90H	84H	O2 Sensor Slow Response - Lean to Rich Bank 2 Sensor 1
			P015C	91H	01H	O2 Sensor Delayed Response - Rich to Lean Bank 2 Sensor 1
			P015C	92H	01H	O2 Sensor Delayed Response - Rich to Lean Bank 2 Sensor 1
			P015D	93H	01H	O2 Sensor Delayed Response - Lean to Rich Bank 2 Sensor 1
			P015D	94H	01H	O2 Sensor Delayed Response - Lean to Rich Bank 2 Sensor 1
	06H	Heated oxygen sensor 2 (Bank 2)	P0158	07H	0CH	Minimum sensor output voltage for test cycle
			P0157	08H	0CH	Maximum sensor output voltage for test cycle
			P0158	80H	0CH	Sensor output voltage
			P0159	81H	0CH	Difference in sensor output voltage
	07H	Heated oxygen sensor 3 (Bank2)	P0163	07H	0CH	Minimum sensor output voltage for test cycle
			P0164	08H	0CH	Maximum sensor output voltage for test cycle
			P0166	80H	0CH	Sensor output voltage
			P0165	81H	0CH	Difference in sensor output voltage

Item	OBD-MID	Self-diagnostic test item	DTC	Test value and Test limit (GST display)		Description
				TID	Unit and Scaling ID	
CATA-LYST	21H	Three way catalyst function (Bank1)	P0420	80H	01H	O2 storage index
			P0420	82H	01H	Switching time lag engine exhaust index value
			P2423	83H	0CH	Difference in 3rd O2 sensor output voltage
			P2423	84H	84H	O2 storage index in HC trap catalyst
	22H	Three way catalyst function (Bank2)	P0430	80H	01H	O2 storage index
			P0430	82H	01H	Switching time lag engine exhaust index value
			P2424	83H	0CH	Difference in 3rd O2 sensor output voltage
			P2424	84H	84H	O2 storage index in HC trap catalyst
EGR SYSTEM	31H	EGR function	P0400	80H	96H	Low Flow Faults: EGR temp change rate (short term)
			P0400	81H	96H	Low Flow Faults: EGR temp change rate (long term)
			P0400	82H	96H	Low Flow Faults: Difference between max EGR temp and EGR temp under idling condition
			P0400	83H	96H	Low Flow Faults: Max EGR temp
			P1402	84H	96H	High Flow Faults: EGR temp increase rate
VVT SYSTEM	35H	VVT Monitor (Bank1)	P0011	80H	9DH	VTC intake function diagnosis (VTC alignment check diagnosis)
			P0014	81H	9DH	VTC exhaust function diagnosis (VTC alignment check diagnosis)
			P0011	82H	9DH	VTC intake function diagnosis (VTC drive failure diagnosis)
			P0014	83H	9DH	VTC exhaust function diagnosis (VTC drive failure diagnosis)
	36H	VVT Monitor (Bank2)	P0021	80H	9DH	VTC intake function diagnosis (VTC alignment check diagnosis)
			P0024	81H	9DH	VTC exhaust function diagnosis (VTC alignment check diagnosis)
			P0021	82H	9DH	VTC intake function diagnosis (VTC drive failure diagnosis)
			P0024	83H	9DH	VTC exhaust function diagnosis (VTC drive failure diagnosis)

Item	OBD-MID	Self-diagnostic test item	DTC	Test value and Test limit (GST display)		Description
				TID	Unit and Scaling ID	
EVAP SYSTEM	39H	EVAP control system leak (Cap Off)	P0455	80H	0CH	Difference in pressure sensor output voltage before and after pull down
	3BH	EVAP control system leak (Small leak)	P0442	80H	05H	Leak area index (for more than 0.04 inch)
	3CH	EVAP control system leak (Very small leak)	P0456	80H	05H	Leak area index (for more than 0.02 inch)
			P0456	81H	FDH	Maximum internal pressure of EVAP system during monitoring
			P0456	82H	FDH	Internal pressure of EVAP system at the end of monitoring
	3DH	Purge flow system	P0441	83H	0CH	Difference in pressure sensor output voltage before and after vent control valve close
O2 SENSOR HEATER	41H	A/F sensor 1 heater (Bank 1)	Low Input:P0031 High Input:P0032	81H	0BH	Converted value of Heater electric current to voltage
	42H	Heated oxygen sensor 2 heater (Bank 1)	Low Input:P0037 High Input:P0038	80H	0CH	Converted value of Heater electric current to voltage
	43H	Heated oxygen sensor 3 heater (Bank 1)	P0043	80H	0CH	Converted value of Heater electric current to voltage
	45H	A/F sensor 1 heater (Bank 2)	Low Input:P0051 High Input:P0052	81H	0BH	Converted value of Heater electric current to voltage
	46H	Heated oxygen sensor 2 heater (Bank 2)	Low Input:P0057 High Input:P0058	80H	0CH	Converted value of Heater electric current to voltage
	47H	Heated oxygen sensor 3 heater (Bank 2)	P0063	80H	0CH	Converted value of Heater electric current to voltage
Secondary Air	71H	Secondary Air system	P0411	80H	01H	Secondary Air Injection System Incorrect Flow Detected
			Bank1: P0491 Bank2: P0492	81H	01H	Secondary Air Injection System Insufficient Flow
			P2445	82H	01H	Secondary Air Injection System Pump Stuck Off
			P2448	83H	01H	Secondary Air Injection System High Airflow
			Bank1: P2440 Bank2: P2442	84H	01H	Secondary Air Injection System Switching Valve Stuck Open
			P2440	85H	01H	Secondary Air Injection System Switching Valve Stuck Open
			P2444	86H	01H	Secondary Air Injection System Pump Stuck On
FUEL SYSTEM	81H	Fuel injection system function (Bank 1)	P0171 or P0172	80H	2FH	Long term fuel trim
			P0171 or P0172	81H	24H	The number of lambda control clamped
	82H	Fuel injection system function (Bank 2)	P0174 or P0175	80H	2FH	Long term fuel trim
			P0174 or P0175	81H	24H	The number of lambda control clamped

Item	OBD-MID	Self-diagnostic test item	DTC	Test value and Test limit (GST display)		Description
				TID	Unit and Scaling ID	
MISFIRE	A1H	Multiple Cylinder Misfires	P0301	80H	24H	Misfiring counter at 1000 revolution of the first cylinder
			P0302	81H	24H	Misfiring counter at 1000 revolution of the second cylinder
			P0303	82H	24H	Misfiring counter at 1000 revolution of the third cylinder
			P0304	83H	24H	Misfiring counter at 1000 revolution of the fourth cylinder
			P0305	84H	24H	Misfiring counter at 1000 revolution of the fifth cylinder
			P0306	85H	24H	Misfiring counter at 1000 revolution of the sixth cylinder
			P0307	86H	24H	Misfiring counter at 1000 revolution of the seventh cylinder
			P0308	87H	24H	Misfiring counter at 1000 revolution of the eighth cylinder
			P0300	88H	24H	Misfiring counter at 1000 revolution of the multiple cylinders
			P0301	89H	24H	Misfiring counter at 200 revolution of the first cylinder
			P0302	8AH	24H	Misfiring counter at 200 revolution of the second cylinder
			P0303	8BH	24H	Misfiring counter at 200 revolution of the third cylinder
			P0304	8CH	24H	Misfiring counter at 200 revolution of the fourth cylinder
			P0305	8DH	24H	Misfiring counter at 200 revolution of the fifth cylinder
			P0306	8EH	24H	Misfiring counter at 200 revolution of the sixth cylinder
			P0307	8FH	24H	Misfiring counter at 200 revolution of the seventh cylinder
			P0308	90H	24H	Misfiring counter at 200 revolution of the eighth cylinder
			P0300	91H	24H	Misfiring counter at 1000 revolution of the single cylinder
			P0300	92H	24H	Misfiring counter at 200 revolution of the single cylinder
			P0300	93H	24H	Misfiring counter at 200 revolution of the multiple cylinders

Item	OBD-MID	Self-diagnostic test item	DTC	Test value and Test limit (GST display)		Description
				TID	Unit and Scaling ID	
MISFIRE	A2H	No. 1 Cylinder Misfire	P0301	0BH	24H	EWMA (Exponential Weighted Moving Average) misfire counts for last 10 driving cycles
			P0301	0CH	24H	Misfire counts for last/current driving cycles
	A3H	No. 2 Cylinder Misfire	P0302	0BH	24H	EWMA (Exponential Weighted Moving Average) misfire counts for last 10 driving cycles
			P0302	0CH	24H	Misfire counts for last/current driving cycles
	A4H	No. 3 Cylinder Misfire	P0303	0BH	24H	EWMA (Exponential Weighted Moving Average) misfire counts for last 10 driving cycles
			P0303	0CH	24H	Misfire counts for last/current driving cycles
	A5H	No. 4 Cylinder Misfire	P0304	0BH	24H	EWMA (Exponential Weighted Moving Average) misfire counts for last 10 driving cycles
			P0304	0CH	24H	Misfire counts for last/current driving cycles
	A6H	No. 5 Cylinder Misfire	P0305	0BH	24H	EWMA (Exponential Weighted Moving Average) misfire counts for last 10 driving cycles
			P0305	0CH	24H	Misfire counts for last/current driving cycles
	A7H	No. 6 Cylinder Misfire	P0306	0BH	24H	EWMA (Exponential Weighted Moving Average) misfire counts for last 10 driving cycles
			P0306	0CH	24H	Misfire counts for last/current driving cycles
	A8H	No. 7 Cylinder Misfire	P0307	0BH	24H	EWMA (Exponential Weighted Moving Average) misfire counts for last 10 driving cycles
			P0307	0CH	24H	Misfire counts for last/current driving cycles
	A9H	No. 8 Cylinder Misfire	P0308	0BH	24H	EWMA (Exponential Weighted Moving Average) misfire counts for last 10 driving cycles
			P0308	0CH	24H	Misfire counts for last/current driving cycles

HOW TO ERASE EMISSION-RELATED DIAGNOSTIC INFORMATION

How to Erase DTC

With CONSULT-III

NOTE:

- If the ignition switch stays ON after repair work, be sure to turn ignition switch OFF once. Wait at least 10 seconds and then turn it ON (engine stopped) again.
- If the DTC is not for CVT related items, skip step 1.

1. Erase DTC in TCM.
2. Select "ENGINE" with CONSULT-III.
3. Select "SELF-DIAG RESULTS".

4. Touch "ERASE". (The DTC in the ECM will be erased.)

With GST

NOTE:

If the ignition switch stays ON after repair work, be sure to turn ignition switch OFF once. Wait at least 10 seconds and then turn it ON (engine stopped) again.

1. Select Service $04 with GST.

No Tools

NOTE:

If the ignition switch stays ON after repair work, be sure to turn ignition switch OFF once. Wait at least 10 seconds and then turn it ON (engine stopped) again.

1. Erase DTC in ECM. Refer to How to Erase Diagnostic Test Mode II (Self-diagnostic Results).

- **If the battery is disconnected, the emission-related diagnostic information will be lost within 24 hours.**
- **The following data are cleared when the ECM memory is erased.**

- Diagnostic trouble codes
- 1st trip diagnostic trouble codes
- Freeze frame data
- 1st trip freeze frame data
- System readiness test (SRT) codes
- Test values

How to Erase Permanent DTC

When a DTC is stored in ECM

- When a DTC is stored in ECM and MIL is ON, a permanent DTC is erased with MIL shutoff if the same malfunction is not detected after performing the driving pattern for MIL shutoff three times in a raw.

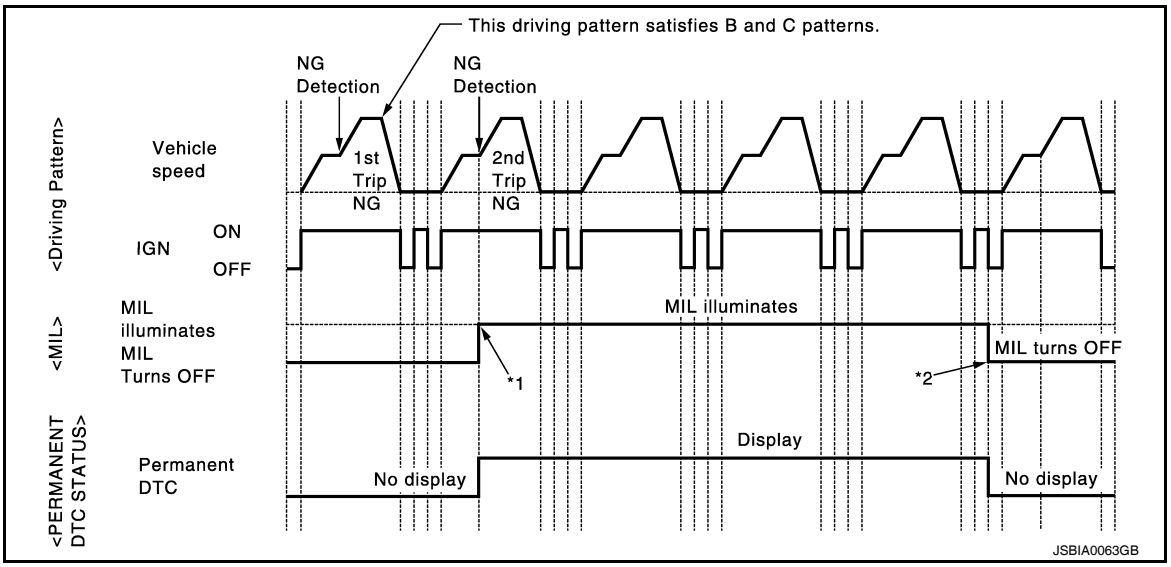

*1: When the same malfunction is detected in two consecutive trips, MIL will illuminate.

*2: MIL will turn off after vehicle is driven 3 times (pattern B) without any malfunctions.

When a DTC is not stored in ECM

- The erasing method depends on a permanent DTC stored in ECM. Refer to the following table.

×: Applicable —: Not applicable

Group*	Perform "DTC CONFIRMATION PROCEDURE" for applicable DTCs.	Driving pattern	
		B	D
A	×	—	—
B	—	×	×

*: For group, refer to EC-62, "Emission-related Diagnostic Information", "EMISSION-RELATED DIAGNOSTIC INFORMATION ITEMS".

Group A

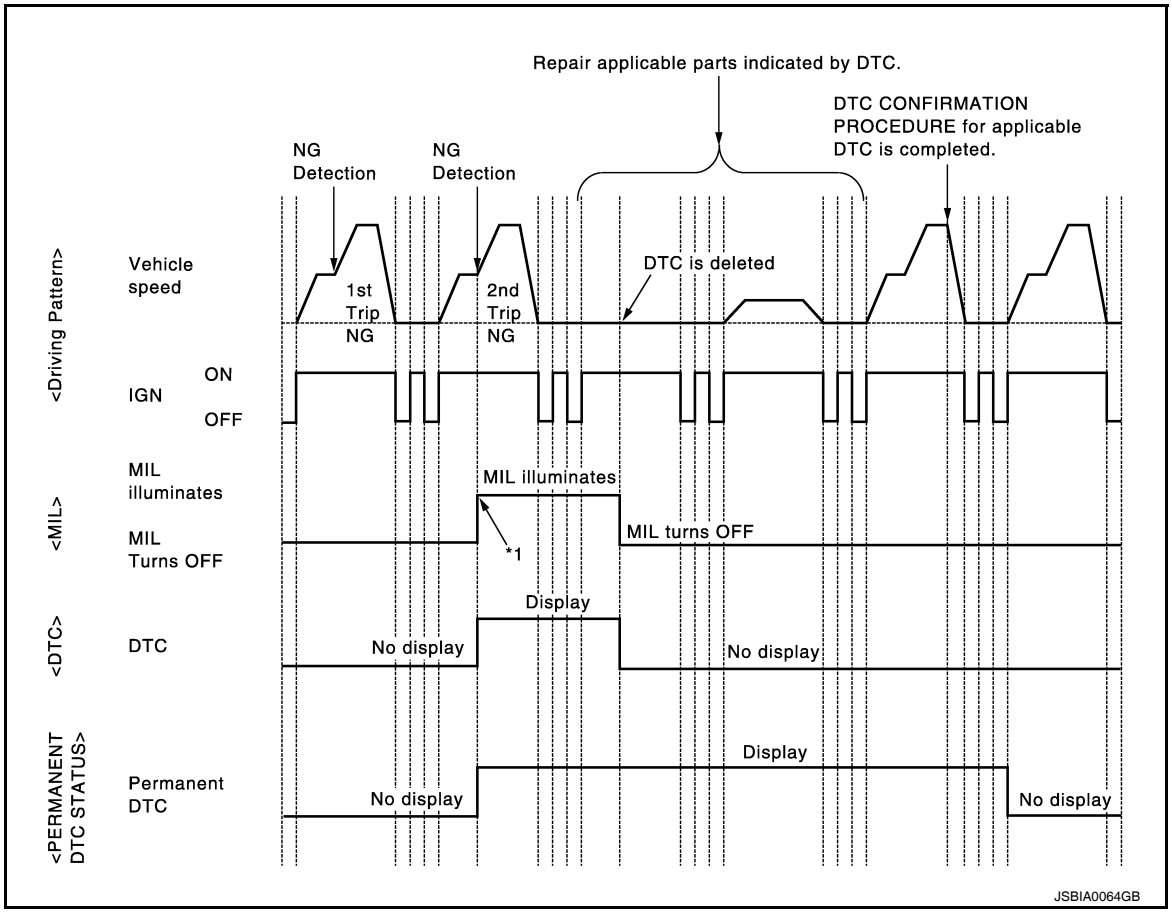

*1: When the same malfunction is detected in two consecutive trips, MIL will illuminate.

1. Turn ignition switch OFF and wait at least 10 seconds.
2. Turn ignition switch ON.
3. Turn ignition switch OFF and wait at least 10 seconds.
4. Turn ignition switch ON.
5. Check permanent DTC. Refer to EC-62, "Emission-related Diagnostic Information", “How to Display Permanent DTC Status”.
6. Perform “DTC CONFIRMATION PROCEDURE” for DTCs which are the same as permanent DTCs stored in ECM.
7. Turn ignition switch OFF and wait at least 10 seconds.
8. Turn ignition switch ON.
9. Turn ignition switch OFF and wait at least 10 seconds.
10. Turn ignition switch ON.
11. Check permanent DTC. Refer to EC-62, "Emission-related Diagnostic Information", “How to Display Permanent DTC Status”.
12. Check that the permanent DTCs have been erased.

Group B

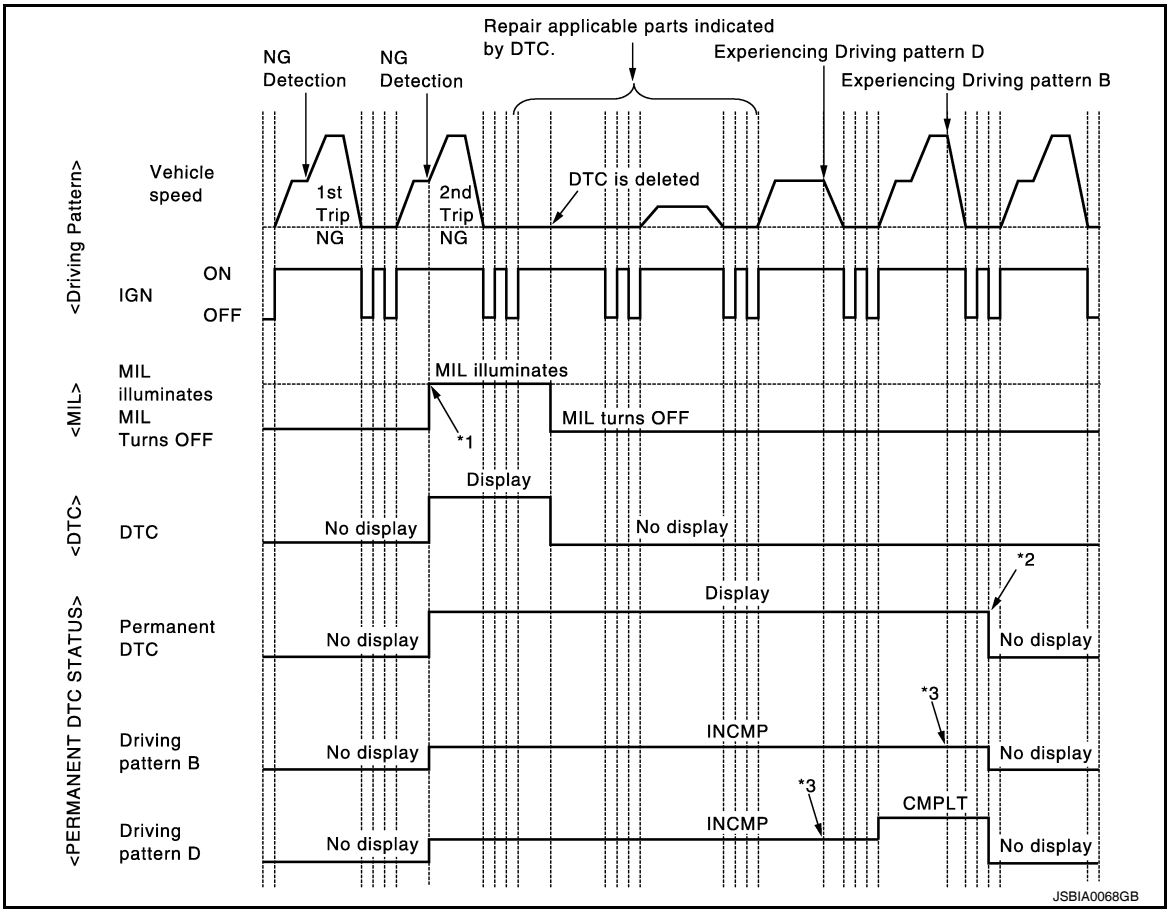

*1: When the same malfunction is detected in two consecutive trips, MIL will illuminate.

*2: After experiencing Driving pattern B and D, permanent DTC is erased.

*3: Indication does not change unless the ignition switch is turned from ON to OFF twice even after experiencing Driving pattern B or D.

NOTE:

- Drive the vehicle according to only driving patterns indicating “INCMP” in driving patterns B and D on the “PERMANENT DTC STATUS” screen.
- When experiencing both driving pattern B and D during the same trip, the experience of driving pattern D is counted by priority.

1. Turn ignition switch OFF and wait at least 10 seconds.
2. Turn ignition switch ON.
3. Turn ignition switch OFF and wait at least 10 seconds.
4. Turn ignition switch ON.
5. Check permanent DTC. Refer to EC-62, "Emission-related Diagnostic Information", “How to Display Permanent DTC Status”.
6. Start engine and warm it up to normal operating temperature.
7. Drive the vehicle according to driving pattern D.
   CAUTION:
   - **Always drive at a safe speed.**
   - **Never erase self-diagnosis results.**
   - **If self-diagnosis results are erased during the trip of driving pattern B or D, the counter of driving pattern B or D is reset.**
   - **If self-diagnosis results are erased during the trip of driving pattern B or D, an experience of driving pattern B and D during the same trip is not counted up.**
8. Turn ignition switch OFF and wait at least 10 seconds.
9. Turn ignition switch ON.
10. Turn ignition switch OFF and wait at least 10 seconds.
11. Turn ignition switch ON.
12. Use “PERMANENT DTC WORK SUPPORT” to drive the vehicle according to driving pattern B.

CAUTION:
- **Always drive at a safe speed.**
- **Never erase self-diagnosis results.**
- **If self-diagnosis results are erased during the trip of driving pattern B or D, the counter of driving pattern B or D is reset.**
- **If self-diagnosis results are erased during the trip of driving pattern B or D, an experience of driving pattern B and D during the same trip is not counted up.**

13. Turn ignition switch OFF and wait at least 10 seconds.
14. Turn ignition switch ON.
15. Turn ignition switch OFF and wait at least 10 seconds.
16. Turn ignition switch ON.
17. Check permanent DTC. Refer to EC-62, "Emission-related Diagnostic Information", “How to Display Permanent DTC Status”.
18. Check that the permanent DTCs have been erased.

DRIVING PATTERN

Driving Pattern B
- Driving pattern B means a trip satisfying the following conditions.
- Engine speed reaches 400 rpm or more.
- Water temperature reaches 70°C (158°F) ore more.
- Vehicle speed of 70 – 120 km/h (44 – 75 MPH) is maintained for 60 seconds or more under the control of closed loop.
- Vehicle speed of 30 – 60 km/h (19 – 37 MPH) is maintained for 10 seconds or more under the control of closed loop.
- Under the closed loop control condition, the following state reaches 12 seconds or more in total: Vehicle speed of 4 km/h (2 MPH) or less with idling condition.
- The state of driving at 10 km/h (7 MPH) or more reaches 10 minutes or more in total.
- A lapse of 22 minutes or more after engine start.

CAUTION:
Always drive at a safe speed.
NOTE:
- Drive the vehicle at a constant velocity.
- When the same malfunction is detected regardless of driving conditions, reset the counter of driving pattern B.
- When the above conditions are satisfied without detecting the same malfunction, reset the counter of driving pattern B.

Driving Pattern D
- Driving pattern D means operating vehicle as per the following.
- The state of driving at 40 km/h (25 MPH) reaches 300 seconds or more in total.
- Idle speed lasts 30 seconds or more.
- A lapse of 600 seconds or more after engine start.

CAUTION:
Always drive at a safe speed.
NOTE:
- When the same malfunction is detected regardless of driving conditions, reset the counter of driving pattern D.
- When the above conditions are satisfied without detecting the same malfunction, reset the counter of driving pattern D.

Malfunction Indicator Lamp (MIL)

INFOID:0000000005284559

DESCRIPTION

The MIL is located on the instrument panel.

1. The MIL will light up when the ignition switch is turned ON without the engine running. This is a bulb check.
   If the MIL does not light up, refer to DI-35 or see EC-575.
2. When the engine is started, the MIL should go off.
   If the MIL remains on, the on board diagnostic system has detected an engine system malfunction.

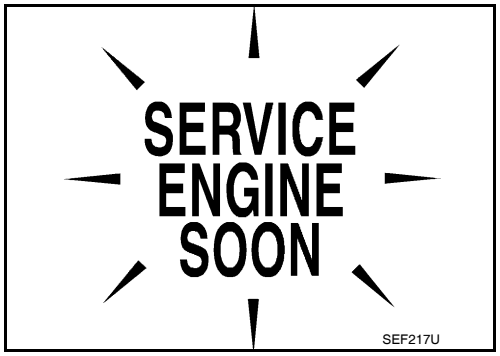

ON BOARD DIAGNOSTIC SYSTEM FUNCTION

The on board diagnostic system has the following three functions.

Diagnostic Test Mode	KEY and ENG. Status	Function	Explanation of Function
Mode I	Ignition switch in ON position Engine stopped	BULB CHECK	This function checks the MIL bulb for damage (blown, open circuit, etc.). If the MIL does not come on, check MIL circuit.
	Engine running	MALFUNCTION WARNING	This is a usual driving condition. When a malfunction is detected twice in two consecutive driving cycles (two trip detection logic), the MIL will light up to inform the driver that a malfunction has been detected. The following malfunctions will light up or blink the MIL in the 1st trip. • Misfire (Possible three way catalyst damage) • One trip detection diagnoses
Mode II	Ignition switch in ON position Engine stopped	SELF-DIAGNOSTIC RESULTS	This function allows DTCs and 1st trip DTCs to be read.

When there is an open circuit on MIL circuit, the ECM cannot warn the driver by MIL lighting up when there is malfunction on engine control system.
Therefore, when electrical controlled throttle and part of ECM related diagnoses are continuously detected as NG for 5 trips, ECM warns the driver that engine control system malfunctions and MIL circuit is open by means of operating fail-safe function.
The fail-safe function also operates when above diagnoses except MIL circuit are detected, and demands the driver to repair the malfunction.

Engine operating condition in fail-safe mode	Engine speed will not rise more than 2,500 rpm due to the fuel cut

MIL Flashing Without DTC

When any SRT codes are not set, MIL may flash without DTC. For the details, refer to EC-62, "Emission-related Diagnostic Information".

HOW TO SWITCH DIAGNOSTIC TEST MODE

NOTE:

- **It is better to count the time accurately with a clock.**

- **It is impossible to switch the diagnostic mode when an accelerator pedal position sensor circuit has a malfunction.**
- **Always ECM returns to Diagnostic Test Mode I after ignition switch is turned OFF.**

How to Set Diagnostic Test Mode II (Self-diagnostic Results)

1. Confirm that accelerator pedal is fully released, turn ignition switch ON and wait 3 seconds.
2. Repeat the following procedure quickly five times within 5 seconds.

a. Fully depress the accelerator pedal.
b. Fully release the accelerator pedal.

3. Wait 7 seconds, fully depress the accelerator pedal and keep it for approx. 10 seconds until the MIL starts blinking.
4. Fully release the accelerator pedal.
   ECM has entered to Diagnostic Test Mode II (Self-diagnostic results).

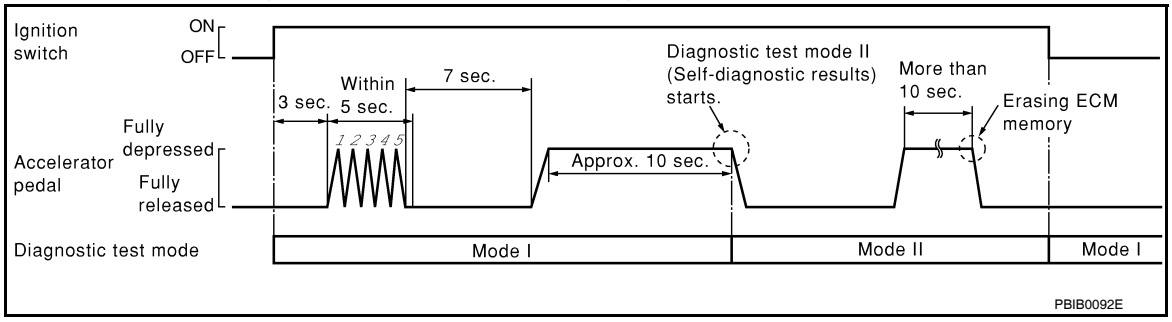

How to Erase Diagnostic Test Mode II (Self-diagnostic Results)

1. Set ECM in Diagnostic Test Mode II (Self-diagnostic results).
   Refer to "How to Set Diagnostic Test Mode II (Self-diagnostic Results)".
2. Fully depress the accelerator pedal and keep it for more than 10 seconds.
   The emission-related diagnostic information has been erased from the backup memory in the ECM.
3. Fully release the accelerator pedal, and confirm the DTC 0000 is displayed.

DIAGNOSTIC TEST MODE I — BULB CHECK

In this mode, the MIL on the instrument panel should stay ON. If it remains OFF, check the bulb.
Refer to DI-35 or EC-575.

DIAGNOSTIC TEST MODE I — MALFUNCTION WARNING

MIL	Condition
ON	When the malfunction is detected.
OFF	No malfunction

These DTC numbers are clarified in Diagnostic Test Mode II (SELF-DIAGNOSTIC RESULTS)

DIAGNOSTIC TEST MODE II — SELF-DIAGNOSTIC RESULTS

In this mode, the DTC and 1st trip DTC are indicated by the number of blinks of the MIL as shown below.
The DTC and 1st trip DTC are displayed at the same time. If the MIL does not illuminate in diagnostic test mode I (Malfunction warning), all displayed items are 1st trip DTCs. If only one code is displayed when the MIL illuminates in diagnostic test mode II (SELF-DIAGNOSTIC RESULTS), it is a DTC; if two or more codes are displayed, they may be either DTCs or 1st trip DTCs. DTC No. is same as that of 1st trip DTC. These uniden-

tified codes can be identified by using the CONSULT-III or GST. A DTC will be used as an example for how to read a code.

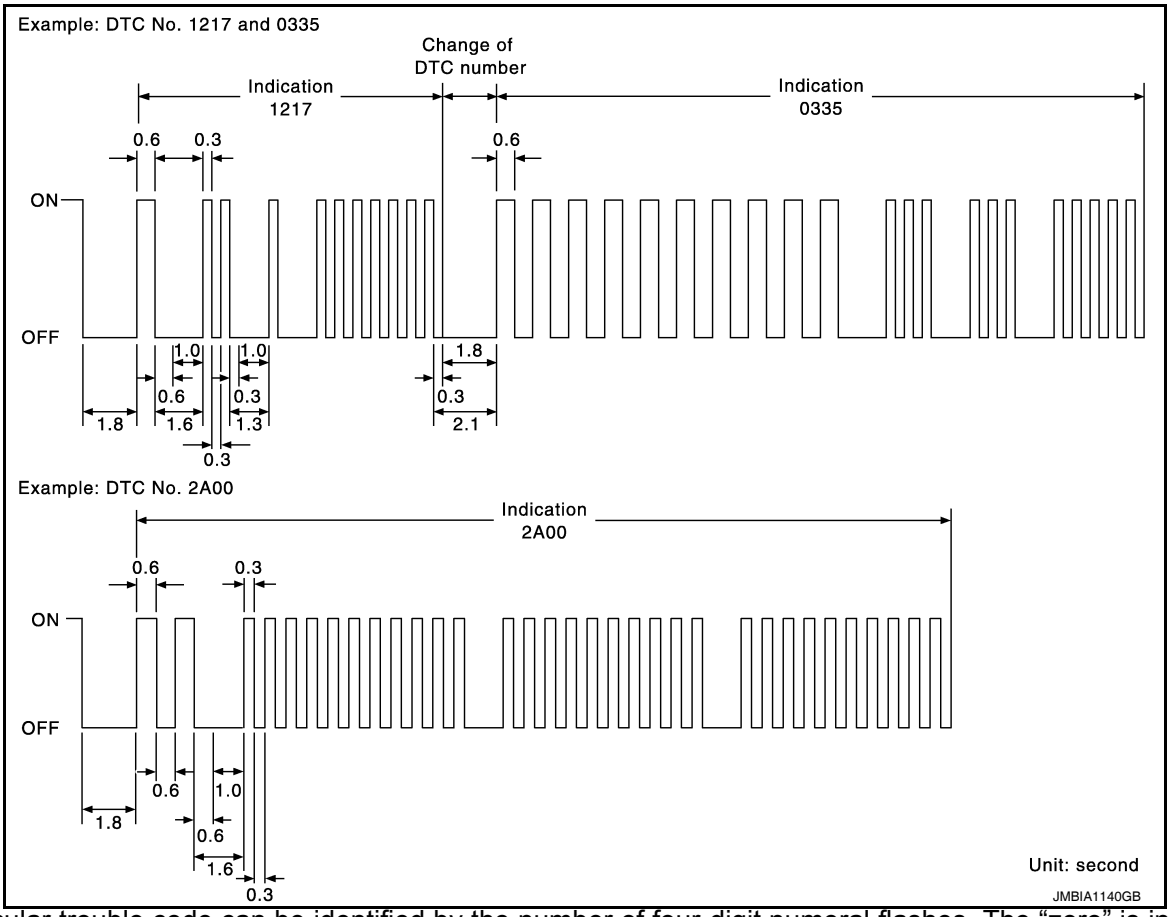

A particular trouble code can be identified by the number of four-digit numeral flashes. The “zero” is indicated by the number of ten flashes. The “A” is indicated by the number of eleven flash. The length of time the 1,000th-digit numeral flashes on and off is 1.2 seconds consisting of an ON (0.6-second) - OFF (0.6-second) cycle. The 100th-digit numeral and lower digit numerals consist of a 0.3-second ON and 0.3-second OFF cycle. A change from one digit numeral to another occurs at an interval of 1.0-second OFF. In other words, the later numeral appears on the display 1.3 seconds after the former numeral has disappeared.
A change from one trouble code to another occurs at an interval of 1.8-second OFF.
In this way, all the detected malfunctions are classified by their DTC numbers. The DTC 0000 refers to no malfunction. (See EC-24)

How to Erase Diagnostic Test Mode II (Self-diagnostic Results)
The DTC can be erased from the back-up memory in the ECM by depressing accelerator pedal.
Refer to "How to Erase Diagnostic Test Mode II (Self-diagnostic Results)".
- **If the battery is disconnected, the DTC will be lost from the backup memory within 24 hours.**
- **Be careful not to erase the stored memory before starting trouble diagnoses.**

OBD System Operation Chart

INFOID:0000000005284560

RELATIONSHIP BETWEEN MIL, 1ST TRIP DTC, DTC, AND DETECTABLE ITEMS

- When a malfunction is detected for the first time, the 1st trip DTC and the 1st trip freeze frame data are stored in the ECM memory.
- When the same malfunction is detected in two consecutive trips, the DTC and the freeze frame data are stored in the ECM memory, and the MIL will come on. For details, refer to EC-61, "Two Trip Detection Logic".
- The MIL will go off after the vehicle is driven 3 times (driving pattern B) with no malfunction. The drive is counted only when the recorded driving pattern is met (as stored in the ECM). If another malfunction occurs while counting, the counter will reset.
- The DTC and the freeze frame data will be stored until the vehicle is driven 40 times (driving pattern A) without the same malfunction recurring (except for Misfire and Fuel Injection System). For Misfire and Fuel Injection System, the DTC and freeze frame data will be stored until the vehicle is driven 80 times (driving pattern

C) without the same malfunction recurring. The “TIME” in “SELF-DIAGNOSTIC RESULTS” mode of CONSULT-III will count the number of times the vehicle is driven.

- The 1st trip DTC is not displayed when the self-diagnosis results in OK for the 2nd trip.

SUMMARY CHART

Items	Fuel Injection System	Misfire	Other
MIL (goes off)	3 (pattern B)	3 (pattern B)	3 (pattern B)
DTC, Freeze Frame Data (no display)	80 (pattern C)	80 (pattern C)	40 (pattern A)
1st Trip DTC (clear)	1 (pattern C), *1	1 (pattern C), *1	1 (pattern B)
1st Trip Freeze Frame Data (clear)	*1, *2	*1, *2	1 (pattern B)

For details about patterns B and C under “Fuel Injection System” and “Misfire”, see "EXPLANATION FOR DRIVING PATTERNS FOR “MISFIRE <EXHAUST QUALITY DETERIORATION>”, “FUEL INJECTION SYSTEM”".

For details about patterns A and B under “Other”, see "EXPLANATION FOR DRIVING PATTERNS FOR “MISFIRE <EXHAUST QUALITY DETERIORATION>”, “FUEL INJECTION SYSTEM”".

*1: Clear timing is at the moment OK is detected.

*2: Clear timing is when the same malfunction is detected in the 2nd trip.

RELATIONSHIP BETWEEN MIL, DTC, 1ST TRIP DTC AND DRIVING PATTERNS FOR “MISFIRE <EXHAUST QUALITY DETERIORATION>”, “FUEL INJECTION SYSTEM”

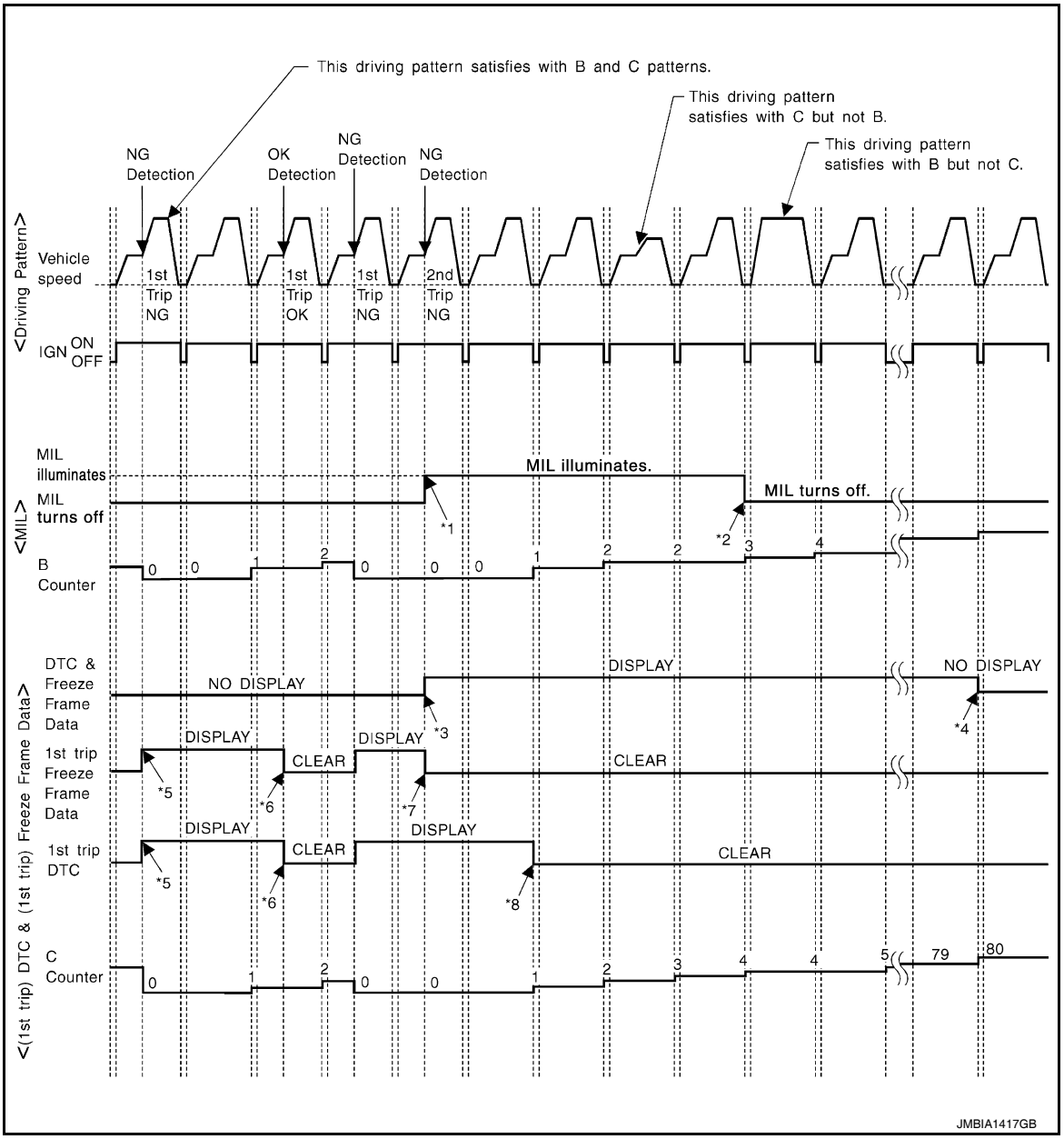

*1: When the same malfunction is detected in two consecutive trips, MIL will illuminate.

*2: MIL will turn off after vehicle is driven 3 times (pattern B) without any malfunctions.

*3: When the same malfunction is detected in two consecutive trips, the DTC and the freeze frame data will be stored in ECM.

*4: The DTC and the freeze frame data will not be displayed any longer after vehicle is driven 80 times (pattern C) without the same malfunction. (The DTC and the freeze frame data still remain in ECM.)

*5: When a malfunction is detected for the first time, the 1st trip DTC and the 1st trip freeze frame data will be stored in ECM.

*6: The 1st trip DTC and the 1st trip freeze frame data will be cleared at the moment OK is detected.

*7: When the same malfunction is detected in the 2nd trip, the 1st trip freeze frame data will be cleared.

*8: 1st trip DTC will be cleared when vehicle is driven once (pattern C) without the same malfunction after DTC is stored in ECM.

EXPLANATION FOR DRIVING PATTERNS FOR “MISFIRE <EXHAUST QUALITY DETERIORATION>”, “FUEL INJECTION SYSTEM”

<Driving Pattern B>

Driving pattern B means the vehicle operation as follows:

All components and systems should be monitored at least once by the OBD system.
- The B counter will be cleared when the malfunction is detected once regardless of the driving pattern.
- The B counter will be counted up when driving pattern B is satisfied without any malfunction.
- The MIL will go off when the B counter reaches 3. (*2 in “OBD SYSTEM OPERATION CHART”)

<Driving Pattern C>
Driving pattern C means the vehicle operation as follows:
The following conditions should be satisfied at the same time:
Engine speed: (Engine speed in the freeze frame data) ±375 rpm
Calculated load value: (Calculated load value in the freeze frame data) x (1±0.1) [%]
Engine coolant temperature (T) condition:
- When the freeze frame data shows lower than 70°C (158°F), “T” should be lower than 70°C (158°F).
- When the freeze frame data shows higher than or equal to 70°C (158°F), “T” should be higher than or equal to 70°C (158°F).

Example:
If the stored freeze frame data is as follows:
Engine speed: 850 rpm, Calculated load value: 30%, Engine coolant temperature: 80°C (176°F)
To be satisfied with driving pattern C, the vehicle should run under the following conditions:
Engine speed: 475 - 1,225 rpm, Calculated load value: 27 - 33%, Engine coolant temperature: more than 70°C (158°F)
- The C counter will be cleared when the malfunction is detected regardless of vehicle conditions above.
- The C counter will be counted up when vehicle conditions above is satisfied without the same malfunction.
- The DTC will not be displayed after C counter reaches 80.
- The 1st trip DTC will be cleared when C counter is counted once without the same malfunction after DTC is stored in ECM.

RELATIONSHIP BETWEEN MIL, DTC, 1ST TRIP DTC AND DRIVING PATTERNS EXCEPT FOR “MISFIRE <EXHAUST QUALITY DETERIORATION>”, “FUEL INJECTION SYSTEM”

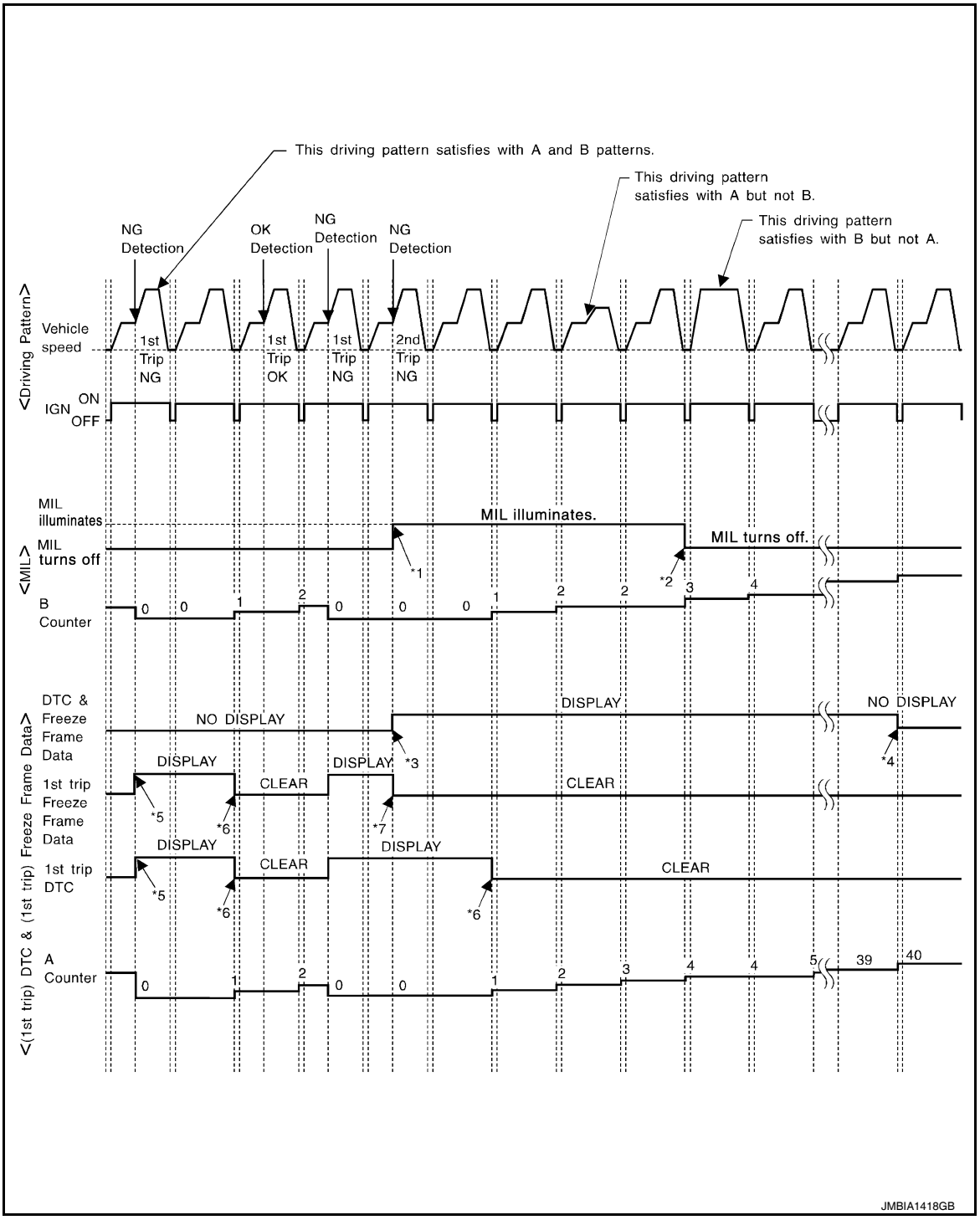

*1: When the same malfunction is detected in two consecutive trips, MIL will illuminate.

*2: MIL will turn off after vehicle is driven 3 times (pattern B) without any malfunctions.

*3: When the same malfunction is detected in two consecutive trips, the DTC and the freeze frame data will be stored in ECM.

*4: The DTC and the freeze frame data will not be displayed any longer after vehicle is driven 40 times (pattern A) without the same malfunction. (The DTC and the freeze frame data still remain in ECM.)

*5: When a malfunction is detected for the first time, the 1st trip DTC and the 1st trip freeze frame data will be stored in ECM.

*6: 1st trip DTC will be cleared after vehicle is driven once (pattern B) without the same malfunction.

*7: When the same malfunction is detected in the 2nd trip, the 1st trip freeze frame data will be cleared.

EXPLANATION FOR DRIVING PATTERNS EXCEPT FOR “MISFIRE <EXHAUST QUALITY DETERIORATION>”, “FUEL INJECTION SYSTEM”

<Driving Pattern A>

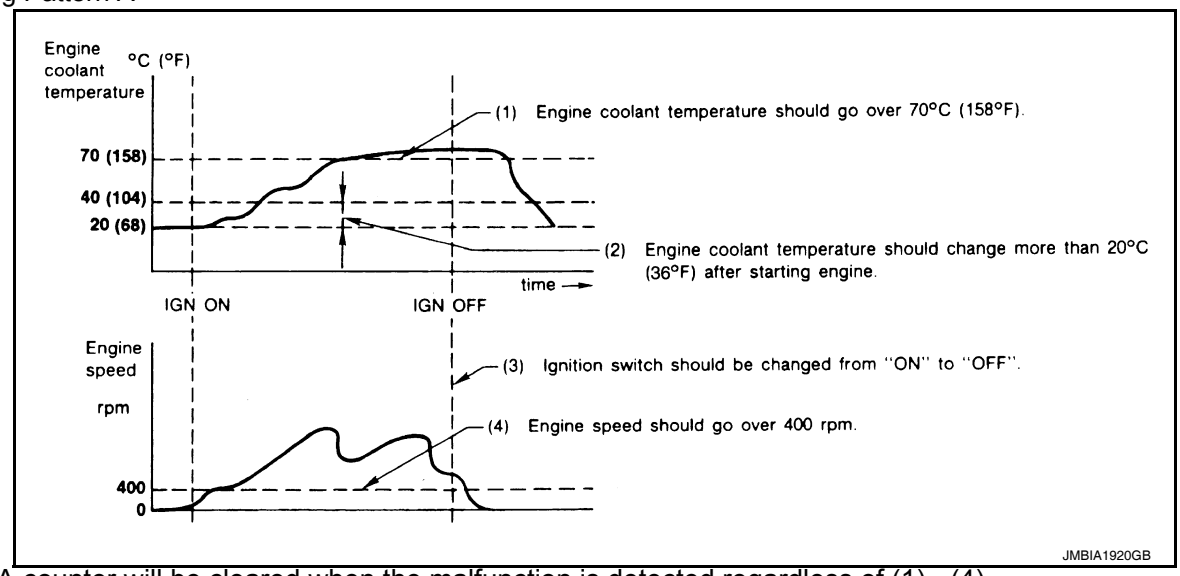

- The A counter will be cleared when the malfunction is detected regardless of (1) - (4).
- The A counter will be counted up when (1) - (4) are satisfied without the same malfunction.
- The DTC will not be displayed after the A counter reaches 40.

<Driving Pattern B>

Driving pattern B means the vehicle operation as follows:
All components and systems should be monitored at least once by the OBD system.

- The B counter will be cleared when the malfunction is detected once regardless of the driving pattern.
- The B counter will be counted up when driving pattern B is satisfied without any malfunctions.
- The MIL will go off when the B counter reaches 3 (*2 in “OBD SYSTEM OPERATION CHART”).

BASIC SERVICE PROCEDURE

Basic Inspection

INFOID:0000000005284561

1. INSPECTION START

1. Check service records for any recent repairs that may indicate a related malfunction, or a current need for scheduled maintenance.
2. Open engine hood and check the following:
- Harness connectors for improper connections
- Wiring harness for improper connections, pinches and cut
- Vacuum hoses for splits, kinks and improper connections
- Hoses and ducts for leaks
- Air cleaner clogging
- Gasket
3. Confirm that electrical or mechanical loads are not applied.
- Headlamp switch is OFF.
- Air conditioner switch is OFF.
- Rear window defogger switch is OFF.
- Steering wheel is in the straight-ahead position, etc.
4. Start engine and warm it up until engine coolant temperature indicator points the middle of gauge.
   Ensure engine stays below 1,000 rpm.

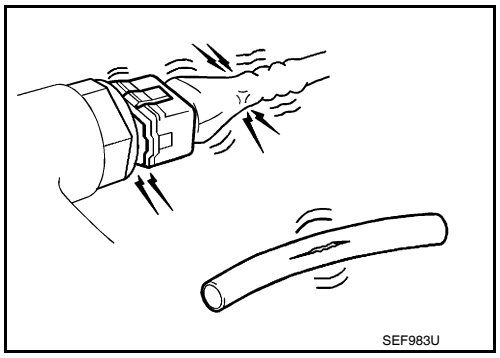

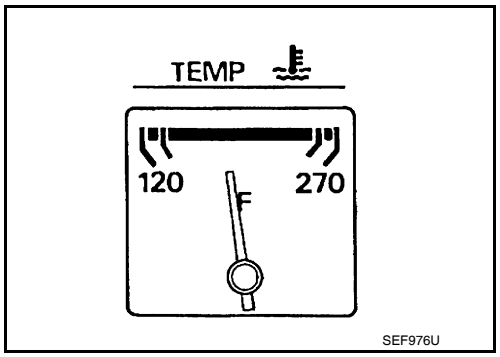

5. Run engine at about 2,000 rpm for about 2 minutes under no load.
6. Make sure that no DTC is displayed with CONSULT-III or GST.

OK or NG

OK >> GO TO 3.
NG >> GO TO 2.

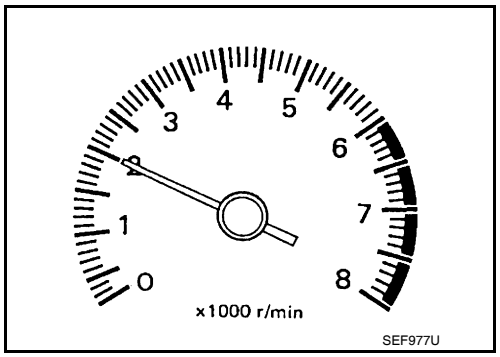

2. REPAIR OR REPLACE

Repair or replace components as necessary according to corresponding Diagnostic Procedure.

>> GO TO 3.

3. CHECK TARGET IDLE SPEED

With CONSULT-III

1. Run engine at about 2,000 rpm for about 2 minutes under no load.

2. Rev engine (2,000 to 3,000 rpm) two or three times under no load, then run engine at idle speed for about 1 minute.

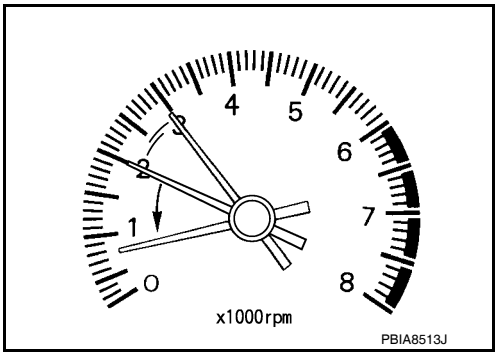

3. Read idle speed in “DATA MONITOR” mode with CONSULT-III. Refer to EC-97, "Idle Speed and Ignition Timing Check".

M/T: 675 ± 50 rpm (in Neutral position)
CVT: 700 ± 50 rpm (in P or N position)

Without CONSULT-III
1. Run engine at about 2,000 rpm for about 2 minutes under no load.
2. Rev engine (2,000 to 3,000 rpm) two or three times under no load, then run engine at idle speed for about 1 minute.
3. Check idle speed. Refer to EC-97, "Idle Speed and Ignition Timing Check".

M/T: 675 ± 50 rpm (in Neutral position)
CVT: 700 ± 50 rpm (in P or N position)

OK or NG
OK >> GO TO 10.
NG >> GO TO 4.

4. PERFORM ACCELERATOR PEDAL RELEASED POSITION LEARNING

1. Stop engine.
2. Perform EC-99, "Accelerator Pedal Released Position Learning".

>> GO TO 5.

5. PERFORM THROTTLE VALVE CLOSED POSITION LEARNING

Perform EC-99, "Throttle Valve Closed Position Learning".

>> GO TO 6.

6. PERFORM IDLE AIR VOLUME LEARNING

Refer to EC-99, "Idle Air Volume Learning".
Is Idle Air Volume Learning carried out successfully?

Yes or No
Yes >> GO TO 7.
No >> 1. Follow the instruction of Idle Air Volume Learning.
2. GO TO 4.

7. CHECK TARGET IDLE SPEED AGAIN

With CONSULT-III
1. Start engine and warm it up to normal operating temperature.
2. Read idle speed in “DATA MONITOR” mode with CONSULT-III. Refer to EC-97, "Idle Speed and Ignition Timing Check".

M/T: 675 ± 50 rpm (in Neutral position)
CVT: 700 ± 50 rpm (in P or N position)

Without CONSULT-III
1. Start engine and warm it up to normal operating temperature.
2. Check idle speed. Refer to EC-97, "Idle Speed and Ignition Timing Check".

M/T: 675 ± 50 rpm (in Neutral position)
CVT: 700 ± 50 rpm (in P or N position)

OK or NG
OK >> GO TO 10.
NG >> GO TO 8.

8. DETECT MALFUNCTIONING PART

Check the following.
- Check crankshaft position sensor (POS) and circuit.
  Refer to EC-317.
- Check camshaft position sensor (PHASE) and circuit.
  Refer to EC-324.

OK or NG
OK >> GO TO 9.
NG >> 1. Repair or replace.
2. GO TO 4.

9. CHECK ECM FUNCTION

1. Substitute another known-good ECM to check ECM function. (ECM may be the cause of an incident, but this is a rare case.)
2. Perform initialization of NVIS (NATS) system and registration of all NVIS (NATS) ignition key IDs.
   Refer to BL-171, "ECM Re-communicating Function".

>> GO TO 4.

10. CHECK IGNITION TIMING

1. Run engine at idle.
2. Check ignition timing with a timing light.
   Refer to EC-97, "Idle Speed and Ignition Timing Check".

- Timing indicator (1)

M/T: 6 ± 5° BTDC (in Neutral position)
CVT: 6 ± 5° BTDC (in P or N position)

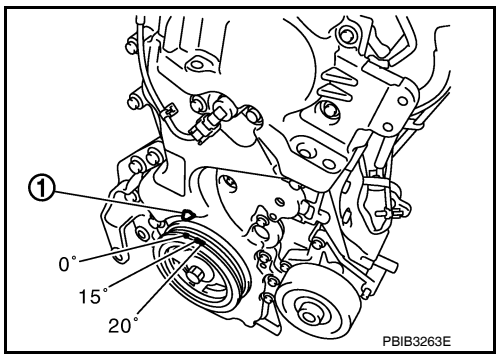

OK or NG
OK >> GO TO 19.
NG >> GO TO 11.

11. PERFORM ACCELERATOR PEDAL RELEASED POSITION LEARNING

1. Stop engine.
2. Perform EC-99, "Accelerator Pedal Released Position Learning".

>> GO TO 12.

12. PERFORM THROTTLE VALVE CLOSED POSITION LEARNING

Perform EC-99, "Throttle Valve Closed Position Learning".

>> GO TO 13.

13. PERFORM IDLE AIR VOLUME LEARNING

Refer to EC-99, "Idle Air Volume Learning".

Is Idle Air Volume Learning carried out successfully?

Yes or No

Yes >> GO TO 14.
No >> 1. Follow the instruction of Idle Air Volume Learning.
2. GO TO 4.

14. CHECK TARGET IDLE SPEED AGAIN

With CONSULT-III

1. Start engine and warm it up to normal operating temperature.
2. Read idle speed in “DATA MONITOR” mode with CONSULT-III. Refer to EC-97, "Idle Speed and Ignition Timing Check".

M/T: 675 ± 50 rpm (in Neutral position)
CVT: 700 ± 50 rpm (in P or N position)

Without CONSULT-III

1. Start engine and warm it up to normal operating temperature.
2. Check idle speed. Refer to EC-97, "Idle Speed and Ignition Timing Check".

M/T: 675 ± 50 rpm (in Neutral position)
CVT: 700 ± 50 rpm (in P or N position)

OK or NG

OK >> GO TO 15.
NG >> GO TO 17.

15. CHECK IGNITION TIMING AGAIN

1. Run engine at idle.
2. Check ignition timing with a timing light.
Refer to EC-97, "Idle Speed and Ignition Timing Check".

- Timing indicator (1)

M/T: 6 ± 5° BTDC (in Neutral position)
CVT: 6 ± 5° BTDC (in P or N position)

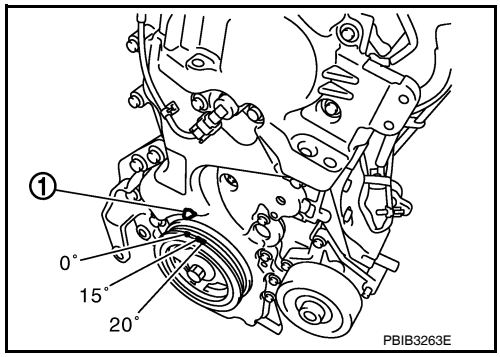

OK or NG

OK >> GO TO 19
NG >> GO TO 16.

16. CHECK TIMING CHAIN INSTALLATION

Check timing chain installation. Refer to EM-40.

OK or NG

OK >> GO TO 17.
NG >> 1. Repair the timing chain installation.
2. GO TO 4.

17. DETECT MALFUNCTIONING PART

Check the following.

- Check crankshaft position sensor (POS) and circuit.
Refer to EC-317.
- Check camshaft position sensor (PHASE) and circuit.
Refer to EC-324.

OK or NG

OK >> GO TO 18.
NG >> 1. Repair or replace.

2. GO TO 4.

18. CHECK ECM FUNCTION

1. Substitute another known-good ECM to check ECM function. (ECM may be the cause of an incident, but this is a rare case.)
2. Perform initialization of NVIS (NATS) system and registration of all NVIS (NATS) ignition key IDs. Refer to BL-171, "ECM Re-communicating Function".

>> GO TO 4.

19. INSPECTION END

Did you replace ECM, referring this Basic Inspection procedure?

Yes or No

Yes >> 1. Perform EC-99, "VIN Registration".
2. **INSPECTION END**

No >> **INSPECTION END**

Idle Speed and Ignition Timing Check

INFOID:0000000005284562

IDLE SPEED

WITH CONSULT-III

Check idle speed in “DATA MONITOR” mode with CONSULT-III.

WITH GST

Check idle speed in Service $01 with GST.

IGNITION TIMING

Any of following two methods may be used.

Method A

1. Attach timing light to loop wire (1) as shown.
   - ⇦ : Vehicle front

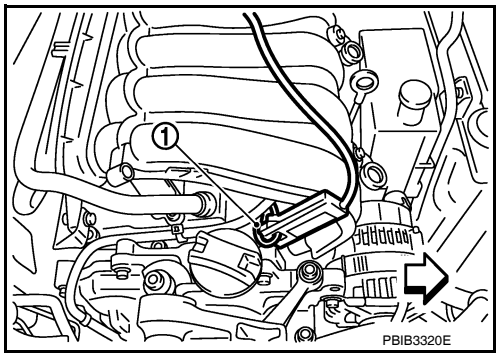

2. Check ignition timing.
   - Timing indicator (1)

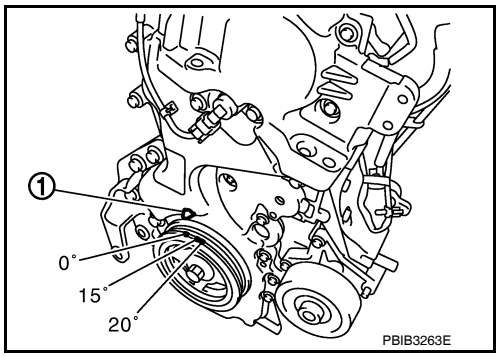

Method B

1. Remove No. 4 ignition coil (1).

- ⇦ : Vehicle front

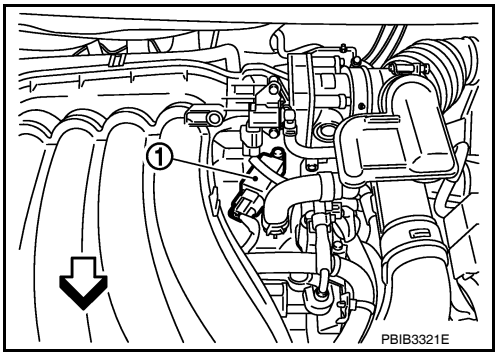

2. Connect No. 4 ignition coil (1) and No. 4 spark plug with suitable high-tension wire (A) as shown, and attach timing light clamp (B) to this wire.
   - ⇦ : Vehicle front

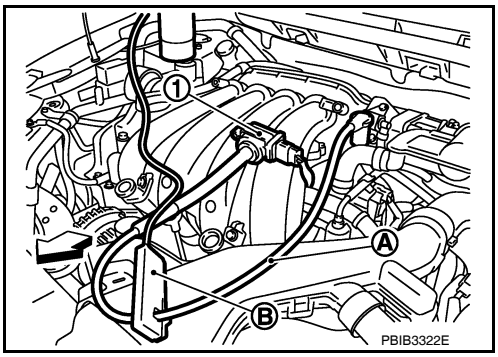

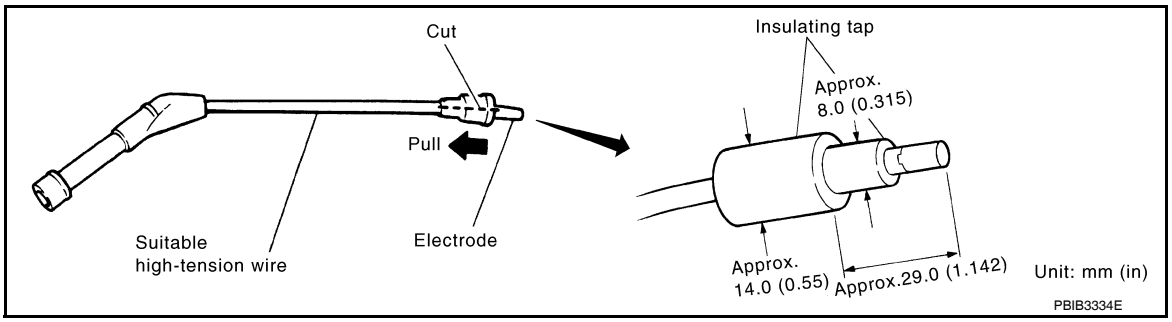

3. Check ignition timing.
   - Timing indicator (1)

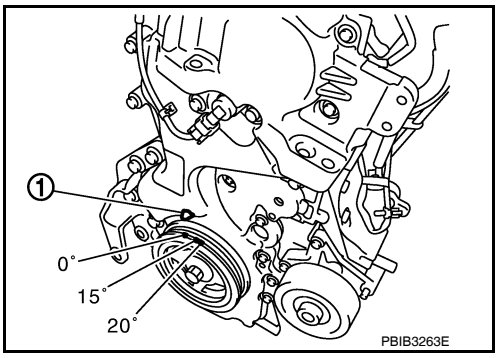

Procedure After Replacing ECM

INFOID:0000000005284563

When replacing ECM, the following procedure must be performed.

1. Perform initialization of NVIS (NATS) system and registration of all NVIS (NATS) ignition key IDs. Refer to BL-171, "ECM Re-communicating Function".
2. Perform EC-99, "VIN Registration".
3. Perform EC-99, "Accelerator Pedal Released Position Learning".
4. Perform EC-99, "Throttle Valve Closed Position Learning".

5. Perform EC-99, "Idle Air Volume Learning".

VIN Registration

INFOID:0000000005284564

DESCRIPTION

VIN Registration is an operation to registering VIN in ECM. It must be performed each time ECM is replaced.

NOTE:

Accurate VIN which is registered in ECM may be required for Inspection & Maintenance (I/M).

OPERATION PROCEDURE

WITH CONSULT-III

1. Check the VIN of the vehicle and note it. Refer to GI-45.
2. Turn ignition switch ON and engine stopped.
3. Select “VIN REGISTRATION” in “WORK SUPPORT” mode.
4. Follow the instruction of CONSULT-III display.

Accelerator Pedal Released Position Learning

INFOID:0000000005284565

DESCRIPTION

Accelerator Pedal Released Position Learning is an operation to learn the fully released position of the accelerator pedal by monitoring the accelerator pedal position sensor output signal. It must be performed each time harness connector of accelerator pedal position sensor or ECM is disconnected.

OPERATION PROCEDURE

1. Make sure that accelerator pedal is fully released.
2. Turn ignition switch ON and wait at least 2 seconds.
3. Turn ignition switch OFF and wait at least 10 seconds.
4. Turn ignition switch ON and wait at least 2 seconds.
5. Turn ignition switch OFF and wait at least 10 seconds.

Throttle Valve Closed Position Learning

INFOID:0000000005284566

DESCRIPTION

Throttle Valve Closed Position Learning is an operation to learn the fully closed position of the throttle valve by monitoring the throttle position sensor output signal. It must be performed each time harness connector of electric throttle control actuator or ECM is disconnected.

OPERATION PROCEDURE

1. Make sure that accelerator pedal is fully released.
2. Turn ignition switch ON.
3. Turn ignition switch OFF and wait at least 10 seconds.
   Make sure that throttle valve moves during above 10 seconds by confirming the operating sound.

Idle Air Volume Learning

INFOID:0000000005284567

DESCRIPTION

Idle Air Volume Learning is an operation to learn the idle air volume that keeps each engine within the specific range. It must be performed under any of the following conditions:

- Each time electric throttle control actuator or ECM is replaced.
- Idle speed or ignition timing is out of specification.

PREPARATION

Before performing Idle Air Volume Learning, make sure that all of the following conditions are satisfied.
Learning will be cancelled if any of the following conditions are missed for even a moment.

- Battery voltage: More than 12.9 V (At idle)
- Engine coolant temperature: 70 - 95°C (158 - 203°F)
- Park/neutral position (PNP) switch (M/T): ON
  Selector lever (CVT): P or N

- Electric load switch: OFF
  [Air conditioner, headlamp rear window defogger]
  On vehicles equipped with daytime light systems, if the parking brake is applied before the engine is started the headlamp will not be illuminated.
- Steering wheel: Neutral (Straight-ahead position)
- Vehicle speed: Stopped
- Transmission: Warmed-up
- For CVT models
- With CONSULT-III: Drive vehicle until “ATF TEMP SEN” in “DATA MONITOR” mode of “TRANSMISSION” system indicates less than 0.9 V.
- Without CONSULT-III: Drive vehicle for 10 minutes.
- For M/T models
- Drive vehicle for 10 minutes.

OPERATION PROCEDURE

WITH CONSULT-III

1. Perform EC-99, "Accelerator Pedal Released Position Learning".
2. Perform EC-99, "Throttle Valve Closed Position Learning".
3. Start engine and warm it up to normal operating temperature.
4. Check that all items listed under the topic PREPARATION (previously mentioned) are in good order.
5. Select “IDLE AIR VOL LEARN” in “WORK SUPPORT” mode.
6. Touch “START” and wait 20 seconds.
7. Make sure that “CMPLT” is displayed on CONSULT-III screen. If “CMPLT” is not displayed, Idle Air Volume Learning will not be carried out successfully. In this case, find the cause of the incident by referring to the DIAGNOSTIC PROCEDURE below.
8. Rev up the engine two or three times and make sure that idle speed and ignition timing are within the specifications.
   Refer to EC-93, "Basic Inspection".

Item	Specification
Idle speed	M/T: 675 ± 50 rpm (in Neutral position) CVT: 700 ± 50 rpm (in P or N position)
Ignition timing	M/T: 6 ± 5° BTDC (in Neutral position) CVT: 6 ± 5° BTDC (in P or N position)

WITHOUT CONSULT-III

NOTE:
- **It is better to count the time accurately with a clock.**
- **It is impossible to switch the diagnostic mode when an accelerator pedal position sensor circuit has a malfunction.**

1. Perform EC-99, "Accelerator Pedal Released Position Learning".
2. Perform EC-99, "Throttle Valve Closed Position Learning".
3. Start engine and warm it up to normal operating temperature.
4. Check that all items listed under the topic PREPARATION (previously mentioned) are in good order.
5. Turn ignition switch OFF and wait at least 10 seconds.
6. Confirm that accelerator pedal is fully released, turn ignition switch ON and wait 3 seconds.
7. Repeat the following procedure quickly five times within 5 seconds.

a. Fully depress the accelerator pedal.
b. Fully release the accelerator pedal.

8. Wait 7 seconds, fully depress the accelerator pedal and keep it for approx. 20 seconds until the MIL stops blinking and turned ON.
9. Fully release the accelerator pedal within 3 seconds after the MIL turned ON.
10. Start engine and let it idle.

11. Wait 20 seconds.

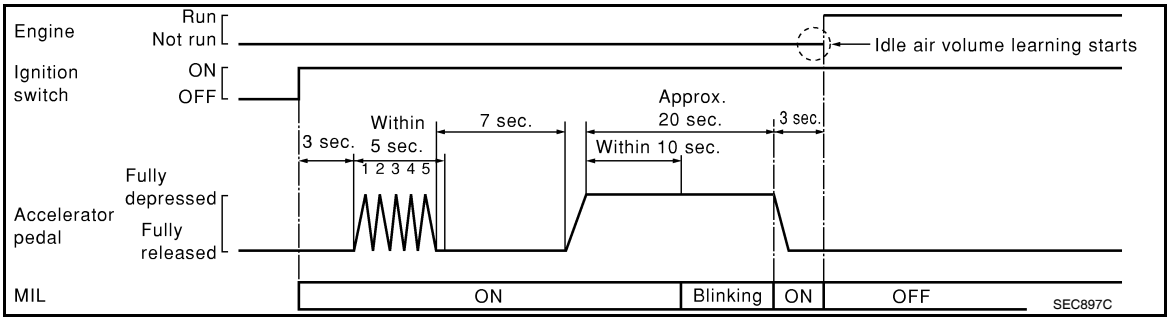

12. Rev up the engine two or three times and make sure that idle speed and ignition timing are within the specifications. Refer to EC-93, "Basic Inspection".

Item	Specification
Idle speed	M/T: 675 ± 50 rpm (in Neutral position) CVT: 700 ± 50 rpm (in P or N position)
Ignition timing	M/T: 6 ± 5° BTDC (in Neutral position) CVT: 6 ± 5° BTDC (in P or N position)

13. If idle speed and ignition timing are not within the specification, Idle Air Volume Learning will not be carried out successfully. In this case, find the cause of the incident by referring to the DIAGNOSTIC PROCEDURE below.

DIAGNOSTIC PROCEDURE

If idle air volume learning cannot be performed successfully, proceed as follows:

1. **Check that throttle valve is fully closed.**
2. **Check PCV valve operation.**
3. **Check that downstream of throttle valve is free from air leakage.**
4. **When the above three items check out OK, engine component parts and their installation condition are questionable. Check and eliminate the cause of the incident.**
   It is useful to perform EC-144.
5. **If any of the following conditions occur after the engine has started, eliminate the cause of the incident and perform Idle air volume learning all over again:**

- **Engine stalls.**
- **Erroneous idle.**

Fuel Pressure Check

INFOID:0000000005284568

FUEL PRESSURE RELEASE

WITH CONSULT-III

1. Turn ignition switch ON.
2. Perform “FUEL PRESSURE RELEASE” in “WORK SUPPORT” mode with CONSULT-III.
3. Start engine.
4. After engine stalls, crank it two or three times to release all fuel pressure.
5. Turn ignition switch OFF.

WITHOUT CONSULT-III

1. Remove fuel pump fuse (1) located in IPDM E/R (2).
   - ⇦: Vehicle front
2. Start engine.
3. After engine stalls, crank it two or three times to release all fuel pressure.
4. Turn ignition switch OFF.
5. Reinstall fuel pump fuse after servicing fuel system.

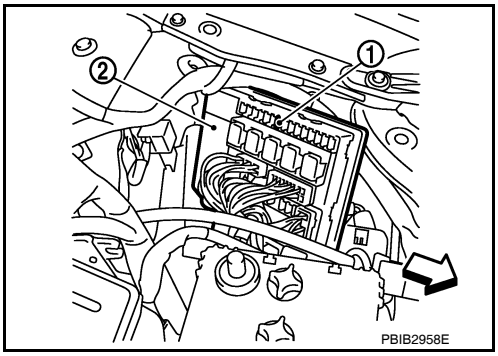

FUEL PRESSURE CHECK

CAUTION:

Before disconnecting fuel line, release fuel pressure from fuel line to eliminate danger.

NOTE:

- **Prepare pans or saucers under the disconnected fuel line because the fuel may spill out. The fuel pressure cannot be completely released because B16 models do not have fuel return system.**
- **The fuel hose connection method used when taking fuel pressure check must not be used for other purposes.**
- **Be careful not to scratch or put debris around connection area when servicing, so that the quick connector maintains seal ability with O-rings inside.**
- **Do not perform fuel pressure check with electrical systems operating (i.e. lights, rear defogger, A/C, etc.) Fuel pressure gauge may indicate false readings due to varying engine load and changes in manifold vacuum.**

1. Release fuel pressure to zero. Refer to "FUEL PRESSURE RELEASE".
2. Prepare fuel hose for fuel pressure check B and fuel tube adapter (KV10118400) D, then connect fuel pressure gauge A.
   - ⇦: To quick connector
   - ⬅: To fuel tube (engine side)
   - C: Clamp
   - Use suitable fuel hose for fuel pressure check (genuine NISSAN fuel hose without quick connector).
   - To avoid unnecessary force or tension to hose, use moderately long fuel hose for fuel pressure check.
   - Do not use the fuel hose for checking fuel pressure with damage or cracks on it.
   - Use pressure gauge to check fuel pressure.

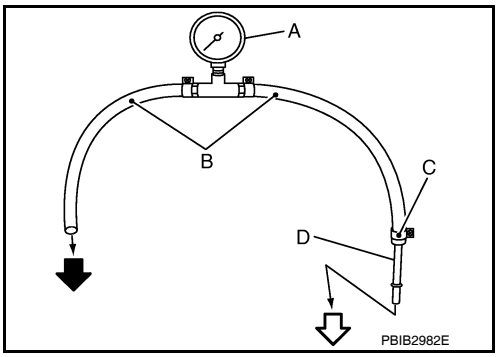

3. Remove fuel hose. Refer to EM-18.
   - Do not twist or kink fuel hose because it is plastic hose.
4. Connect fuel hose for fuel pressure check (1) to fuel tube (engine side) with clamp (2) as shown in the figure.
   - No.2 spool (5)
   - Wipe off oil or dirt from hose insertion part using cloth moistened with gasoline.
   - Apply proper amount of gasoline between top of the fuel tube (3) and No.1 spool (4).
   - Insert fuel hose for fuel pressure check until it touches the No.1 spool on fuel tube.
   - Use NISSAN genuine hose clamp (part number: 16439 N4710 or 16439 40U00).
   - When reconnecting fuel line, always use new clamps.
   - Use a torque driver to tighten clamps.
   - Install hose clamp to the position within 1 - 2 mm (0.04 - 0.08 in).

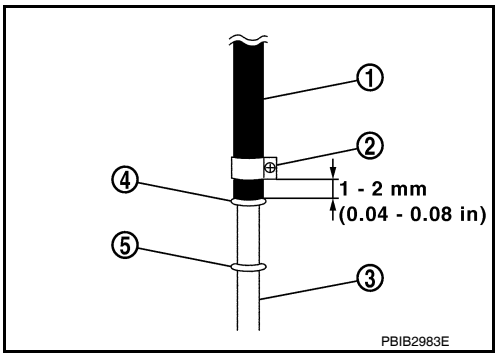

Tightening torque: 1 - 1.5 N·m (0.1 - 0.15 kg-m, 9 - 13 in-lb)

   - Make sure that clamp screw does not contact adjacent parts.

5. Connect fuel tube adapter to quick connector.
   - A: Fuel pressure gauge
   - B: Fuel hose for fuel pressure check
6. After connecting fuel hose for fuel pressure check, pull the hose with a force of approximately 98 N (10 kg, 22 lb) to confirm fuel tube does not come off.
7. Turn ignition switch ON and check for fuel leakage.
8. Start engine and check for fuel leakage.
9. Read the indication of fuel pressure gauge.
   - Do not perform fuel pressure check with system operating. Fuel pressure gauge may indicate false readings.
   - During fuel pressure check, confirm for fuel leakage from fuel connection every 3 minutes.

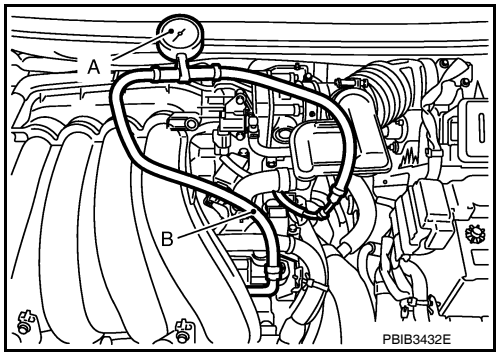

At idling: Approximately 350 kPa (3.57 kg/cm^2, 51 psi)

10. If result is unsatisfactory, go to next step.
11. Check the following.
    - Fuel hoses and fuel tubes for clogging
    - Fuel filter for clogging
    - Fuel pump
    - Fuel pressure regulator for clogging

    If OK, replace fuel pressure regulator.
    If NG, repair or replace.
12. Check the following.
    - Fuel hoses and fuel tubes for clogging
    - Fuel filter for clogging
    - Fuel pump
    - Fuel pressure regulator for clogging

    If OK, replace fuel pressure regulator.
    If NG, repair or replace.
13. Before disconnecting fuel pressure gauge and fuel pressure adapter J-44321-6, release fuel pressure to zero. Refer to "FUEL PRESSURE RELEASE".

TROUBLE DIAGNOSIS

Trouble Diagnosis Introduction

INFOID:0000000005284569

INTRODUCTION

The engine has an ECM to control major systems such as fuel control, ignition control, idle air control system, etc. The ECM accepts input signals from sensors and instantly drives actuators. It is essential that both input and output signals are proper and stable. At the same time, it is important that there are no malfunctions such as vacuum leaks, fouled spark plugs, or other malfunctions with the engine.

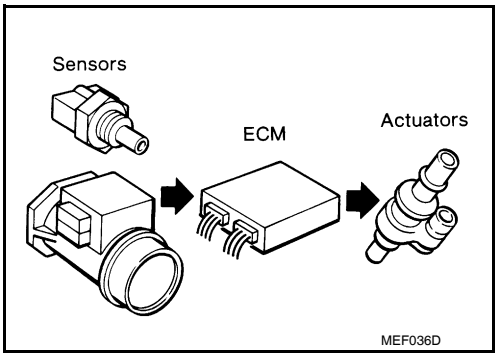

It is much more difficult to diagnose an incident that occurs intermittently rather than continuously. Most intermittent incidents are caused by poor electric connections or improper wiring. In this case, careful checking of suspected circuits may help prevent the replacement of good parts.

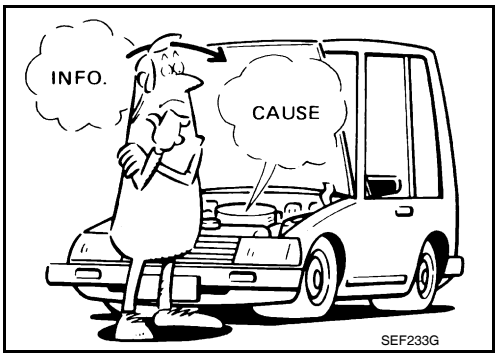

A visual check only may not find the cause of the incidents. A road test with CONSULT-III (or GST) or a circuit tester connected should be performed. Follow the Work Flow on "WORK FLOW".
Before undertaking actual checks, take a few minutes to talk with a customer who approaches with a drivability complaint. The customer can supply good information about such incidents, especially intermittent ones. Find out what symptoms are present and under what conditions they occur. A Diagnostic Worksheet like the example on "Worksheet Sample" should be used.
Start your diagnosis by looking for conventional malfunctions first. This will help troubleshoot drivability malfunctions on an electronically controlled engine vehicle.

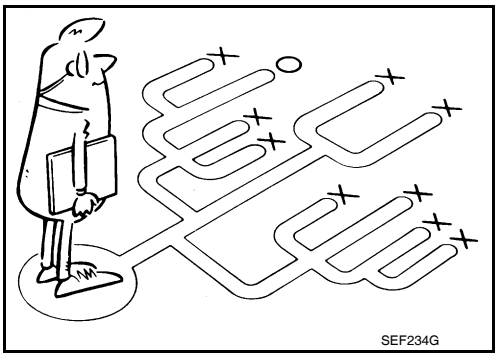

WORK FLOW

Overall Sequence

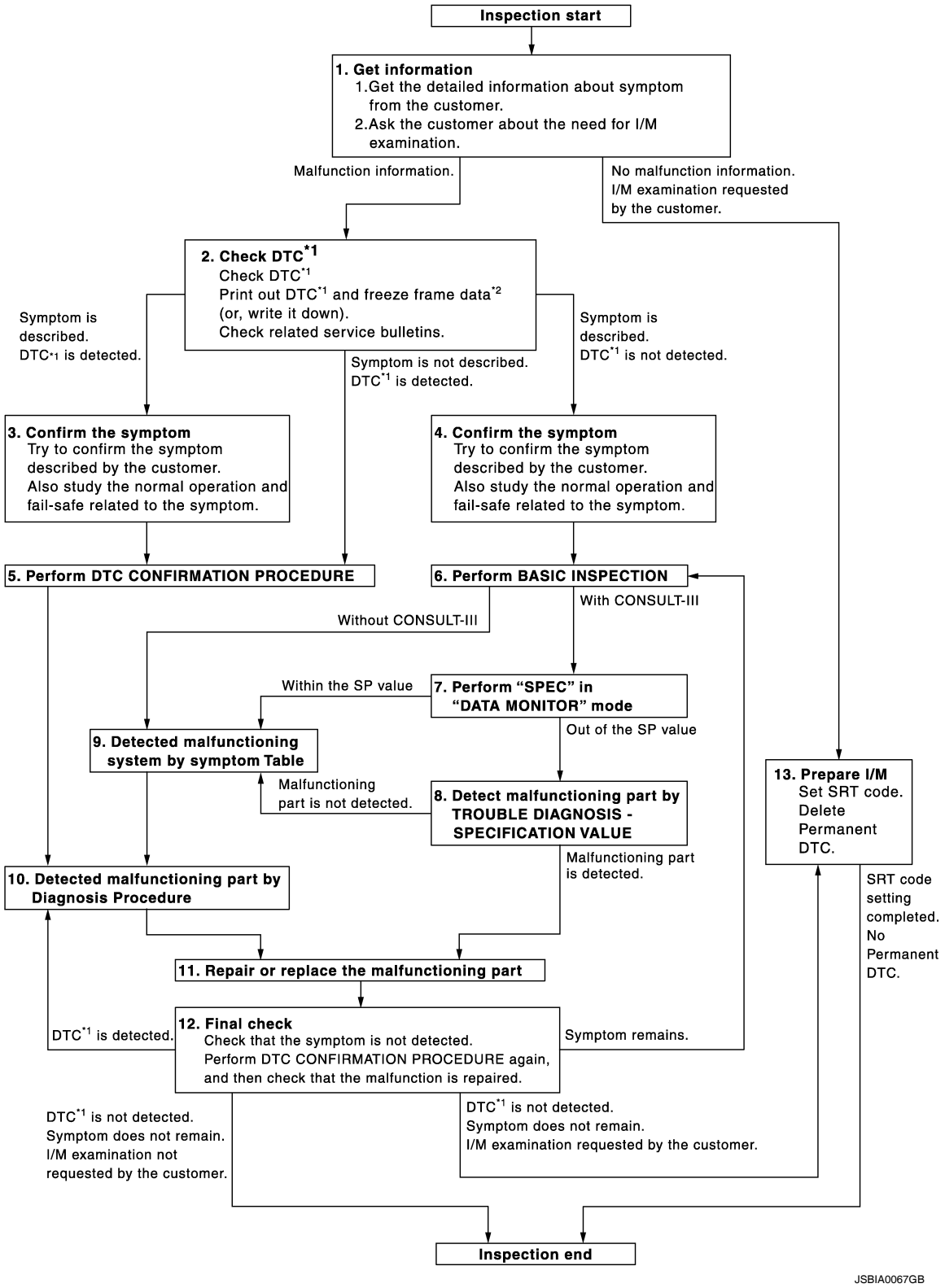

*1: Include 1st trip DTC.

*2: Include 1st trip freeze frame data.

Detailed Flow

1.GET INFORMATION FOR SYMPTOM

1. Get the detailed information from the customer about the symptom (the condition and the environment when the incident/malfunction occurred) using the “Diagnostic Work Sheet”.
2. Ask if the customer requests I/M examination.

Malfunction information, obtained>>GO TO 2.
No malfunction information, but a request for I/M examination>>GO TO 13.

2.CHECK DTC

1. Check DTC.
2. Perform the following procedure if DTC is displayed.
- Record DTC and freeze frame data. (Print them out with CONSULT-III or GST.)
- Erase DTC. (Refer to EC-62, "Emission-related Diagnostic Information".)
- Study the relationship between the cause detected by DTC and the symptom described by the customer. (Symptom Table is useful. Refer to EC-111, "Symptom Matrix Chart".)
3. Check related service bulletins for information.

Are any symptoms described and any DTCs detected?

Symptom is described, DTC is detected>>GO TO 3.
Symptom is described, DTC is not detected>>GO TO 4.
Symptom is not described, DTC is detected>>GO TO 5.

3.CONFIRM THE SYMPTOM

Try to confirm the symptom described by the customer (except MIL ON).
Also study the normal operation and fail-safe related to the symptom.
Diagnosis Work Sheet is useful to verify the incident.
Verify relation between the symptom and the condition when the symptom is detected.

>> GO TO 5.

4.CONFIRM THE SYMPTOM

Try to confirm the symptom described by the customer.
Also study the normal operation and fail-safe related to the symptom.
Diagnosis Work Sheet is useful to verify the incident.
Verify relation between the symptom and the condition when the symptom is detected.

>> GO TO 6.

5.PERFORM DTC CONFIRMATION PROCEDURE

Perform DTC CONFIRMATION PROCEDURE for the displayed DTC, and then make sure that DTC is detected again.
If two or more DTCs are detected, refer to EC-109, "DTC Inspection Priority Chart" and determine trouble diagnosis order.

NOTE:
- Freeze frame data is useful if the DTC is not detected.
- Perform Component Function Check if DTC CONFIRMATION PROCEDURE is not included on Service Manual. This simplified check procedure is an effective alternative though DTC cannot be detected during this check.
  If the result of Component Function Check is NG, it is the same as the detection of DTC by DTC CONFIRMATION PROCEDURE.

Is DTC detected?

YES >> GO TO 10.
NO >> Check according to EC-152, "Description".

6.PERFORM BASIC INSPECTION

Perform EC-93, "Basic Inspection".

Do you have CONSULT-III?

YES >> GO TO 7.
NO >> GO TO 9.

7. PERFORM SPEC IN DATA MONITOR MODE

With CONSULT-III
Make sure that “MAS A/F SE-B1”, “MAS A/F SE-B2”, “B/FUEL SCHDL”, “A/F ALPHA-B1”, and “A/F ALPHA-B2” are within the SP value using CONSULT-III “SPEC” in “DATA MONITOR” mode. Refer to EC-144, "Inspection Procedure".

Is the measurement value within the SP value?

YES >> GO TO 9.
NO >> GO TO 8.

8. DETECT MALFUNCTIONING PART BY TROUBLE DIAGNOSIS - SPECIFICATION VALUE

Detect malfunctioning part according to EC-144, "Diagnosis Procedure".

Is a malfunctioning part detected?

YES >> GO TO 11.
NO >> GO TO 9.

9. DETECT MALFUNCTIONING SYSTEM BY SYMPTOM TABLE

Detect malfunctioning system according to EC-111, "Symptom Matrix Chart" based on the confirmed symptom in step 4, and determine the trouble diagnosis order based on possible causes and symptoms.

>> GO TO 10.

10. DETECT MALFUNCTIONING PART BY DIAGNOSIS PROCEDURE

Inspect according to Diagnosis Procedure of the system.
NOTE:
The Diagnosis Procedure in EC section described based on open circuit inspection. A short circuit inspection is also required for the circuit check in the Diagnosis Procedure. For details, refer to GI-26, "How to Perform Efficient Diagnosis for an Electrical Incident".

Is a malfunctioning part detected?

YES >> GO TO 11.
NO >> Monitor input data from related sensors or check voltage of related ECM terminals using CONSULT-III. Refer to EC-124, "ECM Terminal and Reference Value", EC-140, "CONSULT-III Reference Value in Data Monitor".

11. REPAIR OR REPLACE THE MALFUNCTIONING PART

1. Repair or replace the malfunctioning part.
2. Reconnect parts or connectors disconnected during Diagnosis Procedure again after repair and replacement.
3. Check DTC. If DTC is displayed, erase it. Refer to EC-62, "Emission-related Diagnostic Information".

>> GO TO 12.

12. FINAL CHECK

When DTC was detected in step 2, perform DTC CONFIRMATION PROCEDURE or Component Function Check again, and then make sure that the malfunction have been completely repaired.
When symptom was described from the customer, refer to confirmed symptom in step 3 or 4, and make sure that the symptom is not detected.

Is DTC detected and does symptom remain?

YES-1 >> DTC is detected: GO TO 10.
YES-2 >> Symptom remains: GO TO 6.
NO-1 >> No request for I/M examination from the customer: Before returning the vehicle to the customer, always erase unnecessary DTC in ECM and TCM (Transmission Control Module). Refer to EC-62, "Emission-related Diagnostic Information".
NO-2 >> I/M examination, requested from the customer: GO TO 13.

13. PREPARE FOR I/M EXAMINATION

1. Set SRT codes. Refer to EC-62, "Emission-related Diagnostic Information".
2. Erase permanent DTCs. Refer to EC-62, "Emission-related Diagnostic Information".

>> INSPECTION END

DIAGNOSTIC WORKSHEET

Description

There are many operating conditions that lead to the malfunction of engine components. A good grasp of such conditions can make troubleshooting faster and more accurate.

In general, each customer feels differently about an incident. It is important to fully understand the symptoms or conditions for a customer complaint.

Utilize a diagnostic worksheet as shown in the following "Worksheet Sample" in order to organize all the information for troubleshooting.

Some conditions may cause the MIL to come on steady or blink and DTC to be detected. Examples:

- Vehicle ran out of fuel, which caused the engine to misfire.
- Fuel filler cap was left off or incorrectly screwed on, allowing fuel to evaporate into the atmosphere.

KEY POINTS

WHAT ..... Vehicle & engine model
WHEN ..... Date, Frequencies
WHERE..... Road conditions
HOW ..... Operating conditions, Weather conditions, Symptoms

SEF907L

Worksheet Sample

Customer name MR/MS		Model & Year	VIN
Engine #		Trans.	Mileage
Incident Date		Manuf. Date	In Service Date
Fuel and fuel filler cap		☐ Vehicle ran out of fuel causing misfire ☐ Fuel filler cap was left off or incorrectly screwed on.	
Symptoms	☐ Startability	☐ Impossible to start ☐ No combustion ☐ Partial combustion ☐ Partial combustion affected by throttle position ☐ Partial combustion NOT affected by throttle position ☐ Possible but hard to start ☐ Others [ ]	
	☐ Idling	☐ No fast idle ☐ Unstable ☐ High idle ☐ Low idle ☐ Others [ ]	
	☐ Driveability	☐ Stumble ☐ Surge ☐ Knock ☐ Lack of power ☐ Intake backfire ☐ Exhaust backfire ☐ Others [ ]	
	☐ Engine stall	☐ At the time of start ☐ While idling ☐ While accelerating ☐ While decelerating ☐ Just after stopping ☐ While loading	
Incident occurrence		☐ Just after delivery ☐ Recently ☐ In the morning ☐ At night ☐ In the daytime	
Frequency		☐ All the time ☐ Under certain conditions ☐ Sometimes	
Weather conditions		☐ Not affected	
	Weather	☐ Fine ☐ Raining ☐ Snowing ☐ Others [ ]	
	Temperature	☐ Hot ☐ Warm ☐ Cool ☐ Cold ☐ Humid °F	
Engine conditions		☐ Cold ☐ During warm-up ☐ After warm-up Engine speed 0 2,000 4,000 6,000 8,000 rpm	
Road conditions		☐ In town ☐ In suburbs ☐ Highway ☐ Off road (up/down)	
Driving conditions		☐ Not affected ☐ At starting ☐ While idling ☐ At racing ☐ While accelerating ☐ While cruising ☐ While decelerating ☐ While turning (RH/LH) Vehicle speed 0 10 20 30 40 50 60 MPH	
Malfunction indicator lamp		☐ Turned on ☐ Not turned on	

MTBL0017

DTC Inspection Priority Chart

INFOID:0000000005284570

If some DTCs are displayed at the same time, perform inspections one by one based on the following priority chart.

Priority	Detected items (DTC)
1	• U0101 U0140 U1001 CAN communication line • P0101 P0102 P0103 Mass air flow sensor • P0112 P0113 P0127 Intake air temperature sensor • P0116 P0117 P0118 P0125 Engine coolant temperature sensor • P0122 P0123 P0222 P0223 P1225 P1226 P2135 Throttle position sensor • P0128 Thermostat function • P0181 P0182 P0183 Fuel tank temperature sensor • P0196 P0197 P0198 Engine oil temperature sensor • P0327 P0328 Knock sensor • P0335 Crankshaft position sensor (POS) • P0340 Camshaft position sensor (PHASE) • P0460 P0461 P0462 P0463 Fuel level sensor • P0500 Vehicle speed sensor • P0605 P0607ECM • P0643 Sensor power supply • P0705 Transmission range switch • P0850 Park/neutral position (PNP) switch • P1610 - P1615 NATS • P2122 P2123 P2127 P2128 P2138 Accelerator pedal position sensor
2	• P0031 P0032 Air fuel ratio (A/F) sensor 1 heater • P0037 P0038 Heated oxygen sensor 2 heater • P0075 Intake valve timing control solenoid valve • P0130 P0131 P0132 P0133 P2A00 Air fuel ratio (A/F) sensor 1 • P0137 P0138 P0139 Heated oxygen sensor 2 • P0441 EVAP control system purge flow monitoring • P0443 P0444 P0445 EVAP canister purge volume control solenoid valve • P0447 P0448 EVAP canister vent control valve • P0451 P0452 P0453 EVAP control system pressure sensor • P0603 ECM power supply • P1217 Engine over temperature (OVERHEAT) • P1805 Brake switch • P2004 Tumble control valve motor • P2014 Tumble control valve position sensor • P2100 P2103 Throttle control motor relay • P2101 Electric throttle control function • P2118 Throttle control motor
3	• P0011 Intake valve timing control • P0171 P0172 Fuel injection system function • P0300 - P0304 Misfire • P0420 Three way catalyst function • P0442 P0456 EVAP control system (SMALL LEAK, VERY SMALL LEAK) • P0455 EVAP control system (GROSS LEAK) • P0506 P0507 Idle speed control system • P0710 P0715 P0720 P0740 P0744 P0745 P0746 P0776 P0778 P0840 P0845 P1740 P1777 P1778 CVT related sensors, solenoid valves and switches • P1148 Closed loop control • P1212 TCS communication line • P1421 Cold start control • P1564 ASCD steering switch • P1572 ASCD brake switch • P1574 ASCD vehicle speed sensor • P1715 Input speed sensor • P2119 Electric throttle control actuator

Fail-Safe Chart

INFOID:0000000005284571

When the DTC listed below is detected, the ECM enters fail-safe mode and the MIL lights up.

DTC No.	Detected items	Engine operating condition in fail-safe mode
P0102 P0103	Mass air flow sensor circuit	Engine speed will not rise more than 2,400 rpm due to the fuel cut.
P0117 P0118	Engine coolant temperature sensor circuit	Engine coolant temperature will be determined by ECM based on the following condition. CONSULT-III displays the engine coolant temperature decided by ECM.
		Condition: Engine coolant temperature decided (CONSULT-III display) Just as ignition switch is turned ON or START: 40°C (104°F) Approx 4 minutes or more after engine starting: 80°C (176°F) Except as shown above: 40 - 80°C (104 - 176°F) (Depends on the time)
		When the fail-safe system for engine coolant temperature sensor is activated, the cooling fan operates while engine is running.
P0122 P0123 P0222 P0223 P2135	Throttle position sensor	The ECM controls the electric throttle control actuator in regulating the throttle opening in order for the idle position to be within +10 degrees. The ECM regulates the opening speed of the throttle valve to be slower than the normal condition. So, the acceleration will be poor.
P0643	Sensor power supply	ECM stops the electric throttle control actuator control, throttle valve is maintained at a fixed opening (approx. 5 degrees) by the return spring.
P2100 P2103	Throttle control relay	ECM stops the electric throttle control actuator control, throttle valve is maintained at a fixed opening (approx. 5 degrees) by the return spring.
P2101	Electric throttle control function	ECM stops the electric throttle control actuator control, throttle valve is maintained at a fixed opening (approx. 5 degrees) by the return spring.
P2118	Throttle control motor	ECM stops the electric throttle control actuator control, throttle valve is maintained at a fixed opening (approx. 5 degrees) by the return spring.
P2119	Electric throttle control actuator	(When electric throttle control actuator does not function properly due to the return spring malfunction:) ECM controls the electric throttle actuator by regulating the throttle opening around the idle position. The engine speed will not rise more than 2,000 rpm.
		(When throttle valve opening angle in fail-safe mode is not in specified range:) ECM controls the electric throttle control actuator by regulating the throttle opening to 20 degrees or less.
		(When ECM detects the throttle valve is stuck open:) While the vehicle is driving, it slows down gradually by fuel cut. After the vehicle stops, the engine stalls. The engine can restart in N or P (CVT), Neutral (M/T) position, and engine speed will not exceed 1,000 rpm or more.
P2122 P2123 P2127 P2128 P2138	Accelerator pedal position sensor	The ECM controls the electric throttle control actuator in regulating the throttle opening in order for the idle position to be within +10 degrees. The ECM regulates the opening speed of the throttle valve to be slower than the normal condition. So, the acceleration will be poor.

- When there is an open circuit on MIL circuit, the ECM cannot warn the driver by lighting up MIL when there is malfunction on engine control system.
  Therefore, when electrical controlled throttle and part of ECM related diagnoses are continuously detected as NG for 5 trips, ECM warns the driver that engine control system malfunctions and MIL circuit is open by means of operating fail-safe function.
  The fail-safe function also operates when above diagnoses except MIL circuit are detected and demands the driver to repair the malfunction.

Engine operating condition in fail-safe mode	Engine speed will not rise more than 2,500 rpm due to the fuel cut

Symptom Matrix Chart

INFOID:0000000005284572

SYSTEM — BASIC ENGINE CONTROL SYSTEM

		SYMPTOM													Reference page
		HARD/NO START/RESTART (EXCP. HA)	ENGINE STALL	HESITATION/SURGING/FLAT SPOT	SPARK KNOCK/DETONATION	LACK OF POWER/POOR ACCELERATION	HIGH IDLE/LOW IDLE	ROUGH IDLE/HUNTING	IDLING VIBRATION	SLOW/NO RETURN TO IDLE	OVERHEATS/WATER TEMPERATURE HIGH	EXCESSIVE FUEL CONSUMPTION	EXCESSIVE OIL CONSUMPTION	BATTERY DEAD (UNDER CHARGE)	
Warranty symptom code		AA	AB	AC	AD	AE	AF	AG	AH	AJ	AK	AL	AM	HA	
Fuel	Fuel pump circuit	1	1	2	3	2		2	2			3		2	EC-556
	Fuel pressure regulator system	3	3	4	4	4	4	4	4	4		4			EC-101
	Fuel injector circuit	1	1	2	3	2		2	2			2			EC-551
	Evaporative emission system	3	3	4	4	4	4	4	4	4		4			EC-45
Air	Positive crankcase ventilation system	3	3	4	4	4	4	4	4	4		4	1		EC-58
	Incorrect idle speed adjustment						1	1	1	1		1			EC-93
	Electric throttle control actuator	1	1	2	3	3	2	2	2	2		2		2	EC-495, EC-505
Ignition	Incorrect ignition timing adjustment	3	3	1	1	1		1	1			1			EC-93
	Ignition circuit	1	1	2	2	2		2	2			2			EC-561
Main power supply and ground circuit		2	2	3	3	3		3	3		2	3			EC-153
Mass air flow sensor circuit		1	1	2	2	2		2	2			2			EC-185, EC-193
Engine coolant temperature sensor circuit					3		3			3					EC-205, EC-209, EC-218
Air fuel ratio (A/F) sensor 1 circuit															EC-225, EC-231, EC-237, EC-243, EC-531
Throttle position sensor circuit							2			2					EC-212, EC-302, EC-448, EC-450, EC-519
Accelerator pedal position sensor circuit				3	2	1									EC-424, EC-507, EC-512, EC-524
Knock sensor circuit				2								3			EC-313
Engine oil temperature sensor circuit				4		2						3			EC-296, EC-299

	SYMPTOM													Reference page
	HARD/NO START/RESTART (EXCP. HA)	ENGINE STALL	HESITATION/SURGING/FLAT SPOT	SPARK KNOCK/DETONATION	LACK OF POWER/POOR ACCELERATION	HIGH IDLE/LOW IDLE	ROUGH IDLE/HUNTING	IDLING VIBRATION	SLOW/NO RETURN TO IDLE	OVERHEATS/WATER TEMPERATURE HIGH	EXCESSIVE FUEL CONSUMPTION	EXCESSIVE OIL CONSUMPTION	BATTERY DEAD (UNDER CHARGE)	
Warranty symptom code	AA	AB	AC	AD	AE	AF	AG	AH	AJ	AK	AL	AM	HA	
Crankshaft position sensor (POS) circuit	2	2												EC-317
Camshaft position sensor (PHASE) circuit	3	2												EC-324
Vehicle speed signal circuit		2	3		3						3			EC-412
ECM	2	2	3	3	3	3	3	3	3	3	3			EC-421
Intake valve timing control solenoid valve circuit		3	2		1	3	2	2	3		3			EC-180
Park/neutral position (PNP) signal circuit			3		3		3	3			3			EC-429
Refrigerant pressure sensor circuit		2				3			3		4			EC-570
Electrical load signal circuit							3							EC-549
Tumble control valve motor circuit					4	4								EC-480
Tumble control valve position sensor circuit														EC-487
Air conditioner circuit	2	2	3	3	3	3	3	3	3		3		2	MTC-27
ABS actuator and electric unit (control unit)			4											BRC-10

1 - 6: The numbers refer to the order of inspection.

(continued on next page)

SYSTEM — ENGINE MECHANICAL & OTHER

		SYMPTOM													Reference page
		HARD/NO START/RESTART (EXCP. HA)	ENGINE STALL	HESITATION/SURGING/FLAT SPOT	SPARK KNOCK/DETONATION	LACK OF POWER/POOR ACCELERATION	HIGH IDLE/LOW IDLE	ROUGH IDLE/HUNTING	IDLING VIBRATION	SLOW/NO RETURN TO IDLE	OVERHEATS/WATER TEMPERATURE HIGH	EXCESSIVE FUEL CONSUMPTION	EXCESSIVE OIL CONSUMPTION	BATTERY DEAD (UNDER CHARGE)	
Warranty symptom code		AA	AB	AC	AD	AE	AF	AG	AH	AJ	AK	AL	AM	HA	
Fuel	Fuel tank	5	5												FL-10
	Fuel piping			5	5	5		5	5			5			EM-36
	Vapor lock														—
	Valve deposit	5		5	5	5		5	5			5			—
	Poor fuel (Heavy weight gasoline, Low octane)														—
Air	Air duct		5	5		5		5	5			5			EM-16
	Air cleaner														EM-16
	Air leakage from air duct (Mass air flow sensor — electric throttle control actuator)	5			5		5			5					EM-16
	Electric throttle control actuator														EM-18
	Air leakage from intake manifold/ Collector/Gasket														EM-18
Cranking	Battery	1	1	1		1		1	1			1		1	SC-5
	Generator circuit														SC-26
	Starter circuit	3													SC-11
	Signal plate	6													EM-75
	Park/neutral position (PNP) switch (M/T) Transmission range switch (CVT)	4													MT-14 or CVT-60
Engine	Cylinder head	5	5	5	5	5		5	5			5			EM-65
	Cylinder head gasket										4		3		
	Cylinder block	6	6	6	6	6		6	6			6	4		EM-80
	Piston														
	Piston ring														
	Connecting rod														
	Bearing														
	Crankshaft														

		SYMPTOM													Reference page
		HARD/NO START/RESTART (EXCP. HA)	ENGINE STALL	HESITATION/SURGING/FLAT SPOT	SPARK KNOCK/DETONATION	LACK OF POWER/POOR ACCELERATION	HIGH IDLE/LOW IDLE	ROUGH IDLE/HUNTING	IDLING VIBRATION	SLOW/NO RETURN TO IDLE	OVERHEATS/WATER TEMPERATURE HIGH	EXCESSIVE FUEL CONSUMPTION	EXCESSIVE OIL CONSUMPTION	BATTERY DEAD (UNDER CHARGE)	
Warranty symptom code		AA	AB	AC	AD	AE	AF	AG	AH	AJ	AK	AL	AM	HA	
Valve mechanism	Timing chain	5	5	5	5	5		5	5			5			EM-40
	Camshaft														EM-50
	Intake valve timing control														EM-40
	Intake valve												3		EM-65
	Exhaust valve														
Exhaust	Exhaust manifold/Tube/Muffler/Gasket	5	5	5	5	5		5	5			5			EM-23, FL-5
	Three way catalyst														
Lubrication	Oil pan/Oil strainer/Oil pump/Oil filter/Oil gallery	5	5	5	5	5		5	5			5			EM-27, LU-9
	Oil level (Low)/Filthy oil														LU-6
Cooling	Radiator/Hose/Radiator filler cap	5	5	5	5	5		5	5		4	5			CO-15
	Thermostat									5					CO-21
	Water control valve														CO-24
	Water pump														CO-19
	Water gallery														CO-24
	Cooling fan									5					CO-17
	Coolant level (Low)/Contaminated coolant														CO-11
NVIS (NISSAN Vehicle Immobilizer System-NATS)		1	1												BL-170

1 - 6: The numbers refer to the order of inspection.

Engine Control Component Parts Location

INFOID:0000000005284573

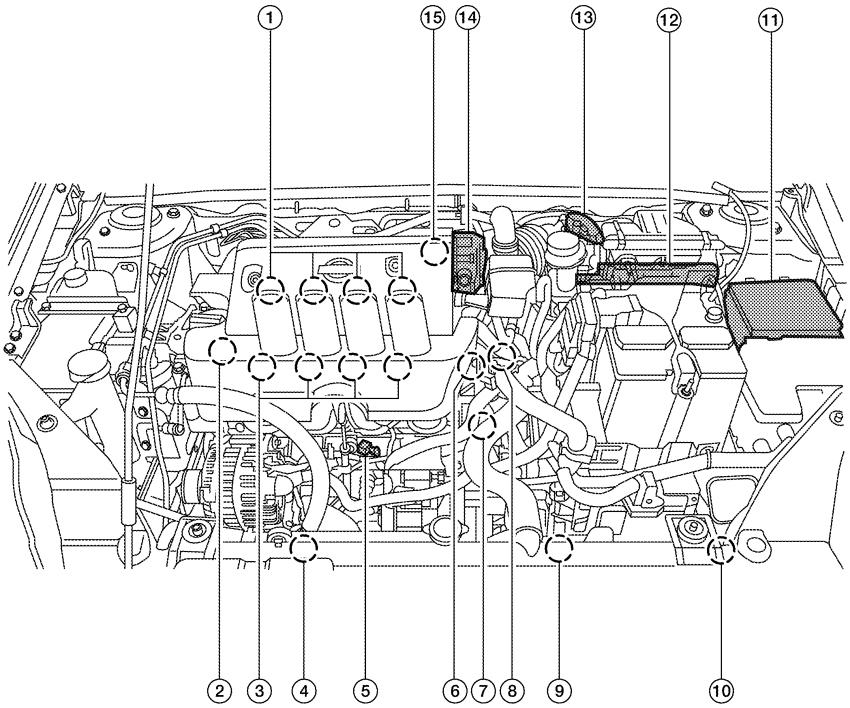

AWBIA0745ZZ

1.	Ignition coil (with power transistor) and spark plug	2.	Intake valve timing control solenoid valve	3.	Fuel injector
4.	Cooling fan motor-1	5.	Knock sensor	6.	Camshaft position sensor (PHASE)
7.	Tumble control valve actuator	8.	Engine coolant temperature sensor	9.	Cooling fan motor-2
10.	Refrigerant pressure sensor	11.	IPDM E/R	12.	ECM
13.	Mass air flow sensor (with intake air temperature sensor)	14.	Electric throttle control actuator (with built in throttle position sensor, throttle control motor)	15.	EVAP canister purge volume control solenoid valve

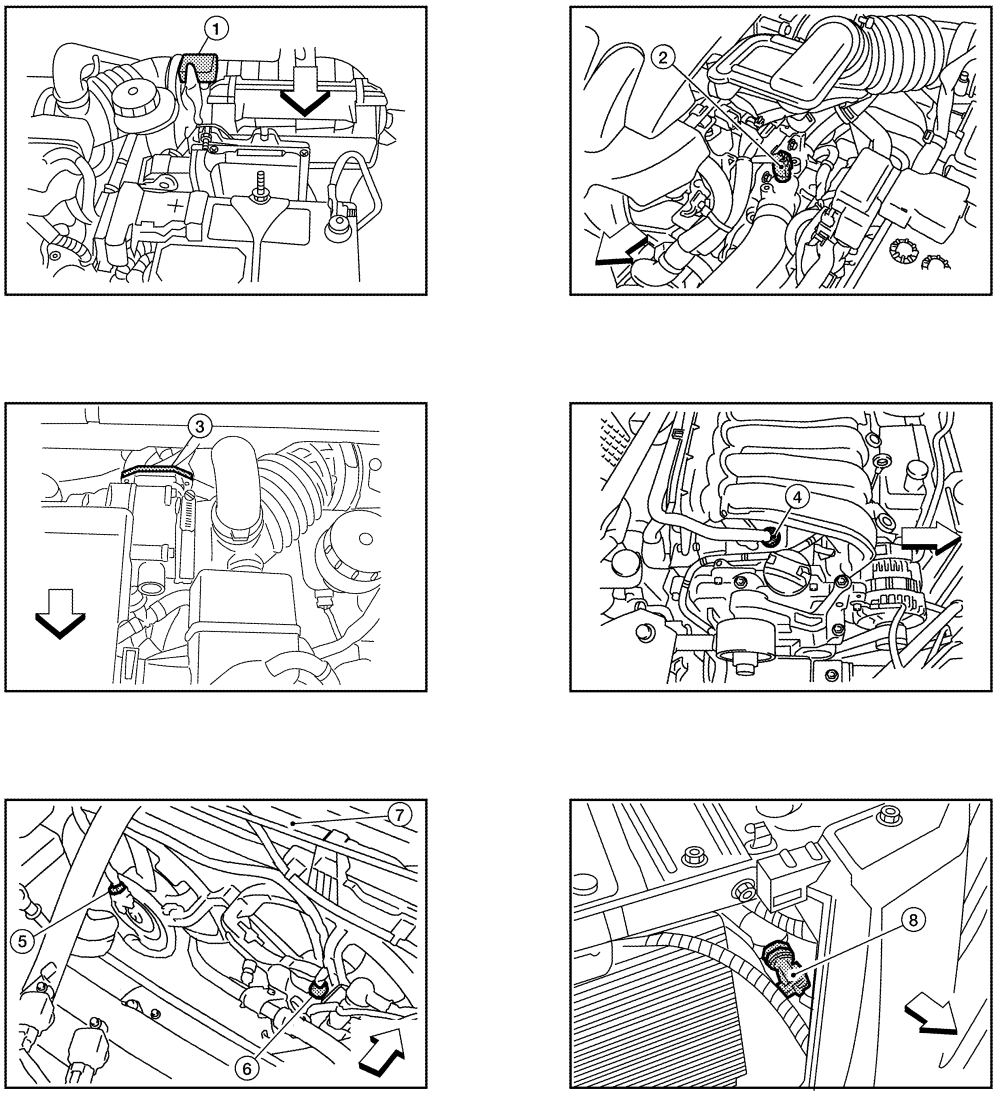

BBIA0756E

⇦ : Vehicle front

1. Mass air flow sensor (with intake air temperature sensor)
2. Engine coolant temperature sensor
3. Electric throttle control actuator (with built in throttle position sensor, throttle control motor)
4. PCV valve
5. Cooling fan motor-1 harness connector
6. Cooling fan motor-2 harness connector
7. Radiator
8. Refrigerant pressure sensor

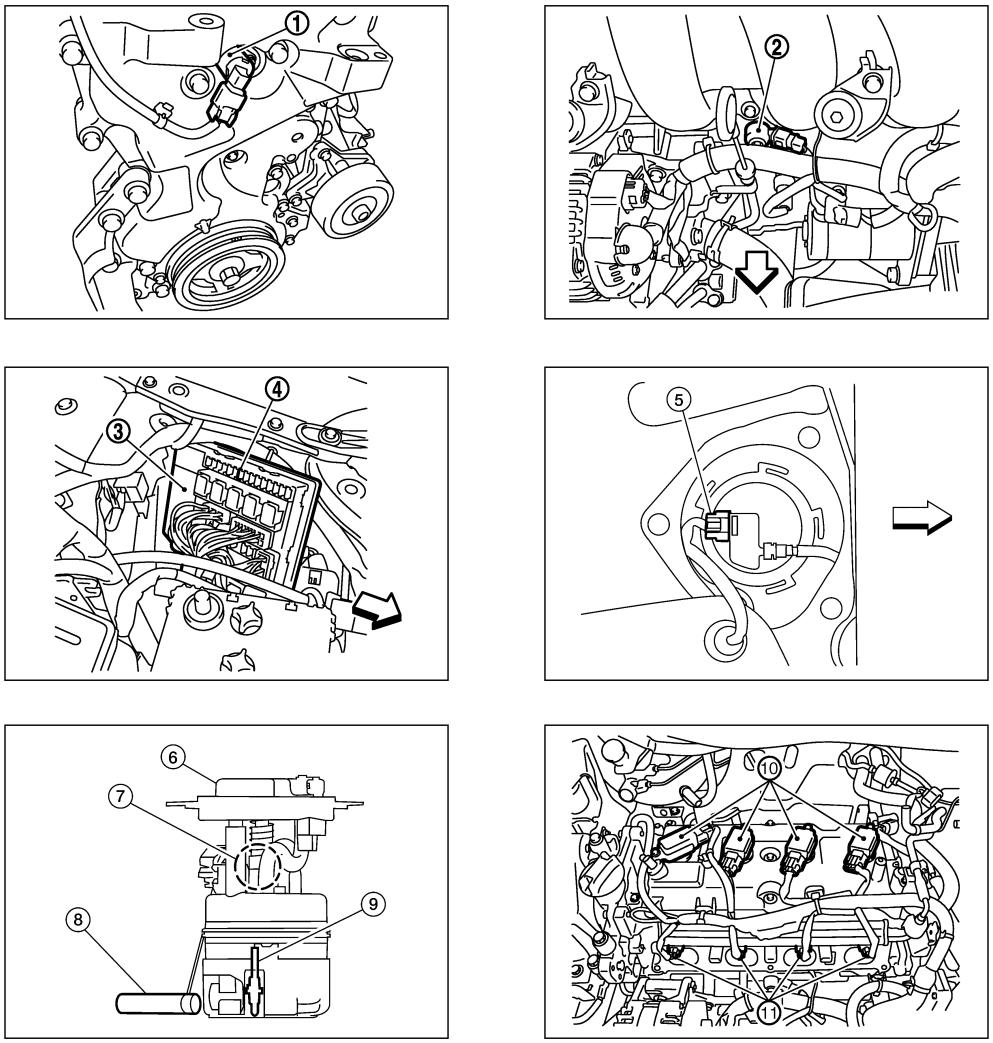

BBIA0725E

⇦ : Vehicle front

1. Intake valve timing control solenoid valve	2. Knock sensor	3. IPDM E/R
4. Fuel pump fuse	5. Fuel level sensor unit and fuel pump harness connector	6. Fuel level sensor unit and fuel pump
7. Fuel pressure regulator	8. Fuel level sensor	9. Fuel tank temperature sensor
10. Ignition coil (with power transistor) and spark plug		

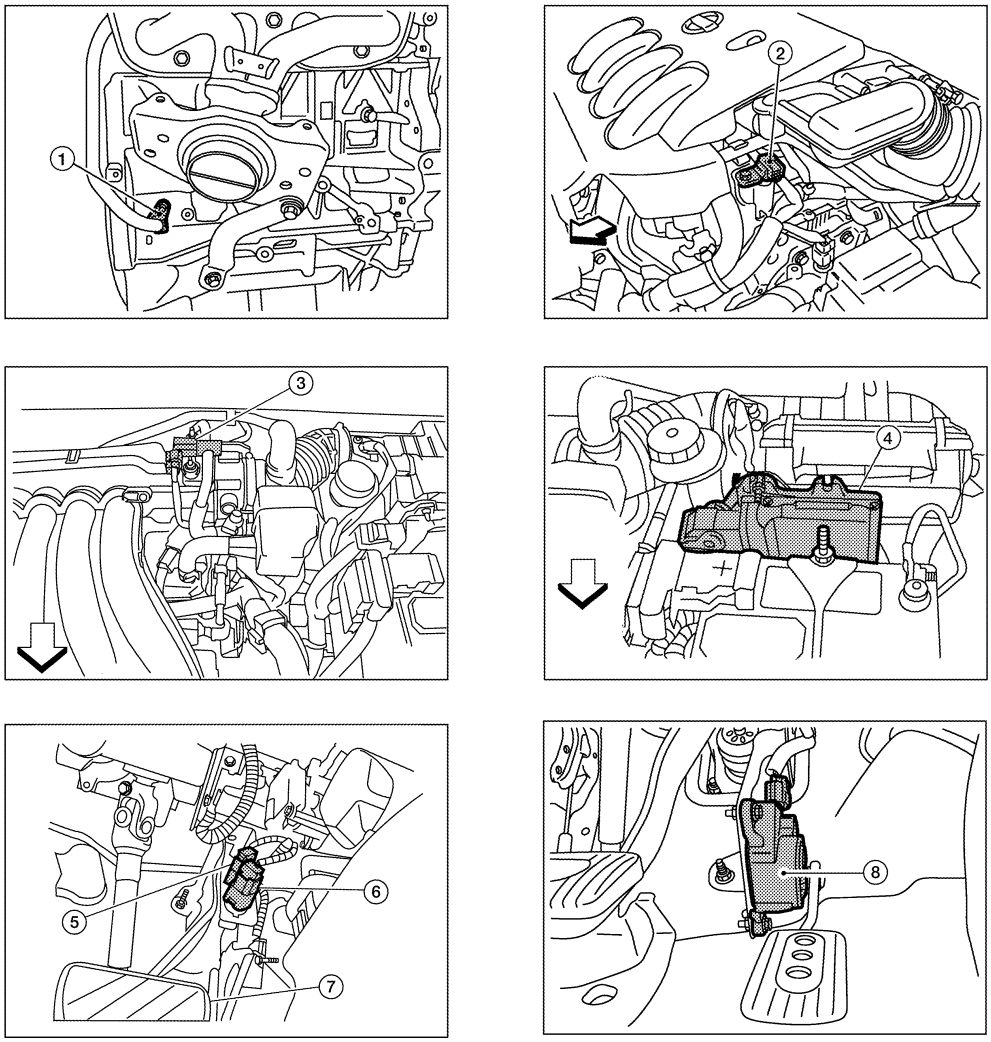

ALBIA0646ZZ

⇦ : Vehicle front

1.	Crankshaft position sensor (POS)	2.	Camshaft position sensor (PHASE)	3.	EVAP canister purge volume control solenoid valve
4.	ECM	5.	Stop lamp switch harness connector	6.	ASCD brake switch harness connector
7.	Brake pedal	8.	Accelerator pedal position sensor		

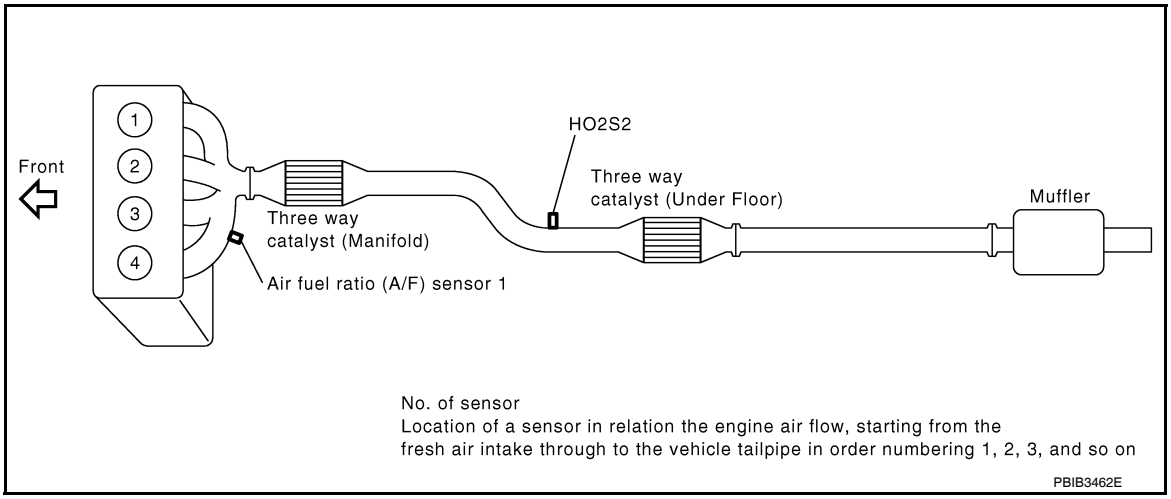

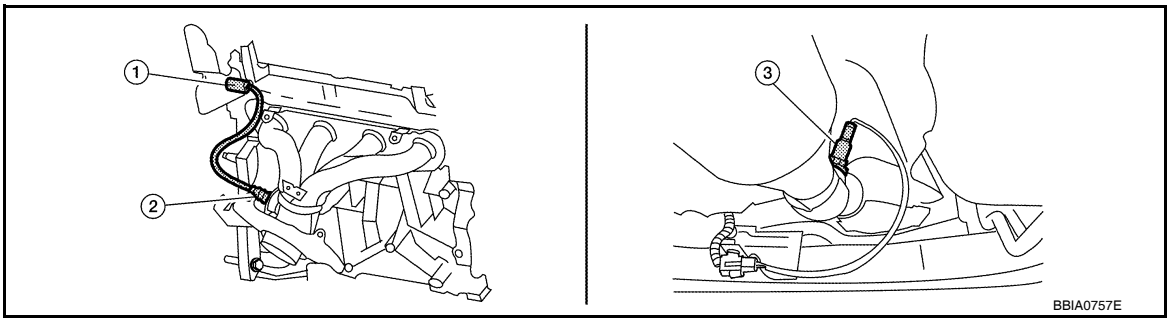

1. Air fuel ratio (A/F) sensor 1 harness connector
2. Air fuel ratio (A/F) sensor 1
3. Heated oxygen sensor 2

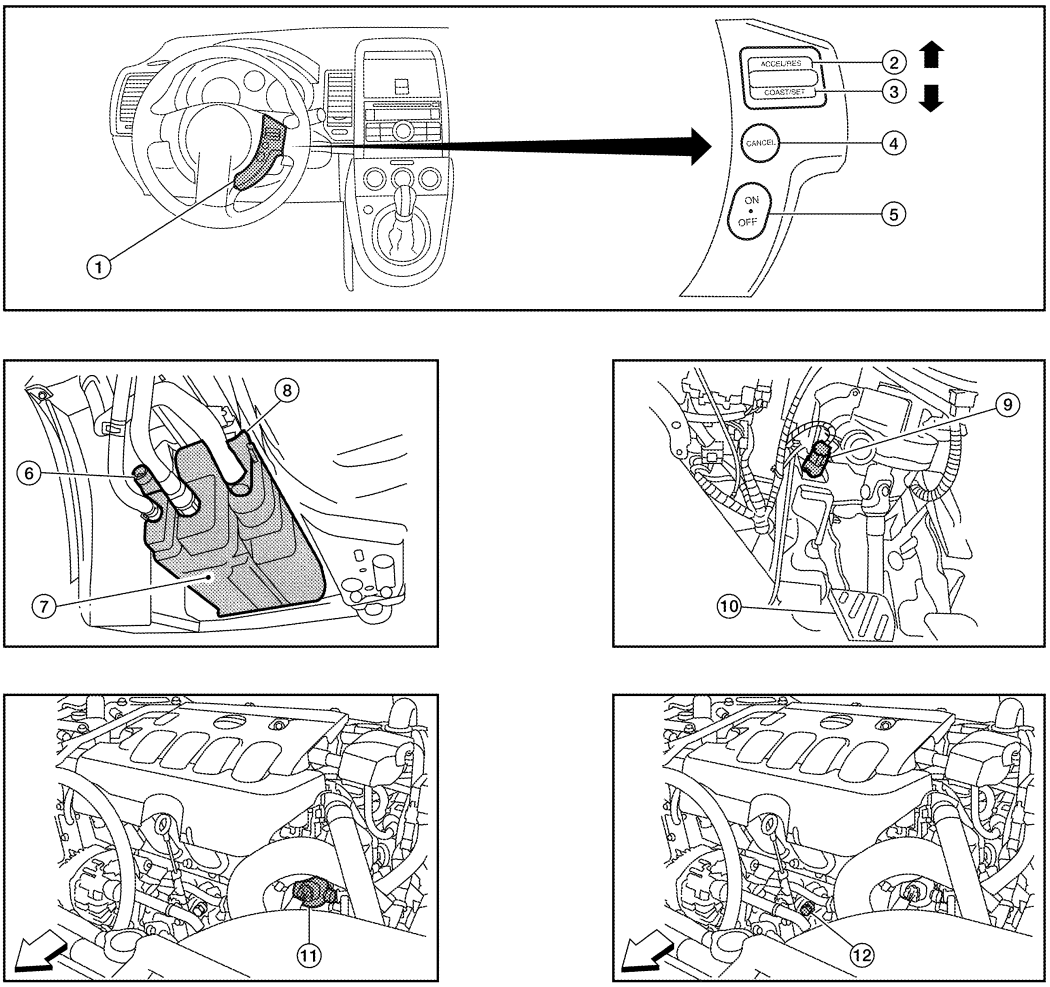

ALBIA0620ZZ

1. ASCD steering switch
2. RESUME/ACCELERATOR switch
3. SET/COAST switch
4. CANCEL switch
5. MAIN switch
6. EVAP control system pressure sensor
7. EVAP canister
8. EVAP canister vent control valve
9. ASCD clutch switch
10. Clutch pedal
11. Tumble control valve actuator
12. Engine oil temperature sensor

Vacuum Hose Drawing

INFOID:0000000005284574

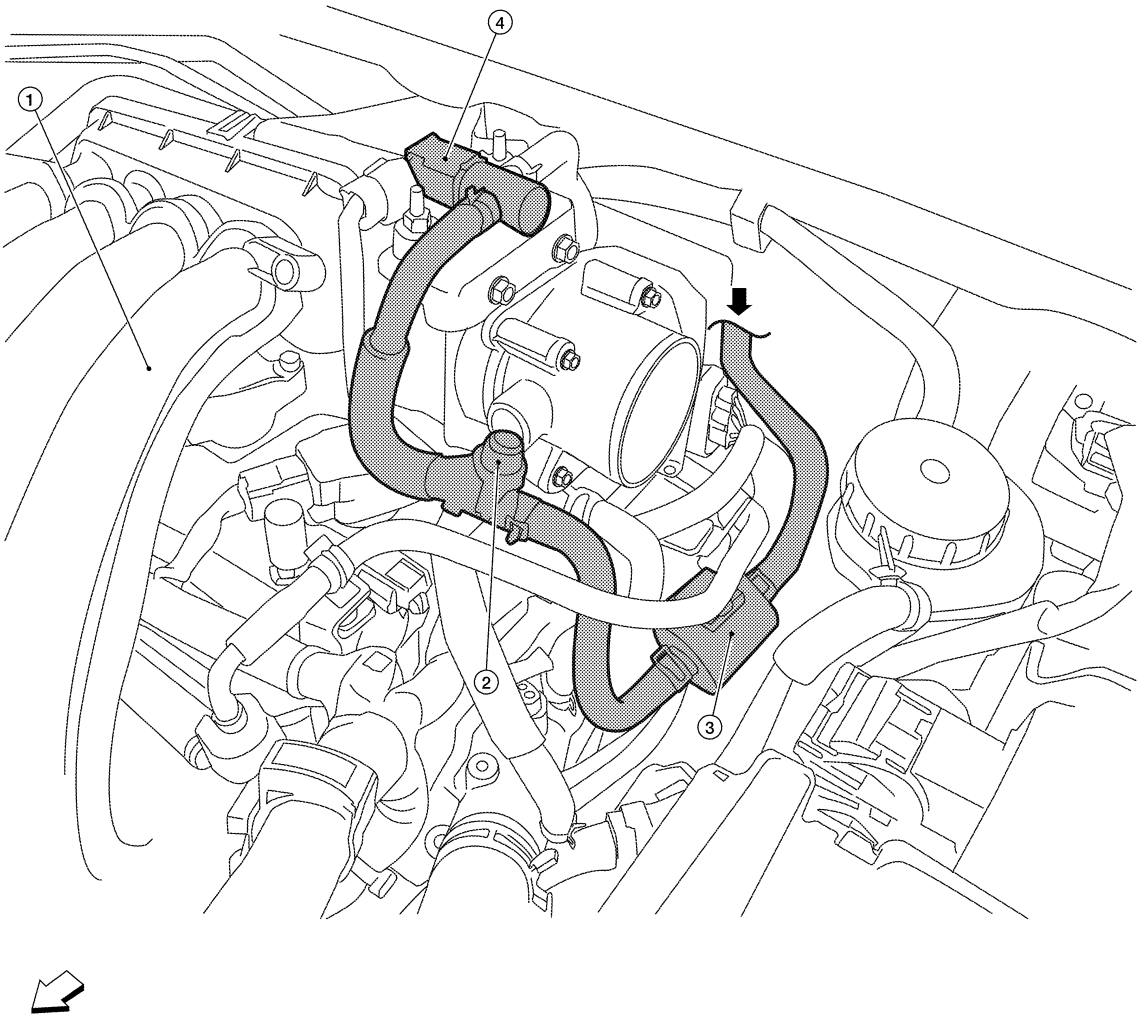

⇦ : Vehicle front

⬅ : From EVAP canister

1. Intake manifold
2. EVAP service port
3. EVAP purge resonator
4. EVAP canister purge volume control solenoid valve

NOTE:
Do not use soapy water or any type of solvent while installing vacuum hoses or purge hoses.

Refer to EC-36, "Schematic" for Vacuum Control System.

Circuit Diagram

INFOID:0000000005284575

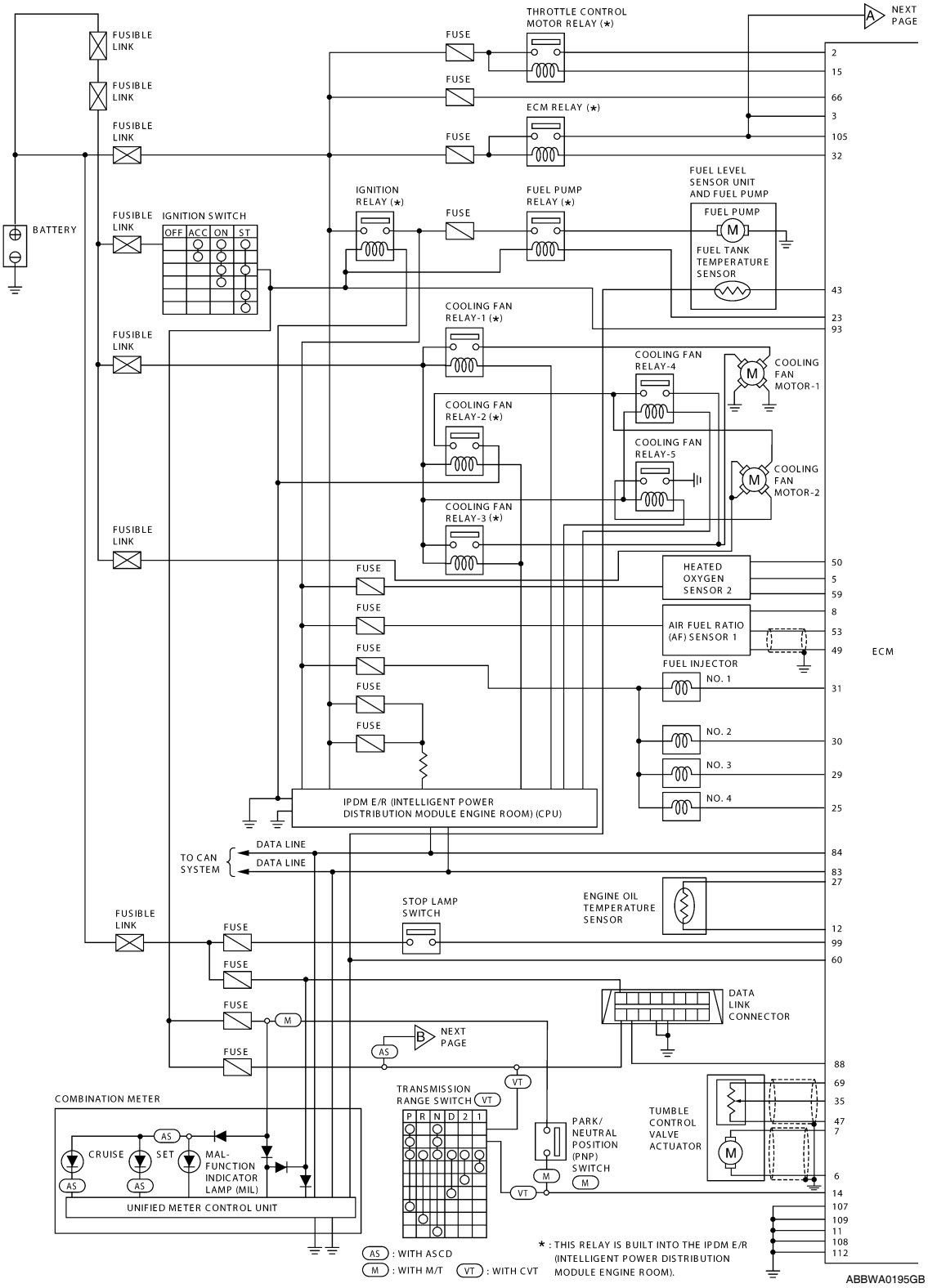

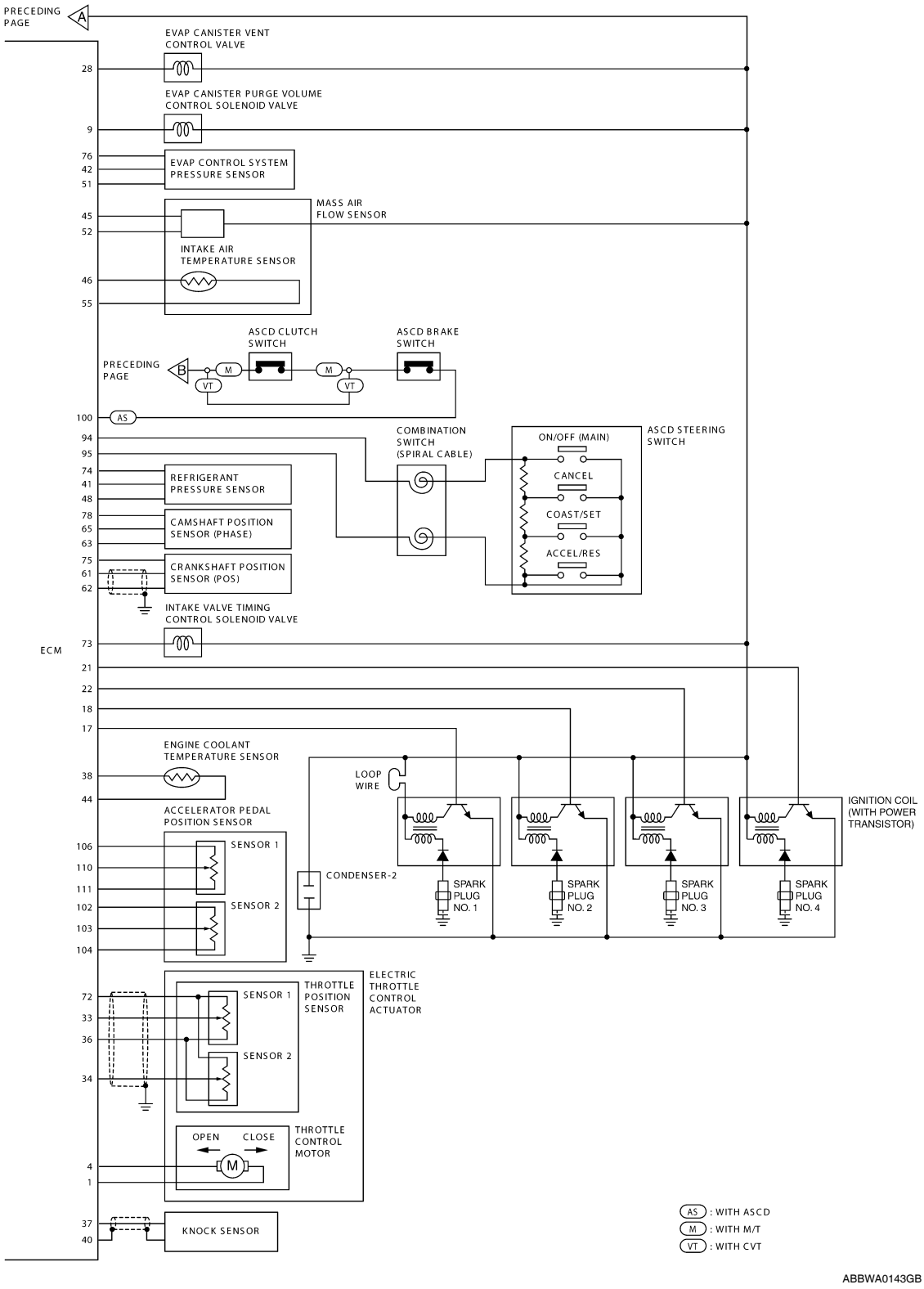
PRECEDING PAGE
A
EVAP CANISTER VENT CONTROL VALVE
28
EVAP CANISTER PURGE VOLUME CONTROL SOLENOID VALVE
9
76
42
51
EVAP CONTROL SYSTEM PRESSURE SENSOR
45
52
MASS AIR FLOW SENSOR
INTAKE AIR TEMPERATURE SENSOR
46
55
ASCD CLUTCH SWITCH
ASCD BRAKE SWITCH
PRECEDING PAGE
B
M
VT
100
AS
94
95
COMBINATION SWITCH (SPIRAL CABLE)
ON/OFF (MAIN)
ASCD STEERING SWITCH
CANCEL
COAST/SET
ACCEL/RES
74
41
48
REFRIGERANT PRESSURE SENSOR
78
65
63
CAMSHAFT POSITION SENSOR (PHASE)
75
61
62
CRANKSHAFT POSITION SENSOR (POS)
INTAKE VALVE TIMING CONTROL SOLENOID VALVE
ECM
73
21
22
18
17
ENGINE COOLANT TEMPERATURE SENSOR
38
44
LOOP WIRE
ACCELERATOR PEDAL POSITION SENSOR
106
110
111
102
103
104
SENSOR 1
SENSOR 2
CONDENSER-2
SPARK PLUG NO. 1
SPARK PLUG NO. 2
SPARK PLUG NO. 3
SPARK PLUG NO. 4
IGNITION COIL (WITH POWER TRANSISTOR)
72
33
36
34
THROTTLE POSITION SENSOR
ELECTRIC THROTTLE CONTROL ACTUATOR
OPEN
CLOSE
THROTTLE CONTROL MOTOR
4
1
37
40
KNOCK SENSOR
AS : WITH ASCD
M : WITH M/T
VT : WITH CVT
ABBWA0143GB

ECM Harness Connector Terminal Layout

INFOID:0000000005284576

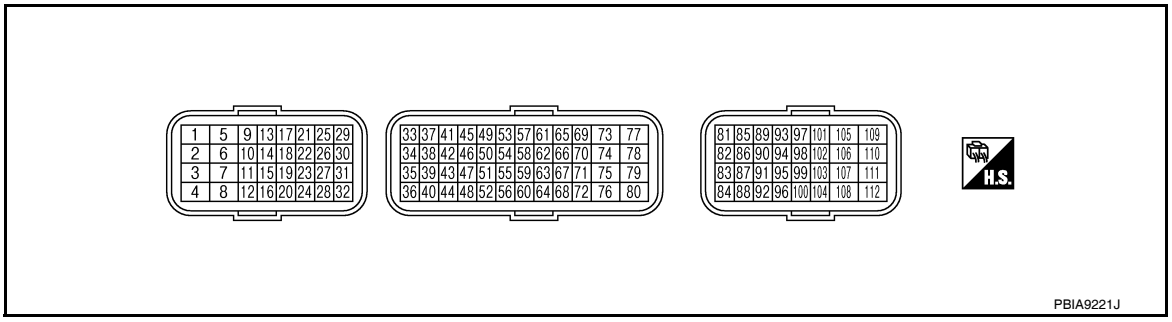

ECM Terminal and Reference Value

INFOID:0000000005284577

PREPARATION

ECM (1) is located in the engine room left side near battery.

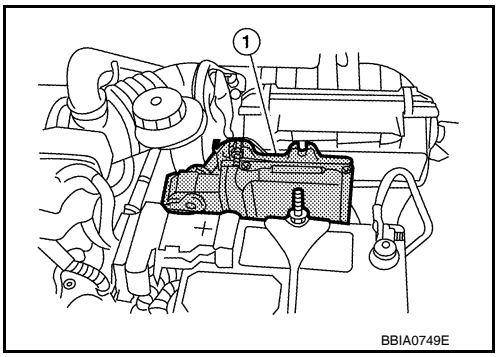

ECM INSPECTION TABLE

Specification data are reference values and are measured between each terminal and ground.
Pulse signal is measured by CONSULT-III.

CAUTION:

Do not use ECM ground terminals when measuring input/output voltage. Doing so may result in damage to the ECMs transistor. Use a ground other than ECM terminals, such as the ground.

TERMINAL NO.	WIRE COLOR	ITEM	CONDITION	DATA (DC Voltage)
1	V	Throttle control motor (Open)	**[Ignition switch: ON]** • Engine stopped • Shift lever: D (CVT), 1st (M/T) • Accelerator pedal: Fully depressed	Approximately 3.2 V★ 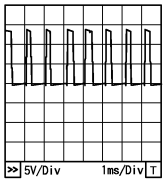 PBIA8150J
2	Y/B	Throttle control motor power supply	**[Ignition switch: ON]**	BATTERY VOLTAGE (11 - 14 V)
3	L/W	Tumble control vale motor power supply	**[Ignition switch: ON]**	BATTERY VOLTAGE (11 - 14 V)
4	L/R	Throttle control motor (Close)	**[Ignition switch: ON]** • Engine stopped • Shift lever: D (CVT), 1st (M/T) • Accelerator pedal: Fully released	Approximately 1.8 V★ 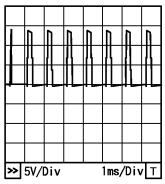 PBIA8149J

TERMINAL NO.	WIRE COLOR	ITEM	CONDITION	DATA (DC Voltage)
5	B/W	Heated oxygen sensor 2 heater	**[Engine is running]** • Engine speed: Below 3,600 rpm after the following conditions are met. - Engine: After warming up - Keeping the engine speed between 3,500 and 4,000 rpm for 1 minute and at idle for 1 minute under no load.	Approximately 10 V★ 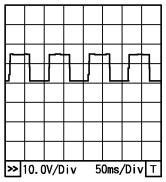 PBIA8148J
			[Ignition switch: ON] • Engine stopped **[Engine is running]** • Engine speed: Above 3,600 rpm.	BATTERY VOLTAGE (11 - 14 V)
6	R	Tumble control valve motor (Open)	**[Ignition switch: ON → OFF]** • For a few seconds after turning ignition switch ON	0 V ↓ BATTERY VOLTAGE (11 - 14 V) ↓ 0 V
7	W	Tumble control valve motor (Close)	**[Ignition switch: OFF → ON]** • For a few seconds after turning ignition switch ON	0 V ↓ BATTERY VOLTAGE (11 - 14 V) ↓ 0 V
8	BR/W	A/F sensor 1 heater	**[Engine is running]** • **Warm-up condition** • Idle speed (More than 140 seconds after starting engine)	Approximately 2.9 - 8.8 V★ 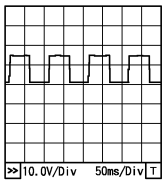 PBIA8148J
9	W/B	EVAP canister purge volume control solenoid valve	**[Engine is running]** • Idle speed • Accelerator pedal: Not depressed even slightly, after engine starting.	BATTERY VOLTAGE (11 - 14 V)★ 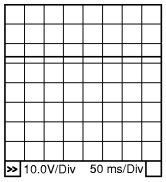 PBIB0050E
			[Engine is running] • Engine speed: About 2,000 rpm (More than 100 seconds after starting engine)	Approximately 10 V★ 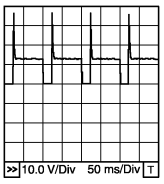 PBIB0520E
11	B	ECM ground	**[Engine is running]** • Idle speed	Body ground
12	GR	Sensor ground (Engine oil temperature sensor)	**[Engine is running]** • **Warm-up condition** • Idle speed	Approximately 0 V

TERMINAL NO.	WIRE COLOR	ITEM	CONDITION	DATA (DC Voltage)
14	BR/R	PNP signal	**[Ignition switch: ON]** • Shift lever: P or N (CVT), Neutral (M/T)	BATTERY VOLTAGE (11 - 14 V)
			[Ignition switch: ON] • Except above	Approximately 0 V
15	G/Y	Throttle control motor relay	**[Ignition switch: OFF]**	BATTERY VOLTAGE (11 - 14 V)
			[Ignition switch: ON]	0 - 1.0 V
17 18 21 22	V BR/Y G Y	Ignition signal No. 1 Ignition signal No. 2 Ignition signal No. 4 Ignition signal No. 3	**[Engine is running]** • **Warm-up condition** • Idle speed **NOTE:** The pulse cycle changes depending on rpm at idle.	0 - 0.3 V★ 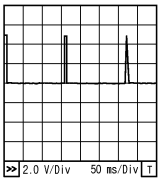 PBIA9265J
			[Engine is running] • **Warm-up condition** • Engine speed: 2,500 rpm.	0.2 - 0.5 V★ 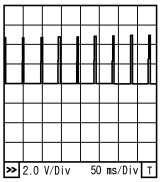 PBIA9266J
23	B/O	Fuel pump relay	**[Ignition switch: ON]** • For 1 second after turning ignition switch ON **[Engine is running]**	0 - 1.0 V
			[Ignition switch: ON] • More than 1 second after turning ignition switch ON	BATTERY VOLTAGE (11 - 14 V)
25 29 30 31	R O GR L	Fuel injector No. 4 Fuel injector No. 3 Fuel injector No. 2 Fuel injector No. 1	**[Engine is running]** • **Warm-up condition** • Idle speed **NOTE:** The pulse cycle changes depending on rpm at idle.	BATTERY VOLTAGE (11 - 14 V)★ 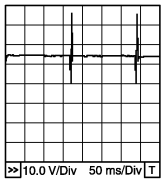 PBIB0529E
			[Engine is running] • **Warm-up condition** • Engine speed: 2,000 rpm	BATTERY VOLTAGE (11 - 14 V)★ 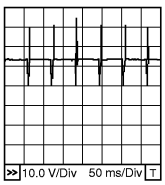 PBIA4943J
27	P	Engine oil temperature sensor	**[Engine is running]**	Approximately 0 - 4.8 V Output voltage varies with engine coolant temperature.
28	L/Y	EVAP canister vent control valve	**[Ignition switch: ON]**	BATTERY VOLTAGE (11 - 14 V)

TERMINAL NO.	WIRE COLOR	ITEM	CONDITION	DATA (DC Voltage)
32	R/G	ECM relay (Self shut-off)	**[Engine is running]** **[Ignition switch: OFF]** • For a few seconds after turning ignition switch OFF	0 - 1.0 V
			[Ignition switch: OFF] • More than a few seconds after turning ignition switch OFF	BATTERY VOLTAGE (11 - 14 V)
33	G	Throttle position sensor 1	**[Ignition switch: ON]** • Engine stopped • Shift lever: D (CVT), 1st (M/T) • Accelerator pedal: Fully released	More than 0.36 V
			[Ignition switch: ON] • Engine stopped • Shift lever: D (CVT), 1st (M/T) • Accelerator pedal: Fully depressed	Less than 4.75 V
34	W	Throttle position sensor 2	**[Ignition switch: ON]** • Engine stopped • Shift lever: D (CVT), 1st (M/T) • Accelerator pedal: Fully released	Less than 4.75 V
			[Ignition switch: ON] • Engine stopped • Shift lever: D (CVT), 1st (M/T) • Accelerator pedal: Fully depressed	More than 0.36 V
35	L/G	Tumble control valve position sensor	**[Engine is running]** • Engine coolant temperature: Between 5°C (41°F) and 45°C (113°F) • Engine speed: Less than 3,200 rpm • Accelerator pedal: Fully released	Less than 1.2 V
			[Engine is running] • Engine coolant temperature: Between 5°C (41°F) and 45°C (113°F) • Accelerator pedal: Slightly depressed	More than 2.9 V
36	B	Sensor ground (Throttle position sensor)	**[Engine is running]** • **Warm-up condition** • Idle speed	Approximately 0 V
37	W	Knock sensor	**[Engine is running]** • Idle speed	Approximately 2.5 V
38	P	Engine coolant temperature sensor	**[Engine is running]**	Approximately 0 - 4.8 V Output voltage varies with engine coolant temperature.
40	GR	Sensor ground (Knock sensor)	**[Engine is running]** • **Warm-up condition** • Idle speed	Approximately 0 V
41	L	Refrigerant pressure sensor	**[Engine is running]** • **Warm-up condition** • Both A/C switch and blower fan switch: ON (Compressor operates.)	1.0 - 4.0 V
42	R/Y	EVAP control system pressure sensor	**[Ignition switch: ON]**	Approximately 1.8 - 4.8 V
43	G/O	Fuel tank temperature sensor	**[Engine is running]**	Approximately 0 - 4.8 V Output voltage varies with fuel tank temperature
44	GR	Sensor ground (Engine coolant temperature sensor)	**[Engine is running]** • **Warm-up condition** • Idle speed	Approximately 0 V

TERMINAL NO.	WIRE COLOR	ITEM	CONDITION	DATA (DC Voltage)
45	V	Mass air flow sensor	**[Engine is running]** • **Warm-up condition** • Idle speed	0.9 - 1.2 V
			[Engine is running] • **Warm-up condition** • Engine speed: 2,500 rpm	1.5 - 1.8 V
46	BR/Y	Intake air temperature sensor	**[Engine is running]**	Approximately 0 - 4.8 V Output voltage varies with intake air temperature.
47	L/R	Sensor ground (Tumble control valve position sensor)	**[Engine is running]** • **Warm-up condition** • Idle speed	Approximately 0 V
48	R/G	Sensor ground (Refrigerant pressure sensor)	**[Engine is running]** • **Warm-up condition** • Idle speed	Approximately 0 V
49	L/R	A/F sensor 1	**[Engine is running]** • **Warm-up condition** • Engine speed: 2,000 rpm	Approximately 1.8 V Output voltage varies with air fuel ratio.
50	G	Heated oxygen sensor 2	**[Engine is running]** • Revving engine from idle to 3,000 rpm quickly after the following conditions are met. - Engine: After warming up - Keeping the engine speed between 3,500 and 4,000 rpm for 1 minute and at idle for 1 minute under no load.	0 - Approximately 1.0 V
51	V/R	Sensor ground (EVAP control system pressure sensor)	**[Engine is running]** • **Warm-up condition** • Idle speed	Approximately 0 V
52	B/W	Sensor ground (Mass air flow sensor)	**[Engine is running]** • **Warm-up condition** • Idle speed	Approximately 0 V
53	L/G	A/F sensor 1	**[Ignition switch: ON]**	Approximately 2.2 V
55	O	Sensor ground (Intake air temperature sensor)	**[Engine is running]** • **Warm-up condition** • Idle speed	Approximately 0 V
59	B/Y	Sensor ground (Heated oxygen sensor 2)	**[Engine is running]** • **Warm-up condition** • Idle speed	Approximately 0 V
60	B	Sensor ground (Fuel tank temperature sensor)	**[Engine is running]** • **Warm-up condition** • Idle speed	Approximately 0 V

TERMINAL NO.	WIRE COLOR	ITEM	CONDITION	DATA (DC Voltage)
61	W	Crankshaft position sensor (POS)	**[Engine is running]** • **Warm-up condition** • Idle speed **NOTE:** The pulse cycle changes depending on rpm at idle.	Approximately 4.0 V★ 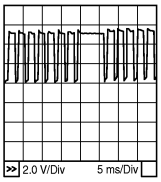 PBIB2998E
			[Engine is running] • Engine speed: 2,000 rpm	Approximately 4.0 V★ 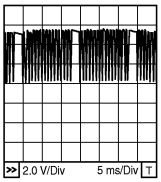 PBIB2999E
62	R	Sensor ground [Crankshaft position sensor (POS)]	**[Engine is running]** • **Warm-up condition** • Idle speed	Approximately 0 V
63	B/R	Sensor ground [Camshaft position sensor (PHASE)]	**[Engine is running]** • **Warm-up condition** • Idle speed	Approximately 0 V
65	R	Camshaft position sensor (PHASE)	**[Engine is running]** • **Warm-up condition** • Idle speed **NOTE:** The pulse cycle changes depending on rpm at idle.	1.0 - 2.0 V★ 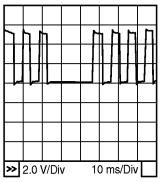 PBIB2986E
			[Engine is running] • Engine speed: 2,000 rpm.	1.0 - 2.0 V★ 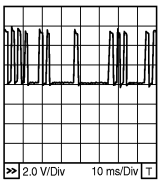 PBIB2987E
66	Y/R	Power supply for ECM (Back-up)	**[Ignition switch: OFF]**	BATTERY VOLTAGE (11 - 14 V)
69	LG/B	Sensor power supply (Tumble control valve position sensor)	**[Ignition switch: ON]**	Approximately 5 V
72	R	Sensor power supply (Throttle position sensor)	**[Ignition switch: ON]**	Approximately 5 V

TERMINAL NO.	WIRE COLOR	ITEM	CONDITION	DATA (DC Voltage)
73	Y/R	Intake valve timing control solenoid valve	**[Engine is running]** • **Warm-up condition** • Idle speed	BATTERY VOLTAGE (11 - 14 V)
			[Engine is running] • **Warm-up condition** • When revving engine up to 2,000 rpm quickly	7 - 10 V★ 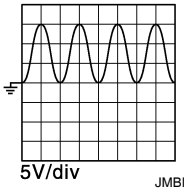 JMBIA1638GB
74	G/W	Sensor power supply (Refrigerant pressure sensor)	**[Ignition switch: ON]**	Approximately 5 V
75	Y	Sensor power supply [Crankshaft position sensor (POS)]	**[Ignition switch: ON]**	Approximately 5 V
76	V/W	EVAP control system pressure sensor power supply	**[Ignition switch: ON]**	Approximately 5 V
78	G/Y	Sensor power supply [Camshaft position sensor (PHASE)]	**[Ignition switch: ON]**	Approximately 5 V
83	P	CAN communication line	—	—
84	L	CAN communication line	—	—
88	P/L	DATA link connector	—	—
93	B/R	Ignition switch	**[Ignition switch: OFF]**	0 V
			[Ignition switch: ON]	BATTERY VOLTAGE (11 - 14 V)
94	L/Y	ASCD steering switch	**[Ignition switch: ON]** • ASCD steering switch: OFF	Approximately 4 V
			[Ignition switch: ON] • MAIN switch: Pressed	Approximately 0 V
			[Ignition switch: ON] • CANCEL switch: Pressed	Approximately 1 V
			[Ignition switch: ON] • RESUME/ACCELERATE switch: Pressed	Approximately 3 V
			[Ignition switch: ON] • SET/COAST switch: Pressed	Approximately 2 V
95	B/Y	Sensor ground (ASCD steering switch)	**[Engine is running]** • **Warm-up condition** • Idle speed	Approximately 0 V
99	R/G	Stop lamp switch	**[Ignition switch: OFF]** • Brake pedal: Fully released	Approximately 0 V
			[Ignition switch: OFF] • Brake pedal: Slightly depressed	BATTERY VOLTAGE (11 - 14 V)
100	G/B	ASCD brake switch	**[Ignition switch: ON]** • Brake pedal: Slightly depressed (CVT) • Brake pedal and/or clutch pedal: Slightly depressed (M/T)	Approximately 0 V
			[Ignition switch: ON] • Brake pedal: Fully released (CVT) • Brake pedal and clutch pedal: Fully released (M/T)	BATTERY VOLTAGE (11 - 14 V)

TERMINAL NO.	WIRE COLOR	ITEM	CONDITION	DATA (DC Voltage)
102	BR/Y	Sensor power supply (Accelerator pedal position sensor 2)	**[Ignition switch: ON]**	Approximately 5 V
103	Y/G	Accelerator pedal position sensor 2	**[Ignition switch: ON]** • Engine stopped • Accelerator pedal: Fully released	0.3 - 0.6 V
			[Ignition switch: ON] • Engine stopped • Accelerator pedal: Fully depressed	1.95 - 2.4 V
104	B/P	Sensor ground (Accelerator pedal position sensor 2)	**[Engine is running]** • **Warm-up condition** • Idle speed	Approximately 0 V
105	G	Power supply for ECM	**[Ignition switch: ON]**	BATTERY VOLTAGE (11 - 14 V)
106	O	Sensor power supply (Accelerator pedal position sensor 1)	**[Ignition switch: ON]**	Approximately 5 V
107 108 109	B B B	ECM ground	**[Engine is running]** • Idle speed	Body ground
110	W	Accelerator pedal position sensor 1	**[Ignition switch: ON]** • Engine stopped • Accelerator pedal: Fully released	0.6 - 0.9 V
			[Ignition switch: ON] • Engine stopped • Accelerator pedal: Fully depressed	3.9 - 4.7 V
111	B/W	Sensor ground (Accelerator pedal position sensor 1)	**[Engine is running]** • **Warm-up condition** • Idle speed	Approximately 0 V
112	B	ECM ground	**[Engine is running]** • Idle speed	Body ground

★: Average voltage for pulse signal (Actual pulse signal can be confirmed by oscilloscope.)

CONSULT-III Function (ENGINE)

INFOID:0000000005284578

FUNCTION

Diagnostic test mode	Function
Work support	This mode enables a technician to adjust some devices faster and more accurately by following the indications on the CONSULT-III unit.
Self Diagnostic result	Self-diagnostic results such as 1st trip DTC, DTCs and 1st trip freeze frame data or freeze frame data can be read and erased quickly.*
Data Monitor	Input/Output data in the ECM can be read.
Active Test	Diagnostic Test Mode in which CONSULT-III drives some actuators apart from the ECMs and also shifts some parameters in a specified range.
Function Test	This mode is used to inform customers when their vehicle condition requires periodic maintenance.
DTC & SRT Confirmation	The status of system monitoring tests and the self-diagnosis status/result can be confirmed.
Ecu Identification	ECM part number can be read.

*: The following emission-related diagnostic information is cleared when the ECM memory is erased.

- Diagnostic trouble codes
- 1st trip diagnostic trouble codes
- Freeze frame data

- 1st trip freeze frame data
- System readiness test (SRT) codes
- Test values

INSPECTION PROCEDURE

Refer to "CONSULT-III Software Operation Manual" for more information.

WORK SUPPORT MODE

Work Item

Work item	Condition	Usage
FUEL PRESSURE RELEASE	• FUEL PUMP WILL STOP BY TOUCHING “START” DURING IDLING. CRANK A FEW TIMES AFTER ENGINE STALLS.	When releasing fuel pressure from fuel line
IDLE AIR VOL LEARN	• THE IDLE AIR VOLUME THAT KEEPS THE ENGINE WITHIN THE SPECIFIED RANGE IS MEMORIZED IN ECM.	When learning the idle air volume
SELF-LEARNING CONT	• THE COEFFICIENT OF SELF-LEARNING CONTROL MIXTURE RATIO RETURNS TO THE ORIGINAL COEFFICIENT.	When clearing the coefficient of self-learning control value
EVAP SYSTEM CLOSE	CLOSE THE EVAP CANISTER VENT CONTROL VALVE IN ORDER TO MAKE EVAP SYSTEM CLOSE UNDER THE FOLLOWING CONDITIONS. • IGN SW “ON” • ENGINE NOT RUNNING • AMBIENT TEMPERATURE IS ABOVE 0°C (32°F). • NO VACUUM AND NO HIGH PRESSURE IN EVAP SYSTEM • FUEL TANK TEMP. IS MORE THAN 0°C (32°F). • WITHIN 10 MINUTES AFTER STARTING “EVAP SYSTEM CLOSE” • WHEN TRYING TO EXECUTE “EVAP SYSTEM CLOSE” UNDER THE CONDITION EXCEPT ABOVE, CONSULT-III WILL DISCONTINUE IT AND DISPLAY APPROPRIATE INSTRUCTION. **NOTE:** **WHEN STARTING ENGINE, CONSULT-III MAY DISPLAY “BATTERY VOLTAGE IS LOW. CHARGE BATTERY”, EVEN IN USING CHARGED BATTERY.**	When detecting EVAP vapor leak point of EVAP system
TARGET IDLE RPM ADJ*	• IDLE CONDITION	When setting target idle speed
TARGET IGN TIM ADJ*	• IDLE CONDITION	When adjusting target ignition timing
VIN REGISTRATION	• IN THIS MODE, VIN IS REGISTERED IN ECM.	When registering VIN in ECM

*: This function is not necessary in the usual service procedure.

SELF-DIAG RESULTS MODE

Self Diagnostic Item

Regarding items of DTC and 1st trip DTC, refer to EC-62, "Emission-related Diagnostic Information".

Freeze Frame Data and 1st Trip Freeze Frame Data

Freeze frame data item*	Description
DIAG TROUBLE CODE	• The engine control component part/control system has a trouble code, it is displayed as DTC.
FUEL SYS-B1	• “Fuel injection system status” at the moment a malfunction is detected is displayed. • One mode in the following is displayed. Mode2: Open loop due to detected system malfunction Mode3: Open loop due to driving conditions (power enrichment, deceleration enleanment) Mode4: Closed loop - using oxygen sensor(s) as feedback for fuel control Mode5: Open loop - has not yet satisfied condition to go to closed loop
CAL/LD VALUE [%]	• The calculated load value at the moment a malfunction is detected is displayed.

Freeze frame data item*	Description
COOLANT TEMP [°C] or [°F]	• The engine coolant temperature at the moment a malfunction is detected is displayed.
L-FUEL TRM-B1 [%]	• "Long-term fuel trim" at the moment a malfunction is detected is displayed. • The long-term fuel trim indicates much more gradual feedback compensation to the base fuel schedule than short-term fuel trim.
S-FUEL TRM-B1 [%]	• "Short-term fuel trim" at the moment a malfunction is detected is displayed. • The short-term fuel trim indicates dynamic or instantaneous feedback compensation to the base fuel schedule.
ENGINE SPEED [rpm]	• The engine speed at the moment a malfunction is detected is displayed.
VEHICL SPEED [km/h] or [mph]	• The vehicle speed at the moment a malfunction is detected is displayed.
ABSOL TH-P/S [%]	• The throttle valve opening angle at the moment a malfunction is detected is displayed.
B/FUEL SCHDL [msec]	• The base fuel schedule at the moment a malfunction is detected is displayed.
INT/A TEMP SE [°C] or [°F]	• The intake air temperature at the moment a malfunction is detected is displayed.
FUEL SYS-B2	• These items are displayed but are not applicable to this model.
L-FUEL TRM-B2 [%]	
S-FUEL TRM-B2 [%]	
INT MANI PRES [kPa]	
COMBUST CONDITION	

*: The items are the same as those of 1st trip freeze frame data.

DATA MONITOR MODE

Monitored Item

Monitored item [Unit]	Description	Remarks
ENG SPEED [rpm]	• Indicates the engine speed computed from the signals of the crankshaft position sensor (POS) and camshaft position sensor (PHASE).	• Accuracy becomes poor if engine speed drops below the idle rpm. • If the signal is interrupted while the engine is running, an abnormal value may be indicated.
MAS A/F SE-B1 [V]	• The signal voltage of the mass air flow sensor is displayed.	• When the engine is stopped, a certain value is indicated. • When engine is running specification range is indicated in "SPEC".
B/FUEL SCHDL [ms]	• "Base fuel schedule" indicates the fuel injection pulse width programmed into ECM, prior to any learned on board correction.	• When engine is running specification range is indicated in "SPEC".
A/F ALPHA-B1 [%]	• The mean value of the air-fuel ratio feedback correction factor per cycle is indicated.	• When the engine is stopped, a certain value is indicated. • When engine is running specification range is indicated in "SPEC". • This data also includes the data for the air/fuel ratio learning control.
COOLAN TEMP/S [°C] or [°F]	• The engine coolant temperature (determined by the signal voltage of the engine coolant temperature sensor) is displayed.	• When the engine coolant temperature sensor is open or short-circuited, ECM enters fail-safe mode. The engine coolant temperature determined by the ECM is displayed.
A/F SEN1 (B1) [V]	• The A/F signal computed from the input signal of the A/F sensor 1 is displayed.	
HO2S2 (B1) [V]	• The signal voltage of the heated oxygen sensor 2 is displayed.	

Monitored item [Unit]	Description	Remarks
HO2S2 MNTR (B1) [RICH/LEAN]	• Display of heated oxygen sensor 2 signal: RICH: means the amount of oxygen after three way catalyst is relatively small. LEAN: means the amount of oxygen after three way catalyst is relatively large.	• When the engine is stopped, a certain value is indicated.
VHCL SPEED SE [km/h] or [mph]	• The vehicle speed computed from the vehicle speed signal is displayed.	
BATTERY VOLT [V]	• The power supply voltage of ECM is displayed.	
ACCEL SEN 1 [V]	• The accelerator pedal position sensor signal voltage is displayed.	• ACCEL SEN 2 signal is converted by ECM internally. Thus, it differs from ECM terminal voltage signal.
ACCEL SEN 2 [V]		
TP SEN 1-B1 [V]	• The throttle position sensor signal voltage is displayed.	• TP SEN 2-B1 signal is converted by ECM internally. Thus, it differs from ECM terminal voltage signal.
TP SEN 2-B1 [V]		
FUEL T/TMP SE [°C] or [°F]	• The fuel temperature (determined by the signal voltage of the fuel tank temperature sensor) is displayed.	
INT/A TEMP SE [°C] or [°F]	• The intake air temperature (determined by the signal voltage of the intake air temperature sensor) is indicated.	
EVAP SYS PRES [V]	• The signal voltage of EVAP control system pressure sensor is displayed.	
FUEL LEVEL SE [V]	• The signal voltage of the fuel level sensor is displayed.	
START SIGNAL [ON/OFF]	• Indicates start signal status [ON/OFF] computed by the ECM according to the signals of engine speed and battery voltage.	• After starting the engine, [OFF] is displayed regardless of the starter signal.
CLSD THL POS [ON/OFF]	• Indicates idle position [ON/OFF] computed by the ECM according to the accelerator pedal position sensor signal.	
AIR COND SIG [ON/OFF]	• Indicates [ON/OFF] condition of the air conditioner switch as determined by the air conditioner signal.	
P/N POSI SW [ON/OFF]	• Indicates [ON/OFF] condition from the park/neutral position (PNP) signal.	
PW/ST SIGNAL [ON/OFF]	• [ON/OFF] condition of the power steering system (determined by the signal sent from EPS control unit) is indicated.	
LOAD SIGNAL [ON/OFF]	• Indicates [ON/OFF] condition from the electrical load signal. ON: Rear window defogger switch is ON and/or lighting switch is in 2nd position. OFF: Both rear window defogger switch and lighting switch are OFF.	
IGNITION SW [ON/OFF]	• Indicates [ON/OFF] condition from ignition switch.	
HEATER FAN SW [ON/OFF]	• Indicates [ON/OFF] condition from the heater fan switch signal.	
BRAKE SW [ON/OFF]	• Indicates [ON/OFF] condition from the stop lamp switch signal.	
INJ PULSE-B1 [msec]	• Indicates the actual fuel injection pulse width compensated by ECM according to the input signals.	• When the engine is stopped, a certain computed value is indicated.
IGN TIMING [BTDC]	• Indicates the ignition timing computed by ECM according to the input signals.	• When the engine is stopped, a certain value is indicated.
CAL/LD VALUE [%]	• “Calculated load value” indicates the value of the current airflow divided by peak airflow.	

Monitored item [Unit]	Description	Remarks
MASS AIRFLOW [g·m/s]	• Indicates the mass airflow computed by ECM according to the signal voltage of the mass air flow sensor.	
PURG VOL C/V [%]	• Indicates the EVAP canister purge volume control solenoid valve control value computed by the ECM according to the input signals. • The opening becomes larger as the value increases.	
INT/V TIM (B1) [°CA]	• Indicates [°CA] of intake camshaft advanced angle.	
INT/V SOL (B1) [%]	• The control value of the intake valve timing control solenoid valve (determined by ECM according to the input signal) is indicated. • The advance angle becomes larger as the value increases	
AIR COND RLY [ON/OFF]	• The air conditioner relay control condition (determined by ECM according to the input signals) is indicated.	
FUEL PUMP RLY [ON/OFF]	• Indicates the fuel pump relay control condition determined by ECM according to the input signals.	
VENT CONT/V [ON/OFF]	• The control condition of the EVAP canister vent control valve (determined by ECM according to the input signals) is indicated. ON: Closed OFF: Open	
THRTL RELAY [ON/OFF]	• Indicates the throttle control motor relay control condition determined by the ECM according to the input signals.	
COOLING FAN [HI/MID/LOW/OFF]	• Indicates the condition of the cooling fan (determined by ECM according to the input signals). HI: High speed operation MID: Middle speed operation LOW: Low speed operation OFF: Stop	
HO2S2 HTR (B1) [ON/OFF]	• Indicates [ON/OFF] condition of heated oxygen sensor 2 heater determined by ECM according to the input signals.	
I/P PULLY SPD [rpm]	• Indicates the engine speed computed from the input speed sensor signal.	
VEHICLE SPEED [km/h] or [mph]	• The vehicle speed computed from the vehicle speed signal sent from TCM is displayed.	
IDL A/V LEARN [YET/CMPLT]	• Display the condition of idle air volume learning YET: Idle Air Volume Learning has not been performed yet. CMPLT: Idle Air Volume Learning has already been performed successfully.	
TRVL AFTER MIL [km] or [mile]	• Distance traveled while MIL is activated.	
A/F S1 HTR (B1) [%]	• Indicates A/F sensor 1 heater control value computed by ECM according to the input signals. • The current flow to the heater becomes larger as the value increases.	
AC PRESS SEN [V]	• The signal voltage from the refrigerant pressure sensor is displayed.	
VHCL SPEED SE [km/h] or [mph]	• The vehicle speed computed from the vehicle speed signal sent from TCM is displayed.	
SET VHCL SPD [km/h] or [mph]	• The preset vehicle speed is displayed.	
MAIN SW [ON/OFF]	• Indicates [ON/OFF] condition from MAIN switch signal.	

Monitored item [Unit]	Description	Remarks
CANCEL SW [ON/OFF]	• Indicates [ON/OFF] condition from CANCEL switch signal.	
RESUME/ACC SW [ON/OFF]	• Indicates [ON/OFF] condition from RESUME/ACCELERATE switch signal.	
SET SW [ON/OFF]	• Indicates [ON/OFF] condition from SET/COAST switch signal.	
BRAKE SW1 [ON/OFF]	• Indicates [ON/OFF] condition from ASCD brake switch signal.	
BRAKE SW2 [ON/OFF]	• Indicates [ON/OFF] condition of stop lamp switch signal.	
VHCL SPD CUT [NON/CUT]	• Indicates the vehicle cruise condition. NON: Vehicle speed is maintained at the ASCD set speed. CUT: Vehicle speed increased to excessively high compared with the ASCD set speed, and ASCD operation is cut off.	
LO SPEED CUT [NON/CUT]	• Indicates the vehicle cruise condition. NON: Vehicle speed is maintained at the ASCD set speed. CUT: Vehicle speed decreased to excessively low compared with the ASCD set speed, and ASCD operation is cut off.	
AT OD MONITOR [ON/OFF]	• Indicates [ON/OFF] condition of CVT according to the input signal from the TCM.	• For M/T models always “OFF” is displayed
AT OD CANCEL [ON/OFF]	• Indicates [ON/OFF] condition of CVT cancel signal sent from the TCM.	• For M/T models always “OFF” is displayed
CRUISE LAMP [ON/OFF]	• Indicates [ON/OFF] condition of CRUISE lamp determined by the ECM according to the input signals.	
SET LAMP [ON/OFF]	• Indicates [ON/OFF] condition of SET lamp determined by the ECM according to the input signals.	
A/F ADJ-B1	• Indicates the correction factor stored in ECM. The factor is calculated from the difference between the target air/fuel ratio stored in ECM and the air/fuel ratio calculated from air fuel ratio (A/F) sensor 1 signal.	
SWRL CONT S/V [ON/OFF]	• The control condition of the tumble control valve (determined by ECM according to the input signals) is indicated. ON: Closed OFF: Open	
TUMBLE POS SEN [V]	• The tumble control valve position sensor signal voltage is displayed.	
ENG OIL TEMP [°C] or [°F]	• The engine oil temperature (determined by the signal voltage of the engine oil temperature sensor) is displayed.	
HO2 S2 DIAG1 (B1) [INCMP/CMPLT]	• Indicates DTC P0139 self-diagnosis (delayed response) condition. INCMP: Self-diagnosis is incomplete. CMPLT: Self-diagnosis is complete.	
HO2 S2 DIAG2 (B1) [INCMP/CMPLT]	• Indicates DTC P0139 self-diagnosis (slow response) condition. INCMP: Self-diagnosis is incomplete. CMPLT: Self-diagnosis is complete.	

NOTE:

Any monitored item that does not match the vehicle being diagnosed is deleted from the display automatically.

ACTIVE TEST MODE

Test Item

Test Item	Condition	Judgment	Check Item (Remedy)
FUEL INJECTION	• Engine: Return to the original trouble condition • Change the amount of fuel injection using CONSULT-III.	If trouble symptom disappears, see CHECK ITEM.	• Harness and connectors • Fuel injector • Air fuel ratio (A/F) sensor 1
IGNITION TIMING	• Engine: Return to the original trouble condition • Timing light: Set • Retard the ignition timing using CONSULT-III.	If trouble symptom disappears, see CHECK ITEM.	• Perform Idle Air Volume Learning.
POWER BALANCE	• Engine: After warming up, idle the engine. • A/C switch OFF • Shift lever: P or N (CVT), Neutral (M/T) • Cut off each fuel injector signal one at a time using CONSULT-III.	Engine runs rough or dies.	• Harness and connectors • Compression • Fuel injector • Power transistor • Spark plug • Ignition coil
COOLING FAN*	• Ignition switch: ON • Turn the cooling fan “LOW”, “MID”, “HI” and “OFF” with CONSULT-III.	Cooling fan moves and stops.	• Harness and connectors • Cooling fan relay • Cooling fan motor
ENG COOLANT TEMP	• Engine: Return to the original trouble condition • Change the engine coolant temperature using CONSULT-III.	If trouble symptom disappears, see CHECK ITEM.	• Harness and connectors • Engine coolant temperature sensor • Fuel injector
FUEL PUMP RELAY	• Ignition switch: ON (Engine stopped) • Turn the fuel pump relay “ON” and “OFF” using CONSULT-III and listen to operating sound.	Fuel pump relay makes the operating sound.	• Harness and connectors • Fuel pump relay
PURG VOL CONT/V	• Engine: After warming up, run engine at 1,500 rpm. • Change the EVAP canister purge volume control solenoid valve opening percent using CONSULT-III.	Engine speed changes according to the opening percent.	• Harness and connectors • EVAP canister purge volume control solenoid valve
FUEL/T TEMP SEN	• Change the fuel tank temperature using CONSULT-III.		
VENT CONTROL/V	• Ignition switch: ON (Engine stopped) • Turn solenoid valve “ON” and “OFF” with the CONSULT-III and listen to operating sound.	Solenoid valve makes an operating sound.	• Harness and connectors • EVAP canister vent control valve
V/T ASSIGN ANGLE	• Engine: Return to the original trouble condition • Change intake valve timing using CONSULT-III.	If trouble symptom disappears, see CHECK ITEM.	• Harness and connectors • Intake valve timing control solenoid valve
TUMBLE CONTROL VALVE	• Ignition switch: ON • Turn tumble control valve "ON" and "OFF" with CONSULT-III and listen to operating sound.	Tumble control valve motor makes an operating sound.	• Harness and connectors • Tumble control valve motor

*: Leaving cooling fan OFF with CONSULT-III while engine is running may cause the engine to overheat.

DTC & SRT CONFIRMATION MODE

SRT STATUS Mode

For details, refer to EC-62, "Emission-related Diagnostic Information".

PERMANENT DTC STATUS Mode

For details, refer to EC-62, "Emission-related Diagnostic Information".

NOTE:
This mode is not used in regions that permanent DTCs are not regulated by law.

SRT WORK SUPPORT Mode
This mode enables a technician to drive a vehicle to set the SRT while monitoring the SRT status.

PERMANENT DTC WORK SUPPORT Mode
This mode enables a technician to drive a vehicle to complete the driving pattern that is reguired for erasing permanent DTC.

NOTE:
This mode is not used in regions that permanent DTCs are not regulated by law.

DTC WORK SUPPORT Mode

Test mode	Test item	Corresponding DTC No.	Reference page
EVAPORATIVE SYSTEM	PURG FLOW P0441	P0441	EC-335
	EVP SML LEAK P0442/P1442*	P0442	EC-340
		P0455	EC-391
	EVP V/S LEAK P0456/P1456*	P0456	EC-398
	PURG VOL CN/V P1444	P0443	EC-347
A/F SEN1	A/F SEN1 (B1) P1276	P0130	EC-225
	A/F SEN1 (B1) P1278/P1279	P0133	EC-243
HO2S2	HO2S2 (B1) P0139	P0139	EC-266
	HO2S2 (B1) P1146	P0138	EC-257
	HO2S2 (B1) P1147	P0137	EC-250

*: DTC P1442 and P1456 does not apply to B16 models but appears in DTC Work Support Mode screens.

Generic Scan Tool (GST) Function

INFOID:0000000005284579

DESCRIPTION

Generic Scan Tool (OBDII scan tool) complying with SAE J1978/ISO 15031-4 has 8 different functions explained below.
ISO15765-4 is used as the protocol.
The name GST or Generic Scan Tool is used in this service manual.

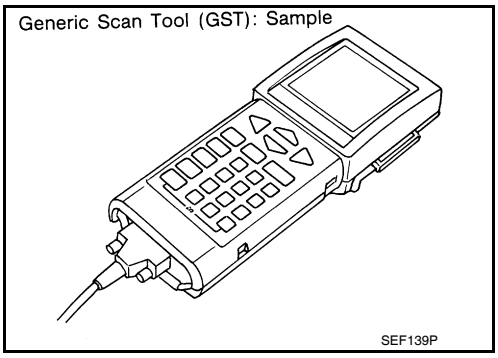

FUNCTION

Diagnostic test mode		Function
Service $01	READINESS TESTS	This diagnostic service gains access to current emission-related data values, including analog inputs and outputs, digital inputs and outputs, and system status information.
Service $02	(FREEZE DATA)	This diagnostic service gains access to emission-related data value which were stored by ECM during the freeze frame. For details, refer to EC-131, "CONSULT-III Function (ENGINE)".
Service $03	DTCs	This diagnostic service gains access to emission-related power train trouble codes which were stored by ECM.

Diagnostic test mode		Function
Service $04	CLEAR DIAG INFO	This diagnostic service can clear all emission-related diagnostic information. This includes: • Clear number of diagnostic trouble codes (Service $01) • Clear diagnostic trouble codes (Service $03) • Clear trouble code for freeze frame data (Service $01) • Clear freeze frame data (Service $02) • Reset status of system monitoring test (Service $01) • Clear on board monitoring test results (Service $06 and $07)
Service $06	(ON BOARD TESTS)	This diagnostic service accesses the results of on board diagnostic monitoring tests of specific components/systems that are not continuously monitored.
Service $07	(ON BOARD TESTS)	This diagnostic service enables the off board test drive to obtain test results for emission-related powertrain components/systems that are continuously monitored during normal driving conditions.
Service $08	—	This diagnostic service can close EVAP system in ignition switch ON position (Engine stopped). When this diagnostic service is performed, EVAP canister vent control valve can be closed. In the following conditions, this diagnostic service cannot function. • Low ambient temperature • Low battery voltage • Engine running • Ignition switch OFF • Low fuel temperature • Too much pressure is applied to EVAP system
Service $09	(CALIBRATION ID)	This diagnostic service enables the off-board test device to request specific vehicle information such as Vehicle Identification Number (VIN) and Calibration IDs.
Service $0A*	PERMANENT DTCs	This diagnostic service gains access to permanent DTCs which were stored by ECM.

NOTE:

*: Service $0A is not applied for regions where it is not mandated.

INSPECTION PROCEDURE

1. Turn ignition switch OFF.
2. Connect GST to data link connector (1).
   • Accelerator pedal (2)

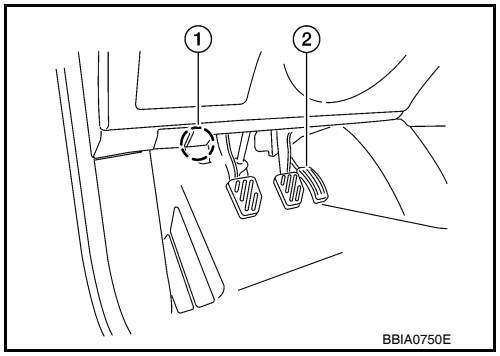

3. Turn ignition switch ON.
4. Enter the program according to instruction on the screen or in the operation manual.
   (*: Regarding GST screens in this section, sample screens are shown.)

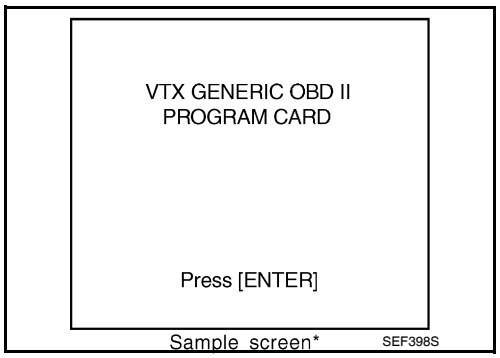

5. Perform each diagnostic service according to each service procedure.
For further information, see the GST Operation Manual of the tool maker.

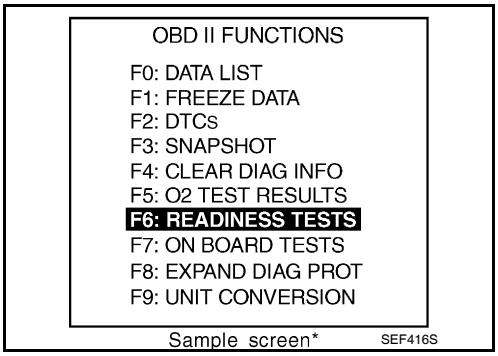

CONSULT-III Reference Value in Data Monitor

INFOID:0000000005284580

Remarks:
- Specification data are reference values.
- Specification data are output/input values which are detected or supplied by the ECM at the connector.
  * Specification data may not be directly related to their components signals/values/operations.
  i.e. Adjust ignition timing with a timing light before monitoring IGN TIMING, because the monitor may show the specification data in spite of the ignition timing not being adjusted to the specification data. This IGN TIMING monitors the data calculated by the ECM according to the signals input from the camshaft position sensor and other ignition timing related sensors.

Monitor Item	Condition		Specification
ENG SPEED	• Run engine and compare CONSULT-III value with the tachometer indication.		Almost the same speed as the tachometer indication.
MAS A/F SE-B1	See EC-144.		
B/FUEL SCHDL	See EC-144.		
A/F ALPHA-B1	See EC-144.		
COOLAN TEMP/S	• Engine: After warming up		More than 70°C (158°F)
A/F SEN1 (B1)	• Engine: After warming up	Maintaining engine speed at 2,000 rpm	Fluctuates around 2.2 V
HO2S2 (B1)	• Revving engine from idle to 3,000 rpm quickly after the following conditions are met - Engine: After warming up - Keeping the engine speed between 3,500 and 4,000 rpm for 1 minute and at idle for 1 minute under no load		0 - 0.3 V ←→ Approx. 0.6 - 1.0 V
HO2S2 MNTR (B1)			LEAN ←→ RICH
VHCL SPEED SE	• Turn drive wheels and compare CONSULT-III value with the speedometer indication.		Almost the same speed as the speedometer indication.
BATTERY VOLT	• Ignition switch: ON (Engine stopped)		11 - 14 V
ACCEL SEN 1 ACCEL SEN 2*	• Ignition switch: ON (Engine stopped)	Accelerator pedal: Fully released	0.6 - 0.9 V
		Accelerator pedal: Fully depressed	4.0 - 4.8 V
EVAP SYS PRES	• Ignition switch: ON		Approx. 1.8 - 4.8 V
TP SEN 1-B1 TP SEN 2-B1*	• Ignition switch: ON (Engine stopped)	Accelerator pedal: Fully released	More than 0.36 V
	• Shift lever: D (CVT), 1st (M/T)	Accelerator pedal: Fully depressed	Less than 4.75 V
START SIGNAL	• Ignition switch: ON → START → ON		OFF → ON → OFF
CLSD THL POS	• Ignition switch: ON	Accelerator pedal: Fully released	ON
		Accelerator pedal: Slightly depressed	OFF
AIR COND SIG	• Engine: After warming up, idle the engine	Air conditioner switch: OFF	OFF
		Air conditioner switch: ON (Compressor operates.)	ON
P/N POSI SW	• Ignition switch: ON	Shift lever: P or N (CVT), Neutral (M/T)	ON
		Shift lever: Except above	OFF

Monitor Item	Condition		Specification
PW/ST SIGNAL	• Engine: After warming up, idle the engine	Steering wheel: Not being turned	OFF
		Steering wheel: Being turned	ON
LOAD SIGNAL	• Ignition switch: ON	Rear window defogger switch: ON and/or Lighting switch: 2nd	ON
		Rear window defogger switch and lighting switch: OFF	OFF
IGNITION SW	• Ignition switch: ON → OFF → ON		ON → OFF → ON
HEATER FAN SW	• Ignition switch: ON	Heater fan: Operating	ON
		Heater fan: Not operating	OFF
BRAKE SW	• Ignition switch: ON	Brake pedal: Fully released	OFF
		Brake pedal: Slightly depressed	ON
INJ PULSE-B1	• Engine: After warming up • Air conditioner switch: OFF • Shift lever: P or N (CVT), Neutral (M/T) • No load	Idle	2.0 - 3.0 msec
		2,000 rpm	1.9 - 2.9 msec
IGN TIMING	• Engine: After warming up • Air conditioner switch: OFF • Shift lever: P or N (CVT), Neutral (M/T) • No load	Idle	1° - 11° BTDC
		2,000 rpm	25° - 45° BTDC
CAL/LD VALUE	• Engine: After warming up • Air conditioner switch: OFF • Shift lever: P or N (CVT), Neutral (M/T) • No load	Idle	10% - 35%
		2,500 rpm	10% - 35%
MASS AIRFLOW	• Engine: After warming up • Air conditioner switch: OFF • Shift lever: P or N (CVT), Neutral (M/T) • No load	Idle	1.0 - 4.0 g·m/s
		2,500 rpm	2.0 - 10.0 g·m/s
PURG VOL C/V	• Engine: After warming up • Air conditioner switch: OFF • Shift lever: P or N (CVT), Neutral (M/T) • No load	Idle (Accelerator pedal is not depressed even slightly, after engine starting)	0%
		2,000 rpm	0 - 50%
INT/V TIM (B1)	• Engine: After warming up • Air conditioner switch: OFF • Shift lever: P or N (CVT), Neutral (M/T) • No load	Idle	–5° - 5°CA
		When revving engine up to 2,000 rpm quickly	Approx. 0° - 40°CA
INT/V SOL (B1)	• Engine: After warming up • Air conditioner switch: OFF • Shift lever: P or N (CVT), Neutral (M/T) • No load	Idle	0% - 2%
		When revving engine up to 2,000 rpm quickly	Approx. 0% - 90%
AIR COND RLY	• Engine: After warming up, idle the engine	Air conditioner switch: OFF	OFF
		Air conditioner switch: ON (Compressor operates)	ON
FUEL PUMP RLY	• For 1 second after turning ignition switch ON • Engine running or cranking		ON
	• Except above conditions		OFF
VENT CONT/V	• Ignition switch: ON		OFF
THRTL RELAY	• Ignition switch: ON		ON

Monitor Item	Condition		Specification
COOLING FAN	• Engine: After warming up, idle the engine • Air conditioner switch: OFF	Engine coolant temperature: 97°C (207°F) or less	OFF
		Engine coolant temperature: Between 98°C (208°F) and 99°C (210°F)	LOW
		Engine coolant temperature: Between 100°C (212°F) and 104°C (219°F)	MIDDLE
		Engine coolant temperature: 105°C (221°F) or more	HIGH
HO2S2 HTR (B1)	• Below 3,600 rpm after the following conditions are met. - Engine: After warming up - Keeping the engine speed between 3,500 and 4,000 rpm for 1 minute and at idle for 1 minute under no load		ON
	• Engine speed: Above 3,600 rpm		OFF
I/P PULLY SPD	• Vehicle speed: More than 20 km/h (12 MPH)		Almost the same speed as the tachometer indication
VEHICLE SPEED	• Turn drive wheels and compare CONSULT-III value with the speedometer indication.		Almost the same speed as the speedometer indication
TRVL AFTER MIL	• Ignition switch: ON	Vehicle has traveled after MIL has turned ON.	0 - 65,535 km (0 - 40,723 mile)
A/F S1 HTR (B1)	• Engine: After warming up, idle the engine (More than 140 seconds after starting engine)		4 - 100%
AC PRESS SEN	• Engine: Idle • Air conditioner switch: ON (Compressor operates)		1.0 - 4.0 V
VHCL SPEED SE	• Turn drive wheels and compare speedometer indication with the CONSULT-III value.		Almost the same speed as the speedometer indication
SET VHCL SPD	• Engine: Running	ASCD: Operating	The preset vehicle speed is displayed.
MAIN SW	• Ignition switch: ON	MAIN switch: Pressed	ON
		MAIN switch: Released	OFF
CANCEL SW	• Ignition switch: ON	CANCEL switch: Pressed	ON
		CANCEL switch: Released	OFF
RESUME/ACC SW	• Ignition switch: ON	RESUME/ACCELERATE switch: Pressed	ON
		RESUME/ACCELERATE switch: Released	OFF
SET SW	• Ignition switch: ON	SET/COAST switch: Pressed	ON
		SET/COAST switch: Released	OFF
BRAKE SW1	• Ignition switch: ON	• Brake pedal: Fully released (CVT) • Brake pedal and clutch pedal: Fully released (M/T)	ON
		• Brake pedal: Slightly depressed (CVT) • Brake pedal and/or clutch pedal: Slightly depressed (M/T)	OFF
BRAKE SW2	• Ignition switch: ON	Brake pedal: Fully released	OFF
		Brake pedal: Slightly depressed	ON
CRUISE LAMP	• Ignition switch: ON	MAIN switch: Pressed at the 1st time → at the 2nd time	ON → OFF
SET LAMP	• MAIN switch: ON • Vehicle speed: Between 40 km/h (25 MPH) and 144 km/h (89 MPH)	ACSD: Operating	ON
		ASCD: Not operating	OFF
A/F ADJ-B1	• Engine: Running		–0.330 – 0.330

Monitor Item	Condition		Specification
SWRL CONT S/V	• Engine coolant temperature: Between 5°C (41°F) and 45°C (113°F) • Engine speed: Less than 3,200 rpm	Accelerator pedal: Fully released	ON
		Accelerator pedal: Slightly depressed	OFF
TUMBLE POS SEN	• Engine coolant temperature: Between 5°C (41°F) and 45°C (113°F) • Engine speed: Less than 3,200 rpm	Accelerator pedal: Fully released	Less than 1.2 V
		Accelerator pedal: Slightly depressed	More than 2.9 V
ENG OIL TEMP	• Engine: After warming up		More than 70°C (158°F)
HO2 S2 DIAG1 (B1)	DTC P0139 self-diagnosis (delayed response) is incomplete.		INCMP
	DTC P0139 self-diagnosis (delayed response) is complete.		CMPLT
HO2 S2 DIAG2 (B1)	DTC P0139 self-diagnosis (slow response) is incomplete.		INCMP
	DTC P0139 self-diagnosis (slow response) is complete.		CMPLT

*: Accelerator pedal position sensor 2 signal and throttle position sensor 2 signal are converted by ECM internally. Thus, they differ from ECM terminals voltage signal.

TROUBLE DIAGNOSIS - SPECIFICATION VALUE

Description

INFOID:0000000005284581

The specification (SP) value indicates the tolerance of the value that is displayed in “SPEC” of “DATA MONITOR” mode with CONSULT-III during normal operation of the Engine Control System. When the value in “SPEC” of “DATA MONITOR” mode is within the SP value, the Engine Control System is confirmed OK. When the value in “SPEC” of “DATA MONITOR” mode is NOT within the SP value, the Engine Control System may have one or more malfunctions.
The SP value is used to detect malfunctions that may affect the Engine Control System, but will not light the MIL.
The SP value will be displayed for the following three items:
- B/FUEL SCHDL (The fuel injection pulse width programmed into ECMprior to any learned on board correction)
- A/F ALPHA-B1 (The mean value of air-fuel ratio feedback correction factor per cycle)
- MAS A/F SE-B1 (The signal voltage of the mass air flow sensor)

Testing Condition

INFOID:0000000005284582

- Vehicle driven distance: More than 5,000 km (3,107 miles)
- Barometric pressure: 98.3 - 104.3 kPa (1.003 - 1.064 kg/cm^2, 14.25 - 15.12 psi)
- Atmospheric temperature: 20 - 30°C (68 - 86°F)
- Engine coolant temperature: 75 - 95°C (167 - 203°F)
- Transmission: Warmed-up
  - CVT models: After the engine is warmed up to normal operating temperature, drive vehicle until “ATF TEMP SEN” (fluid temperature sensor signal) indicates less than 0.9V.
  - M/T models: After the engine is warmed up to normal operating temperature, drive vehicle for 5 minutes.
- Electrical load: Not applied
  - Rear window defogger switch, air conditioner switch, lighting switch are OFF. Steering wheel is straight ahead.
- Engine speed: Idle

Inspection Procedure

INFOID:0000000005284583

NOTE:
Perform “SPEC” in “DATA MONITOR” mode in maximum scale display.

1. Perform EC-93, "Basic Inspection".
2. Confirm that the testing conditions indicated above are met.
3. Select “B/FUEL SCHDL”, “A/F ALPHA-B1” and “MAS A/F SE-B1” in “SPEC” of “DATA MONITOR” mode with CONSULT-III.
4. Make sure that monitor items are within the SP value.
5. If NG, go to EC-144, "Diagnosis Procedure".

Diagnosis Procedure

INFOID:0000000005284584

OVERALL SEQUENCE

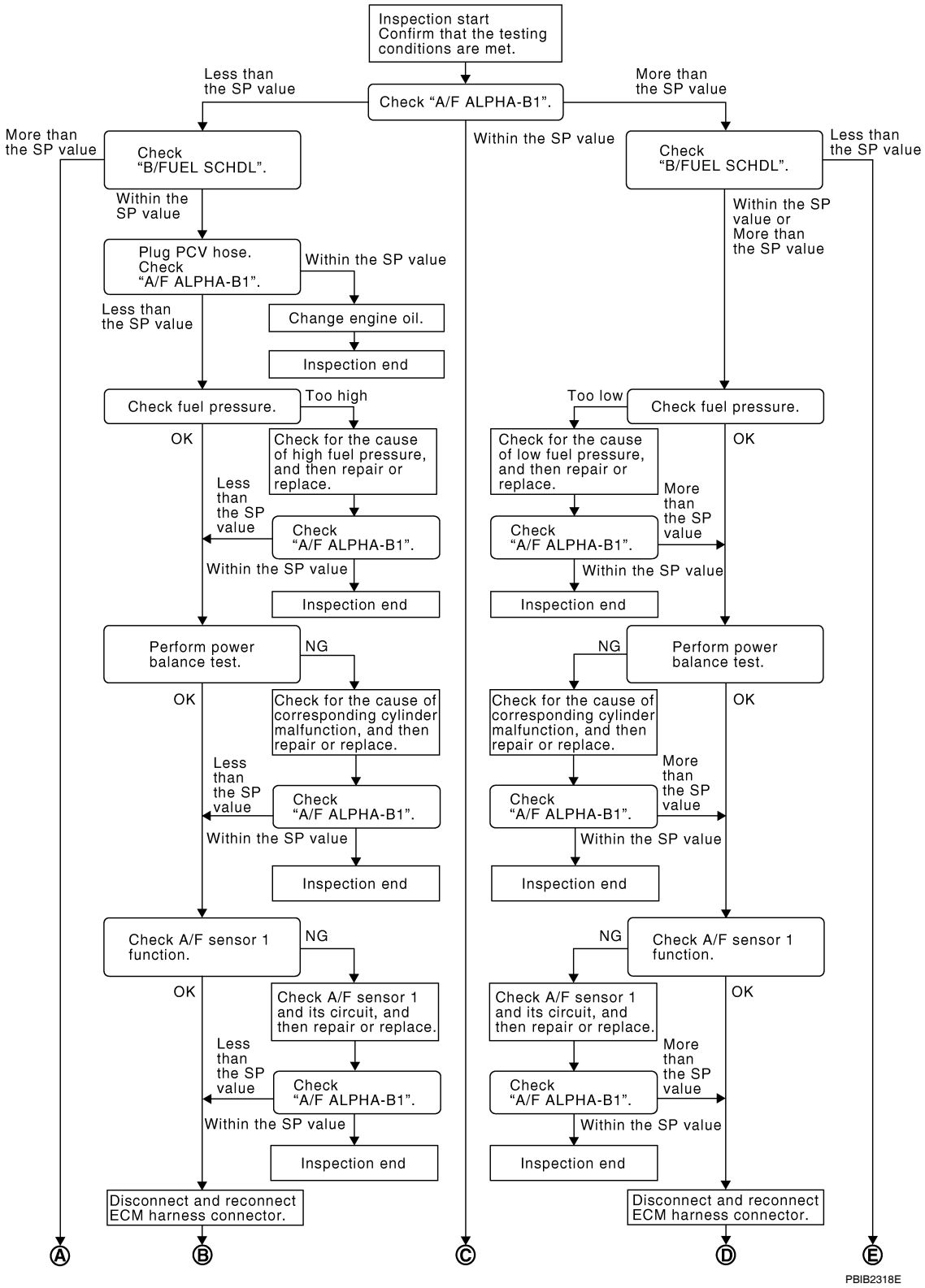
Inspection start
Confirm that the testing conditions are met.
Check "A/F ALPHA-B1".
Less than the SP value
More than the SP value
Within the SP value
Check "B/FUEL SCHDL".
More than the SP value
Less than the SP value
Within the SP value
Plug PCV hose. Check "A/F ALPHA-B1".
Within the SP value
Change engine oil.
Inspection end
Less than the SP value
Check fuel pressure.
Too high
Check for the cause of high fuel pressure, and then repair or replace.
Check "A/F ALPHA-B1".
Less than the SP value
Within the SP value
Inspection end
OK
Perform power balance test.
NG
Check for the cause of corresponding cylinder malfunction, and then repair or replace.
Check "A/F ALPHA-B1".
Less than the SP value
Within the SP value
Inspection end
OK
Check A/F sensor 1 function.
NG
Check A/F sensor 1 and its circuit, and then repair or replace.
Check "A/F ALPHA-B1".
Less than the SP value
Within the SP value
Inspection end
OK
Disconnect and reconnect ECM harness connector.
Check "B/FUEL SCHDL".
Less than the SP value
Within the SP value or More than the SP value
Check fuel pressure.
Too low
Check for the cause of low fuel pressure, and then repair or replace.
Check "A/F ALPHA-B1".
More than the SP value
Within the SP value
Inspection end
OK
Perform power balance test.
NG
Check for the cause of corresponding cylinder malfunction, and then repair or replace.
Check "A/F ALPHA-B1".
More than the SP value
Within the SP value
Inspection end
OK
Check A/F sensor 1 function.
NG
Check A/F sensor 1 and its circuit, and then repair or replace.
Check "A/F ALPHA-B1".
More than the SP value
Within the SP value
Inspection end
OK
Disconnect and reconnect ECM harness connector.
A
B
C
D
E
PBIB2318E

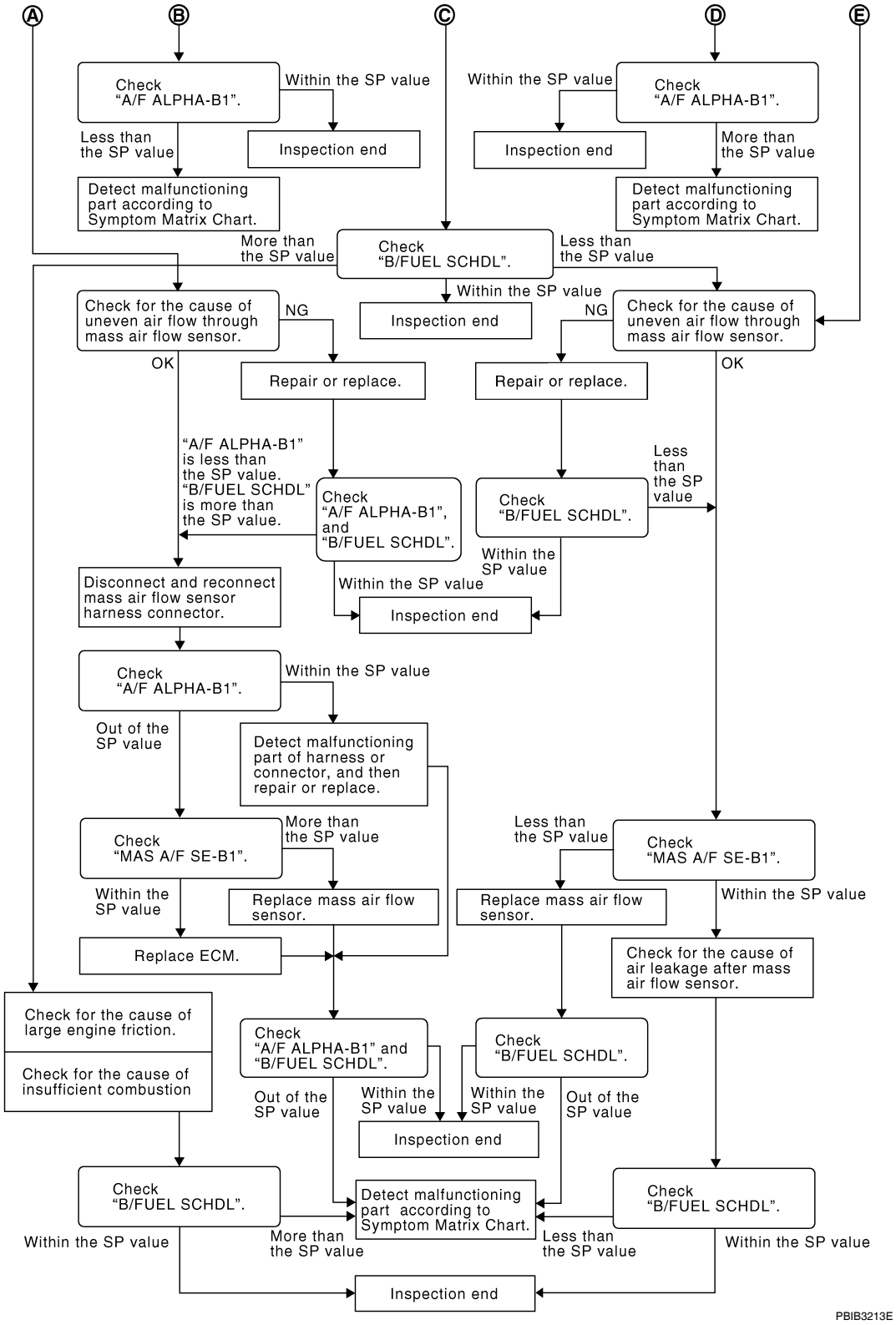

DETAILED PROCEDURE

1. CHECK "A/F ALPHA-B1"

1. Start engine.
2. Confirm that the testing conditions are met. Refer to EC-144, "Testing Condition".
3. Select "A/F ALPHA-B1" in "SPEC" of "DATA MONITOR" mode, and make sure that the indication is within the SP value.

   NOTE:

Check “A/F ALPHA-B1” for approximately 1 minute because they may fluctuate. It is NG if the indication is out of the SP value even a little.

OK or NG

OK >> GO TO 17.
NG (Less than the SP value)>>GO TO 2.
NG (More than the SP value)>>GO TO 3.

2. CHECK “B/FUEL SCHDL”

Select “B/FUEL SCHDL” in “SPEC” of “DATA MONITOR” mode, and make sure that the indication is within the SP value.

OK or NG

OK >> GO TO 4.
NG (More than the SP value)>>GO TO 19.

3. CHECK “B/FUEL SCHDL”

Select “B/FUEL SCHDL” in “SPEC” of “DATA MONITOR” mode, and make sure that the indication is within the SP value.

OK or NG

OK >> GO TO 6.
NG (More than the SP value)>>GO TO 6.
NG (Less than the SP value)>>GO TO 25.

4. CHECK “A/F ALPHA-B1”

1. Stop the engine.
2. Disconnect PCV hose, and then plug it.
3. Start engine.
4. Select “A/F ALPHA-B1” in “SPEC” of “DATA MONITOR” mode, and make sure that the indication is within the SP value.

OK or NG

OK >> GO TO 5.
NG >> GO TO 6.

5. CHANGE ENGINE OIL

1. Stop the engine.
2. Change engine oil. Refer to MA-24, "ENGINE OIL : Changing Engine Oil".
   NOTE:
   This symptom may occur when a large amount of gasoline is mixed with engine oil because of driving conditions (such as when engine oil temperature does not rise enough since a journey distance is too short during winter). The symptom will not be detected after changing engine oil or changing driving condition.

>> **INSPECTION END**

6. CHECK FUEL PRESSURE

Check fuel pressure. (Refer to EC-101, "Fuel Pressure Check".)

OK or NG

OK >> GO TO 9.
NG (Fuel pressure is too high)>>Replace fuel pressure regulator, refer to EC-101, "Fuel Pressure Check". GO TO 8.
NG (Fuel pressure is too low)>>GO TO 7.

7. DETECT MALFUNCTIONING PART

1. Check the following.
- Clogged and bent fuel hose and fuel tube
- Clogged fuel filter
- Fuel pump and its circuit (Refer to EC-556.)
2. If NG, repair or replace the malfunctioning part. (Refer to EC-101, "Fuel Pressure Check".)
   If OK, replace fuel pressure regulator.

>> GO TO 8.

8. CHECK “A/F ALPHA-B1”

1. Start engine.
2. Select “A/F ALPHA-B1” in “SPEC” of “DATA MONITOR” mode, and make sure that the indication is within the SP value.

OK or NG

OK >> **INSPECTION END**
NG >> GO TO 9.

9. PERFORM POWER BALANCE TEST

1. Perform “POWER BALANCE” in “ACTIVE TEST” mode.
2. Make sure that the each cylinder produces a momentary engine speed drop.

OK or NG

OK >> GO TO 12.
NG >> GO TO 10.

10. DETECT MALFUNCTIONING PART

1. Check the following.
- Ignition coil and its circuit (Refer to EC-561.)
- Fuel injector and its circuit (Refer to EC-551.)
- Intake air leakage
- Low compression pressure (Refer to EM-65, "On-Vehicle Service".)
2. If NG, repair or replace the malfunctioning part.
   If OK, replace fuel injector. (It may be caused by leakage from fuel injector or clogging.)

>> GO TO 11.

11. CHECK “A/F ALPHA-B1”

1. Start engine.
2. Select “A/F ALPHA-B1” in “SPEC” of “DATA MONITOR” mode, and make sure that the indication is within the SP value.

OK or NG

OK >> **INSPECTION END**
NG >> GO TO 12.

12. CHECK A/F SENSOR 1 FUNCTION

Perform all DTC Confirmation Procedure related with A/F sensor 1.
- For DTC P0130, refer to EC-225, "DTC Confirmation Procedure".
- For DTC P0131, refer to EC-231, "DTC Confirmation Procedure".
- For DTC P0132, refer to EC-237, "DTC Confirmation Procedure".
- For DTC P0133, refer to EC-243, "DTC Confirmation Procedure".
- For DTC P2A00, refer to EC-531, "DTC Confirmation Procedure".

OK or NG

OK >> GO TO 15.
NG >> GO TO 13.

13. CHECK A/F SENSOR 1 CIRCUIT

Perform Diagnostic Procedure according to corresponding DTC.

>> GO TO 14.

14. CHECK “A/F ALPHA-B1”

1. Start engine.
2. Select “A/F ALPHA-B1” in “SPEC” of “DATA MONITOR” mode, and make sure that the indication is within the SP value.

OK or NG

OK >> **INSPECTION END**
NG >> GO TO 15.

15. DISCONNECT AND RECONNECT ECM HARNESS CONNECTOR

1. Stop the engine.
2. Disconnect ECM harness connector. Check pin terminal and connector for damage, and then reconnect it.

>> GO TO 16.

16. CHECK “A/F ALPHA-B1”

1. Start engine.
2. Select “A/F ALPHA-B1” in “SPEC” of “DATA MONITOR” mode, and make sure that the indication is within the SP value.

OK or NG

OK >> **INSPECTION END**
NG >> Detect malfunctioning part according to EC-111, "Symptom Matrix Chart".

17. CHECK “B/FUEL SCHDL”

Select “B/FUEL SCHDL” in “SPEC” of “DATA MONITOR” mode, and make sure that the indication is within the SP value.

OK or NG

OK >> **INSPECTION END**
NG (More than the SP value)>>GO TO 18.
NG (Less than the SP value)>>GO TO 25.

18. DETECT MALFUNCTIONING PART

1. Check for the cause of large engine friction. Refer to the following.
- Engine oil level is too high
- Engine oil viscosity
- Belt tension of alternator, A/C compressor, etc. is excessive
- Noise from engine
- Noise from transmission, etc.
2. Check for the cause of insufficient combustion. Refer to the following.
- Valve clearance malfunction
- Intake valve timing control function malfunction
- Camshaft sprocket installation malfunction, etc.

>> Repair or replace malfunctioning part, and then GO TO 30.

19. CHECK INTAKE SYSTEM

Check for the cause of uneven air flow through mass air flow sensor. Refer to the following.
- Crushed air ducts
- Malfunctioning seal of air cleaner element
- Uneven dirt of air cleaner element
- Improper specification of intake air system

OK or NG

OK >> GO TO 21.
NG >> Repair or replace malfunctioning part, and then GO TO 20.

20. CHECK “A/F ALPHA-B1” AND “B/FUEL SCHDL”

Select “A/F ALPHA-B1” and “B/FUEL SCHDL” in “SPEC” of “DATA MONITOR” mode, and make sure that the each indication is within the SP value.

OK or NG

OK >> **INSPECTION END**
NG (“B/FUEL SCHDL” is more, “A/F ALPHA-B1” is less than the SP value)>>GO TO 21.

21. DISCONNECT AND RECONNECT MASS AIR FLOW SENSOR HARNESS CONNECTOR

1. Stop the engine.

2. Disconnect mass air flow sensor harness connector. Check pin terminal and connector for damage and then reconnect it again.

>> GO TO 22.

22. CHECK “A/F ALPHA-B1”

1. Start engine.
2. Select “A/F ALPHA-B1” in “SPEC” of “DATA MONITOR” mode, and make sure that the indication is within the SP value.

OK or NG

OK >> 1. Detect malfunctioning part of mass air flow sensor circuit and repair it. Refer to EC-185.
2. GO TO 29.

NG >> GO TO 23.

23. CHECK “MAS A/F SE-B1”

Select “MAS A/F SE-B1” in “SPEC” of “DATA MONITOR” mode, and make sure that the indication is within the SP value.

OK or NG

OK >> GO TO 24.

NG (More than the SP value)>>Replace mass air flow sensor, and then GO TO 29.

24. REPLACE ECM

1. Replace ECM.
2. Perform initialization of NVIS(NATS) system and registration of all NVIS(NATS) ignition key IDs. Refer to BL-171, "ECM Re-communicating Function".
3. Perform EC-99, "VIN Registration".
4. Perform EC-99, "Accelerator Pedal Released Position Learning".
5. Perform EC-99, "Throttle Valve Closed Position Learning".
6. Perform EC-99, "Idle Air Volume Learning".

>> GO TO 29.

25. CHECK INTAKE SYSTEM

Check for the cause of uneven air flow through mass air flow sensor. Refer to the following.

- Crushed air ducts
- Malfunctioning seal of air cleaner element
- Uneven dirt of air cleaner element
- Improper specification of intake air system

OK or NG

OK >> GO TO 27.

NG >> Repair or replace malfunctioning part, and then GO TO 26.

26. CHECK “B/FUEL SCHDL”

Select “B/FUEL SCHDL” in “SPEC” of “DATA MONITOR” mode, and make sure that the indication is within the SP value.

OK or NG

OK >> **INSPECTION END**

NG (Less than the SP value)>>GO TO 27.

27. CHECK “MAS A/F SE-B1”

Select “MAS A/F SE-B1” in “SPEC” of “DATA MONITOR” mode, and make sure that the indication is within the SP value.

OK or NG

OK >> GO TO 28.

NG (Less than the SP value)>>Replace mass air flow sensor, and then GO TO 30.

28. CHECK INTAKE SYSTEM

Check for the cause of air leak after the mass air flow sensor. Refer to the following.

- Disconnection, looseness, and cracks in air duct
- Looseness of oil filler cap
- Disconnection of oil level gauge
- Open stuck, breakage, hose disconnection, or cracks of PCV valve
- Disconnection or cracks of EVAP purge hose, open stuck of EVAP canister purge volume control solenoid valve
- Malfunctioning seal of rocker cover gasket
- Disconnection, looseness, or cracks of hoses, such as vacuum hose, connecting to intake air system parts
- Malfunctioning seal of intake air system, etc.

>> GO TO 30.

29. CHECK “A/F ALPHA-B1” AND “B/FUEL SCHDL”

Select “A/F ALPHA-B1” and “B/FUEL SCHDL” in “SPEC” of “DATA MONITOR” mode, and make sure that the each indication is within the SP value.

OK or NG

OK >> **INSPECTION END**
NG >> Detect malfunctioning part according to EC-111, "Symptom Matrix Chart".

30. CHECK “B/FUEL SCHDL”

Select “B/FUEL SCHDL” in “SPEC” of “DATA MONITOR” mode, and then make sure that the indication is within the SP value.

OK or NG

OK >> **INSPECTION END**
NG >> Detect malfunctioning part according to EC-111, "Symptom Matrix Chart".

TROUBLE DIAGNOSIS FOR INTERMITTENT INCIDENT

Description

INFOID:0000000005284585

Intermittent incidents may occur. In many cases, the malfunction resolves itself (the part or circuit function returns to normal without intervention). It is important to realize that the symptoms described in the customer's complaint often do not recur on (1st trip) DTC visits. Realize also that the most frequent cause of Intermittent Incidents occurrences is poor electrical connections. Because of this, the conditions under which the incident occurred may not be clear. Therefore, circuit checks made as part of the standard diagnostic procedure may not indicate the specific malfunctioning area.

Common Intermittent Incidents Report Situations

STEP in Work Flow	Situation
2	The CONSULT-III is used. The SELF-DIAG RESULTS screen shows time data other than 0 or [1t].
3 or 4	The symptom described by the customer does not recur.
5	(1st trip) DTC does not appear during the DTC Confirmation Procedure.
10	The Diagnostic Procedure for PXXXX does not indicate the malfunctioning area.

Diagnosis Procedure

INFOID:0000000005284586

1. INSPECTION START

Erase (1st trip) DTCs.
Refer to EC-62, "Emission-related Diagnostic Information".

>> GO TO 2.

2. CHECK GROUND TERMINALS

Check ground terminals for corroding or loose connection.
Refer to EC-157, "Ground Inspection".

OK or NG

OK >> GO TO 3.
NG >> Repair or replace.

3. SEARCH FOR ELECTRICAL INCIDENT

Perform GI-26, "How to Perform Efficient Diagnosis for an Electrical Incident", “INCIDENT SIMULATION TESTS”.

OK or NG

OK >> GO TO 4.
NG >> Repair or replace.

4. CHECK CONNECTOR TERMINALS

Refer to GI-23, "How to Check Terminal", “HOW TO PROBE CONNECTORS”, “How to Check Enlarged Contact Spring of Terminal”.

OK or NG

OK >> **INSPECTION END**
NG >> Repair or replace connector.

POWER SUPPLY AND GROUND CIRCUIT

Wiring Diagram

INFOID:0000000005284587

EC-MAIN-01

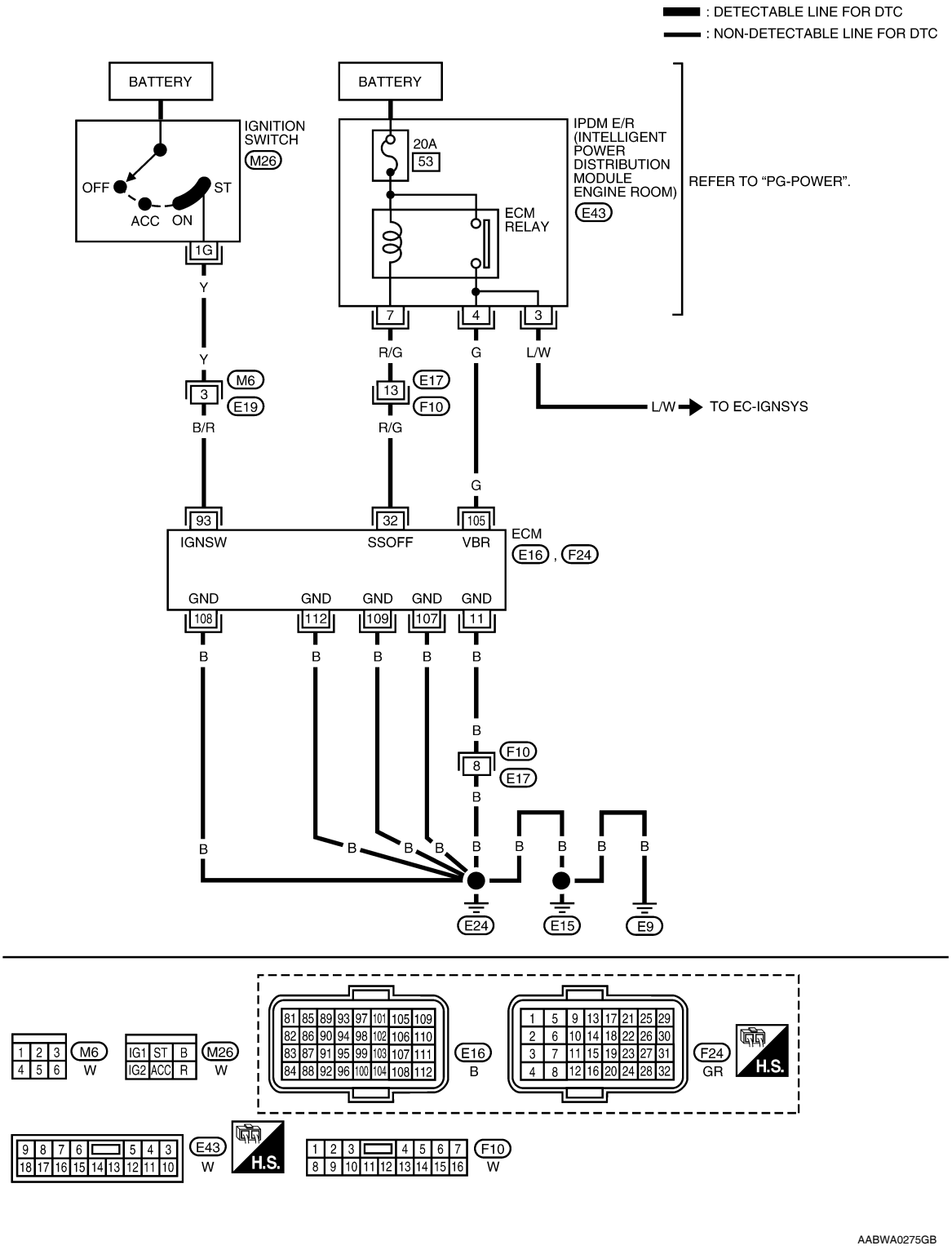

AABWA0275GB

Specification data are reference values and are measured between each terminal and ground.

CAUTION:

Do not use ECM ground terminals when measuring input/output voltage. Doing so may result in damage to the ECM's transistor. Use a ground other than ECM terminals, such as the ground.

TERMINAL NO.	WIRE COLOR	ITEM	CONDITION	DATA (DC Voltage)
11	B	ECM ground	**[Engine is running]** • Idle speed	Body ground
32	R/G	ECM relay (Self shut-off)	**[Engine is running]** **[Ignition switch: OFF]** • For a few seconds after turning ignition switch OFF	0 - 1.0 V
			[Ignition switch: OFF] • More than a few seconds after turning ignition switch OFF	BATTERY VOLTAGE (11 - 14 V)
93	B/R	Ignition switch	**[Ignition switch: OFF]**	0 V
			[Ignition switch: ON]	BATTERY VOLTAGE (11 - 14 V)
105	G	Power supply for ECM	**[Ignition switch: ON]**	BATTERY VOLTAGE (11 - 14 V)
107 108 109 112	B B B B	ECM ground	**[Engine is running]** • Idle speed	Body ground

Diagnosis Procedure

INFOID:0000000005284588

1. INSPECTION START

Start engine.
Is engine running?

Yes or No

Yes >> GO TO 8.
No >> GO TO 2.

2. CHECK ECM POWER SUPPLY CIRCUIT-I

1. Turn ignition switch OFF and then ON.
2. Check voltage between ECM terminal 93 and ground with CONSULT-III or tester.

Voltage: Battery voltage

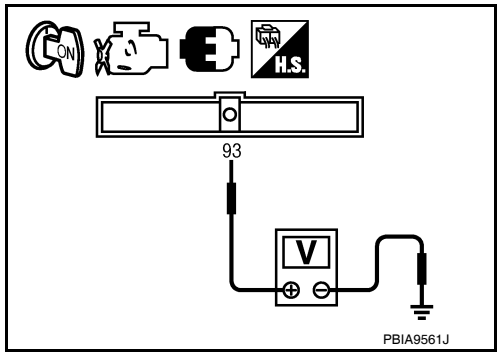

OK or NG

OK >> GO TO 4.
NG >> GO TO 3.

3. DETECT MALFUNCTIONING PART

Check the following.
- Harness connectors M6, E19
- Harness for open or short between ECM and ignition switch

>> Repair open circuit or short to ground or short to power in harness or connectors.

4. CHECK GROUND CONNECTIONS

1. Turn ignition switch OFF.

2. Loosen and retighten ground screws on the body.
   Refer to EC-157, "Ground Inspection".
- ⇦ : Vehicle front
- Body ground (1)

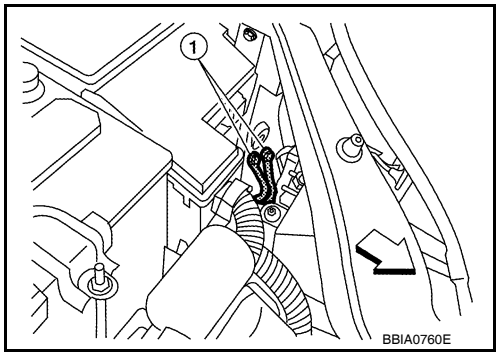

OK or NG

OK >> GO TO 5.
NG >> Repair or replace ground connections.

5. CHECK ECM GROUND CIRCUIT FOR OPEN AND SHORT-I

1. Disconnect ECM harness connector.
2. Check harness continuity between ECM terminals 11, 107, 108, 109, 112 and ground.
   Refer to Wiring Diagram.

Continuity should exist.

3. Also check harness for short to power.

OK or NG

OK >> GO TO 7.
NG >> GO TO 6.

6. DETECT MALFUNCTIONING PART

Check the following.
- Harness connectors F10, E17
- Harness for open or short between ECM and ground

>> Repair open circuit or short to power in harness or connectors.

7. CHECK ECM POWER SUPPLY CIRCUIT-II

1. Reconnect ECM harness connector.
2. Turn ignition switch ON.
3. Check voltage between IPDM E/R terminal 3 and ground with CONSULT-III or tester.

Voltage: Battery voltage

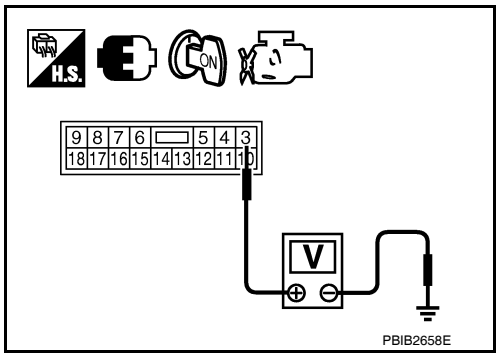

OK or NG

OK >> Go to EC-561.
NG >> GO TO 8.

8. CHECK ECM POWER SUPPLY CIRCUIT-III

1. Turn ignition switch OFF and wait at least 10 seconds.
2. Turn ignition switch ON and then OFF.

3. Check voltage between ECM terminal 105 and ground with CONSULT-III or tester.

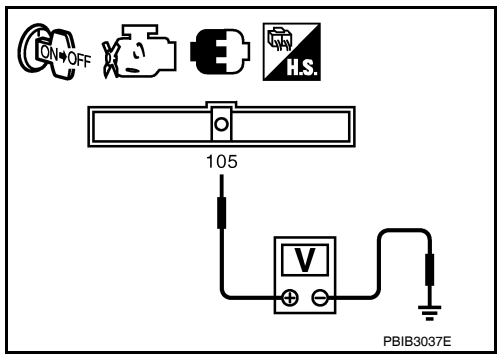

Voltage: After turning ignition switch OFF, battery voltage will exist for a few seconds, then drop approximately 0 V.

OK or NG

OK >> GO TO 14.
NG (Battery voltage does not exist.)>>GO TO 9.
NG (Battery voltage exists for more than a few seconds.)>>GO TO 11.

9. CHECK ECM POWER SUPPLY CIRCUIT-IV

1. Turn ignition switch OFF and wait at least 10 seconds.
2. Check voltage between ECM terminal 32 and ground with CONSULT-III or tester.

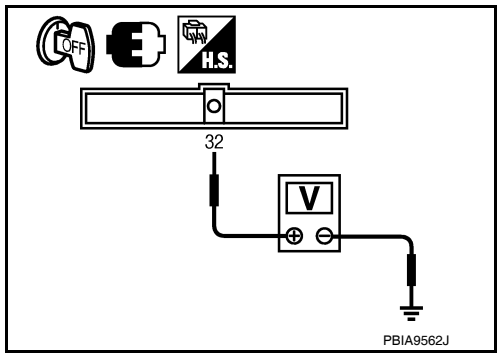

Voltage: Battery voltage

OK or NG

OK >> GO TO 10.
NG >> GO TO 11.

10. CHECK ECM POWER SUPPLY CIRCUIT-V

1. Disconnect ECM harness connector.
2. Disconnect IPDM E/R harness connector E43.
3. Check harness continuity between ECM terminal 105 and IPDM E/R terminal 4. Refer to Wiring Diagram.

Continuity should exist.

4. Also check harness for short to ground and short to power.

OK or NG

OK >> GO TO 17.
NG >> Repair open circuit or short to ground or short to power in harness or connectors.

11. CHECK ECM POWER SUPPLY CIRCUIT-VI

1. Disconnect ECM harness connector.
2. Disconnect IPDM E/R harness connector E43.
3. Check harness continuity between ECM terminal 32 and IPDM E/R terminal 7. Refer to Wiring Diagram.

Continuity should exist.

4. Also check harness for short to ground and short to power.

OK or NG

OK >> GO TO 13.
NG >> GO TO 12.

12. DETECT MALFUNCTIONING PART

Check the following.
- Harness connectors E7, F10
- Harness for open or short between ECM and IPDM E/R

>> Repair open circuit or short to ground or short to power in harness or connectors.

13. CHECK 20 A FUSE

1. Disconnect 20 A fuse from IPDM E/R.
2. Check 20 A fuse.

OK or NG

OK >> GO TO 17.
NG >> Replace 20 A fuse.

14. CHECK GROUND CONNECTIONS

Loosen and retighten ground screws on the body.
Refer to EC-157, "Ground Inspection".

- ⇦ : Vehicle front
- Body ground (1)

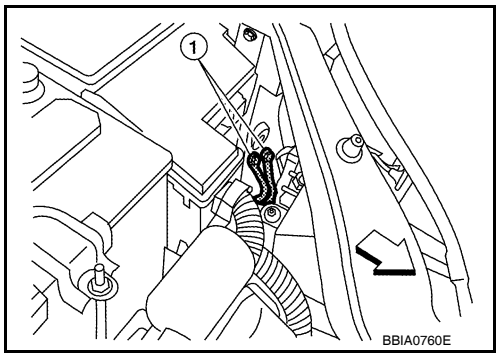

OK or NG

OK >> GO TO 15.
NG >> Repair or replace ground connections.

15. CHECK ECM GROUND CIRCUIT FOR OPEN AND SHORT-II

1. Disconnect ECM harness connector.
2. Check harness continuity between ECM terminals 10, 11, 108 and ground.
   Refer to Wiring Diagram.

   Continuity should exist.

3. Also check harness for short to power.

OK or NG

OK >> GO TO 17.
NG >> GO TO 16.

16. DETECT MALFUNCTIONING PART

Check the following.

- Harness connectors F10, E17
- Harness for open or short between ECM and ground

>> Repair open circuit or short to power in harness or connectors.

17. CHECK INTERMITTENT INCIDENT

Refer to EC-152.

OK or NG

OK >> Replace IPDM E/R. Refer to PG-17.
NG >> Repair open circuit or short to power in harness or connectors.

Ground Inspection

INFOID:0000000005284589

Ground connections are very important to the proper operation of electrical and electronic circuits. Ground connections are often exposed to moisture, dirt and other corrosive elements. The corrosion (rust) can become an unwanted resistance. This unwanted resistance can change the way a circuit works.
Electronically controlled circuits are very sensitive to proper grounding. A loose or corroded ground can drastically affect an electronically controlled circuit. A poor or corroded ground can easily affect the circuit. Even when the ground connection looks clean, there can be a thin film of rust on the surface.
When inspecting a ground connection follow these rules:

- Remove the ground bolt or screw.
- Inspect all mating surfaces for tarnish, dirt, rust, etc.
- Clean as required to assure good contact.

- Reinstall bolt or screw securely.
- Inspect for “add-on” accessories which may be interfering with the ground circuit.
- If several wires are crimped into one ground eyelet terminal, check for proper crimps. Make sure all of the wires are clean, securely fastened and providing a good ground path. If multiple wires are cased in one eyelet make sure no ground wires have excess wire insulation.

For detailed ground distribution information, refer to PG-29, "Ground Distribution".

Ground Inspection

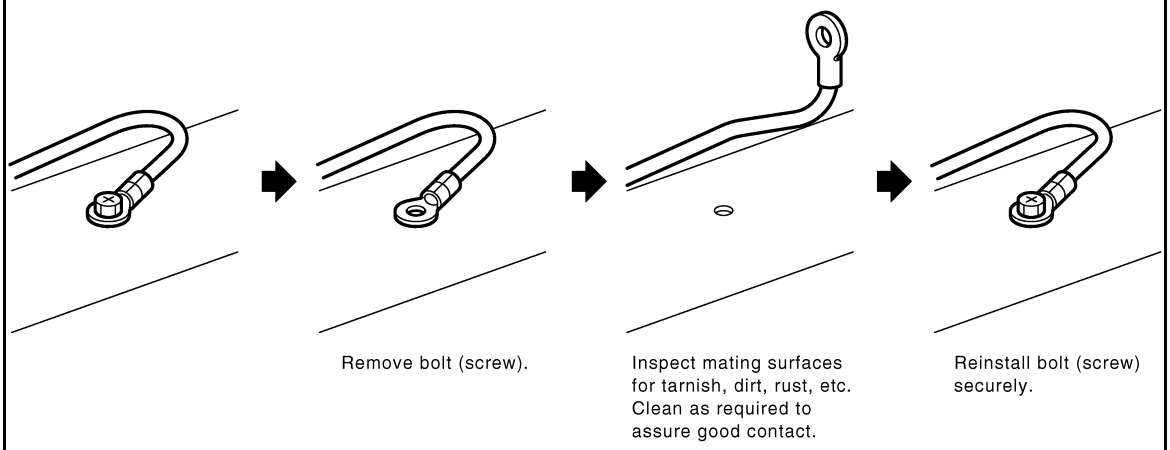

DTC U0101 CAN COMMUNICATION LINE

Description

INFOID:0000000005284590

CAN (Controller Area Network) is a serial communication line for real time application. It is an on-vehicle multiplex communication line with high data communication speed and excellent error detection ability. Many electronic control units are equipped onto a vehicle, and each control unit shares information and links with other control units during operation (not independent). In CAN communication, control units are connected with 2 communication lines (CAN H line, CAN L line) allowing a high rate of information transmission with less wiring. Each control unit transmits/receives data but selectively reads required data only.

On Board Diagnosis Logic

INFOID:0000000005284591

This self-diagnosis has the one trip detection logic.

DTC No.	Trouble diagnosis name	DTC detecting condition	Possible cause
U0101 0101	Lost communication with TCM	When ECM is not transmitting or receiving CAN communication signal of OBD (emission-related diagnosis) with TCM for 2 seconds or more.	• CAN communication line between TCM and ECM • CAN communication line is open or shorted.

DTC Confirmation Procedure

INFOID:0000000005284592

1. Turn ignition switch ON and wait at least 3 seconds.
2. Check DTC.
3. If DTC is detected, go to EC-160, "Diagnosis Procedure".

Wiring Diagram

INFOID:0000000005284593

EC-CAN-01

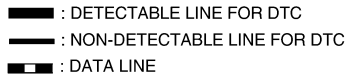

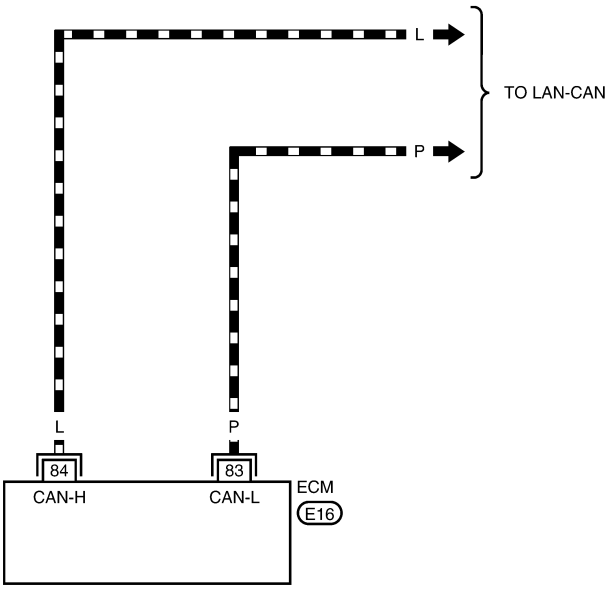

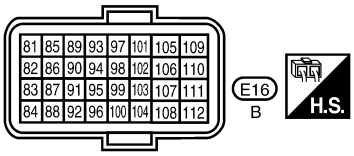

BBWA2870E

Diagnosis Procedure

INFOID:0000000005284594

Go to LAN-17, "Trouble Diagnosis Flow Chart".

DTC U0140 CAN COMMUNICATION LINE

Description

INFOID:0000000005284595

CAN (Controller Area Network) is a serial communication line for real time application. It is an on-vehicle multiplex communication line with high data communication speed and excellent error detection ability. Many electronic control units are equipped onto a vehicle, and each control unit shares information and links with other control units during operation (not independent). In CAN communication, control units are connected with 2 communication lines (CAN H line, CAN L line) allowing a high rate of information transmission with less wiring. Each control unit transmits/receives data but selectively reads required data only.

On Board Diagnosis Logic

INFOID:0000000005284596

This self-diagnosis has the one trip detection logic.

DTC No.	Trouble diagnosis name	DTC detecting condition	Possible cause
U0140 0140	Lost communication with BCM	When ECM is not transmitting or receiving CAN communication signal of OBD (emission-related diagnosis) with BCM for 2 seconds or more.	• CAN communication line between BCM and ECM • CAN communication line is open or shorted.

DTC Confirmation Procedure

INFOID:0000000005284597

1. Turn ignition switch ON and wait at least 3 seconds.
2. Check DTC.
3. If DTC is detected, go to EC-162, "Diagnosis Procedure".

Wiring Diagram

INFOID:0000000005284598

EC-CAN-01

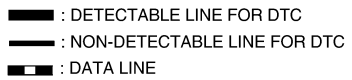

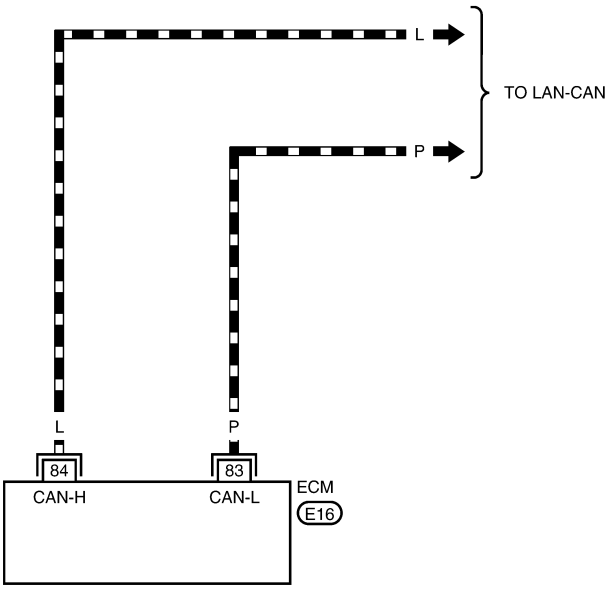

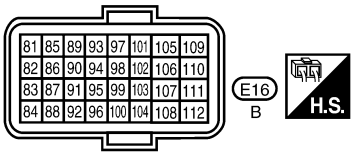

BBWA2870E

Diagnosis Procedure

INFOID:0000000005284599

Go to LAN-17, "Trouble Diagnosis Flow Chart".

DTC U1001 CAN COMMUNICATION LINE

Description

INFOID:0000000005284600

CAN (Controller Area Network) is a serial communication line for real time application. It is an on-vehicle multiplex communication line with high data communication speed and excellent error detection ability. Many electronic control units are equipped onto a vehicle, and each control unit shares information and links with other control units during operation (not independent). In CAN communication, control units are connected with 2 communication lines (CAN H line, CAN L line) allowing a high rate of information transmission with less wiring. Each control unit transmits/receives data but selectively reads required data only.

On Board Diagnosis Logic

INFOID:0000000005284601

The MIL will not light up for this self-diagnosis.

DTC No.	Trouble diagnosis name	DTC detecting condition	Possible cause
U1001 1001	CAN communication line	When ECM is not transmitting or receiving CAN communication signal other than OBD (emission-related diagnosis) for 2 seconds or more.	• Harness or connectors (CAN communication line is open or shorted.)

DTC Confirmation Procedure

INFOID:0000000005284602

1. Turn ignition switch ON and wait at least 3 seconds.
2. Check 1st trip DTC.
3. If 1st trip DTC is detected, go to EC-164, "Diagnosis Procedure".

Wiring Diagram

INFOID:0000000005284603

EC-CAN-01

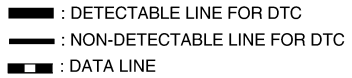

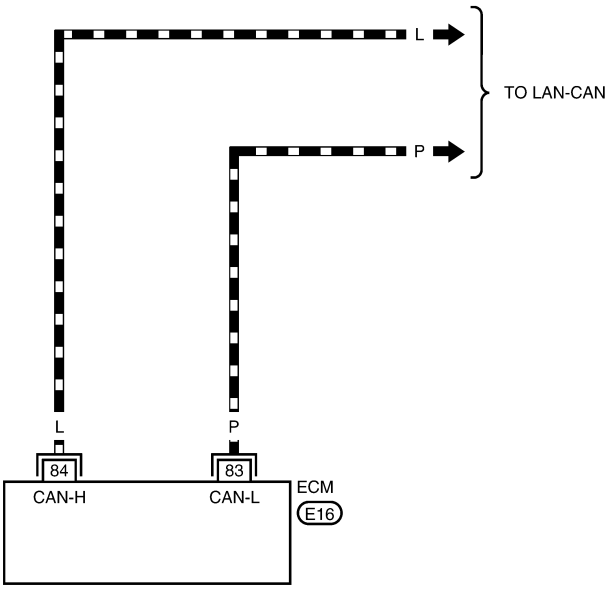

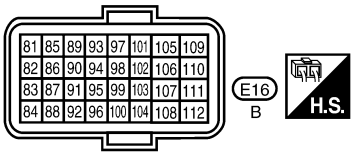

BBWA2870E

Diagnosis Procedure

INFOID:0000000005284604

Go to LAN-17, "Trouble Diagnosis Flow Chart".

DTC P0011 IVT CONTROL

Description

INFOID:0000000005284605

SYSTEM DESCRIPTION

Sensor	Input signal to ECM	ECM function	Actuator
Crankshaft position sensor (POS) Camshaft position sensor (PHASE)	Engine speed and piston position	Intake valve timing control	Intake valve timing control solenoid valve
Engine coolant temperature sensor	Engine coolant temperature		
Engine oil temperature sensor	Engine oil temperature		
ABS actuator and electric unit (control unit)	Vehicle speed*		
Combination meter			

*: This signal is sent to the ECM through CAN communication line.

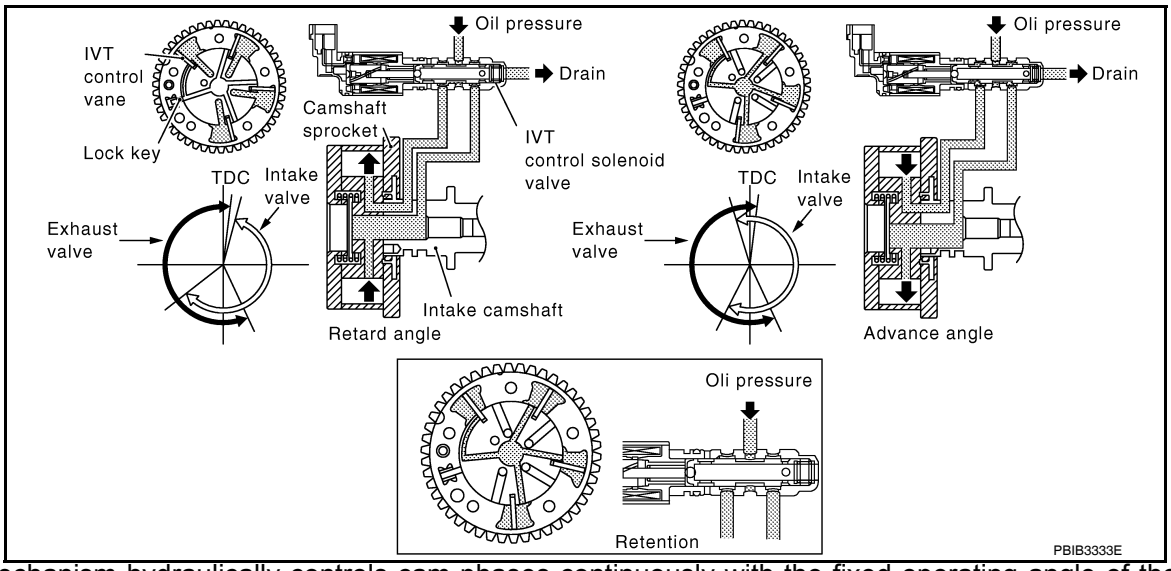

This mechanism hydraulically controls cam phases continuously with the fixed operating angle of the intake valve. The ECM receives signals such as crankshaft position, camshaft position, engine speed, and engine coolant temperature. Then, the ECM sends ON/OFF pulse duty signals to the intake valve timing control solenoid valve depending on driving status. This makes it possible to control the shut/open timing of the intake valve to increase engine torque in low/mid speed range and output in high-speed range.

CONSULT-III Reference Value in Data Monitor Mode

INFOID:0000000005284606

Specification data are reference values.

Monitor item	Condition		Specification
INT/V TIM (B1)	• Engine: After warming up • Air conditioner switch: OFF • Shift lever: P or N (CVT), Neutral (M/T) • No load	Idle	−5° - 5°CA
		When revving engine up to 2,000 rpm quickly	Approx. 0° - 40°CA
INT/V SOL (B1)	• Engine: After warming up • Air conditioner switch: OFF • Shift lever: P or N (CVT), Neutral (M/T) • No load	Idle	0% - 2%
		When revving engine up to 2,000 rpm quickly	Approx. 0% - 90%

On Board Diagnosis Logic

INFOID:0000000005284607

DTC No.	Trouble diagnosis name	Detecting condition	Possible cause
P0011 0011	Intake valve timing control performance	There is a gap between angle of target and phase-control angle degree.	• Crankshaft position sensor (POS) • Camshaft position sensor (PHASE) • Intake valve timing control solenoid valve • Accumulation of debris to the signal pick-up portion of the camshaft • Timing chain installation • Foreign matter caught in the oil groove for intake valve timing control

FAIL-SAFE MODE

ECM enters in fail-safe mode when the malfunction is detected.

Detected items	Engine operating condition in fail-safe mode
Intake valve timing control	The signal is not energized to the solenoid valve and the valve control does not function

DTC Confirmation Procedure

INFOID:0000000005284608

CAUTION:
Always drive at a safe speed.
NOTE:
- **If DTC P0011 is displayed with DTC P0075, first perform trouble diagnosis for DTC P0075. See EC-180.**
- If DTC Confirmation Procedure has been previously conducted, always turn ignition switch OFF and wait at least 10 seconds before conducting the next test.

TESTING CONDITION:
Before performing the following procedure, confirm that battery voltage is between 10 V and 16 V at idle.

WITH CONSULT-III

1. Turn ignition switch ON and select “DATA MONITOR” mode with CONSULT-III.
2. Start engine and warm it up to the normal operating temperature.
3. Maintain the following conditions for at least 10 consecutive seconds.
   Hold the accelerator pedal as steady as possible.

ENG SPEED	1,200 - 2,000 rpm (A constant rotation is maintained.)
COOLAN TEMP/S	More than 60°C (140°F)
B/FUEL SCHDL	More than 4.25 msec
Shift lever	P or N position (CVT) Neutral position (M/T)

4. Let engine idle for 10 seconds.
5. Check 1st trip DTC.
6. If 1st trip DTC is detected, go to EC-167, "Diagnosis Procedure".
   If 1st trip DTC is not detected, go to next step.
7. Maintain the following conditions for at least 10 consecutive seconds.

ENG SPEED	1,200 - 3,175 rpm (A constant rotation is maintained.)
COOLAN TEMP/S	More than 65°C (149°F)
Shift lever	1st or 2nd position
Driving location uphill	Driving vehicle uphill (Increased engine load will help maintain the driving conditions required for this test.)

8. Check 1st trip DTC.

9. If 1st trip DTC is detected, go to EC-167, "Diagnosis Procedure".

WITH GST
Follow the procedure “WITH CONSULT-III” above.

Diagnosis Procedure

INFOID:0000000005284609

1. CHECK OIL PRESSURE WARNING LAMP

1. Start engine.
2. Check oil pressure warning lamp and confirm it is not illuminated.

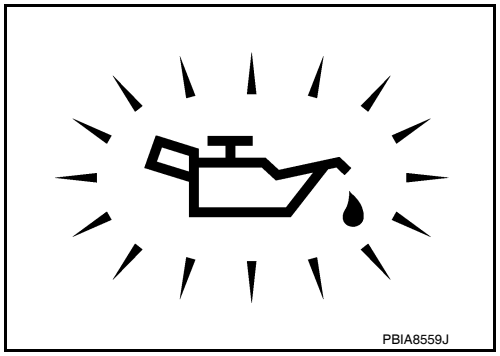

OK or NG

OK >> GO TO 2.
NG >> Go to LU-6, "Inspection".

2. CHECK INTAKE VALVE TIMING CONTROL SOLENOID VALVE

Refer to EC-168, "Component Inspection".

OK or NG

OK >> GO TO 3.
NG >> Replace intake valve timing control solenoid valve.

3. CHECK CRANKSHAFT POSITION SENSOR (POS)

Refer to EC-323, "Component Inspection".

OK or NG

OK >> GO TO 4.
NG >> Replace crankshaft position sensor (POS).

4. CHECK CAMSHAFT POSITION SENSOR (PHASE)

Refer to EC-328, "Component Inspection".

OK or NG

OK >> GO TO 5.
NG >> Replace camshaft position sensor (PHASE).

5. CHECK CAMSHAFT (INTAKE)

Check the following.
- Accumulation of debris to the signal plate of camshaft (1) rear end
- Chipping signal plate of camshaft rear end

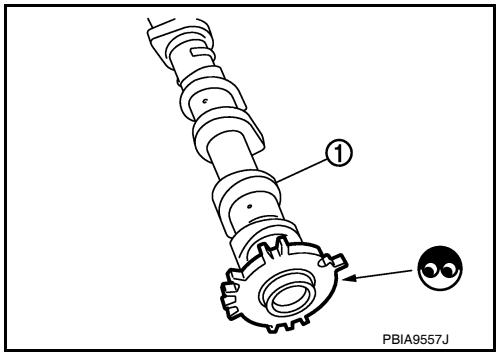

OK or NG

OK >> GO TO 6.
NG >> Remove debris and clean the signal plate of camshaft rear end or replace camshaft.

6. CHECK TIMING CHAIN INSTALLATION

Check service records for any recent repairs that may cause timing chain misaligned.
Are there any service records that may cause timing chain misaligned?

Yes or No

Yes >> Check timing chain installation. Refer to EM-40.
No >> GO TO 7.

7. CHECK LUBRICATION CIRCUIT

Refer to EM-50, "Removal and Installation".

OK or NG

OK >> GO TO 8.
NG >> Clean lubrication line.

8. CHECK INTERMITTENT INCIDENT

Refer to EC-152.
For Wiring Diagram, refer to EC-319, "Wiring Diagram" for CKP sensor (POS) and EC-325, "Wiring Diagram" for CMP sensor (PHASE).

>> **INSPECTION END**

Component Inspection

INFOID:0000000005284610

INTAKE VALVE TIMING CONTROL SOLENOID VALVE

1. Disconnect intake valve timing control solenoid valve harness connector.
2. Check resistance between intake valve timing control solenoid valve as follows.

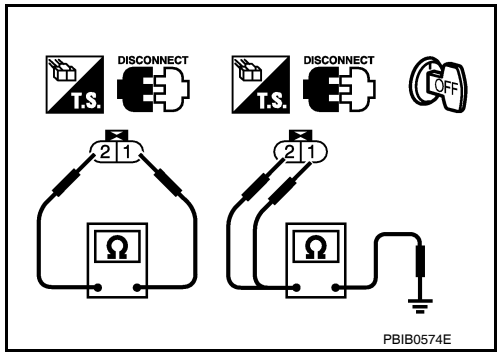

Terminal	Resistance
1 and 2	6.7 - 7.7Ω [at 20°C (68°F)]
1 or 2 and ground	∞Ω (Continuity should not exist.)

If NG, replace intake valve timing control solenoid valve.
If OK, go to next step.

3. Remove intake valve timing control solenoid valve.
4. Provide 12 V DC between intake valve timing control solenoid valve terminals and then interrupt it. Make sure that the plunger moves as shown in the figure.
   CAUTION:
   Do not apply 12 V DC continuously for 5 seconds or more. Doing so may result in damage to the coil in intake valve timing control solenoid valve.
   If NG, replace intake valve timing control solenoid valve.
   NOTE:
   Always replace O-ring when intake valve timing control solenoid valve is removed.

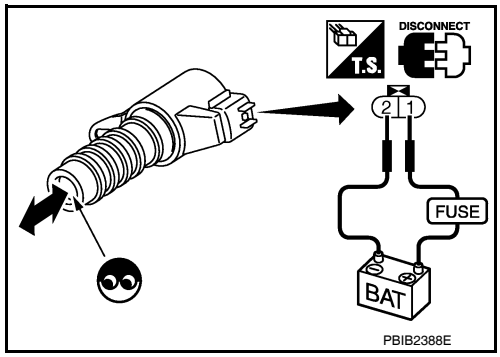

Removal and Installation

INFOID:0000000005284611

INTAKE VALVE TIMING CONTROL SOLENOID VALVE

Refer to EM-50.

DTC P0031, P0032 A/F SENSOR 1 HEATER

Description

INFOID:0000000005284612

SYSTEM DESCRIPTION

Sensor	Input Signal to ECM	ECM function	Actuator
Camshaft position sensor (PHASE) Crankshaft position sensor (POS)	Engine speed	Air fuel ratio (A/F) sensor 1 heater control	Air fuel ratio (A/F) sensor 1 heater
Mass air flow sensor	Amount of intake air		

The ECM performs ON/OFF duty control of the A/F sensor 1 heater corresponding to the engine operating condition to keep the temperature of A/F sensor 1 element at the specified range.

CONSULT-III Reference Value in Data Monitor Mode

INFOID:0000000005284613

Specification data are reference values.

Monitor item	Condition	Specification
A/F S1 HTR (B1)	• Engine: After warming up, idle the engine (More than 140 seconds after starting engine)	4 - 100%

On Board Diagnosis Logic

INFOID:0000000005284614

DTC No.	Trouble diagnosis name	DTC detecting condition	Possible cause
P0031 0031	Air fuel ratio (A/F) sensor 1 heater control circuit low	The current amperage in the air fuel ratio (A/F) sensor 1 heater circuit is out of the normal range. [An excessively low voltage signal is sent to ECM through the air fuel ratio (A/F) sensor 1 heater.]	• Harness or connectors [Air fuel ratio (A/F) sensor 1 heater circuit is open or shorted.] • Air fuel ratio (A/F) sensor 1 heater
P0032 0032	Air fuel ratio (A/F) sensor 1 heater control circuit high	The current amperage in the air fuel ratio (A/F) sensor 1 heater circuit is out of the normal range. [An excessively high voltage signal is sent to ECM through the air fuel ratio (A/F) sensor 1 heater.]	• Harness or connectors [Air fuel ratio (A/F) sensor 1 heater circuit is shorted.] • Air fuel ratio (A/F) sensor 1 heater

DTC Confirmation Procedure

INFOID:0000000005284615

NOTE:
If DTC Confirmation Procedure has been previously conducted, always turn ignition switch OFF and wait at least 10 seconds before conducting the next test.

TESTING CONDITION:
Before performing the following procedure, confirm that battery voltage is 11 V at idle.

1. Start engine and run it for at least 10 seconds at idle speed.
2. Check 1st trip DTC.
3. If 1st trip DTC is detected, go to EC-171, "Diagnosis Procedure".

Wiring Diagram

INFOID:0000000005284616

EC-A/FH-01

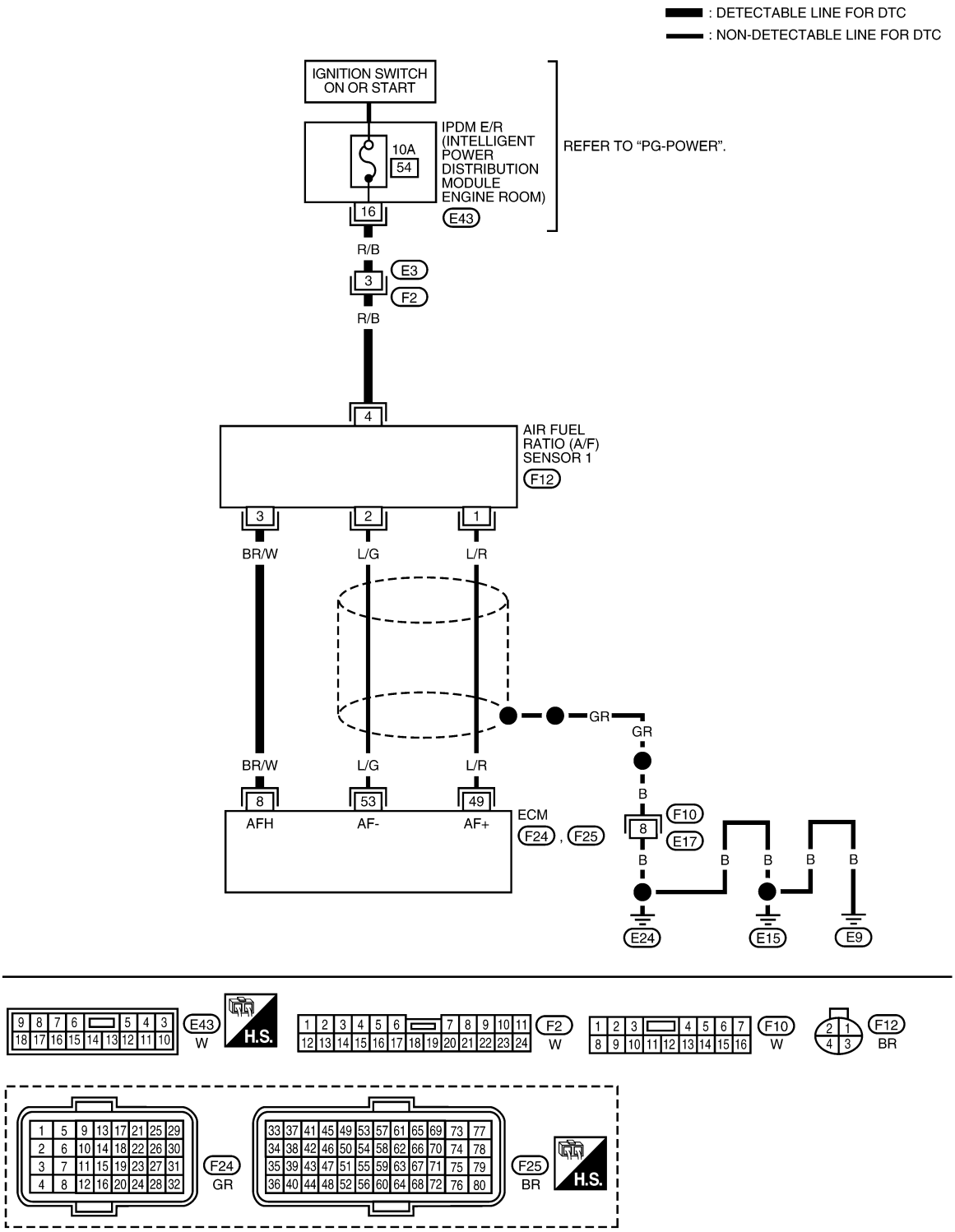

Specification data are reference values and are measured between each terminal and ground.
Pulse signal is measured by CONSULT-III.

CAUTION:

Do not use ECM ground terminals when measuring input/output voltage. Doing so may result in damage to the ECM's transistor. Use a ground other than ECM terminals, such as the ground.

TERMINAL NO.	WIRE COLOR	ITEM	CONDITION	DATA (DC Voltage)
8	BR/W	A/F sensor 1 heater	**[Engine is running]** • **Warm-up condition** • Idle speed (More than 140 seconds after starting engine)	Approximately 2.9 - 8.8 V★ 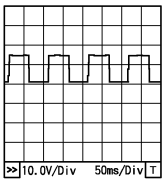 PBIA8148J
49	L/R	A/F sensor 1	**[Engine is running]** • **Warm-up condition** • Engine speed: 2,000 rpm	Approximately 1.8 V Output voltage varies with air fuel ratio.
53	L/G	A/F sensor 1	**[Ignition switch: ON]**	Approximately 2.2 V

★: Average voltage for pulse signal (Actual pulse signal can be confirmed by oscilloscope.)

Diagnosis Procedure

INFOID:0000000005284617

1. CHECK GROUND CONNECTIONS

1. Turn ignition switch OFF.
2. Loosen and retighten ground screws on the body.
   Refer to EC-157, "Ground Inspection".

- ⇦: Vehicle front
- Body ground (1)

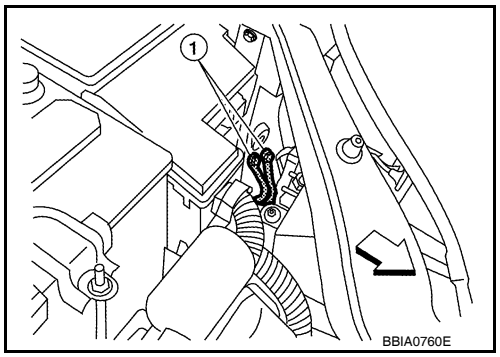

BBIA0760E

OK or NG

OK >> GO TO 2.
NG >> Repair or replace ground connections.

2. CHECK AIR FUEL RATIO (A/F) SENSOR 1 POWER SUPPLY CIRCUIT

1. Disconnect air fuel ratio (A/F) sensor 1 harness connector (1).
2. Turn ignition switch ON.

- Air fuel ratio (A/F) sensor 1 (2)

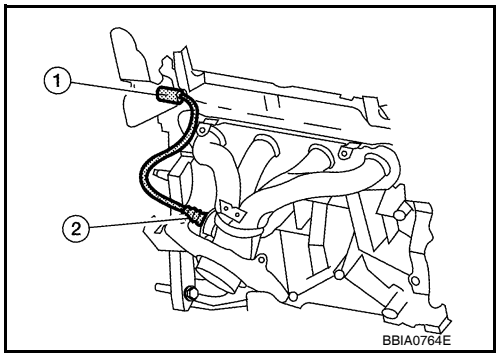

BBIA0764E

3. Check voltage between A/F sensor 1 terminal 4 and ground with CONSULT-III or tester.

Voltage: Battery voltage

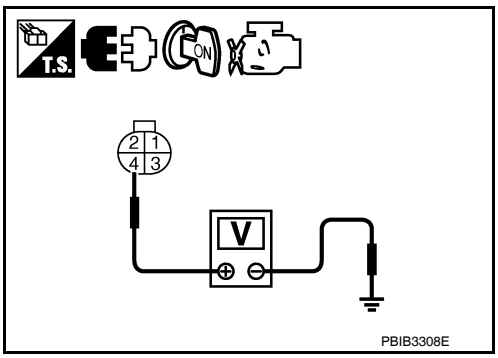

OK or NG

OK >> GO TO 4.
NG >> GO TO 3.

3. DETECT MALFUNCTIONING PART

Check the following.
- Harness connectors E3, F2
- 10 A fuse
- Harness for open or short between A/F sensor 1 and fuse

>> Repair or replace harness or connectors.

4. CHECK A/F SENSOR 1 HEATER OUTPUT SIGNAL CIRCUIT

1. Turn ignition switch OFF.
2. Disconnect ECM harness connector.
3. Check harness continuity between ECM terminal 8 and A/F sensor 1 terminal 3. Refer to Wiring Diagram.

Continuity should exist.

4. Also check harness for short to ground and short to power.

OK or NG

OK >> GO TO 5.
NG >> Repair open circuit or short to ground or short to power in harness or connectors.

5. CHECK A/F SENSOR 1 HEATER

Refer to EC-172, "Component Inspection".

OK or NG

OK >> GO TO 6.
NG >> Replace air fuel ratio (A/F) sensor 1.

6. CHECK INTERMITTENT INCIDENT

Perform EC-152.

>> **INSPECTION END**

Component Inspection

INFOID:0000000005284618

AIR FUEL RATIO (A/F) SENSOR 1 HEATER

1. Check resistance between A/F sensor 1 terminals as follows.

Terminal No.	Resistance
3 and 4	1.8 - 2.44 Ω [at 25°C (77°F)]
3 and 1, 2	∞ Ω (Continuity should not exist)
4 and 1, 2	

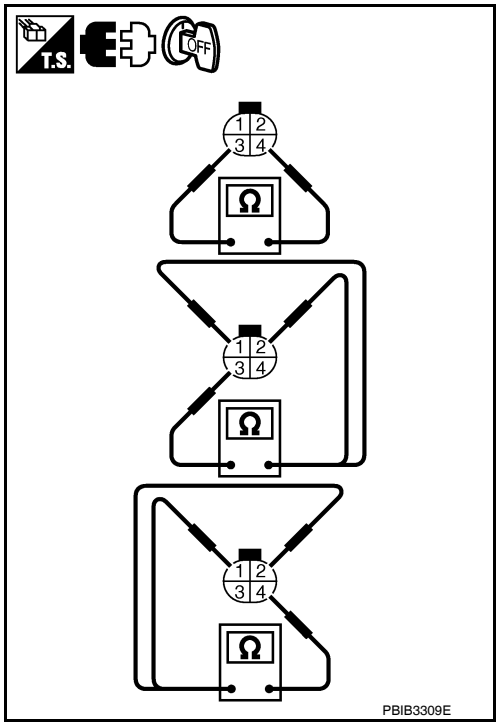

2. If NG, replace air fuel ratio (A/F) sensor 1.

CAUTION:

- **Discard any A/F sensor which has been dropped from a height of more than 0.5 m (19.7 in) onto a hard surface such as a concrete floor; use a new one.**
- **Before installing new A/F sensor, clean exhaust system threads using Heated Oxygen Sensor Thread Cleaner tool J-43897-18 or J-43897-12 and approved anti-seize lubricant.**

Removal and Installation

INFOID:0000000005284619

AIR FUEL RATIO SENSOR HEATER

Refer to EM-23.

DTC P0037, P0038 HO2S2 HEATER

Description

INFOID:0000000005284620

SYSTEM DESCRIPTION

Sensor	Input Signal to ECM	ECM Function	Actuator
Camshaft position sensor (PHASE)	Engine speed	Heated oxygen sensor 2 heater control	Heated oxygen sensor 2 heater
Crankshaft position sensor (POS)			
Engine coolant temperature sensor	Engine coolant temperature		
Mass air flow sensor	Amount of intake air		

The ECM performs ON/OFF control of the heated oxygen sensor 2 heater corresponding to the engine speed, amount of intake air and engine coolant temperature.

OPERATION

Engine speed rpm	Heated oxygen sensor 2 heater
Above 3,600	OFF
• Below 3,600 rpm after the following conditions are met. - Engine: After warming up - Keeping the engine speed between 3,500 and 4,000 rpm for 1 minute and at idle for 1 minute under no load	ON

CONSULT-III Reference Value in Data Monitor Mode

INFOID:0000000005284621

Specification data are reference values.

monitor item	Condition	Specification
HO2S2 HTR (B1)	• Engine speed: Below 3,600 rpm after the following conditions are met - Engine: After warming up - Keeping the engine speed between 3,500 and 4,000 rpm for 1 minute and at idle for 1 minute under no load.	ON
	• Engine speed: Above 3,600 rpm	OFF

On Board Diagnosis Logic

INFOID:0000000005284622

DTC No.	Trouble diagnosis name	DTC detecting condition	Possible cause
P0037 0037	Heated oxygen sensor 2 heater control circuit low	The current amperage in the heated oxygen sensor 2 heater circuit is out of the normal range. (An excessively low voltage signal is sent to ECM through the heated oxygen sensor 2 heater.)	• Harness or connectors (Heated oxygen sensor 2 heater circuit is open or shorted.) • Heated oxygen sensor 2 heater
P0038 0038	Heated oxygen sensor 2 heater control circuit high	The current amperage in the heated oxygen sensor 2 heater circuit is out of the normal range. (An excessively high voltage signal is sent to ECM through the heated oxygen sensor 2 heater.)	• Harness or connectors (Heated oxygen sensor 2 heater circuit is shorted.) • Heated oxygen sensor 2 heater

DTC Confirmation Procedure

INFOID:0000000005284623

NOTE:
If DTC Confirmation Procedure has been previously conducted, always turn ignition switch OFF and wait at least 10 seconds before conducting the next test.
TESTING CONDITION:
Before performing the following procedure, confirm that battery voltage is between 11 V at idle.

WITH CONSULT-III

1. Turn ignition switch ON and select “DATA MONITOR” mode with CONSULT-III.
2. Start engine and warm it up to the normal operating temperature.
3. Turn ignition switch OFF and wait at least 10 seconds.
4. Start engine and keep the engine speed between 3,500 and 4,000 rpm for at least 1 minute under no load.
5. Let engine idle for 1 minute.
6. Check 1st trip DTC.
7. If 1st trip DTC is detected, go to EC-177, "Diagnosis Procedure".

WITH GST

Follow the procedure “WITH CONSULT-III” above.

Wiring Diagram

INFOID:0000000005284624

EC-HO2S2H-01

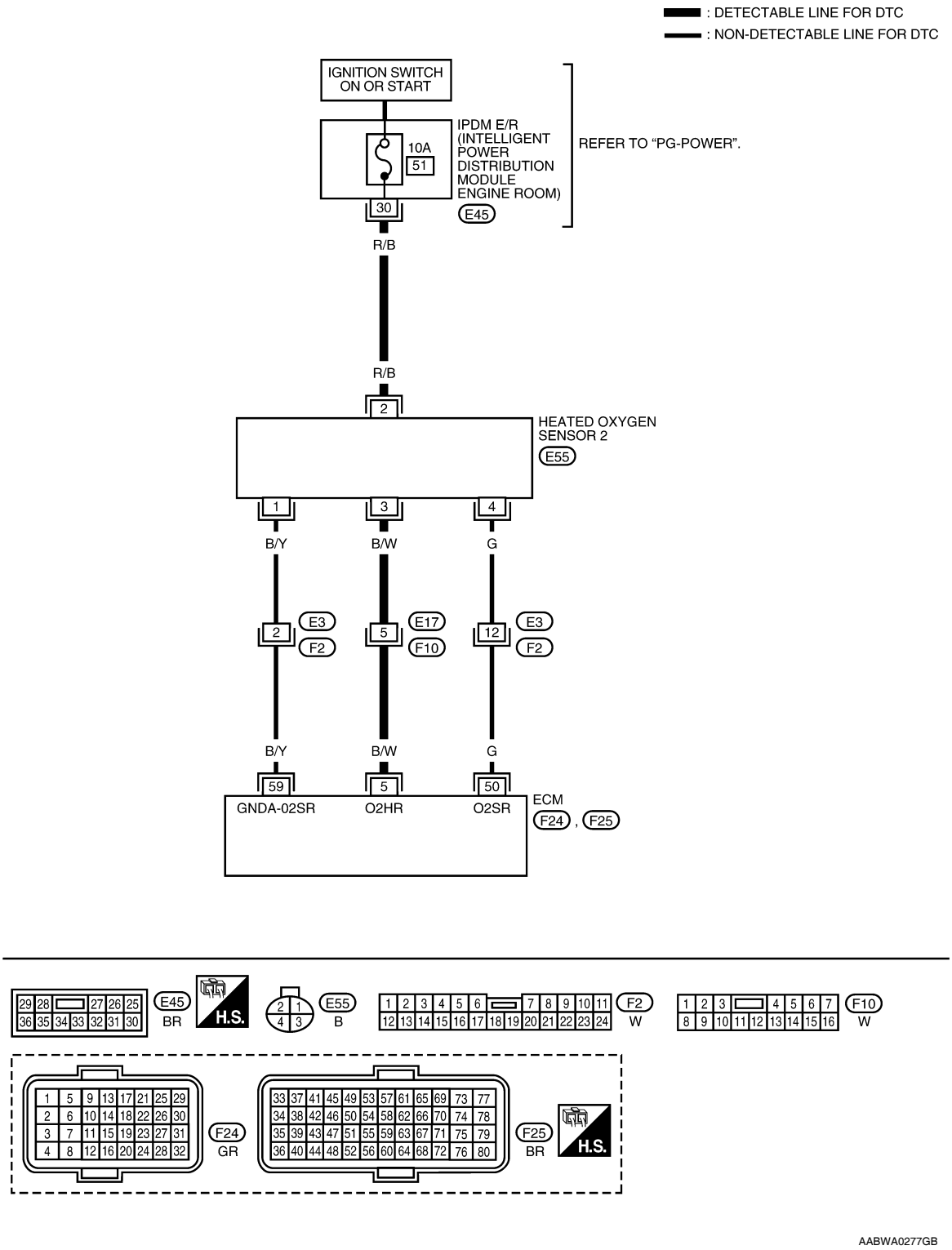

Specification data are reference values and are measured between each terminal and ground.
Pulse signal is measured by CONSULT-III.

CAUTION:

Do not use ECM ground terminals when measuring input/output voltage. Doing so may result in damage to the ECM's transistor. Use a ground other than ECM terminals, such as the ground.

TERMINAL NO.	WIRE COLOR	ITEM	CONDITION	DATA (DC Voltage)
5	B/W	Heated oxygen sensor 2 heater	**[Engine is running]** • Engine speed: Below 3,600 rpm after the following conditions are met. - Engine: After warming up - Keeping the engine speed between 3,500 and 4,000 rpm for 1 minute and at idle for 1 minute under no load.	Approximately 10 V★ 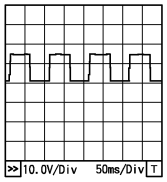 PBIA8148J
			[Ignition switch: ON] • Engine stopped **[Engine is running]** • Engine speed: Above 3,600 rpm.	BATTERY VOLTAGE (11 - 14 V)
50	G	Heated oxygen sensor 2	**[Engine is running]** • Revving engine from idle to 3,000 rpm quickly after the following conditions are met. - Engine: After warming up - Keeping the engine speed between 3,500 and 4,000 rpm for 1 minute and at idle for 1 minute under no load.	0 - Approximately 1.0 V
59	B/Y	Sensor ground (Heated oxygen sensor 2)	**[Engine is running]** • **Warm-up condition** • Idle speed	Approximately 0 V

★: Average voltage for pulse signal (Actual pulse signal can be confirmed by oscilloscope.)

Diagnosis Procedure

INFOID:0000000005284625

1. CHECK GROUND CONNECTIONS

1. Turn ignition switch OFF.
2. Loosen and retighten ground screw on the body.
   Refer to EC-157, "Ground Inspection".

- ⇦ : Vehicle front
- Body ground (1)

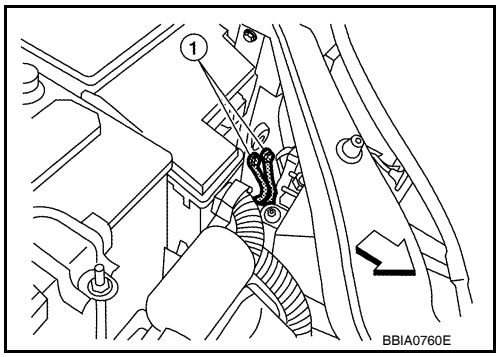

OK or NG

OK >> GO TO 2.
NG >> Repair or replace ground connections.

2. CHECK HO2S2 POWER SUPPLY CIRCUIT

1. Disconnect heated oxygen sensor 2 harness connector (2).

- ⇦ : Vehicle front
- Heated oxygen sensor 2 (1)

2. Turn ignition switch ON.

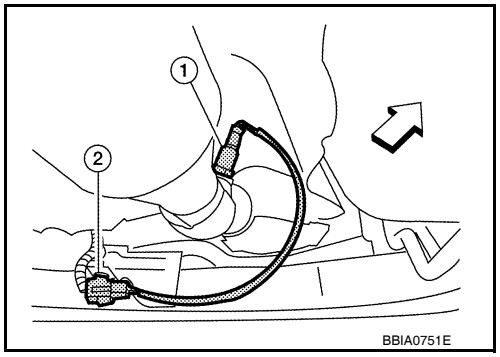

3. Check voltage between HO2S2 terminal 2 and ground with CONSULT-III or tester.

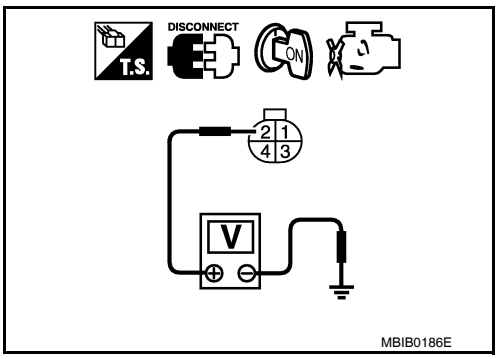

Voltage: Battery voltage

OK or NG

OK >> GO TO 4.
NG >> GO TO 3.

3. DETECT MALFUNCTIONING PART

Check the following.
- 10 A fuse
- Harness for open or short between heated oxygen sensor 2 and fuse

>> Repair open circuit or short to ground or short to power in harness or connectors.

4. CHECK HO2S2 OUTPUT SIGNAL CIRCUIT FOR OPEN AND SHORT

1. Turn ignition switch OFF.
2. Disconnect ECM harness connector.
3. Check harness continuity between ECM terminal 5 and HO2S2 terminal 3. Refer to Wiring Diagram.

Continuity should exist.

4. Also check harness for short to ground and short to power.

OK or NG

OK >> GO TO 6.
NG >> GO TO 5.

5. DETECT MALFUNCTIONING PART

Check the following.
- Harness connectors E17, F10
- Harness for open or short between heated oxygen sensor 2 and ECM

>> Repair open circuit or short to ground or short to power in harness or connectors.

6. CHECK HEATED OXYGEN SENSOR 2 HEATER

Refer to EC-178, "Component Inspection".

OK or NG

OK >> GO TO 7.
NG >> Replace heated oxygen sensor 2.

7. CHECK INTERMITTENT INCIDENT

Refer to EC-152.

>> **INSPECTION END**

Component Inspection

INFOID:0000000005284626

HEATED OXYGEN SENSOR 2 HEATER

1. Check resistance between HO2S2 terminals as follows.

Terminal No.	Resistance
2 and 3	3.4 - 4.4 Ω [at 25°C (77°F)]
1 and 2, 3, 4	∞ Ω (Continuity should not exist)
4 and 1, 2, 3	

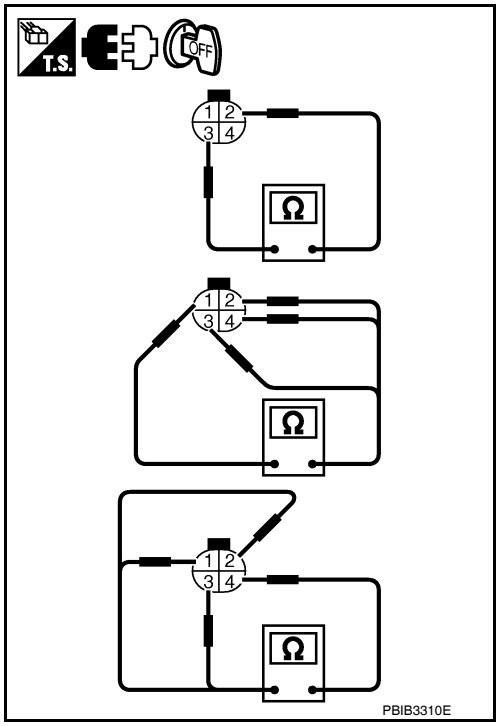

2. If NG, replace heated oxygen sensor 2.

CAUTION:

- **Discard any heated oxygen sensor which has been dropped from a height of more than 0.5 m (19.7 in) onto a hard surface such as a concrete floor; use a new one.**
- **Before installing new oxygen sensor, clean exhaust system threads using Oxygen Sensor Thread Cleaner tool J-43897-18 or J-43897-12 and approved anti-seize lubricant.**

Removal and Installation

INFOID:0000000005284627

HEATED OXYGEN SENSOR 2

Refer to EM-23.

DTC P0075 IVT CONTROL SOLENOID VALVE

Component Description

INFOID:0000000005284628

Intake valve timing control solenoid valve is activated by ON/OFF pulse duty (ratio) signals from the ECM.
The intake valve timing control solenoid valve changes the oil amount and direction of flow through intake valve timing control unit or stops oil flow.
The longer pulse width advances valve angle.
The shorter pulse width retards valve angle.
When ON and OFF pulse widths become equal, the solenoid valve stops oil pressure flow to fix the intake valve angle at the control position.

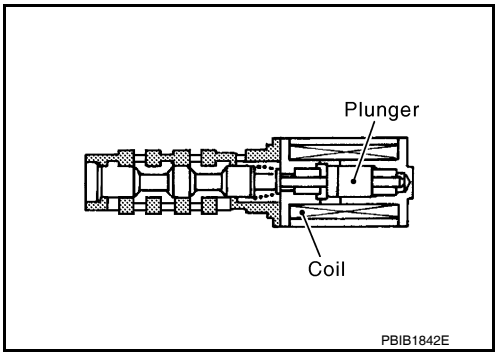

CONSULT-III Reference Value in Data Monitor Mode

INFOID:0000000005284629

Specification data are reference values.

Monitor item	Condition		Specification
INT/V SOL (B1)	• Engine: After warming up • Air conditioner switch: OFF • Shift lever: P or N (CVT), Neutral (M/T) • No load	Idle	0% - 2%
		When revving engine up to 2,000 rpm quickly	Approx. 0% - 90%

On Board Diagnosis Logic

INFOID:0000000005284630

DTC No.	Trouble diagnosis name	DTC detecting condition	Possible cause
P0075 0075	Intake valve timing control solenoid valve circuit	An improper voltage is sent to the ECM through intake valve timing control solenoid valve.	• Harness or connectors (Intake valve timing control solenoid valve circuit is open or shorted.) • Intake valve timing control solenoid valve

DTC Confirmation Procedure

INFOID:0000000005284631

NOTE:
If DTC Confirmation Procedure has been previously conducted, always turn ignition switch OFF and wait at least 10 seconds before conducting the next test.

1. Start engine and let it idle for 5 seconds.
2. Check 1st trip DTC.
3. If 1st trip DTC is detected, go to EC-182, "Diagnosis Procedure".

Wiring Diagram

INFOID:0000000005284632

EC-IVC-01

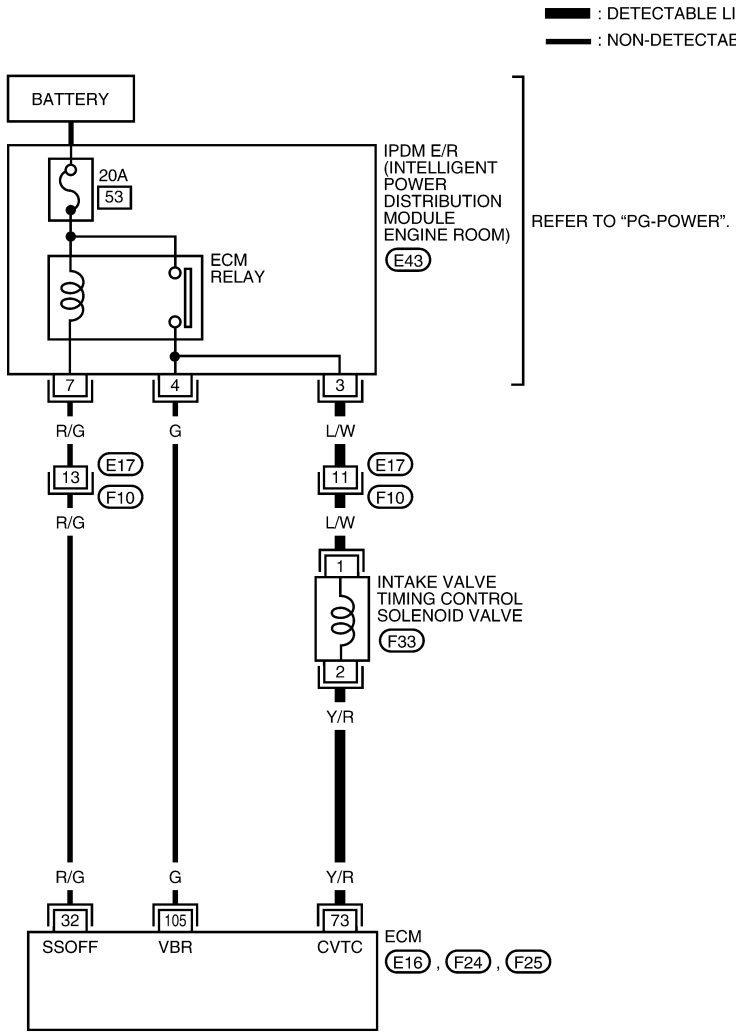

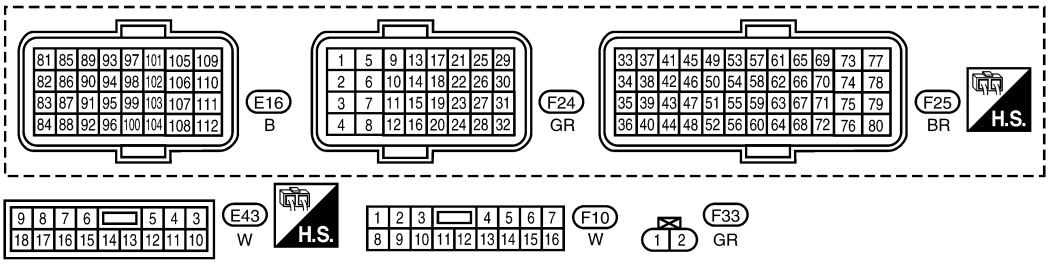

AABWA0276GB

Specification data are reference values and are measured between each terminal and ground.
Pulse signal is measured by CONSULT-III.

CAUTION:

Do not use ECM ground terminals when measuring input/output voltage. Doing so may result in damage to the ECM's transistor. Use a ground other than ECM terminals, such as the ground.

TERMINAL NO.	WIRE COLOR	ITEM	CONDITION	DATA (DC Voltage)
32	R/G	ECM relay (Self shut-off)	**[Engine is running]** **[Ignition switch: OFF]** • For a few seconds after turning ignition switch OFF	0 - 1.0 V
			[Ignition switch: OFF] • More than a few seconds after turning ignition switch OFF	BATTERY VOLTAGE (11 - 14 V)
73	Y/R	Intake valve timing control solenoid valve	**[Engine is running]** • **Warm-up condition** • Idle speed	BATTERY VOLTAGE (11 - 14 V)
			[Engine is running] • **Warm-up condition** • When revving engine up to 2,000 rpm quickly	7 - 10 V★ 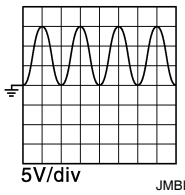
105	G	Power supply for ECM	**[Ignition switch: ON]**	BATTERY VOLTAGE (11 - 14 V)

★: Average voltage for pulse signal (Actual pulse signal can be confirmed by oscilloscope.)

Diagnosis Procedure

INFOID:0000000005284633

1. CHECK INTAKE VALVE TIMING CONTROL SOLENOID VALVE POWER SUPPLY CIRCUIT

1. Turn ignition switch OFF.
2. Disconnect intake valve timing control solenoid valve (1) harness connector.
3. Turn ignition switch ON.

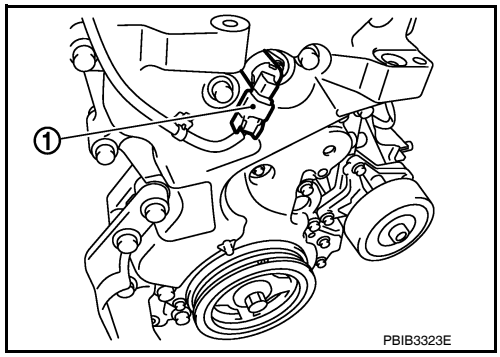

4. Check voltage between intake valve timing control solenoid valve terminal 1 and ground with CONSULT-III or tester.

Voltage: Battery voltage

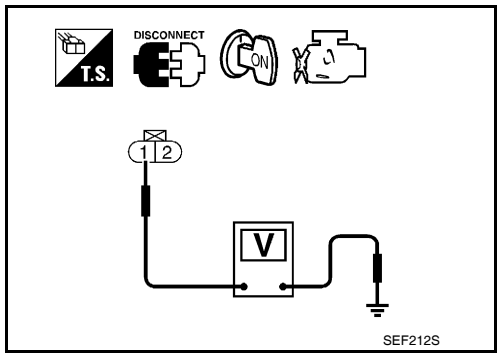

OK or NG

OK >> GO TO 3.
NG >> GO TO 2.

2. DETECT MALFUNCTION PART

Check the following.

- Harness connectors E17, F10
- Harness for open or short between intake valve timing control solenoid valve and IPDM E/R

>> Repair or replace harness or connectors.

3. CHECK INTAKE VALVE TIMING CONTROL SOLENOID VALVE OUTPUT SIGNAL CIRCUIT FOR OPEN AND SHORT

1. Turn ignition switch OFF.
2. Disconnect ECM harness connector.
3. Check harness continuity between ECM terminal 73 and intake valve timing control solenoid valve terminal 2. Refer to Wiring Diagram.

Continuity should exist.

4. Also check harness for short to ground and short to power.

OK or NG

OK >> GO TO 4.
NG >> Repair open circuit or short to ground or short to power in harness or connectors.

4. CHECK INTAKE VALVE TIMING CONTROL SOLENOID VALVE

Refer to EC-183, "Component Inspection".

OK or NG

OK >> GO TO 5.
NG >> Replace intake valve timing control solenoid valve.

5. CHECK INTERMITTENT INCIDENT

Refer to EC-152.

>> **INSPECTION END**

Component Inspection

INFOID:0000000005284634

INTAKE VALVE TIMING CONTROL SOLENOID VALVE

1. Disconnect intake valve timing control solenoid valve harness connector.
2. Check resistance between intake valve timing control solenoid valve as follows.

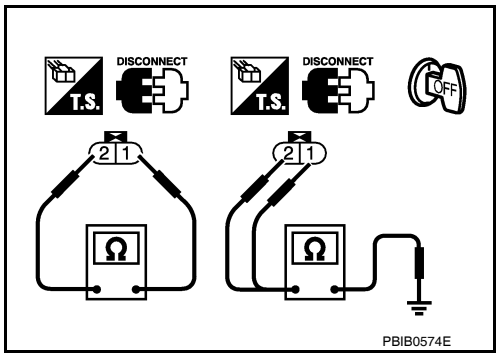

Terminal	Resistance
1 and 2	6.7 - 7.7 Ω [at 20°C (68°F)]
1 or 2 and ground	∞Ω (Continuity should not exist.)

If NG, replace intake valve timing control solenoid valve.
If OK, go to next step.

3. Remove intake valve timing control solenoid valve.
4. Provide 12 V DC between intake valve timing control solenoid valve terminals and then interrupt it. Make sure that the plunger moves as shown in the figure.

CAUTION:
Do not apply 12 V DC continuously for 5 seconds or more. Doing so may result in damage to the coil in intake valve timing control solenoid valve.
If NG, replace intake valve timing control solenoid valve.
NOTE:
Always replace O-ring when intake valve timing control solenoid valve is removed.

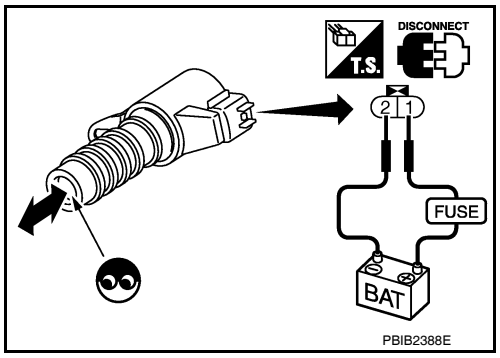

Removal and Installation

INFOID:0000000005284635

INTAKE VALVE TIMING CONTROL SOLENOID VALVE

Refer to EM-40.

DTC P0101 MAF SENSOR

Component Description

INFOID:0000000005284636

The mass air flow sensor (1) is placed in the stream of intake air. It measures the intake flow rate by measuring a part of the entire intake flow. The mass air flow sensor controls the temperature of the hot wire to a certain amount. The heat generated by the hot wire is reduced as the intake air flows around it. The more air, the greater the heat loss.
Therefore, the electric current supplied to hot wire is changed to maintain the temperature of the hot wire as air flow increases. The ECM detects the air flow by means of this current change.

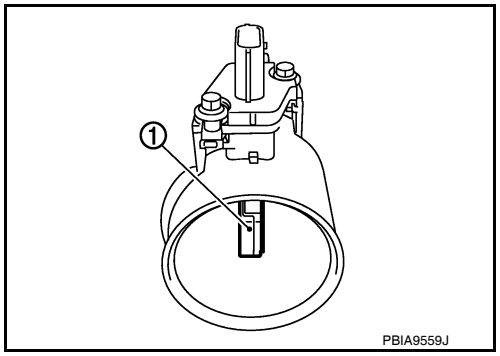

CONSULT-III Reference Value in Data Monitor Mode

INFOID:0000000005284637

Specification data are reference values.

Monitor item	Condition		Specification
MAS A/F SE-B1	• See EC-144.		
CAL/LD VALUE	• Engine: After warming up • Shift lever: P or N (CVT), Neutral (M/T) • Air conditioner switch: OFF • No load	Idle	10% - 35%
		2,500 rpm	10% - 35%
MASS AIRFLOW	• Engine: After warming up • Shift lever: P or N (CVT), Neutral (M/T) • Air conditioner switch: OFF • No load	Idle	1.0 - 4.0 g·m/s
		2,500 rpm	4.0 - 10.0 g·m/s

On Board Diagnosis Logic

INFOID:0000000005284638

DTC No.	Trouble diagnosis name	DTC detecting condition		Possible cause
P0101 0101	Mass air flow sensor circuit range/performance	A)	A high voltage from the sensor is sent to ECM under light load driving condition.	• Harness or connectors (Mass air flow sensor circuit is open or shorted.) • Mass air flow sensor • EVAP control system pressure sensor • Intake air temperature sensor
		B)	A low voltage from the sensor is sent to ECM under heavy load driving condition.	• Harness or connectors (Mass air flow sensor circuit is open or shorted.) • Intake air leaks • Mass air flow sensor • EVAP control system pressure sensor • Intake air temperature sensor

DTC Confirmation Procedure

INFOID:0000000005284639

Perform PROCEDURE FOR MALFUNCTION A first.
If the DTC cannot be confirmed, perform PROCEDURE FOR MALFUNCTION B.
NOTE:
If DTC Confirmation Procedure has been previously conducted, always turn ignition switch OFF and wait at least 10 seconds before conducting the next test.

PROCEDURE FOR MALFUNCTION A

NOTE:

If engine will not start or stops soon, wait at least 10 seconds with engine stopped (Ignition switch ON) instead of running engine at idle speed.

1. Start engine and warm it up to normal operating temperature.
2. Run engine for at least 10 seconds at idle speed.
3. Check 1st trip DTC.
4. If 1st trip DTC is detected, go to EC-189, "Diagnosis Procedure".

PROCEDURE FOR MALFUNCTION B

CAUTION:
Always drive vehicle at a safe speed.

WITH CONSULT-III

1. Turn ignition switch ON.
2. Start engine and warm it up to normal operating temperature.
   If engine cannot be started, go to EC-189, "Diagnosis Procedure".
3. Select “DATA MONITOR” mode with CONSULT-III.
4. Check the voltage of “MAS A/F SE-B1” with “DATA MONITOR”.
5. Increases engine speed to about 4,000 rpm.
6. Monitor the linear voltage rise in response to engine speed increases.
   If NG, go to EC-189, "Diagnosis Procedure".
   If OK, go to following step.

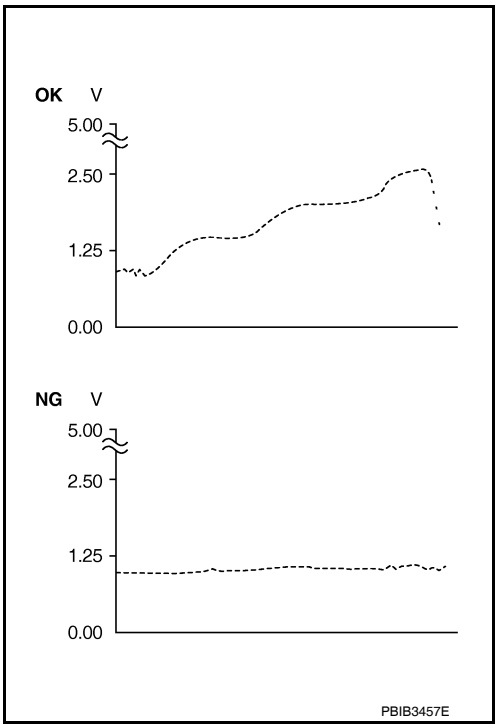

7. Maintain the following conditions for at least 10 consecutive seconds.

ENG SPEED	More than 2,000 rpm
TP SEN 1-B1	More than 1.5 V
TP SEN 2-B1	More than 1.5 V
Shift lever	Suitable position
Driving location	Driving vehicle uphill (Increased engine load) will help maintain the driving conditions required for this test.

8. Check 1st trip DTC.
9. If 1st trip DTC is detected, go to EC-189, "Diagnosis Procedure".

Overall Function Check

INFOID:0000000005284640

PROCEDURE FOR MALFUNCTION B

Use this procedure to check the overall function of the mass air flow sensor circuit. During this check, a 1st DTC might not be confirmed.

WITH GST

1. Start engine and warm it up to normal operating temperature.

2. Select Service $01 with GST.
3. Check the mass air flow sensor signal with Service $01.
4. Check for linear mass air flow sensor signal value rise in response to increases to about 4,000 rpm in engine speed.
5. If NG, go to EC-189, "Diagnosis Procedure".

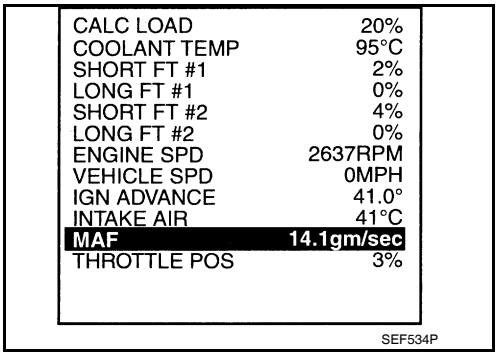

Wiring Diagram

INFOID:0000000005284641

EC-MAFS-01

: DETECTABLE LINE FOR DTC
: NON-DETECTABLE LINE FOR DTC

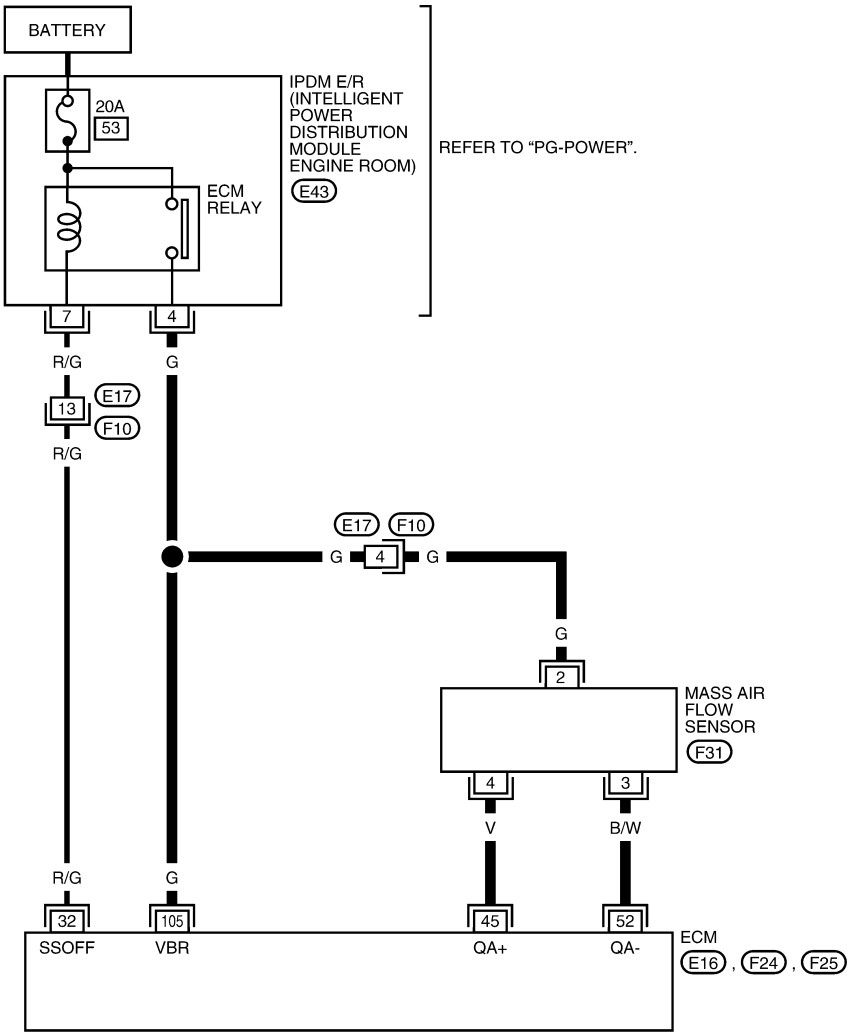

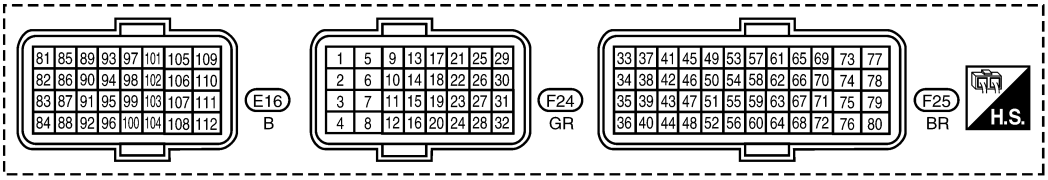

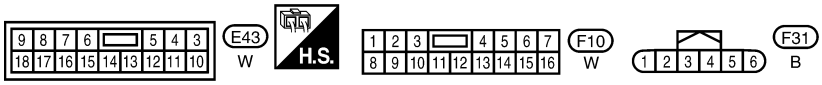

AABWA0281GB

Specification data are reference values and are measured between each terminal and ground.

CAUTION:

Do not use ECM ground terminals when measuring input/output voltage. Doing so may result in damage to the ECM's transistor. Use a ground other than ECM terminals, such as the ground.

TERMINAL NO.	WIRE COLOR	ITEM	CONDITION	DATA (DC Voltage)
32	R/G	ECM relay (Self shut-off)	**[Engine is running]** **[Ignition switch: OFF]** • For a few seconds after turning ignition switch OFF	0 - 1.0 V
			[Ignition switch: OFF] • More than a few seconds after turning ignition switch OFF	BATTERY VOLTAGE (11 - 14 V)
45	V	Mass air flow sensor	**[Engine is running]** • **Warm-up condition** • Idle speed	0.9 - 1.2 V
			[Engine is running] • **Warm-up condition** • Engine speed: 2,500 rpm	1.5 - 1.8 V
52	B/W	Sensor ground (Mass air flow sensor)	**[Engine is running]** • **Warm-up condition** • Idle speed	Approximately 0 V
105	G	Power supply for ECM	**[Ignition switch: ON]**	BATTERY VOLTAGE (11 - 14 V)

Diagnosis Procedure

INFOID:0000000005284642

1. INSPECTION START

Which malfunction (A or B) is duplicated?

A or B

A >> GO TO 3.
B >> GO TO 2.

2. CHECK INTAKE AIR LEAK

Check the following for connections.
- Air duct
- Vacuum hoses
- Intake air passage between air duct and intake manifold

OK or NG

OK >> GO TO 3.
NG >> Reconnect the parts.

3. CHECK GROUND CONNECTIONS

1. Turn ignition switch OFF.
2. Loosen and retighten ground screw on the body.
   Refer to EC-157, "Ground Inspection".

- ⇦ : Vehicle front
- Body ground (1)

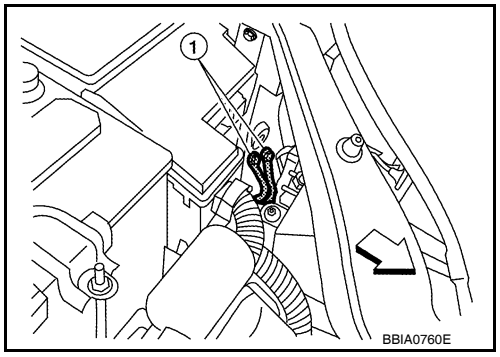

OK or NG

OK >> GO TO 4.
NG >> Repair or replace ground connections.

4. CHECK MAF SENSOR POWER SUPPLY CIRCUIT

1. Disconnect mass air flow (MAF) sensor (1) harness connector.
2. Turn ignition switch ON.

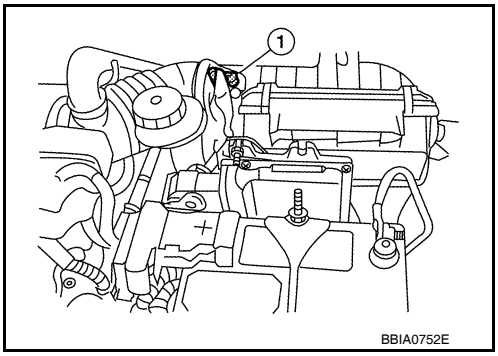

3. Check voltage between MAF sensor terminal 2 and ground with CONSULT-III or tester.

Voltage: Battery voltage

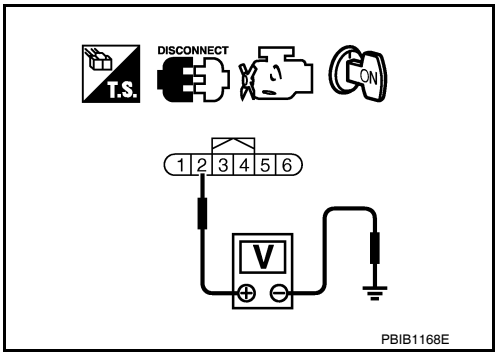

OK or NG

OK >> GO TO 6.
NG >> GO TO 5.

5. DETECT MALFUNCTIONING PART

Check the following.
- Harness connectors E17, F10
- Harness for open or short between mass air flow sensor and IPDM E/R
- Harness for open or short between mass air flow sensor and ECM

>> Repair open circuit or short to ground or short to power in harness or connectors.

6. CHECK MAF SENSOR GROUND CIRCUIT FOR OPEN AND SHORT

1. Turn ignition switch OFF.
2. Disconnect ECM harness connector.
3. Check harness continuity between MAF sensor terminal 3 and ECM terminal 52. Refer to Wiring Diagram.

Continuity should exist.

4. Also check harness for short to ground and short to power.

OK or NG

OK >> GO TO 7.
NG >> Repair open circuit or short to ground or short to power in harness or connectors.

7. CHECK MAF SENSOR INPUT SIGNAL CIRCUIT FOR OPEN AND SHORT

1. Check harness continuity between MAF sensor terminal 4 and ECM terminal 45. Refer to Wiring Diagram.

Continuity should exist.

2. Also check harness for short to ground and short to power.

OK or NG

OK >> GO TO 8.
NG >> Repair open circuit or short to ground or short or short to power in harness or connectors.

8. CHECK INTAKE AIR TEMPERATURE SENSOR

Refer to EC-221, "Component Inspection".

OK or NG

OK >> GO TO 9.
NG >> Replace mas air flow sensor (with intake air temperature sensor).

9. CHECK EVAP CONTROL SYSTEM PRESSURE SENSOR

Refer to EC-375, "Component Inspection".

OK or NG

OK >> GO TO 10.
NG >> Replace EVAP control system pressure sensor.

10. CHECK MASS AIR FLOW SENSOR

Refer to EC-191, "Component Inspection".

OK or NG

OK >> GO TO 11.
NG >> Replace mass air flow sensor.

11. CHECK INTERMITTENT INCIDENT

Perform EC-152.

>> **INSPECTION END**

Component Inspection

INFOID:0000000005284643

MASS AIR FLOW SENSOR

WITH CONSULT-III

1. Reconnect all harness connectors disconnected.
2. Start engine and warm it up to normal operating temperature.
3. Connect CONSULT-III and select “DATA MONITOR” mode.
4. Select “MAS A/F SE-B1” and check indication under the following conditions.

Condition	MAS A/F SE-B1 (V)
Ignition switch ON (Engine stopped.)	Approx 0.4
Idle (Engine is warmed-up to normal operating temperature.)	0.9 - 1.2
2,500 rpm (Engine is warmed-up to normal operating temperature.)	1.5 - 1.8
Idle to about 4,000 rpm	0.9 - 1.2 to 2.4*

*: Check for linear voltage rise in response to engine being increased to about 4,000 rpm.

5. If the voltage is out of specification, proceed the following.

a. Check for the cause of uneven air flow through mass air flow sensor. Refer to following.
   - Crushed air ducts
   - Malfunctioning seal of air cleaner element
   - Uneven dirt of air cleaner element
   - Improper specification of intake air system parts

b. If NG, repair or replace malfunctioning part and perform step 2 to 4 again.
   If OK, go to next step.

6. Turn ignition switch OFF.
7. Disconnect mass air flow sensor harness connector and reconnect it again.
8. Perform step 2 to 4 again.
9. If NG, clean or replace mass air flow sensor.

WITHOUT CONSULT-III

1. Reconnect all harness connectors disconnected.
2. Start engine and warm it up to normal operating temperature.

3. Check voltage between ECM terminal 45 (Mass air flow sensor signal) and ground.

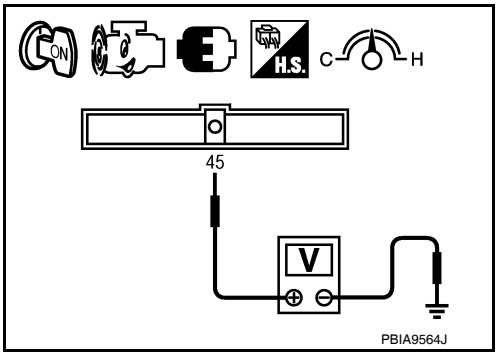

Condition	Voltage (V)
Ignition switch ON (Engine stopped.)	Approx 0.4
Idle (Engine is warmed-up to normal operating temperature.)	0.9 - 1.2
2,500 rpm (Engine is warmed-up to normal operating temperature.)	1.5 - 1.8
Idle to about 4,000 rpm	0.9 - 1.2 to 2.4*

*: Check for linear voltage rise in response to engine being increased to about 4,000 rpm.

4. If the voltage is out of specification, proceed the following.

a. Check for the cause of uneven air flow through mass air flow sensor. Refer to following.
   - Crushed air ducts
   - Malfunctioning seal of air cleaner element
   - Uneven dirt of air cleaner element
   - Improper specification of intake air system parts

b. If NG, repair or replace malfunctioning part and perform step 2 and 3 again.
   If OK, go to next step.

5. Turn ignition switch OFF.
6. Disconnect mass air flow sensor harness connector and reconnect it again.
7. Perform step 2 and 3 again.
8. If NG, clean or replace mass air flow sensor.

Removal and Installation

INFOID:0000000005284644

MASS AIR FLOW SENSOR

Refer to EM-16.

DTC P0102, P0103 MAF SENSOR

Component Description

INFOID:0000000005284645

The mass air flow sensor (1) is placed in the stream of intake air. It measures the intake flow rate by measuring a part of the entire intake flow. The mass air flow sensor controls the temperature of the hot wire to a certain amount. The heat generated by the hot wire is reduced as the intake air flows around it. The more air, the greater the heat loss.
Therefore, the electric current supplied to hot wire is changed to maintain the temperature of the hot wire as air flow increases. The ECM detects the air flow by means of this current change.

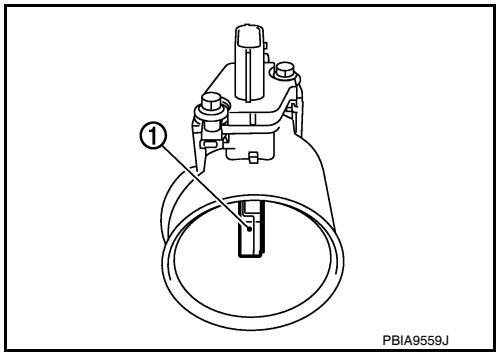

CONSULT-III Reference Value in Data Monitor Mode

INFOID:0000000005284646

Specification data are reference values.

Monitor item	Condition		Specification
MAS A/F SE-B1	See EC-144.		
CAL/LD VALUE	• Engine: After warming up • Shift lever: P or N (CVT), Neutral (M/T) • Air conditioner switch: OFF • No load	Idle	10% - 35%
		2,500 rpm	10% - 35%
MASS AIRFLOW	• Engine: After warming up • Shift lever: P or N (CVT), Neutral (M/T) • Air conditioner switch: OFF • No load	Idle	1.0 - 4.0 g·m/s
		2,500 rpm	4.0 - 10.0 g·m/s

On Board Diagnosis Logic

INFOID:0000000005284647

These self-diagnoses have the one trip detection logic.

DTC No.	Trouble diagnosis name	DTC detecting condition	Possible cause
P0102 0102	Mass air flow sensor circuit low input	An excessively low voltage from the sensor is sent to ECM.	• Harness or connectors (Mass air flow sensor circuit is open or shorted.) • Intake air leaks • Mass air flow sensor
P0103 0103	Mass air flow sensor circuit high input	An excessively high voltage from the sensor is sent to ECM.	• Harness or connectors (Mass air flow sensor circuit is open or shorted.) • Mass air flow sensor

FAIL-SAFE MODE

When the malfunction is detected, the ECM enters fail-safe mode and the MIL lights up.

Detected items	Engine operating condition in fail-safe mode
Mass air flow sensor circuit	Engine speed will not rise more than 2,400 rpm due to the fuel cut.

DTC Confirmation Procedure

INFOID:0000000005284648

NOTE:
If DTC Confirmation Procedure has been previously conducted, always turn ignition switch OFF and wait at least 10 seconds before conducting the next test.

PROCEDURE FOR DTC P0102

1. Start engine and wait at least 5 seconds.
2. Check DTC.
3. If DTC is detected, go to EC-196, "Diagnosis Procedure".

PROCEDURE FOR DTC P0103

1. Turn ignition switch ON and wait at least 5 seconds.
2. Check DTC.
3. If DTC is detected, go to EC-196, "Diagnosis Procedure".
   If DTC is not detected, go to next step.
4. Start engine and wait at least 5 seconds
5. Check DTC.
6. If DTC is detected, go to EC-196, "Diagnosis Procedure".

Wiring Diagram

INFOID:0000000005284649

EC-MAFS-01

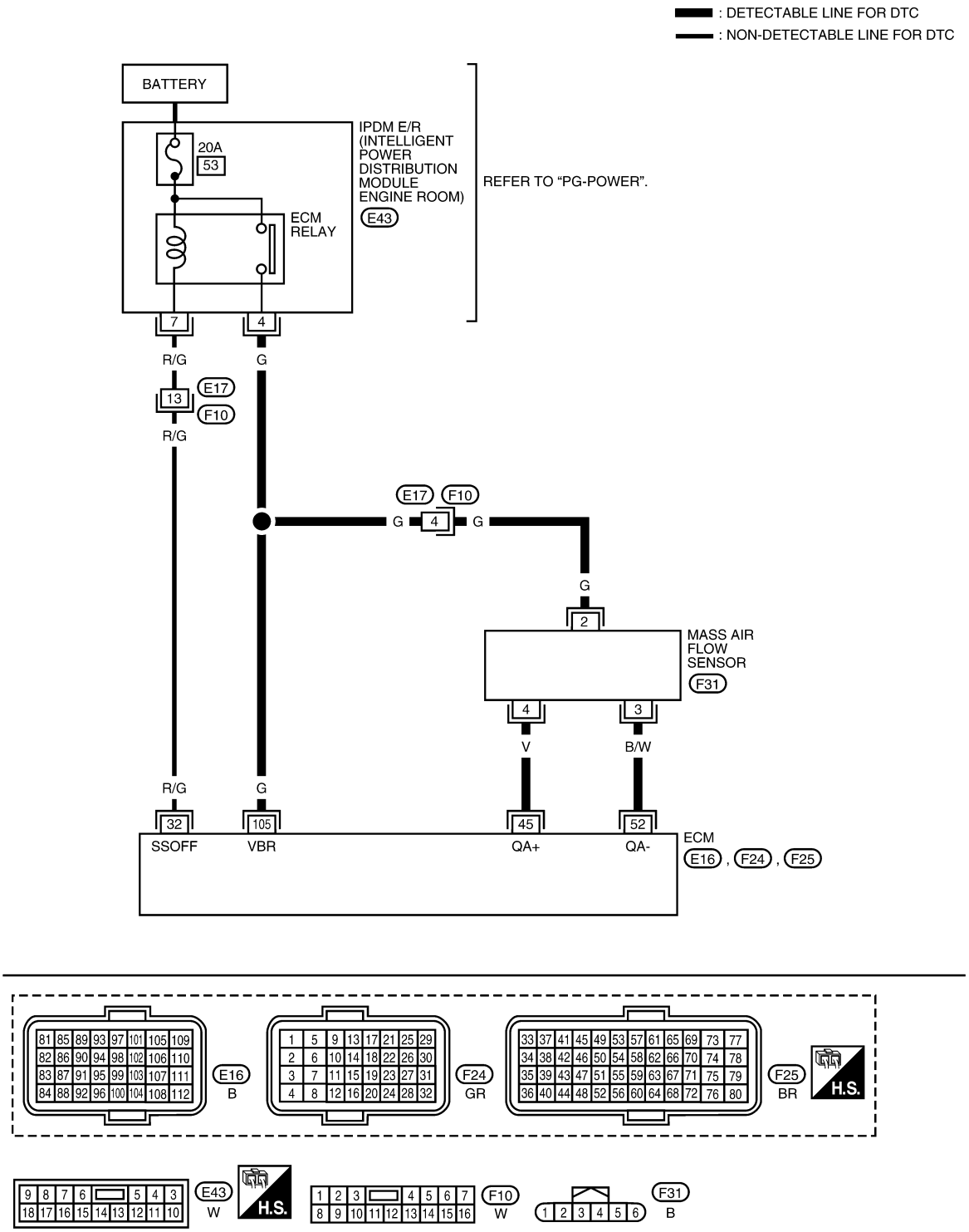

Specification data are reference values and are measured between each terminal and ground.

CAUTION:

Do not use ECM ground terminals when measuring input/output voltage. Doing so may result in damage to the ECM's transistor. Use a ground other than ECM terminals, such as the ground.

TERMINAL NO.	WIRE COLOR	ITEM	CONDITION	DATA (DC Voltage)
32	R/G	ECM relay (Self shut-off)	**[Engine is running]** **[Ignition switch: OFF]** • For a few seconds after turning ignition switch OFF	0 - 1.0 V
			[Ignition switch: OFF] • More than a few seconds after turning ignition switch OFF	BATTERY VOLTAGE (11 - 14 V)
45	V	Mass air flow sensor	**[Engine is running]** • **Warm-up condition** • Idle speed	0.9 - 1.2 V
			[Engine is running] • **Warm-up condition** • Engine speed: 2,500 rpm	1.5 - 1.8 V
52	B/W	Sensor ground (Mass air flow sensor)	**[Engine is running]** • **Warm-up condition** • Idle speed	Approximately 0 V
105	G	Power supply for ECM	**[Ignition switch: ON]**	BATTERY VOLTAGE (11 - 14 V)

Diagnosis Procedure

INFOID:0000000005284650

1. INSPECTION START

Which malfunction (P0102 or P0103) is duplicated?

P0102 or P0103

P0102 >> GO TO 2.
P0103 >> GO TO 3.

2. CHECK INTAKE SYSTEM

Check the following for connection.
- Air duct
- Vacuum hoses
- Intake air passage between air duct and intake manifold

OK or NG

OK >> GO TO 3.
NG >> Reconnect the parts.

3. CHECK GROUND CONNECTIONS

1. Turn ignition switch OFF.
2. Loosen and retighten ground screws on the body. Refer to EC-157, "Ground Inspection".

- ⇦ : Vehicle front
- Body ground (1)

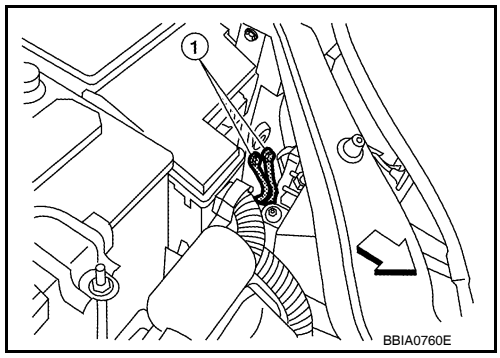

OK or NG

OK >> GO TO 4.
NG >> Repair or replace ground connections.

4. CHECK MAF SENSOR POWER SUPPLY CIRCUIT

1. Disconnect mass air flow (MAF) sensor (1) harness connector.
2. Turn ignition switch ON.

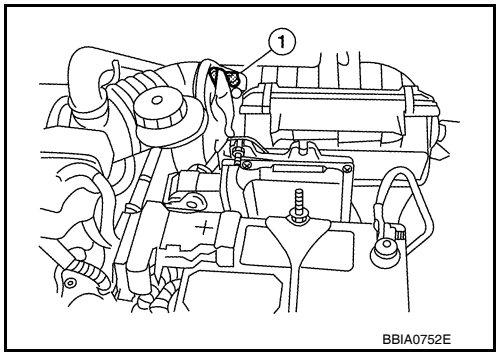

3. Check voltage between MAF sensor terminal 2 and ground with CONSULT-III or tester.

Voltage: Battery voltage

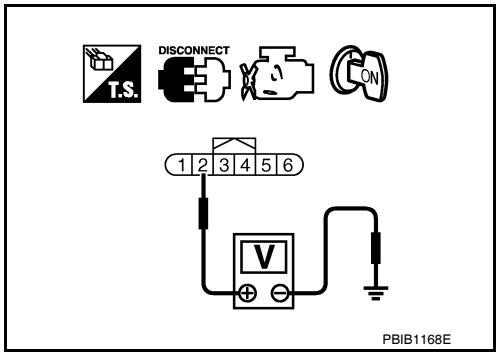

OK or NG

OK >> GO TO 6.
NG >> GO TO 5.

5. DETECT MALFUNCTIONING PART

Check the following.
- Harness connectors E17, F10
- Harness for open or short between mass air flow sensor and ECM
- Harness for open or short between mass air flow sensor and IPDM E/R

>> Repair open circuit or short to ground or short to power in harness or connectors.

6. CHECK MAF SENSOR GROUND CIRCUIT FOR OPEN AND SHORT

1. Turn ignition switch OFF.
2. Disconnect ECM harness connector.
3. Check harness continuity between MAF sensor terminal 3 and ECM terminal 52. Refer to Wiring Diagram.

Continuity should exist.

4. Also check harness for short to ground and short to power.

OK or NG

OK >> GO TO 7.
NG >> Repair open circuit or short to ground or short to power in harness or connectors.

7. CHECK MAF SENSOR INPUT SIGNAL CIRCUIT FOR OPEN AND SHORT

1. Check harness continuity between MAF sensor terminal 4 and ECM terminal 45. Refer to Wiring Diagram.

Continuity should exist.

2. Also check harness for short to ground and short to power.

OK or NG

OK >> GO TO 8.
NG >> Repair open circuit or short to ground or short to power in harness or connectors.

8. CHECK MASS AIR FLOW SENSOR

Refer to EC-198, "Component Inspection".

OK or NG

OK >> GO TO 9.
NG >> Replace mass air flow sensor.

9. CHECK INTERMITTENT INCIDENT

Refer to EC-152.

>> **INSPECTION END**

Component Inspection

INFOID:0000000005284651

MASS AIR FLOW SENSOR

WITH CONSULT-III

1. Reconnect all harness connectors disconnected.
2. Start engine and warm it up to normal operating temperature.
3. Connect CONSULT-III and select “DATA MONITOR” mode.
4. Select “MAS A/F SE-B1” and check indication under the following conditions.

Condition	MAS A/F SE-B1 (V)
Ignition switch ON (Engine stopped.)	Approx 0.4
Idle (Engine is warmed-up to normal operating temperature.)	0.9 - 1.2
2,500 rpm (Engine is warmed-up to normal operating temperature.)	1.5 - 1.8
Idle to about 4,000 rpm	0.9 - 1.2 to 2.4*

*: Check for linear voltage rise in response to engine being increased to about 4,000 rpm.

5. If the voltage is out of specification, proceed the following.

a. Check for the cause of uneven air flow through mass air flow sensor. Refer to following.
   - Crushed air ducts
   - Malfunctioning seal of air cleaner element
   - Uneven dirt of air cleaner element
   - Improper specification of intake air system parts

b. If NG, repair or replace malfunctioning part and perform step 2 to 4 again.
   If OK, go to next step.

6. Turn ignition switch OFF.
7. Disconnect mass air flow sensor harness connector and reconnect it again.
8. Perform step 2 to 4 again.
9. If NG, clean or replace mass air flow sensor.

WITHOUT CONSULT-III

1. Reconnect all harness connectors disconnected.
2. Start engine and warm it up to normal operating temperature.
3. Check voltage between ECM terminal 45 (Mass air flow sensor signal) and ground.

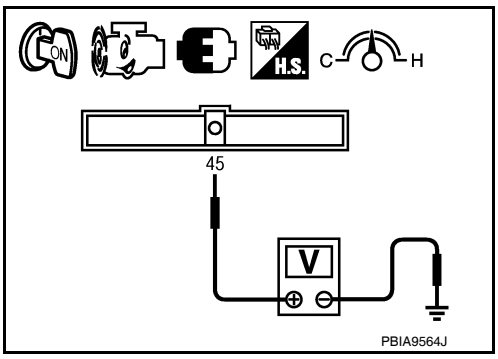

Condition	Voltage (V)
Ignition switch ON (Engine stopped.)	Approx 0.4
Idle (Engine is warmed-up to normal operating temperature.)	0.9 - 1.2
2,500 rpm (Engine is warmed-up to normal operating temperature.)	1.5 - 1.8
Idle to about 4,000 rpm	0.9 - 1.2 to 2.4*

*: Check for linear voltage rise in response to engine being increased to about 4,000 rpm.

4. If the voltage is out of specification, proceed the following.

a. Check for the cause of uneven air flow through mass air flow sensor. Refer to following.
   - Crushed air ducts
   - Malfunctioning seal of air cleaner element
   - Uneven dirt of air cleaner element
   - Improper specification of intake air system parts

b. If NG, repair or replace malfunctioning part and perform step 2 and 3 again.
   If OK, go to next step.

5. Turn ignition switch OFF.
6. Disconnect mass air flow sensor harness connector and reconnect it again.
7. Perform step 2 and 3 again.
8. If NG, clean or replace mass air flow sensor.

Removal and Installation

INFOID:0000000005284652

MASS AIR FLOW SENSOR

Refer to EM-16.

DTC P0112, P0113 IAT SENSOR

Component Description

INFOID:0000000005284653

The intake air temperature sensor is built-into mass air flow sensor (1). The sensor detects intake air temperature and transmits a signal to the ECM.
The temperature sensing unit uses a thermistor which is sensitive to the change in temperature. Electrical resistance of the thermistor decreases in response to the temperature rise.

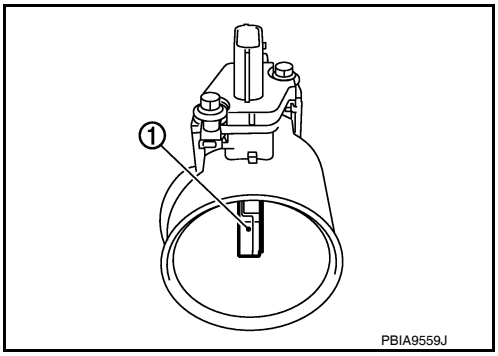

<Reference data>

Intake air temperature °C (°F)]	Voltage* (V)	Resistance (kΩ)
25 (77)	3.3	1.800 - 2.200
80 (176)	1.2	0.283 - 0.359

*: This data is reference value and is measured between ECM terminal 46 (Intake air temperature sensor) and ground.

CAUTION:
Do not use ECM ground terminals when measuring input/output voltage. Doing so may result in damage to the ECM's transistor. Use a ground other than ECM terminals, such as the ground.

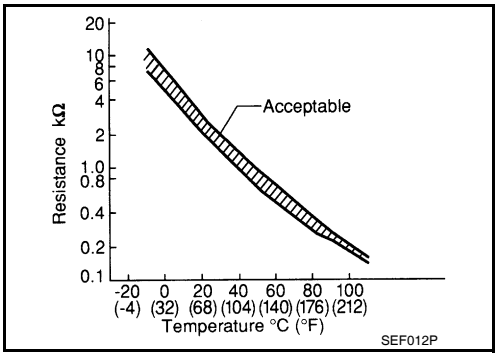

On Board Diagnosis Logic

INFOID:0000000005284654

DTC No.	Trouble diagnosis name	DTC detecting condition	Possible cause
P0112 0112	Intake air temperature sensor circuit low input	An excessively low voltage from the sensor is sent to ECM.	• Harness or connectors (Intake air temperature sensor circuit is open or shorted.) • Intake air temperature sensor
P0113 0113	Intake air temperature sensor circuit high input	An excessively high voltage from the sensor is sent to ECM.	

DTC Confirmation Procedure

INFOID:0000000005284655

NOTE:
If DTC Confirmation Procedure has been previously conducted, always turn ignition switch OFF and wait at least 10 seconds before conducting the next test.

1. Turn ignition switch ON and wait at least 5 seconds.
2. Check 1st trip DTC.
3. If 1st trip DTC is detected, go to EC-201, "Diagnosis Procedure".

Wiring Diagram

INFOID:0000000005284656

EC-IATS-01

: DETECTABLE LINE FOR DTC
: NON-DETECTABLE LINE FOR DTC

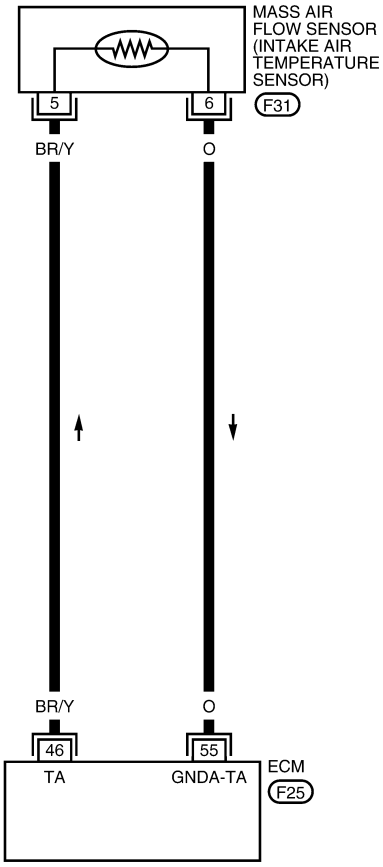

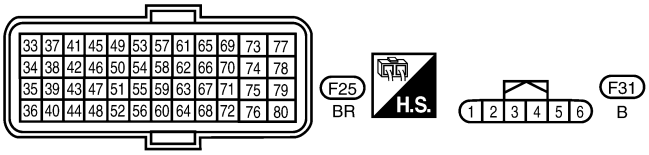

BBWA2875E

Diagnosis Procedure

INFOID:0000000005284657

1. CHECK GROUND CONNECTIONS

1. Turn ignition switch OFF.

2. Loosen and retighten ground screws on the body.
   Refer to EC-157, "Ground Inspection".
- ⇦ : Vehicle front
- Body ground (1)

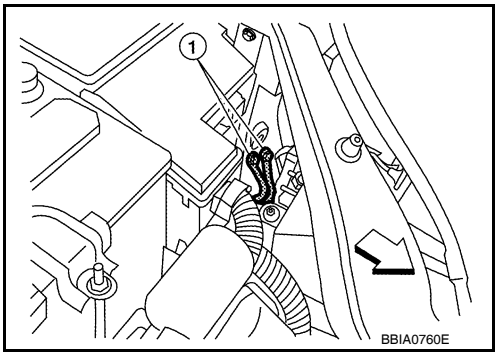

OK or NG

OK >> GO TO 2.
NG >> Repair or replace ground connections.

2. CHECK INTAKE AIR TEMPERATURE SENSOR POWER SUPPLY CIRCUIT

1. Disconnect mass air flow sensor (with intake air temperature sensor) (1) harness connector.
2. Turn ignition switch ON.

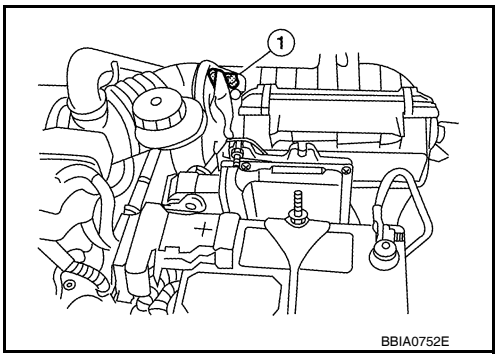

3. Check voltage between mass air flow sensor terminal 5 and ground with CONSULT-III or tester.

Voltage: Approximately 5 V

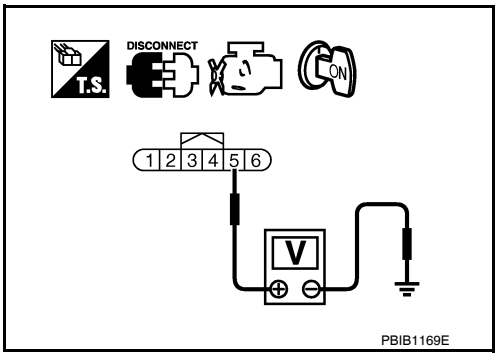

OK or NG

OK >> GO TO 3.
NG >> Repair open circuit or short to ground or short to power in harness or connectors.

3. CHECK INTAKE AIR TEMPERATURE SENSOR GROUND CIRCUIT FOR OPEN AND SHORT

1. Turn ignition switch OFF.
2. Disconnect ECM harness connector.
3. Check harness continuity between mass air flow sensor terminal 6 and ECM terminal 55.
   Refer to Wiring Diagram.

Continuity should exist.

4. Also check harness for short to ground and short to power.

OK or NG

OK >> GO TO 4.
NG >> Repair open circuit or short to ground or short to power in harness or connectors.

4. CHECK INTAKE AIR TEMPERATURE SENSOR

Refer to EC-203, "Component Inspection".

OK or NG

OK >> GO TO 5.
NG >> Replace mass air flow sensor (with intake air temperature sensor).

5. CHECK INTERMITTENT INCIDENT

Refer to EC-152.

>> **INSPECTION END**

Component Inspection

INFOID:0000000005284658

INTAKE AIR TEMPERATURE SENSOR

1. Check resistance between mass air flow sensor (1) terminals 5 and 6 under the following conditions.

Intake air temperature [°C (°F)]	Resistance (kΩ)
25 (77)	1.800 - 2.200

2. If NG, replace mass air flow sensor (with intake air temperature sensor).

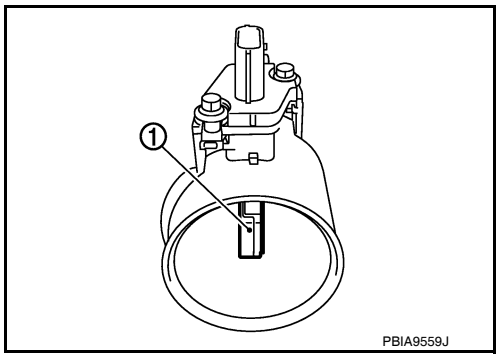

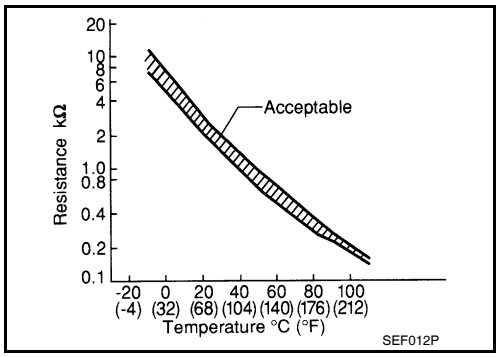

Removal and Installation

INFOID:0000000005284659

MASS AIR FLOW SENSOR

Refer to EM-16.

DTC P0116 ECT SENSOR

Component Description

INFOID:0000000005284660

The engine coolant temperature sensor is used to detect the engine coolant temperature. The sensor modifies a voltage signal from the ECM. The modified signal returns to the ECM as the engine coolant temperature input. The sensor uses a thermistor which is sensitive to the change in temperature. The electrical resistance of the thermistor decreases as temperature increases.

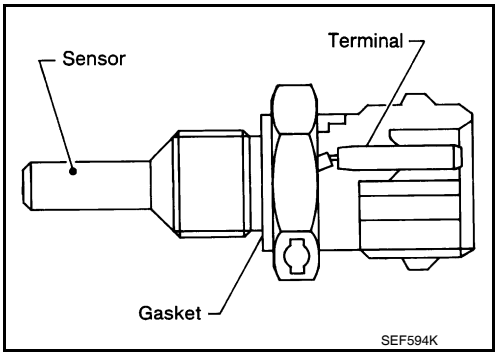

<Reference data>

Engine coolant temperature [°C (°F)]	Voltage* (V)	Resistance (kΩ)
–10 (14)	4.4	7.0 - 11.4
20 (68)	3.5	2.37 - 2.63
50 (122)	2.2	0.68 - 1.00
90 (194)	0.9	0.236 - 0.260

*: This data is reference value and is measured between ECM terminal 38 (Engine coolant temperature sensor) and ground.

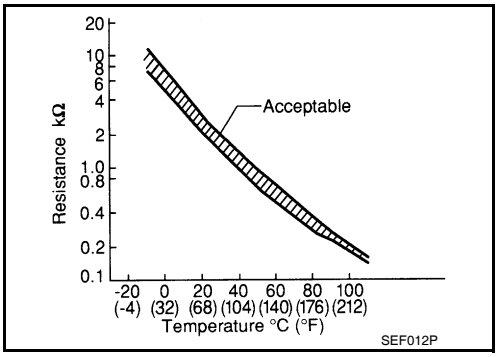

CAUTION:
Do not use ECM ground terminals when measuring input/output voltage. Doing so may result in damage to the ECM's transistor. Use a ground other than ECM terminals, such as the ground.

On Board Diagnosis Logic

INFOID:0000000005284661

NOTE:
If DTC P0116 is displayed with P0117 or P0118, first perform the trouble diagnosis for DTC P0117, P0118. Refer to EC-207.

DTC No.	Trouble diagnosis name	DTC detecting condition	Possible cause
P0116 0116	Engine coolant temperature sensor circuit range/performance	Engine coolant temperature signal from engine coolant temperature sensor does not fluctuate, even when some time has passed after starting the engine with pre-warming up condition.	• Harness or connectors (High or low resistance in the circuit) • Engine coolant temperature sensor

DTC Confirmation Procedure

INFOID:0000000005284662

NOTE:
If DTC Confirmation Procedure has been previously conducted, always turn ignition switch OFF and wait at least 10 seconds before conducting the next test.
TESTING CONDITION:
Before performing the following procedure, do not add fuel.

1. Start engine and warm it up to normal operating temperature.
2. Rev engine up to 2,000 rpm for more than10 minutes.
3. Move the vehicle to a cool place, then stop engine and turn ignition switch OFF.
4. Check resistance between “fuel level sensor unit and fuel pump” terminals 4 and 5.
5. Soak the vehicle until the resistance between “fuel level sensor unit and fuel pump” terminals 4 and 5 becomes 0.5 kΩ higher than the value measured before soaking.
   CAUTION:
   Never turn ignition switch ON during soaking time.

NOTE:
Soak time changes depending on ambient air temperature. It may take several hours.

6. Start engine and let it idle for 20 minutes.
7. Check 1st trip DTC.
8. If 1st trip DTC is detected, go to EC-205, "Diagnosis Procedure".

Diagnosis Procedure

INFOID:0000000005284663

1. CHECK GROUND CONNECTIONS

1. Turn ignition switch OFF.
2. Loosen and retighten ground screws on the body.
   Refer to EC-157, "Ground Inspection".

- ⇦ : Vehicle front
- Body ground (1)

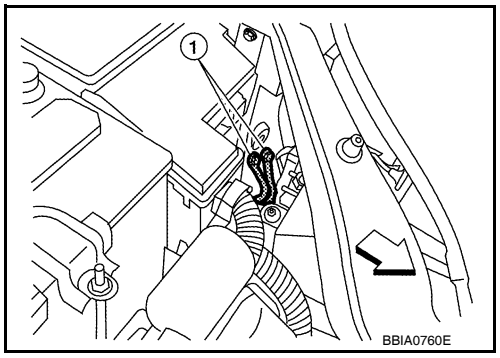

OK or NG

OK >> GO TO 2.
NG >> Repair or replace ground connections.

2. CHECK ENGINE COOLANT TEMPERATURE SENSOR

Refer to EC-205, "Component Inspection".

OK or NG

OK >> GO TO 3.
NG >> Replace engine coolant temperature sensor.

3. CHECK INTERMITTENT INCIDENT

Refer to EC-152.
Refer to EC-209, "Wiring Diagram".

>> **INSPECTION END**

Component Inspection

INFOID:0000000005284664

ENGINE COOLANT TEMPERATURE SENSOR

1. Check resistance between engine coolant temperature sensor terminals 1 and 2 as shown in the figure.

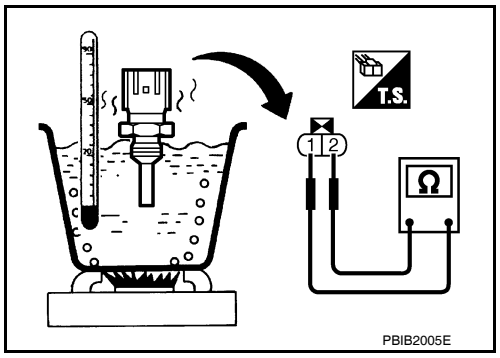

Temperature [°C (°F)]	Resistance (kΩ)
20 (68)	2.37 - 2.63
50 (122)	0.68 - 1.00
90 (194)	0.236 - 0.260

2. If NG, replace engine coolant temperature sensor.

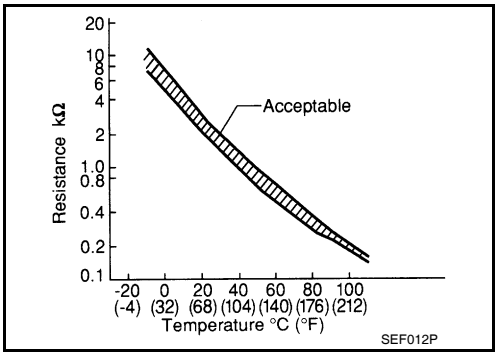

Removal and Installation

INFOID:0000000005284665

ENGINE COOLANT TEMPERATURE SENSOR
Refer to EM-65.

DTC P0117, P0118 ECT SENSOR

Component Description

INFOID:0000000005284666

The engine coolant temperature sensor is used to detect the engine coolant temperature. The sensor modifies a voltage signal from the ECM. The modified signal returns to the ECM as the engine coolant temperature input. The sensor uses a thermistor which is sensitive to the change in temperature. The electrical resistance of the thermistor decreases as temperature increases.

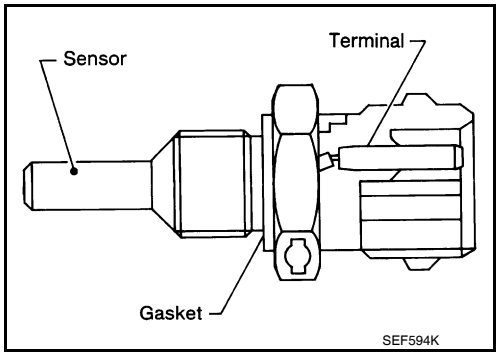

<Reference data>

Engine coolant temperature [°C (°F)]	Voltage* (V)	Resistance (kΩ)
–10 (14)	4.4	7.0 - 11.4
20 (68)	3.5	2.37 - 2.63
50 (122)	2.2	0.68 - 1.00
90 (194)	0.9	0.236 - 0.260

*: This data is reference value and is measured between ECM terminal 38 (Engine coolant temperature sensor) and ground.

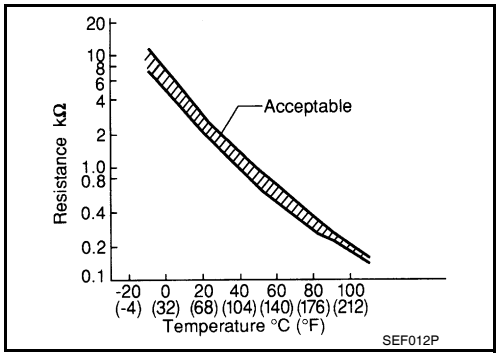

CAUTION:

Do not use ECM ground terminals when measuring input/output voltage. Doing so may result in damage to the ECM's transistor. Use a ground other than ECM terminals, such as the ground.

On Board Diagnosis Logic

INFOID:0000000005284667

These self-diagnoses have the one trip detection logic.

DTC No.	Trouble Diagnosis Name	DTC Detecting Condition	Possible Cause
P0117 0117	Engine coolant temperature sensor circuit low input	An excessively low voltage from the sensor is sent to ECM.	• Harness or connectors (Engine coolant temperature sensor circuit is open or shorted.) • Engine coolant temperature sensor
P0118 0118	Engine coolant temperature sensor circuit high input	An excessively high voltage from the sensor is sent to ECM.	

FAIL-SAFE MODE

When the malfunction is detected, the ECM enters fail-safe mode and the MIL lights up.

Detected items	Engine operating condition in fail-safe mode	
Engine coolant temperature sensor circuit	Engine coolant temperature will be determined by ECM based on the following condition. CONSULT-III displays the engine coolant temperature decided by ECM.	
	Condition	Engine coolant temperature decided (CONSULT-III display)
	Just as ignition switch is turned ON or START	40°C (104°F)
	Approx 4 minutes or more after engine starting.	80°C (176°F)
	Except as shown above	40 - 80°C (104 - 176°F) (Depends on the time)
	When the fail-safe system for engine coolant temperature sensor is activated, the cooling fan operates while engine is running.	

DTC Confirmation Procedure

INFOID:0000000005284668

NOTE:
If DTC Confirmation Procedure has been previously conducted, always turn ignition switch OFF and wait at least 10 seconds before conducting the next test.

1. Turn ignition switch ON and wait at least 5 seconds.
2. Check DTC.
3. If DTC is detected, go to EC-209, "Diagnosis Procedure".

Wiring Diagram

INFOID:0000000005284669

EC-ECTS-01

: DETECTABLE LINE FOR DTC
: NON-DETECTABLE LINE FOR DTC

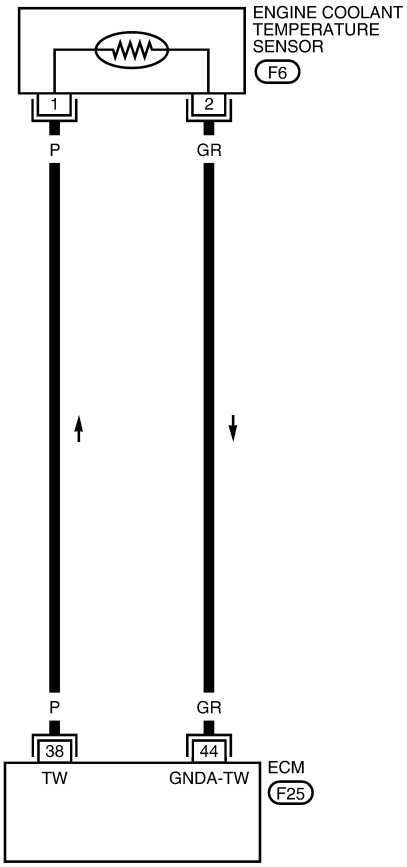

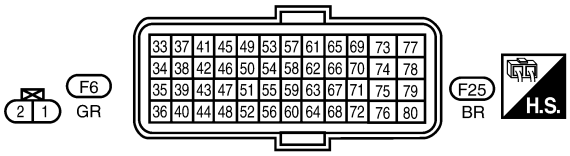

BBWA2876E

Diagnosis Procedure

INFOID:0000000005284670

1. CHECK GROUND CONNECTIONS

1. Turn ignition switch OFF.

2. Loosen and retighten ground screws on the body.
   Refer to EC-157, "Ground Inspection".
- ⇦ : Vehicle front
- Body ground (1)

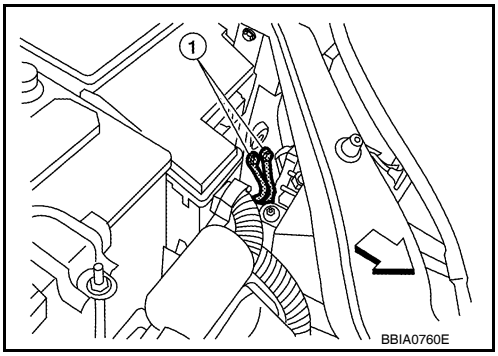

OK or NG

OK >> GO TO 2.
NG >> Repair or replace ground connections.

2. CHECK ECT SENSOR POWER SUPPLY CIRCUIT

1. Disconnect engine coolant temperature (ECT) sensor (1) harness connector.
- ⇦: Vehicle front
2. Turn ignition switch ON.

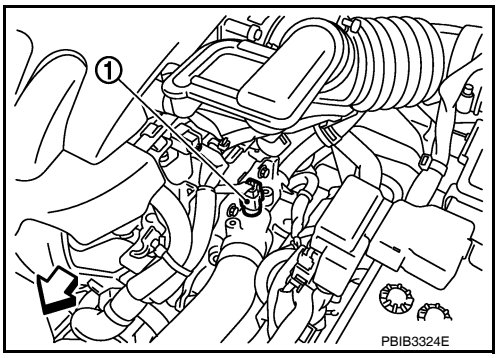

3. Check voltage between ECT sensor terminal 1 and ground with CONSULT-III or tester.

Voltage: Approximately 5 V

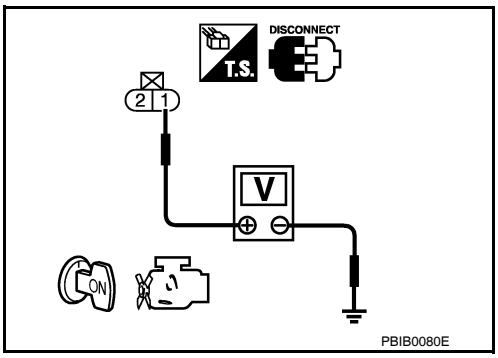

OK or NG

OK >> GO TO 3.
NG >> Repair open circuit or short to ground or short to power in harness or connectors.

3. CHECK ECT SENSOR GROUND CIRCUIT FOR OPEN AND SHORT

1. Turn ignition switch OFF.
2. Disconnect ECM harness connector.
3. Check harness continuity between ECM terminal 44 and ECT sensor terminal 2.
   Refer to Wiring Diagram.

Continuity should exist.

4. Also check harness for short to ground and short to power.

OK or NG

OK >> GO TO 4.
NG >> Repair open circuit or short to ground or short to power in harness or connectors.

4. CHECK ENGINE COOLANT TEMPERATURE SENSOR

Refer to EC-211, "Component Inspection".

OK or NG

OK >> GO TO 5.
NG >> Replace engine coolant temperature sensor.

5. CHECK INTERMITTENT INCIDENT

Refer to EC-152.

>> **INSPECTION END**

Component Inspection

INFOID:0000000005284671

ENGINE COOLANT TEMPERATURE SENSOR

1. Check resistance between engine coolant temperature sensor terminals 1 and 2 as shown in the figure.

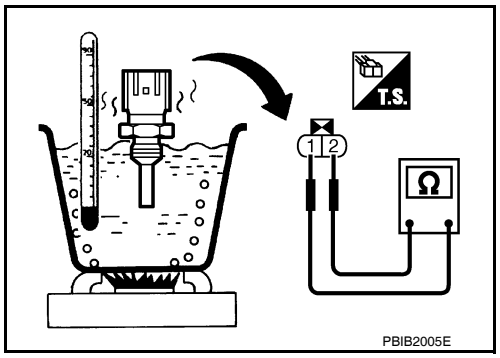

Temperature [°C (°F)]	Resistance (kΩ)
20 (68)	2.37 - 2.63
50 (122)	0.68 - 1.00
90 (194)	0.236 - 0.260

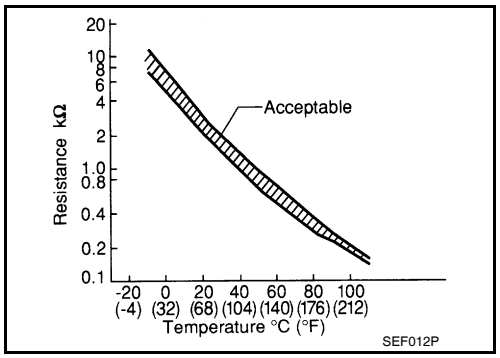

2. If NG, replace engine coolant temperature sensor.

Removal and Installation

INFOID:0000000005284672

ENGINE COOLANT TEMPERATURE SENSOR

Refer to EM-65.

DTC P0122, P0123 TP SENSOR

Component Description

INFOID:0000000005284673

Electric throttle control actuator consists of throttle control motor, throttle position sensor, etc. The throttle position sensor responds to the throttle valve movement.
The throttle position sensor has two sensors. These sensors are a kind of potentiometers which transform the throttle valve position into output voltage, and emit the voltage signal to the ECM. In addition, these sensors detect the opening and closing speed of the throttle valve and feed the voltage signals to the ECM. The ECM judges the current opening angle of the throttle valve from these signals and the ECM controls the throttle control motor to make the throttle valve opening angle properly in response to driving condition.

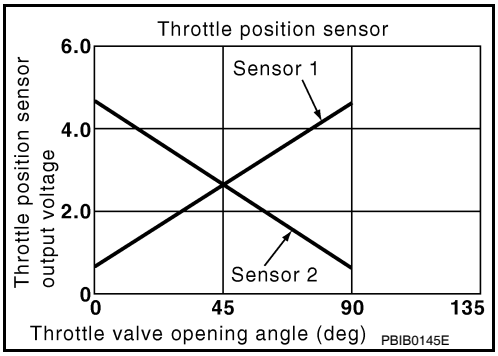

CONSULT-III Reference Value in Data Monitor Mode

INFOID:0000000005284674

Specification data are reference values.

Monitor item	Condition		Specification
TP SEN 1-B1 TP SEN 2-B1*	• Ignition switch: ON (Engine stopped) • Shift lever: D (CVT), 1st (M/T)	Accelerator pedal: Fully released	More than 0.36 V
		Accelerator pedal: Fully depressed	Less than 4.75 V

*: Throttle position sensor 2 signal is converted by ECM internally. Thus, it differs from ECM terminal voltage signal.

On Board Diagnosis Logic

INFOID:0000000005284675

These self-diagnoses have the one trip detection logic.
NOTE:
If DTC P0122 or P0123 is displayed with DTC P0643, first perform the trouble diagnosis for DTC P0643. Refer to EC-424.

DTC No.	Trouble diagnosis name	DTC detecting condition	Possible cause
P0122 0122	Throttle position sensor 2 circuit low input	An excessively low voltage from the TP sensor 2 is sent to ECM.	• Harness or connectors (TP sensor 2 circuit is open or shorted.) • Electric throttle control actuator (TP sensor 2)
P0123 0123	Throttle position sensor 2 circuit high input	An excessively high voltage from the TP sensor 2 is sent to ECM.	

FAIL-SAFE MODE

When the malfunction is detected, ECM enters fail-safe mode and the MIL lights up.

Engine operation condition in fail-safe mode
The ECM controls the electric throttle control actuator in regulating the throttle opening in order for the idle position to be within +10 degrees. The ECM regulates the opening speed of the throttle valve to be slower than the normal condition. So, the acceleration will be poor.

DTC Confirmation Procedure

INFOID:0000000005284676

NOTE:
If DTC Confirmation Procedure has been previously conducted, always turn ignition switch OFF and wait at least 10 seconds before conducting the next test.
TESTING CONDITION:
Before performing the following procedure, confirm that battery voltage is more than 8 V at idle.

1. Start engine and let it idle for 1 second.
2. Check DTC.
3. If DTC is detected, go to EC-214, "Diagnosis Procedure".

Wiring Diagram

INFOID:0000000005284677

EC-TPS2-01

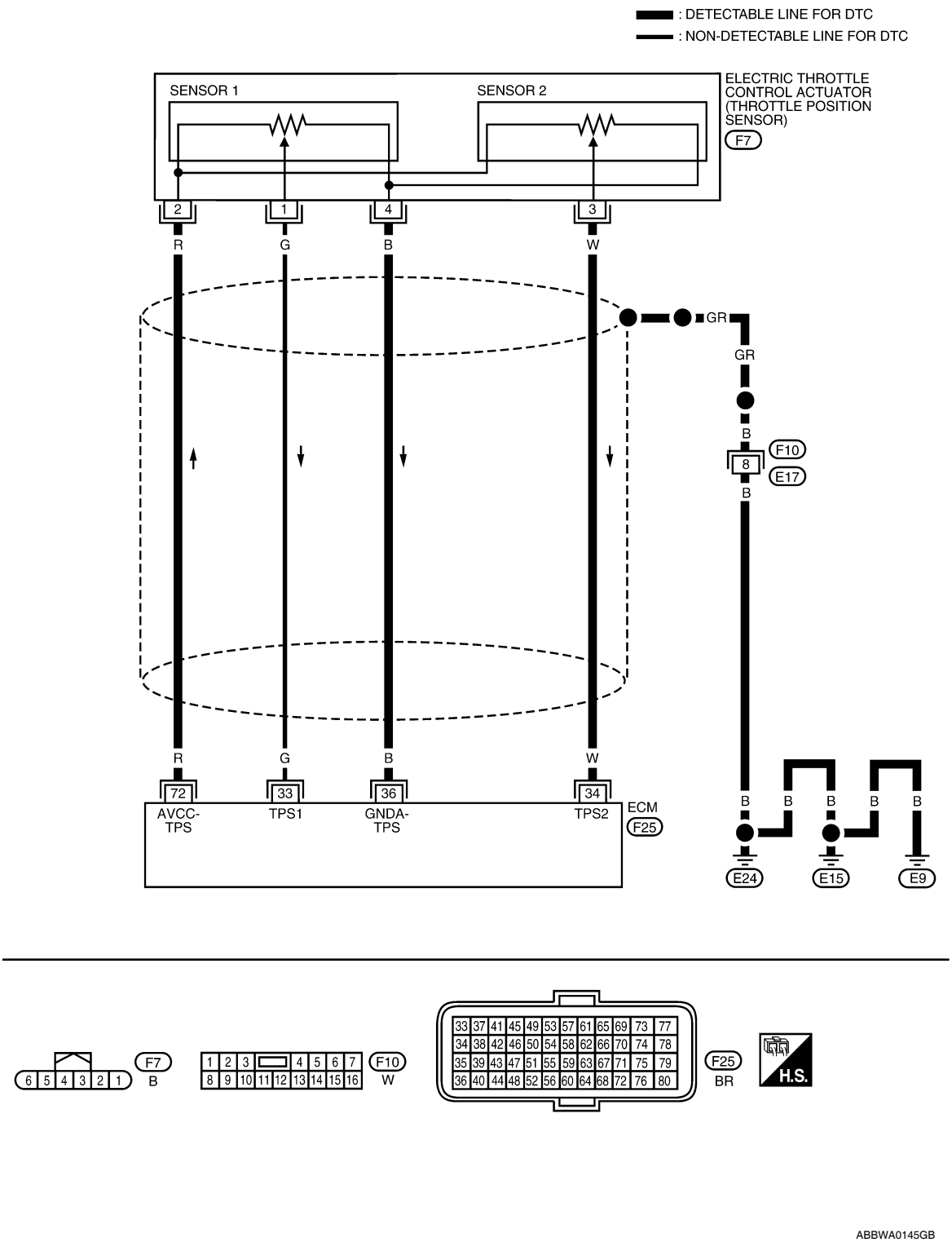

Specification data are reference values and are measured between each terminal and ground.

CAUTION:

Do not use ECM ground terminals when measuring input/output voltage. Doing so may result in damage to the ECM's transistor. Use a ground other than ECM terminals, such as the ground.

TERMINAL NO.	WIRE COLOR	ITEM	CONDITION	DATA (DC Voltage)
33	G	Throttle position sensor 1	**[Ignition switch: ON]** • Engine stopped • Shift lever: D (CVT), 1st (M/T) • Accelerator pedal: Fully released	More than 0.36 V
			[Ignition switch: ON] • Engine stopped • Shift lever: D (CVT), 1st (M/T) • Accelerator pedal: Fully depressed	Less than 4.75 V
34	W	Throttle position sensor 2	**[Ignition switch: ON]** • Engine stopped • Shift lever: D (CVT), 1st (M/T) • Accelerator pedal: Fully released	Less than 4.75 V
			[Ignition switch: ON] • Engine stopped • Shift lever: D (CVT), 1st (M/T) • Accelerator pedal: Fully depressed	More than 0.36 V
36	B	Sensor ground (Throttle position sensor)	**[Engine is running]** • **Warm-up condition** • Idle speed	Approximately 0 V
72	R	Sensor power supply (Throttle position sensor)	**[Ignition switch: ON]**	Approximately 5 V

Diagnosis Procedure

INFOID:0000000005284678

1. CHECK GROUND CONNECTIONS

1. Turn ignition switch OFF.
2. Loosen and retighten ground screws on the body.
   Refer to EC-157, "Ground Inspection".

- ⇦ : Vehicle front
- Body ground (1)

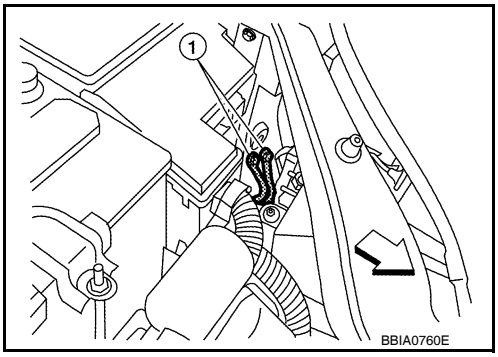

OK or NG

OK >> GO TO 2.
NG >> Repair or replace ground connections.

2. CHECK THROTTLE POSITION SENSOR 2 POWER SUPPLY CIRCUIT

1. Disconnect electric throttle control actuator (1) harness connector.
2. Turn ignition switch ON.

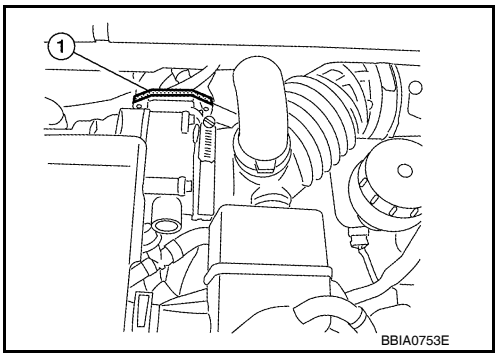

3. Check voltage between electric throttle control actuator terminal 2 and ground with CONSULT-III or tester.

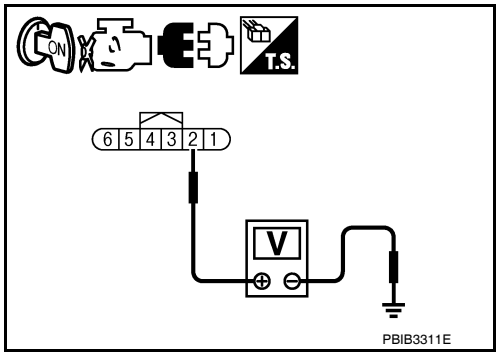

Voltage: Approximately 5 V

OK or NG

OK >> GO TO 3.
NG >> Repair open circuit or short to ground or short to power in harness or connectors.

3. CHECK THROTTLE POSITION SENSOR 2 GROUND CIRCUIT FOR OPEN AND SHORT

1. Turn ignition switch OFF.
2. Disconnect ECM harness connector.
3. Check harness continuity between electric throttle control actuator terminal 4 and ECM terminal 36. Refer to Wiring Diagram.

Continuity should exist.

4. Also check harness for short to ground and short to power.

OK or NG

OK >> GO TO 4.
NG >> Repair open circuit or short to ground or short to power in harness or connectors.

4. CHECK THROTTLE POSITION SENSOR 2 INPUT SIGNAL CIRCUIT FOR OPEN AND SHORT

1. Check harness continuity between ECM terminal 34 and electric throttle control actuator terminal 3. Refer to Wiring Diagram.

Continuity should exist.

2. Also check harness for short to ground and short to power.

OK or NG

OK >> GO TO 5.
NG >> Repair open circuit or short to ground or short to power in harness or connectors.

5. CHECK THROTTLE POSITION SENSOR

Refer to EC-215, "Component Inspection".

OK or NG

OK >> GO TO 7.
NG >> GO TO 6.

6. REPLACE ELECTRIC THROTTLE CONTROL ACTUATOR

1. Replace the electric throttle control actuator.
2. Perform EC-99, "Throttle Valve Closed Position Learning".
3. Perform EC-99, "Idle Air Volume Learning".

>> **INSPECTION END**

7. CHECK INTERMITTENT INCIDENT

Refer to EC-152.

>> **INSPECTION END**

Component Inspection

INFOID:0000000005284679

THROTTLE POSITION SENSOR

1. Reconnect all harness connectors disconnected.

2. Perform EC-99, "Throttle Valve Closed Position Learning".
3. Turn ignition switch ON.
4. Set shift lever to D position (CVT) or 1st position (M/T).
5. Check voltage between ECM terminals 33 (TP sensor 1 signal), 34 (TP sensor 2 signal) and ground under the following conditions.

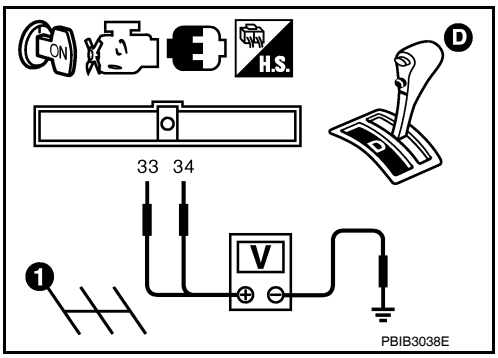

Terminal	Accelerator pedal	Voltage
33 (Throttle position sensor 1)	Fully released	More than 0.36 V
	Fully depressed	Less than 4.75 V
34 (Throttle position sensor 2)	Fully released	Less than 4.75 V
	Fully depressed	More than 0.36 V

6. If NG, replace electric throttle control actuator and go to the next step.
7. Perform EC-99, "Throttle Valve Closed Position Learning".
8. Perform EC-99, "Idle Air Volume Learning".

Removal and Installation

INFOID:0000000005284680

ELECTRIC THROTTLE CONTROL ACTUATOR

Refer to EM-18.

DTC P0125 ECT SENSOR

Component Description

INFOID:0000000005284681

The engine coolant temperature sensor is used to detect the engine coolant temperature. The sensor modifies a voltage signal from the ECM. The modified signal returns to the ECM as the engine coolant temperature input. The sensor uses a thermistor which is sensitive to the change in temperature. The electrical resistance of the thermistor decreases as temperature increases.

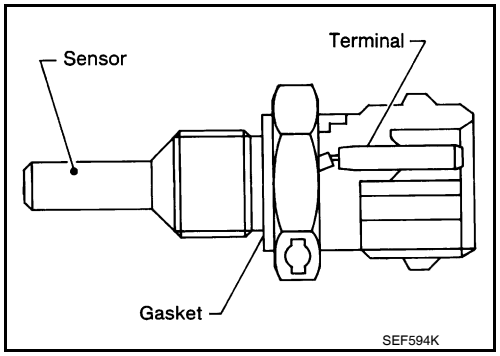

<Reference data>

Engine coolant temperature [°C (°F)]	Voltage* (V)	Resistance (kΩ)
–10 (14)	4.4	7.0 - 11.4
20 (68)	3.5	2.37 - 2.63
50 (122)	2.2	0.68 - 1.00
90 (194)	0.9	0.236 - 0.260

*: This data is reference value and is measured between ECM terminal 38 (engine coolant temperature sensor) and ground.

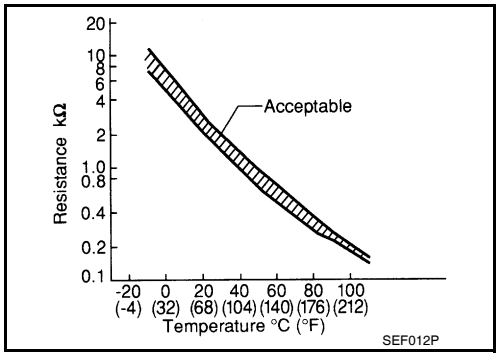

CAUTION:
Do not use ecm ground terminals when measuring input/output voltage. Doing so may result in damage to the ECM's transistor. Use a ground other than ECM terminals, such as the ground.

On Board Diagnosis Logic

INFOID:0000000005284682

NOTE:
- If DTC P0125 is displayed with P0117 or P0118, first perform the trouble diagnosis for DTC P0117 or P0118. Refer to EC-207.
- If DTC P0125 is displayed with P0116, first perform the trouble diagnosis for DTC P0116. Refer to EC-204.

DTC No.	Trouble diagnosis name	DTC detecting condition	Possible cause
P0125 0125	Insufficient engine coolant temperature for closed loop fuel control	• Voltage sent to ECM from the sensor is not practical, even when some time has passed after starting the engine. • Engine coolant temperature is insufficient for closed loop fuel control.	• Harness or connectors (High resistance in the circuit) • Engine coolant temperature sensor • Thermostat

DTC Confirmation Procedure

INFOID:0000000005284683

CAUTION:
Be careful not to overheat engine.
NOTE:
If DTC Confirmation Procedure has been previously conducted, always turn ignition switch OFF and wait at least 10 seconds before conducting the next test.

WITH CONSULT-III

1. Turn ignition switch ON.
2. Select “DATA MONITOR” mode with CONSULT-III.
3. Check that “COOLAN TEMP/S” is above –4°C (25°F).
   If it is above –4°C (25°F), the test result will be OK.

If it is below –4°C (25°F), go to following step.

4. Start engine and run it for 65 minutes at idle speed.
   If "COOLAN TEMP/S" increases to more than –4°C (25°F) within 65 minutes, stop engine because the test result will be OK.
5. Check 1st trip DTC.
6. If 1st trip DTC is detected, go to EC-218, "Diagnosis Procedure".

WITH GST

Follow the procedure "WITH CONSULT-III" above.

Diagnosis Procedure

INFOID:0000000005284684

1. CHECK GROUND CONNECTIONS

1. Turn ignition switch OFF.
2. Loosen and retighten ground screws on the body.
   Refer to EC-157, "Ground Inspection".

- ⇦ : Vehicle front
- Body ground (1)

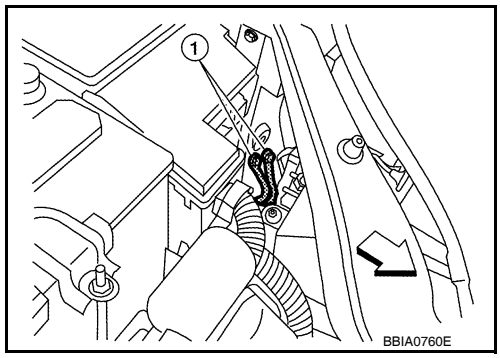

OK or NG

OK >> GO TO 2.
NG >> Repair or replace ground connections.

2. CHECK ENGINE COOLANT TEMPERATURE SENSOR

Refer to EC-218, "Component Inspection".

OK or NG

OK >> GO TO 3.
NG >> Replace engine coolant temperature sensor.

3. CHECK THERMOSTAT OPERATION

When the engine is cold [lower than 70°C (158°F)] condition, grasp lower radiator hose and confirm the engine coolant does not flow.

OK or NG

OK >> GO TO 4.
NG >> Repair or replace thermostat. Refer to CO-21.

4. CHECK INTERMITTENT INCIDENT

Refer to EC-152.
Refer to EC-209, "Wiring Diagram".

>> **INSPECTION END**

Component Inspection

INFOID:0000000005284685

ENGINE COOLANT TEMPERATURE SENSOR

1. Check resistance between engine coolant temperature sensor terminals 1 and 2 as shown in the figure.

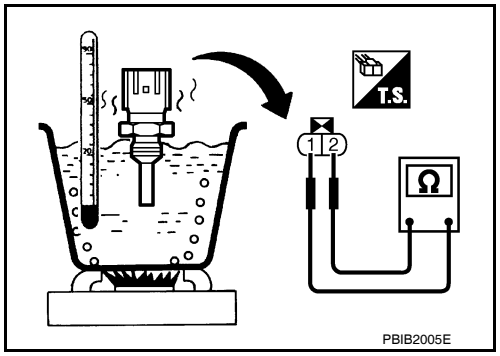

Temperature [°C (°F)]	Resistance (kΩ)
20 (68)	2.37 - 2.63
50 (122)	0.68 - 1.00
90 (194)	0.236 - 0.260

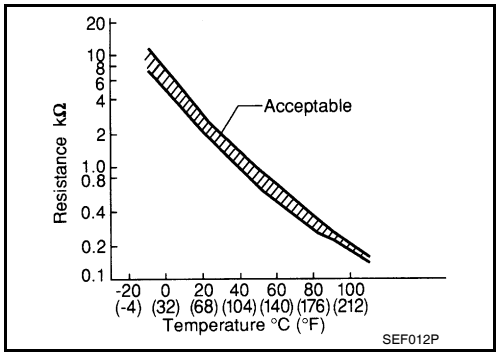

2. If NG, replace engine coolant temperature sensor.

Removal and Installation

INFOID:0000000005284686

ENGINE COOLANT TEMPERATURE SENSOR

Refer to EM-65.

DTC P0127 IAT SENSOR

Component Description

INFOID:0000000005284687

The intake air temperature sensor is built into mass air flow sensor (1). The sensor detects intake air temperature and transmits a signal to the ECM.
The temperature sensing unit uses a thermistor which is sensitive to the change in temperature. Electrical resistance of the thermistor decreases in response to the temperature rise.

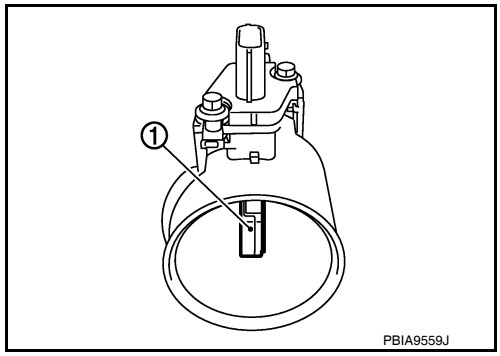

<Reference data>

Intake air temperature [°C (°F)]	Voltage* (V)	Resistance (kΩ)
25 (77)	3.3	1.800 - 2.200
80 (176)	1.2	0.283 - 0.359

*: This data is reference value and is measured between ECM terminal 46 (Intake air temperature sensor) and ground.

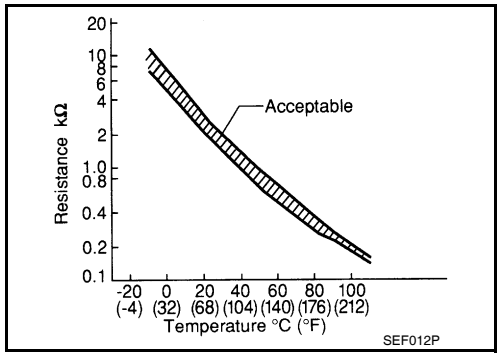

CAUTION:
Do not use ECM ground terminals when measuring input/output voltage. Doing so may result in damage to the ECM's transistor. Use a ground other than ECM terminals, such as the ground.

On Board Diagnosis Logic

INFOID:0000000005284688

DTC No.	Trouble diagnosis name	DTC detecting condition	Possible cause
P0127 0127	Intake air temperature too high	Rationally incorrect voltage from the sensor is sent to ECM, compared with the voltage signal from engine coolant temperature sensor.	• Harness or connectors (Intake temperature sensor circuit is open or shorted) • Intake air temperature sensor

DTC Confirmation Procedure

INFOID:0000000005284689

CAUTION:
Always drive vehicle at a safe speed.
NOTE:
If DTC Confirmation Procedure has been previously conducted, always turn ignition switch OFF and wait at least 10 seconds before conducting the next test.
TESTING CONDITION:
This test may be conducted with the drive wheels lifted in the shop or by driving the vehicle. If a road test is expected to be easier, it is unnecessary to lift the vehicle.

WITH CONSULT-III

1. Wait until engine coolant temperature is less than 96°C (205°F)

a. Turn ignition switch ON.
b. Select “DATA MONITOR” mode with CONSULT-III.
c. Check the engine coolant temperature.
d. If the engine coolant temperature is not less than 96°C (205°F), turn ignition switch OFF and cool down engine.
   • Perform the following steps before engine coolant temperature is above 96°C (205°F).

2. Turn ignition switch ON.
3. Select “DATA MONITOR” mode with CONSULT-III.
4. Start engine.
5. Hold vehicle speed at more than 70 km/h (43 MPH) for 100 consecutive seconds.
6. Check 1st trip DTC.
7. If 1st trip DTC is detected, go to EC-221, "Diagnosis Procedure".

WITH GST
Follow the procedure “With CONSULT-III” above.

Diagnosis Procedure

INFOID:0000000005284690

1. CHECK GROUND CONNECTIONS

1. Turn ignition switch OFF.
2. Loosen and retighten ground screws on the body.
   Refer to EC-157, "Ground Inspection".

- ⇦ : Vehicle front
- Body ground (1)

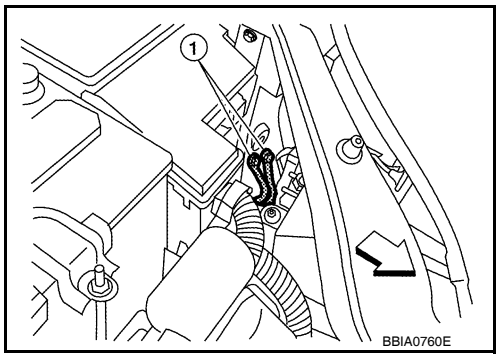

OK or NG

OK >> GO TO 2.
NG >> Repair or replace ground connections.

2. CHECK INTAKE AIR TEMPERATURE SENSOR

Refer to EC-221, "Component Inspection".

OK or NG

OK >> GO TO 3.
NG >> Replace mass air flow sensor (with intake air temperature sensor).

3. CHECK INTERMITTENT INCIDENT

Refer to EC-152.
Refer to EC-201, "Wiring Diagram".

>> **INSPECTION END**

Component Inspection

INFOID:0000000005284691

INTAKE AIR TEMPERATURE SENSOR

1. Check resistance between intake air temperature sensor (1) terminals 5 and 6 under the following conditions.

Intake air temperature [°C (°F)]	Resistance (kΩ)
25 (77)	1.800 - 2.200

2. If NG, replace mass air flow sensor (with intake air temperature sensor).

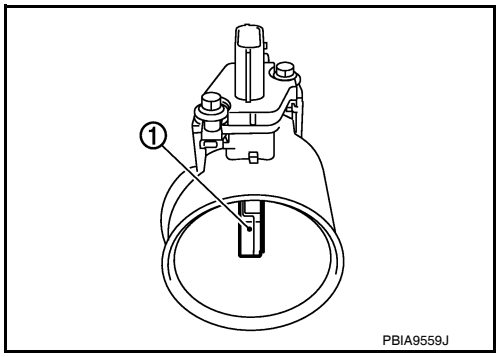

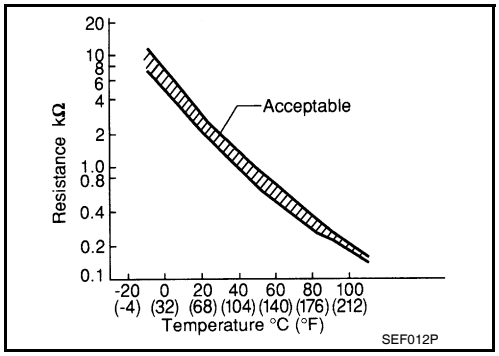

Removal and Installation

INFOID:0000000005284692

MASS AIR FLOW SENSOR
Refer to EM-16.

DTC P0128 THERMOSTAT FUNCTION

On Board Diagnosis Logic

INFOID:0000000005284693

NOTE:
If DTC P0128 is displayed with DTC P0300, P0301, P0302, P0303 or P0304, first perform the trouble diagnosis for DTC P0300, P0301, P0302, P0303, P0304. Refer to EC-307, "DTC Confirmation Procedure".

Engine coolant temperature has not risen enough to open the thermostat even though the engine has run long enough. This is due to a leak in the seal or the thermostat stuck open.

DTC No.	Trouble diagnosis name	DTC detecting condition	Possible cause
P0128 0128	Thermostat function	The engine coolant temperature does not reach to specified temperature even though the engine has run long enough.	• Thermostat • Leakage from sealing portion of thermostat • Engine coolant temperature sensor

DTC Confirmation Procedure

INFOID:0000000005284694

WITH CONSULT-III

CAUTION:
Always drive vehicle at a safe speed.
NOTE:
If DTC Confirmation Procedure has been previously conducted, always turn ignition switch OFF and wait at least 10 seconds before conducting the next test.
TESTING CONDITION:
- **For best results, perform at ambient temperature of –10°C (14°F) or higher.**
- **For best results, perform at engine coolant temperature of –10°C (14°F) to 52°C (126°F).**
- **Before performing the following procedure, do not fill with the fuel.**

1. Turn A/C switch OFF.
2. Turn blower fan switch OFF.
3. Turn ignition switch ON.
4. Select “COOLAN TEMP/S” in “DATA MONITOR” mode with CONSULT-III.
5. Check the indication of “COOLAN TEMP/S”.
   If it is below 52°C (126°F), go to following step.
   If it is above 52°C (126°F), cool down the engine to less than 52°C (126°F). Then go to next steps.
6. Start engine.
7. Drive vehicle for 10 consecutive minutes under the following conditions.

VHCL SPEED SE	More than 56 km/h (35 MPH)

   If “COOLAN TEMP/S” increases to more than 71°C (160°F) within 10 minutes, turn ignition switch OFF because the test result will be OK.
8. Check 1st trip DTC.
9. If 1st trip DTC is detected, go to EC-223, "Diagnosis Procedure".

WITH GST

Follow the procedure “With CONSULT-III” above.

Diagnosis Procedure

INFOID:0000000005284695

1. CHECK ENGINE COOLANT TEMPERATURE SENSOR

Refer to EC-211, "Component Inspection".

OK or NG

OK >> GO TO 2.
NG >> Replace engine coolant temperature sensor.

2. CHECK THERMOSTAT

Refer to CO-22, "Removal and Installation".

OK or NG

OK >> **INSPECTION END**
NG >> Replace thermostat.

Removal and Installation

INFOID:0000000005284696

ENGINE COOLANT TEMPERATURE SENSOR

Refer to CO-21.

DTC P0130 A/F SENSOR 1

Component Description

INFOID:0000000005284697

The air fuel ratio (A/F) sensor 1 is a planar one-cell limit current sensor. The sensor element of the A/F sensor 1 is composed an electrode layer, which transports ions. It has a heater in the element.
The sensor is capable of precise measurement λ = 1, but also in the lean and rich range. Together with its control electronics, the sensor outputs a clear, continuous signal throughout a wide λ range.
The exhaust gas components diffuse through the diffusion layer at the sensor cell. An electrode layer is applied voltage, and this current relative oxygen density in lean. Also this current relative hydrocarbon density in rich.
Therefore, the A/F sensor 1 is able to indicate air fuel ratio by this electrode layer of current. In addition, a heater is integrated in the sensor to ensure the required operating temperature of about 800°C (1,472°F).

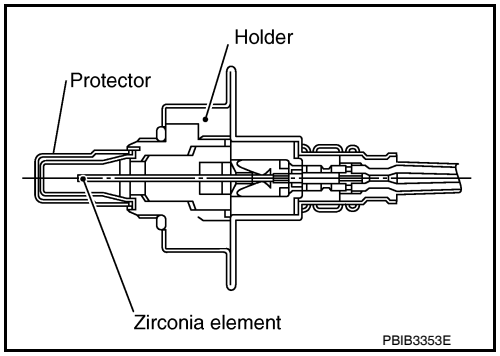

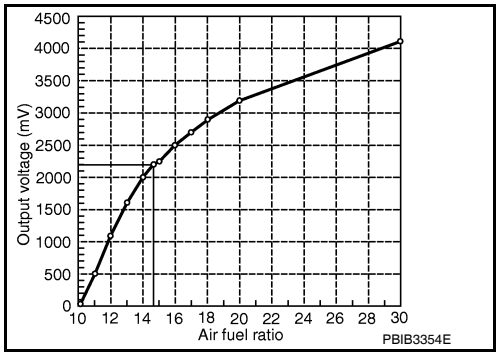

CONSULT-III Reference Value in Data Monitor Mode

INFOID:0000000005284698

Specification data are reference values.

Monitor item	Condition		Specification
A/F SEN1 (B1)	• Engine: After warming up	Maintaining engine speed at 2,000 rpm	Fluctuates around 2.2 V

On Board Diagnosis Logic

INFOID:0000000005284699

To judge the malfunction, the diagnosis checks that the A/F signal computed by ECM from the air fuel ratio (A/F) sensor 1 signal fluctuates according to fuel feedback control.

DTC No.	Trouble diagnosis name	DTC detecting condition		Possible Cause
P0130 0130	Air fuel ratio (A/F) sensor 1 circuit	A)	The A/F signal computed by ECM from the A/F sensor 1 signal is constantly in the range other than approx. 2.2 V.	• Harness or connectors [Air fuel ratio (A/F) sensor 1 circuit is open or shorted.] • Air fuel ratio (A/F) sensor 1
		B)	The A/F signal computed by ECM from the A/F sensor 1 signal is constantly approx. 2.2 V.	

DTC Confirmation Procedure

INFOID:0000000005284700

Perform PROCEDURE FOR MALFUNCTION A first.
If the DTC cannot be confirmed, perform PROCEDURE FOR MALFUNCTION B.
NOTE:
If DTC Confirmation Procedure has been previously conducted, always turn ignition switch OFF and wait at least 10 seconds before conducting the next test.
TESTING CONDITION:
Before performing the following procedure, confirm that battery voltage is more than 11 V at idle.

PROCEDURE FOR MALFUNCTION A

WITH CONSULT-III

1. Start engine and warm it up to normal operating temperature.
2. Select “DATA MONITOR” mode with CONSULT-III.
3. Let engine idle for 2 minutes.
4. Check 1st trip DTC.
5. If 1st trip DTC is detected, go to EC-228, "Diagnosis Procedure".

WITH GST
Follow the procedure “With CONSULT-III” above.

PROCEDURE FOR MALFUNCTION B

CAUTION:
Always drive vehicle at a safe speed.

WITH CONSULT-III
1. Start engine and warm it up to normal operating temperature.
2. Select “A/F SEN1 (B1)” in “DATA MONITOR” mode with CONSULT-III.
3. Check “A/F SEN1 (B1)” indication.
   If the indication is constantly approx. 2.2 V and does not fluctuates, go to EC-228, "Diagnosis Procedure".
   If the indication fluctuates around 2.2 V, go to next step.
4. Select “A/F SEN1 (B1) P1276 ” (for P0130) of “A/F SEN1” in “DTC WORK SUPPORT” mode with CONSULT-III.
5. Touch “START”.
6. When the following conditions are met, “TESTING” will be displayed on the CONSULT-III screen.

ENG SPEED	1,000 - 3,200 rpm
VHCL SPEED SE	More than 64 km/h (40 MPH)
B/FUEL SCHDL	1.0 - 8.0 msec
Shift lever	D position (CVT) 5th position (M/T)

   If “TESTING” is not displayed after 20 seconds, retry from step 2.
7. Release accelerator pedal fully.
   NOTE:
   Never apply brake during releasing the accelerator pedal.
8. Make sure that “TESTING” changes to “COMPLETED”.
   If “TESTING” changed to “OUT OF CONDITION”, retry from step 6.
9. Make sure that “OK” is displayed after touching “ON-BOARD DIAGNOSIS”.
   If “NG” is displayed, go to EC-228, "Diagnosis Procedure".

Overall Function Check

INFOID:0000000005284701

PROCEDURE MALFUNCTION B

Use this procedure to check the overall function of the A/F sensor 1 circuit. During this check, a 1st trip DTC might not be confirmed.

WITH GST
1. Start engine and warm it up to normal operating temperature.
2. Drive the vehicle at a speed of 80 km/h (50 MPH) for a few minutes in the suitable gear position.
3. Set shift lever to D position (CVT) or 5th position (M/T), then release the accelerator pedal fully until the vehicle speed decreases to 50 km/h (31 MPH).
   NOTE:
   Never apply brake during releasing the accelerator pedal.
4. Repeat steps 2 and 3 for five times.
5. Stop the vehicle and turn ignition switch OFF.
6. Wait at least 10 seconds and restart engine.
7. Repeat steps 2 and 3 for five times.
8. Stop the vehicle and connect GST to the vehicle.
9. Make sure that no 1st trip DTC is displayed.
   If 1st trip DTC is displayed, go to EC-228, "Diagnosis Procedure".

Wiring Diagram

INFOID:0000000005284702

EC-A/F-01

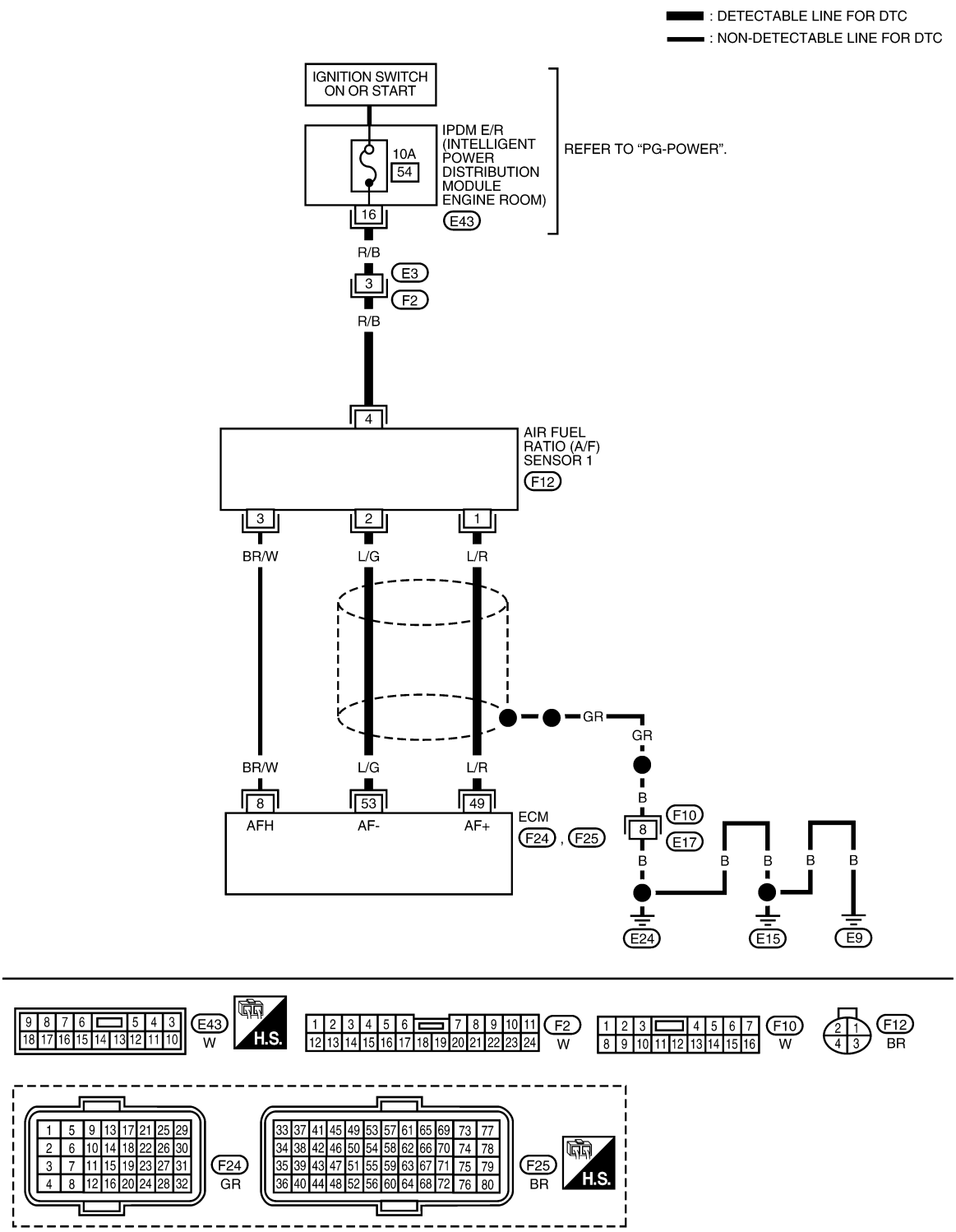

Specification data are reference values and are measured between each terminal and ground.
Pulse signal is measured by CONSULT-III.

CAUTION:

Do not use ECM ground terminals when measuring input/output voltage. Doing so may result in damage to the ECM's transistor. Use a ground other than ECM terminals, such as the ground.

TERMINAL NO.	WIRE COLOR	ITEM	CONDITION	DATA (DC Voltage)
8	BR/W	A/F sensor 1 heater	**[Engine is running]** • **Warm-up condition** • Idle speed (More than 140 seconds after starting engine)	Approximately 2.9 - 8.8 V★ 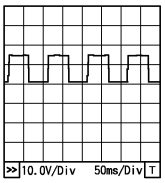 PBIA8148J
49	L/R	A/F sensor 1	**[Engine is running]** • **Warm-up condition** • Engine speed: 2,000 rpm	Approximately 1.8 V Output voltage varies with air fuel ratio.
53	L/G	A/F sensor 1	**[Ignition switch: ON]**	Approximately 2.2 V

★: Average voltage for pulse signal (Actual pulse signal can be confirmed by oscilloscope.)

Diagnosis Procedure

INFOID:0000000005284703

1. CHECK GROUND CONNECTIONS

1. Turn ignition switch OFF.
2. Loosen and retighten ground screws on the body.
   Refer to EC-157, "Ground Inspection".

- ⇦: Vehicle front
- Body ground (1)

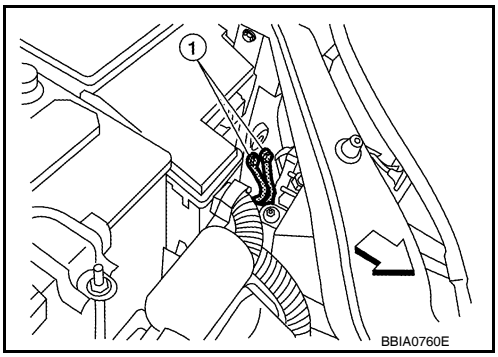

BBIA0760E

OK or NG

OK >> GO TO 2.
NG >> Repair or replace ground connections.

2. CHECK AIR FUEL RATIO (A/F) SENSOR 1 POWER SUPPLY CIRCUIT

1. Disconnect A/F sensor 1 harness connector (1).
2. Turn ignition switch ON.

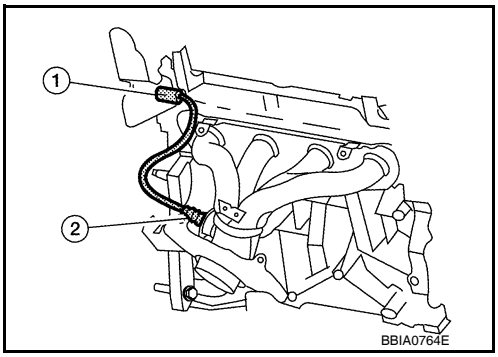

BBIA0764E

3. Check voltage between A/F sensor 1 terminal 4 and ground with CONSULT-III or tester.

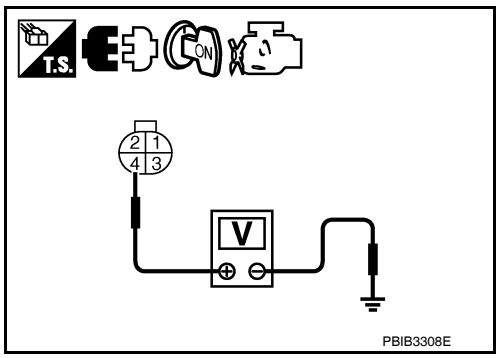

Voltage: Battery voltage

OK or NG

OK >> GO TO 4.
NG >> GO TO 3.

3. DETECT MALFUNCTIONING PART

Check the following.
- Harness connectors E3, F2
- 10 A fuse
- Harness for open or short between A/F sensor 1 and fuse

>> Repair or replace harness or connectors.

4. CHECK A/F SENSOR 1 INPUT SIGNAL CIRCUIT FOR OPEN AND SHORT

1. Turn ignition switch OFF.
2. Disconnect ECM harness connector.
3. Check harness continuity between the following terminals. Refer to Wiring Diagram.

A/F sensor 1 terminal	ECM terminal
1	49
2	53

Continuity should exist.

4. Check harness continuity between ECM terminals 49, 53 or A/F sensor 1 terminals 1, 2 and ground. Refer to Wiring Diagram.

Continuity should not exist.

5. Also check harness for short to power.

OK or NG

OK >> GO TO 5.
NG >> Repair open circuit or short to ground or short to power in harness or connectors.

5. CHECK INTERMITTENT INCIDENT

Perform EC-152.

OK or NG

OK >> GO TO 6.
NG >> Repair or replace.

6. REPLACE AIR FUEL RATIO (A/F) SENSOR 1

Replace air fuel ratio (A/F) sensor 1.

CAUTION:
- **Discard any A/F sensor which has been dropped from a height of more than 0.5 m (19.7 in) onto a hard surface such as a concrete floor; use a new one.**
- **Before installing new A/F sensor, clean exhaust system threads using Oxygen Sensor Thread Cleaner tool J-43897-18 or J-43897-12 and approved anti-seize lubricant.**

>> **INSPECTION END**

Removal and Installation

INFOID:0000000005284704

AIR FUEL RATIO SENSOR

Refer to EM-23.

DTC P0131 A/F SENSOR 1

Component Description

INFOID:0000000005284705

The air fuel ratio (A/F) sensor 1 is a planar one-cell limit current sensor. The sensor element of the A/F sensor 1 is composed an electrode layer, which transports ions. It has a heater in the element.
The sensor is capable of precise measurement λ = 1, but also in the lean and rich range. Together with its control electronics, the sensor outputs a clear, continuous signal throughout a wide λ range.
The exhaust gas components diffuse through the diffusion layer at the sensor cell. An electrode layer is applied voltage, and this current relative oxygen density in lean. Also this current relative hydrocarbon density in rich.
Therefore, the A/F sensor 1 is able to indicate air fuel ratio by this electrode layer of current. In addition, a heater is integrated in the sensor to ensure the required operating temperature of about 800°C (1,472°F).

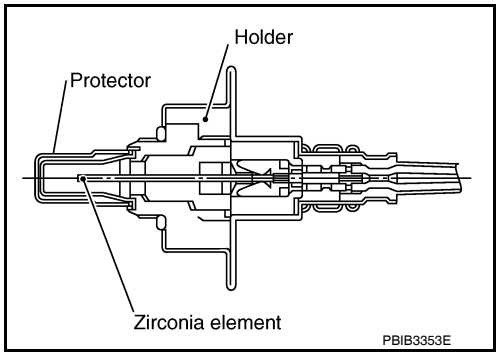

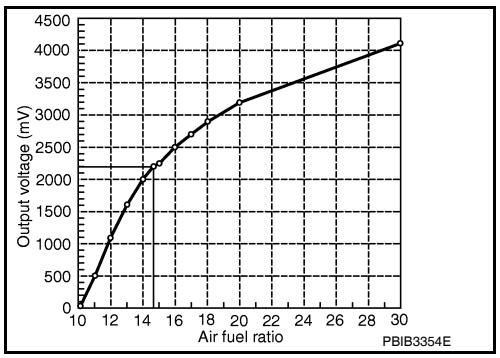

CONSULT-III Reference Value in Data Monitor Mode

INFOID:0000000005284706

Specification data are reference values.

Monitor item	Condition		Specification
A/F SEN1 (B1)	• Engine: After warming up	Maintaining engine speed at 2,000 rpm	Fluctuates around 2.2 V

On Board Diagnosis Logic

INFOID:0000000005284707

To judge the malfunction, the diagnosis checks that the A/F signal computed by ECM from the air fuel ratio (A/F) sensor 1 signal is not inordinately low.

DTC No.	Trouble diagnosis name	DTC detecting condition	Possible Cause
P0131 0131	Air fuel ratio (A/F) sensor 1 circuit low voltage	The A/F signal computed by ECM from the A/F sensor 1 signal is constantly approx. 0 V.	• Harness or connectors [Air fuel ratio (A/F) sensor circuit is open or shorted.] • Air fuel ratio (A/F) sensor 1

DTC Confirmation Procedure

INFOID:0000000005284708

NOTE:
If DTC Confirmation Procedure has been previously conducted, always turn ignition switch OFF and wait at least 10 seconds before conducting the next test.
TESTING CONDITION:
Before performing the following procedure, confirm that battery voltage is more than 10.5 V at idle.

WITH CONSULT-III

1. Start engine and warm it up to normal operating temperature.
2. Select “A/F SEN1 (B1)” in “DATA MONITOR” mode with CONSULT-III.
3. Check “A/F SEN1 (B1)” indication.
   If the indication is constantly approx. 0 V, go to EC-234, "Diagnosis Procedure".

If the indication is not constantly approx. 0 V, go to next step.

4. Turn ignition switch OFF, wait at least 10 seconds and then restart engine.
5. Drive and accelerate vehicle to more than 40 km/h (25 MPH) within 20 seconds after restarting engine.
6. Maintain the following conditions for about 20 consecutive seconds.

ENG SPEED	1,000 - 3,200 rpm
VHCL SPEED SE	More than 40 km/h (25 MPH)
B/FUEL SCHDL	1.5 - 9.0 msec
Shift lever	Suitable position

NOTE:
- **Keep the accelerator pedal as steady as possible during the cruising.**
- **If this procedure is not completed within 1 minute after restarting engine at step 4, return to step 4.**

7. Check 1st trip DTC.
8. If 1st trip DTC is displayed, go to EC-234, "Diagnosis Procedure".

WITH GST

Follow the procedure “WITH CONSULT-III” above.

Wiring Diagram

INFOID:0000000005284709

EC-A/F-01

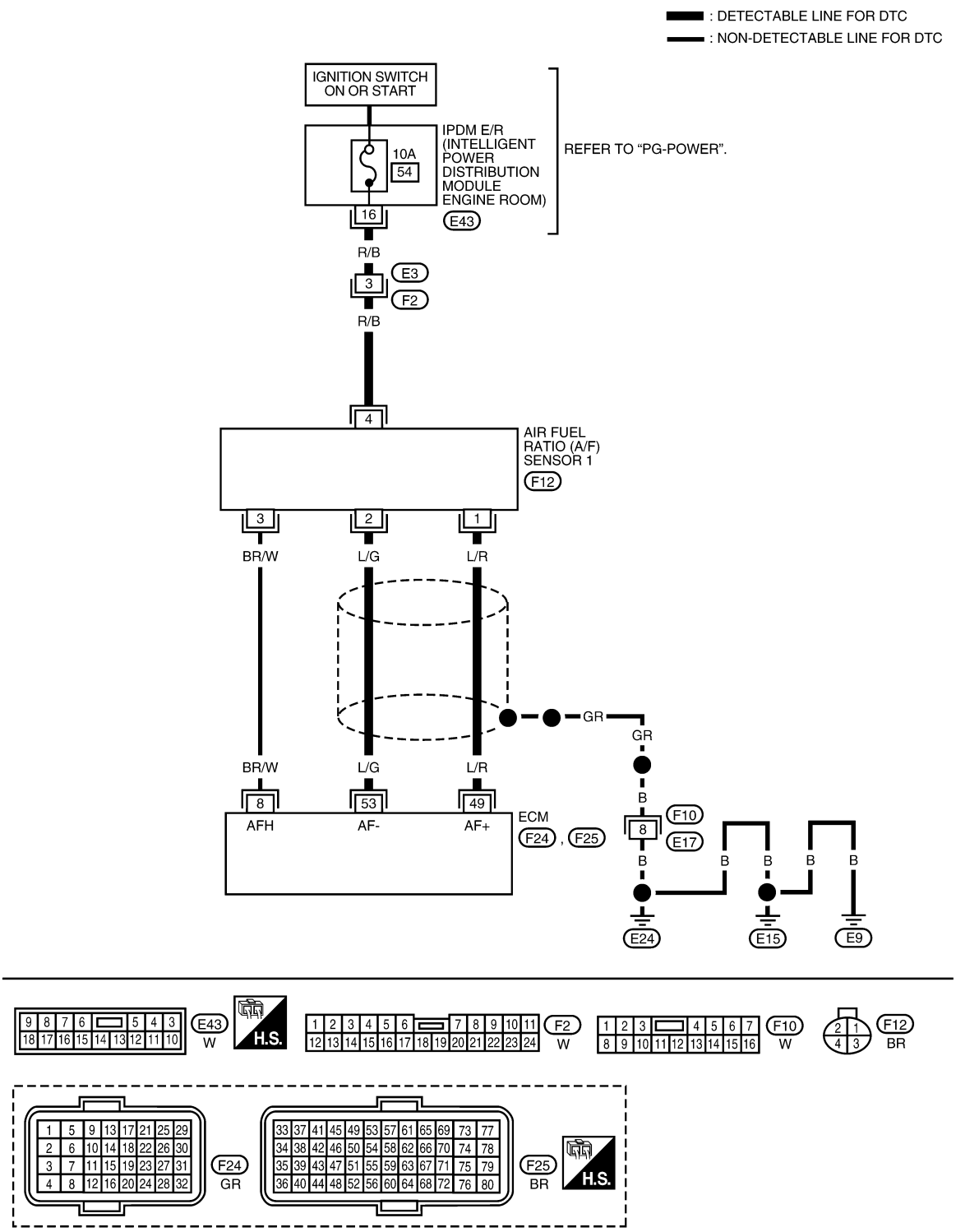

Specification data are reference values and are measured between each terminal and ground.
Pulse signal is measured by CONSULT-III.

CAUTION:

Do not use ECM ground terminals when measuring input/output voltage. Doing so may result in damage to the ECM's transistor. Use a ground other than ECM terminals, such as the ground.

TERMINAL NO.	WIRE COLOR	ITEM	CONDITION	DATA (DC Voltage)
8	BR/W	A/F sensor 1 heater	**[Engine is running]** • **Warm-up condition** • Idle speed (More than 140 seconds after starting engine)	Approximately 2.9 - 8.8 V★ 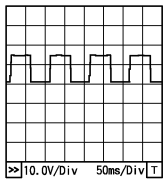 PBIA8148J
49	L/R	A/F sensor 1	**[Engine is running]** • **Warm-up condition** • Engine speed: 2,000 rpm	Approximately 1.8 V Output voltage varies with air fuel ratio.
53	L/G	A/F sensor 1	**[Ignition switch: ON]**	Approximately 2.2 V

★: Average voltage for pulse signal (Actual pulse signal can be confirmed by oscilloscope.)

Diagnosis Procedure

INFOID:0000000005284710

1. CHECK GROUND CONNECTIONS

1. Turn ignition switch OFF.
2. Loosen and retighten ground screws on the body.
   Refer to EC-157, "Ground Inspection".

- ⇦: Vehicle front
- Body ground (1)

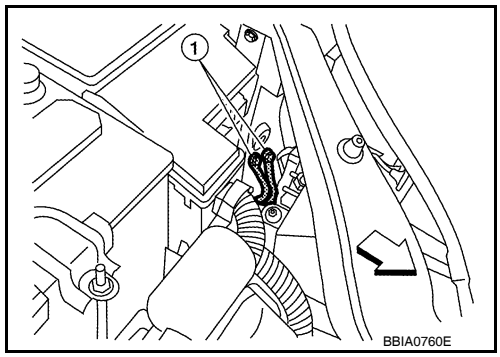

BBIA0760E

OK or NG

OK >> GO TO 2.
NG >> Repair or replace ground connections.

2. CHECK AIR FUEL RATIO (A/F) SENSOR 1 POWER SUPPLY CIRCUIT

1. Disconnect A/F sensor 1 harness connector (1).
2. Turn ignition switch ON.

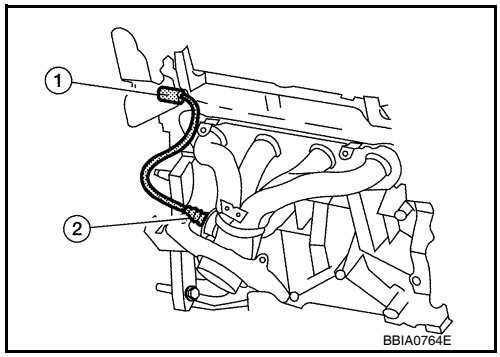

BBIA0764E

3. Check voltage between A/F sensor 1 terminal 4 and ground with CONSULT-III or tester.

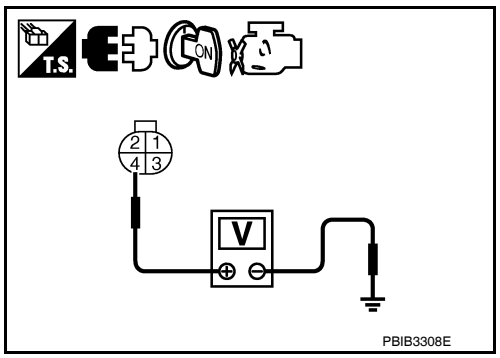

Voltage: Battery voltage

OK or NG

OK >> GO TO 4.
NG >> GO TO 3.

3. DETECT MALFUNCTIONING PART

Check the following.
- Harness connectors E3, F2
- 10 A fuse
- Harness for open or short between A/F sensor 1 and fuse

>> Repair or replace harness or connectors.

4. CHECK A/F SENSOR 1 INPUT SIGNAL CIRCUIT FOR OPEN AND SHORT

1. Turn ignition switch OFF.
2. Disconnect ECM harness connector.
3. Check harness continuity between the following terminals. Refer to Wiring Diagram.

A/F sensor 1 terminal	ECM terminal
1	49
2	53

Continuity should exist.

4. Check harness continuity between ECM terminals 49, 53 or A/F sensor 1 terminals 1, 2 and ground. Refer to Wiring Diagram.

Continuity should not exist.

5. Also check harness for short to power.

OK or NG

OK >> GO TO 5.
NG >> Repair open circuit or short to ground or short to power in harness or connectors.

5. CHECK INTERMITTENT INCIDENT

Perform EC-152.

OK or NG

OK >> GO TO 6.
NG >> Repair or replace.

6. REPLACE AIR FUEL RATIO (A/F) SENSOR 1

Replace air fuel ratio (A/F) sensor 1.

CAUTION:
- **Discard any A/F sensor which has been dropped from a height of more than 0.5 m (19.7 in) onto a hard surface such as a concrete floor; use a new one.**
- **Before installing new A/F sensor, clean exhaust system threads using Oxygen Sensor Thread Cleaner tool J-43897-18 or J-43897-12 and approved anti-seize lubricant.**

>> **INSPECTION END**

Removal and Installation

INFOID:0000000005284711

AIR FUEL RATIO SENSOR

Refer to EM-23.

DTC P0132 A/F SENSOR 1

Component Description

INFOID:0000000005284712

The air fuel ratio (A/F) sensor 1 is a planar one-cell limit current sensor. The sensor element of the A/F sensor 1 is composed an electrode layer, which transports ions. It has a heater in the element.
The sensor is capable of precise measurement λ = 1, but also in the lean and rich range. Together with its control electronics, the sensor outputs a clear, continuous signal throughout a wide λ range.
The exhaust gas components diffuse through the diffusion layer at the sensor cell. An electrode layer is applied voltage, and this current relative oxygen density in lean. Also this current relative hydrocarbon density in rich.
Therefore, the A/F sensor 1 is able to indicate air fuel ratio by this electrode layer of current. In addition, a heater is integrated in the sensor to ensure the required operating temperature of about 800°C (1,472°F).

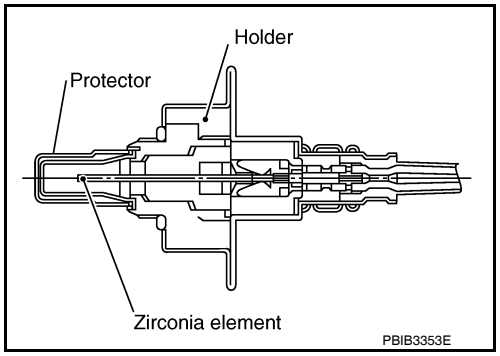

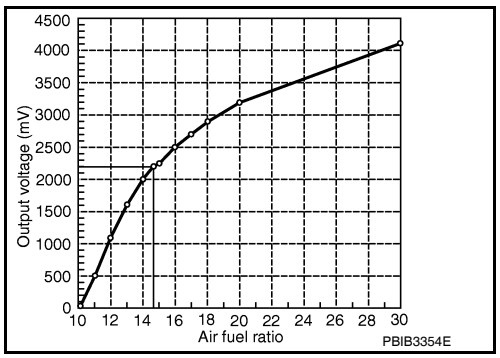

CONSULT-III Reference Value in Data Monitor Mode

INFOID:0000000005284713

Specification data are reference values.

Monitor item	Condition		Specification
A/F SEN1 (B1)	• Engine: After warming up	Maintaining engine speed at 2,000 rpm	Fluctuates around 2.2 V

On Board Diagnosis Logic

INFOID:0000000005284714

To judge the malfunction, the diagnosis checks that the A/F signal computed by ECM from the air fuel ratio (A/F) sensor 1 signal is not inordinately high.

DTC No.	Trouble diagnosis name	DTC detecting condition	Possible Cause
P0132 0132	Air fuel ratio (A/F) sensor 1 circuit high voltage	The A/F signal computed by ECM from the A/F sensor 1 signal is constantly approx. 5 V.	• Harness or connectors [Air fuel ratio (A/F) sensor circuit is open or shorted.] • Air fuel ratio (A/F) sensor 1

DTC Confirmation Procedure

INFOID:0000000005284715

NOTE:
If DTC Confirmation Procedure has been previously conducted, always turn ignition switch OFF and wait at least 10 seconds before conducting the next test.
TESTING CONDITION:
Before performing the following procedure, confirm that battery voltage is more than 10.5 V at idle.

WITH CONSULT-III

1. Start engine and warm it up to normal operating temperature.
2. Select “A/F SEN1 (B1)” in “DATA MONITOR” mode with CONSULT-III.
3. Check “A/F SEN1 (B1)” indication.
   If the indication is constantly approx. 5 V, go to EC-240, "Diagnosis Procedure".

If the indication is not constantly approx. 5 V, go to next step.

4. Turn ignition switch OFF, wait at least 10 seconds and then restart engine.
5. Drive and accelerate vehicle to more than 40 km/h (25 MPH) within 20 seconds after restarting engine.
6. Maintain the following conditions for about 20 consecutive seconds.

ENG SPEED	1,000 - 3,200 rpm
VHCL SPEED SE	More than 40 km/h (25 MPH)
B/FUEL SCHDL	1.5 - 9.0 msec
Shift lever	Suitable position

NOTE:
- **Keep the accelerator pedal as steady as possible during the cruising.**
- **If this procedure is not completed within 1 minute after restarting engine at step 4, return to step 4.**

7. Check 1st trip DTC.
8. If 1st trip DTC is displayed, go to EC-240, "Diagnosis Procedure".

WITH GST

Follow the procedure “WITH CONSULT-III” above.

Wiring Diagram

INFOID:0000000005284716

EC-A/F-01

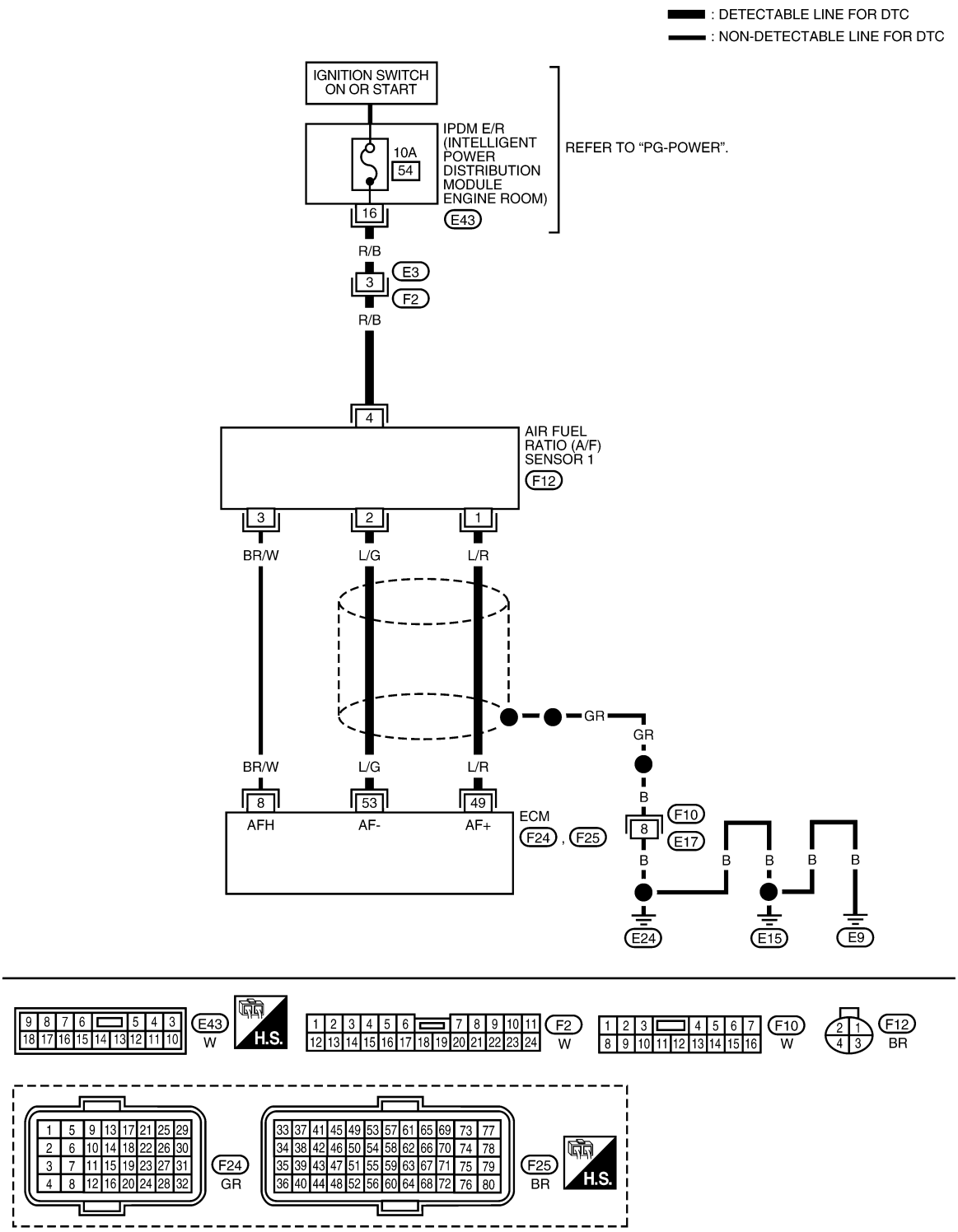

Specification data are reference values and are measured between each terminal and ground.
Pulse signal is measured by CONSULT-III.

CAUTION:

Do not use ECM ground terminals when measuring input/output voltage. Doing so may result in damage to the ECM's transistor. Use a ground other than ECM terminals, such as the ground.

TERMINAL NO.	WIRE COLOR	ITEM	CONDITION	DATA (DC Voltage)
8	BR/W	A/F sensor 1 heater	**[Engine is running]** • **Warm-up condition** • Idle speed (More than 140 seconds after starting engine)	Approximately 2.9 - 8.8 V★ 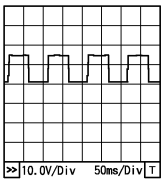 PBIA8148J
49	L/R	A/F sensor 1	**[Engine is running]** • **Warm-up condition** • Engine speed: 2,000 rpm	Approximately 1.8 V Output voltage varies with air fuel ratio.
53	L/G	A/F sensor 1	**[Ignition switch: ON]**	Approximately 2.2 V

★: Average voltage for pulse signal (Actual pulse signal can be confirmed by oscilloscope.)

Diagnosis Procedure

INFOID:0000000005284717

1. CHECK GROUND CONNECTIONS

1. Turn ignition switch OFF.
2. Loosen and retighten three ground screws on the body.
   Refer to EC-157, "Ground Inspection".

- ⇦: Vehicle front
- Body ground (1)

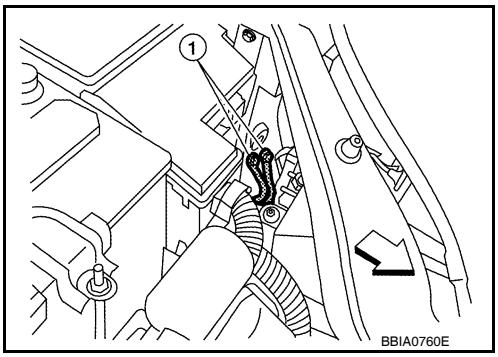

BBIA0760E

OK or NG

OK >> GO TO 2.
NG >> Repair or replace ground connections.

2. CHECK AIR FUEL RATIO (A/F) SENSOR 1 POWER SUPPLY CIRCUIT

1. Disconnect A/F sensor 1 harness connector (1).
2. Turn ignition switch ON.

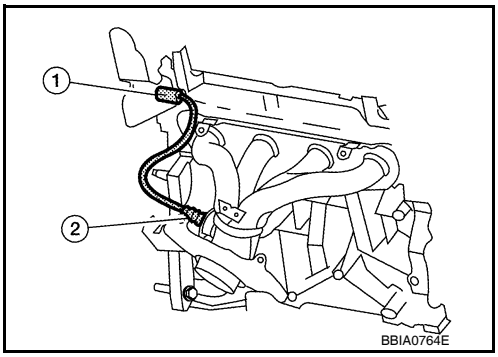

BBIA0764E

3. Check voltage between A/F sensor 1 terminal 4 and ground with CONSULT-III or tester.

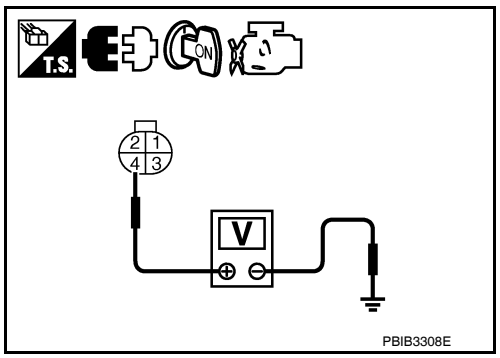

Voltage: Battery voltage

OK or NG

OK >> GO TO 4.
NG >> GO TO 3.

3. DETECT MALFUNCTIONING PART

Check the following.
- Harness connectors E3, F2
- 10 A fuse
- Harness for open or short between A/F sensor 1 and fuse

>> Repair or replace harness or connectors.

4. CHECK A/F SENSOR 1 INPUT SIGNAL CIRCUIT FOR OPEN AND SHORT

1. Turn ignition switch OFF.
2. Disconnect ECM harness connector.
3. Check harness continuity between the following terminals. Refer to Wiring Diagram.

A/F sensor 1 terminal	ECM terminal
1	49
2	53

Continuity should exist.

4. Check harness continuity between ECM terminals 49, 53 or A/F sensor 1 terminals 1, 2 and ground. Refer to Wiring Diagram.

Continuity should not exist.

5. Also check harness for short to power.

OK or NG

OK >> GO TO 5.
NG >> Repair open circuit or short to ground or short to power in harness or connectors.

5. CHECK INTERMITTENT INCIDENT

Perform EC-152.

OK or NG

OK >> GO TO 6.
NG >> Repair or replace.

6. REPLACE AIR FUEL RATIO (A/F) SENSOR 1

Replace air fuel ratio (A/F) sensor 1.

CAUTION:
- **Discard any A/F sensor which has been dropped from a height of more than 0.5 m (19.7 in) onto a hard surface such as a concrete floor; use a new one.**
- **Before installing new A/F sensor, clean exhaust system threads using Oxygen Sensor Thread Cleaner tool J-43897-18 or J-43897-12 and approved anti-seize lubricant.**

>> **INSPECTION END**

Removal and Installation

INFOID:0000000005284718

AIR FUEL RATIO SENSOR

Refer to EM-23.

DTC P0133 A/F SENSOR 1

Component Description

INFOID:0000000005284719

The air fuel ratio (A/F) sensor 1 is a planar one-cell limit current sensor. The sensor element of the A/F sensor 1 is composed an electrode layer, which transports ions. It has a heater in the element.
The sensor is capable of precise measurement λ = 1, but also in the lean and rich range. Together with its control electronics, the sensor outputs a clear, continuous signal throughout a wide λ range.
The exhaust gas components diffuse through the diffusion layer at the sensor cell. An electrode layer is applied voltage, and this current relative oxygen density in lean. Also this current relative hydrocarbon density in rich.
Therefore, the A/F sensor 1 is able to indicate air fuel ratio by this electrode layer of current. In addition, a heater is integrated in the sensor to ensure the required operating temperature of about 800°C (1,472°F).

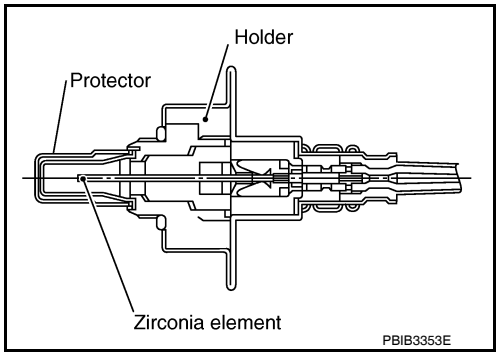

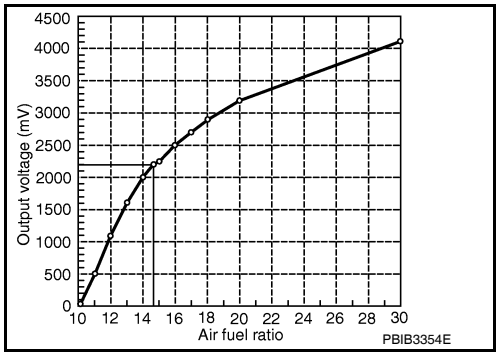

CONSULT-III Reference Value in Data Monitor Mode

INFOID:0000000005284720

Specification data are reference values.

Monitor item	Condition		Specification
A/F SEN1 (B1)	• Engine: After warming up	Maintaining engine speed at 2,000 rpm	Fluctuates around 2.2 V

On Board Diagnosis Logic

INFOID:0000000005284721

To judge the malfunction of air fuel ratio (A/F) sensor 1, this diagnosis measures response time of the A/F signal computed by ECM from the air fuel ratio (A/F) sensor 1 signal. The time is compensated by engine operating (speed and load), fuel feedback control constant, and the air fuel ratio (A/F) sensor 1 temperature index. Judgment is based on whether the compensated time (the A/F sensor 1 signal cycling time index) is inordinately long or not.

DTC No.	Trouble diagnosis name	DTC detecting condition	Possible Cause
P0133 0133	Air fuel ratio (A/F) sensor 1 circuit slow response	The response of the A/F signal computed by ECM from A/F sensor 1 signal takes more than the specified time.	• Harness or connectors [Air fuel ratio (A/F) sensor circuit is open or shorted.] • Air fuel ratio (A/F) sensor 1 • Air fuel ratio (A/F) sensor heater 1 • Fuel pressure • Fuel injector • Intake air leaks • Exhaust gas leaks • PCV valve • Mass air flow sensor

DTC Confirmation Procedure

INFOID:0000000005284722

NOTE:

If DTC Confirmation Procedure has been previously conducted, always turn ignition switch OFF and wait at least 10 seconds before conducting the next test.

TESTING CONDITION:

Before performing the following procedure, confirm that battery voltage is more than 11 V at idle.

WITH CONSULT-III

1. Start engine and warm it up to normal operating temperature.
2. Turn ignition switch OFF and wait at least 10 seconds.
3. Start engine and keep the engine speed between 3,500 and 4,000 rpm for at least 1minute under no load.
4. Let engine idle for 1 minute.
5. Select “A/F SEN1(B1) P1278/P1279” (for DTC P0133) of “A/F SEN1” in “DTC WORK SUPPORT” mode with CONSULT-III.
6. Touch “START”.
   If “COMPLETED” appears on CONSULT-III screen, go to step 10.
   If “COMPLETED” does not appear on CONSULT-III screen, go to the following step.
7. After perform the following procedure, “TESTING” will be displayed on the CONSULT-III screen.

a. Increase the engine speed up to 4,000 to 5,000 rpm and keep it for 10 seconds.
b. Fully release accelerator pedal and then let engine idle for about 10 seconds.
   If “TESTING” is not displayed after 10 seconds, refer to EC-144.

8. Wait for about 20 seconds at idle under the condition that “TESTING” is displayed on the CONSULT-III screen.
9. Make sure that “TESTING” changes to “COMPLETED”.
   If “TESTING” changed to “OUT OF CONDITION”, refer to EC-144.
10. Make sure that “OK” is displayed after touching “ON-BOARD DIAGNOSIS”.
    If “NG” is displayed, go to EC-246, "Diagnosis Procedure".

WITH GST

1. Start engine and warm it up to normal operating temperature.
2. Select Service $01 with GST.
3. Calculate the total value of “Short term fuel trim” and “Long term fuel trim” indications.
   Make sure that the total percentage should be within ±15%.
   If OK, go to the following step.
   If NG, check the following.
   - Intake air leaks
   - Exhaust gas leaks
   - Incorrect fuel pressure
   - Lack of fuel
   - Fuel injector
   - Incorrect PCV hose connection
   - PCV valve
   - Mass air flow sensor
4. Turn ignition switch OFF and wait at least 10 seconds.
5. Start engine and keep the engine speed between 3,500 and 4,000 rpm for at least 1minute under no load.
6. Let engine idle for 1 minute.
7. Increase the engine speed up to 4,000 to 5,000 rpm and keep it for 10 seconds.
8. Fully release accelerator pedal and then let engine idle for about 1 minute.
9. Select Service $07 with GST.
   If 1st trip DTC is detected, go to EC-246, "Diagnosis Procedure".

Wiring Diagram

INFOID:0000000005284723

EC-A/F-01

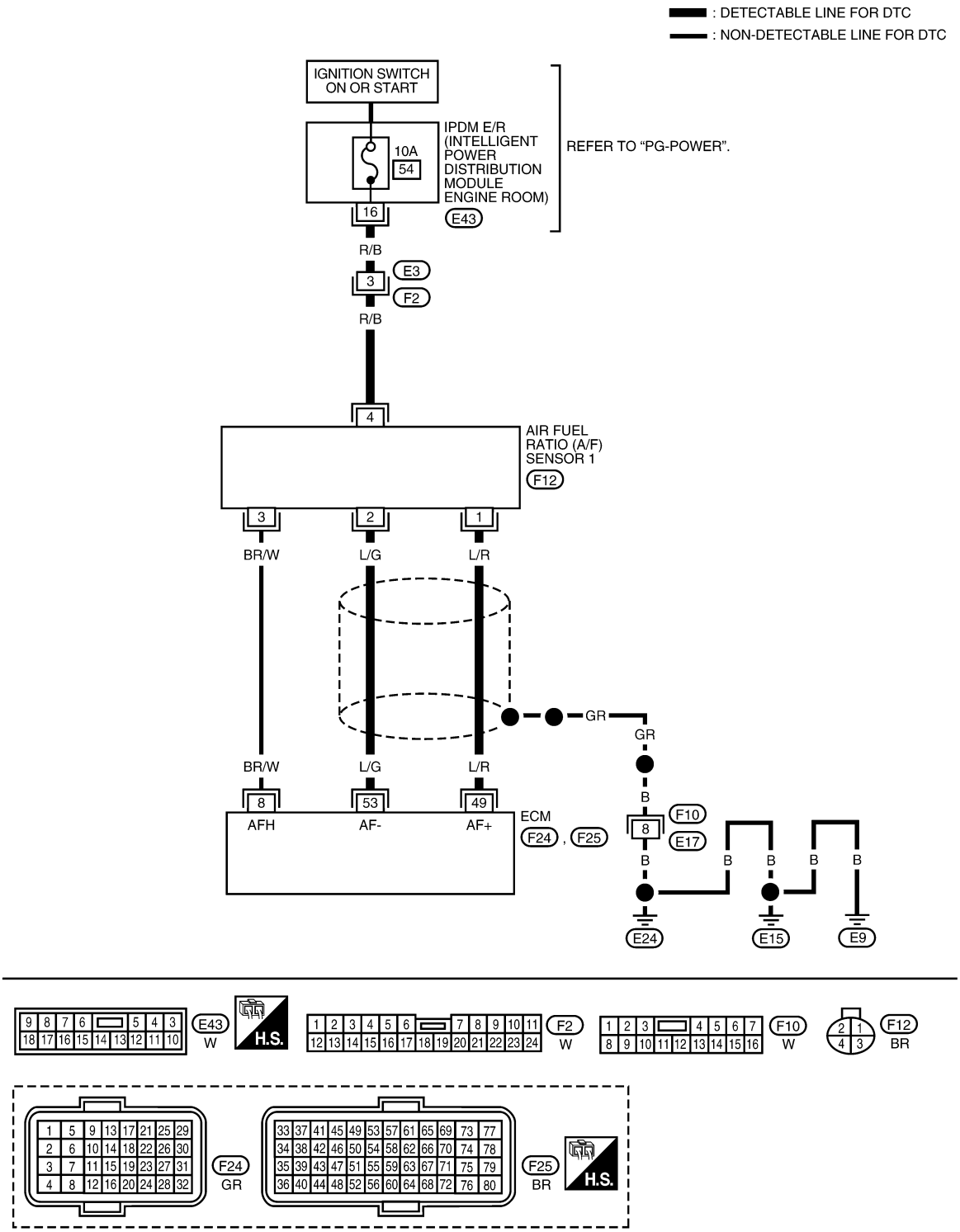

Specification data are reference values and are measured between each terminal and ground.
Pulse signal is measured by CONSULT-III.

CAUTION:

Do not use ECM ground terminals when measuring input/output voltage. Doing so may result in damage to the ECM's transistor. Use a ground other than ECM terminals, such as the ground.

TERMINAL NO.	WIRE COLOR	ITEM	CONDITION	DATA (DC Voltage)
8	BR/W	A/F sensor 1 heater	**[Engine is running]** • **Warm-up condition** • Idle speed (More than 140 seconds after starting engine)	Approximately 2.9 - 8.8 V★ 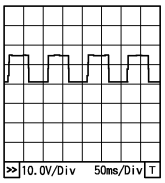 PBIA8148J
49	L/R	A/F sensor 1	**[Engine is running]** • **Warm-up condition** • Engine speed: 2,000 rpm	Approximately 1.8 V Output voltage varies with air fuel ratio.
53	L/G	A/F sensor 1	**[Ignition switch: ON]**	Approximately 2.2 V

★: Average voltage for pulse signal (Actual pulse signal can be confirmed by oscilloscope.)

Diagnosis Procedure

INFOID:0000000005284724

1. CHECK GROUND CONNECTIONS

1. Turn ignition switch OFF.
2. Loosen and retighten engine screws on the body.
   Refer to EC-157, "Ground Inspection".

- ⇦: Vehicle front
- Body ground (1)

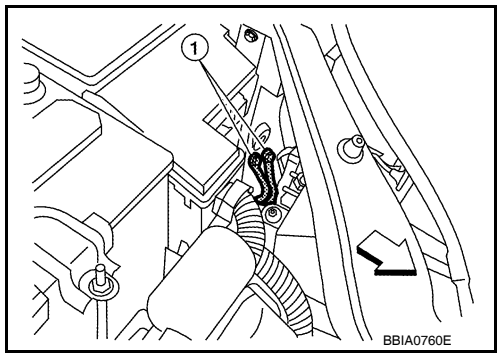

BBIA0760E

OK or NG

OK >> GO TO 2.
NG >> Repair or replace ground connections.

2. RETIGHTEN AIR FUEL RATIO (A/F) SENSOR 1

Loosen and retighten the air fuel ratio (A/F) sensor 1.
Refer to EM-24, "Removal and Installation".

>> GO TO 3.

3. CHECK EXHAUST GAS LEAK

1. Start engine and run it at idle.
2. Listen for an exhaust gas leak before three way catalyst (manifold).

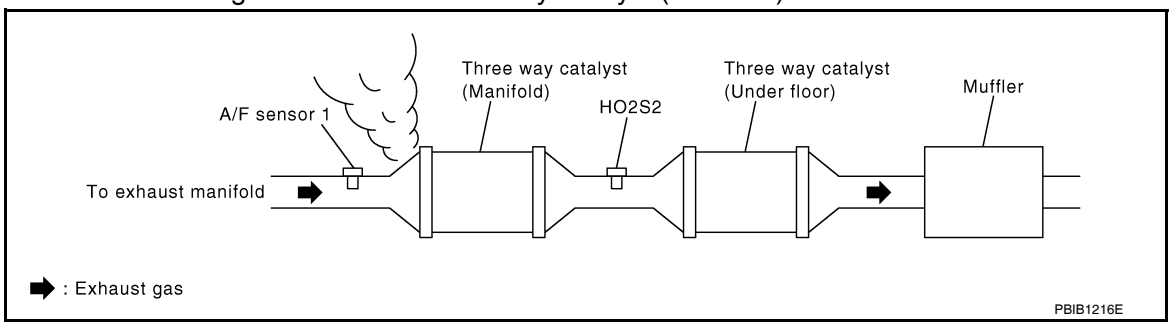

PBIB1216E

OK or NG

OK >> GO TO 4.
NG >> Repair or replace.

4. CHECK FOR INTAKE AIR LEAK

Listen for an intake air leak after the mass air flow sensor.

OK or NG

OK >> GO TO 5.
NG >> Repair or replace.

5. CLEAR THE SELF-LEARNING DATA

With CONSULT-III

1. Start engine and warm it up to normal operating temperature.
2. Select “SELF-LEARNING CONT” in “WORK SUPPORT” mode with CONSULT-III.
3. Clear the self-learning control coefficient by touching “CLEAR” or “START”.
4. Run engine for at least 10 minutes at idle speed.
   Is the 1st trip DTC P0171 or P0172 detected? Is it difficult to start engine?

Without CONSULT-III

1. Start engine and warm it up to normal operating temperature.
2. Turn ignition switch OFF.
3. Disconnect mass air flow sensor (1) harness connector, and restart and run engine for at least 5 seconds at idle speed.
4. Stop engine and reconnect mass air flow sensor harness connector.
5. Make sure DTC P0102 is displayed.
6. Erase the DTC memory. Refer to EC-62, "Emission-related Diagnostic Information".
7. Make sure DTC P0000 is displayed.
8. Run engine for at least 10 minutes at idle speed.
   Is the 1st trip DTC P0171 or P0172 detected? Is it difficult to start engine?

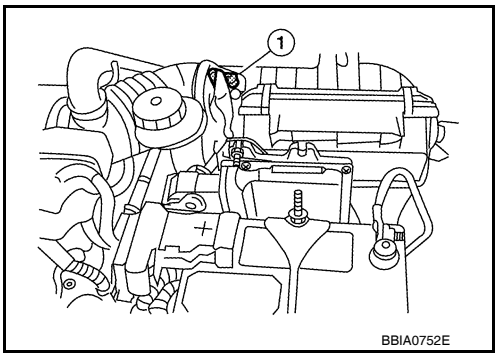

Yes or No

Yes >> Perform trouble diagnosis for DTC P0171, P0172. Refer to EC-275or EC-281.
No >> GO TO 6.

6. CHECK AIR FUEL RATIO (A/F) SENSOR 1 POWER SUPPLY CIRCUIT

1. Turn ignition switch OFF.
2. Disconnect A/F sensor 1 harness connector (1).
3. Turn ignition switch ON.

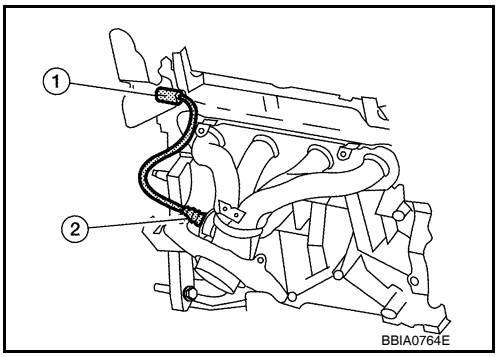

4. Check voltage between A/F sensor 1 terminal 4 and ground with CONSULT-III or tester.

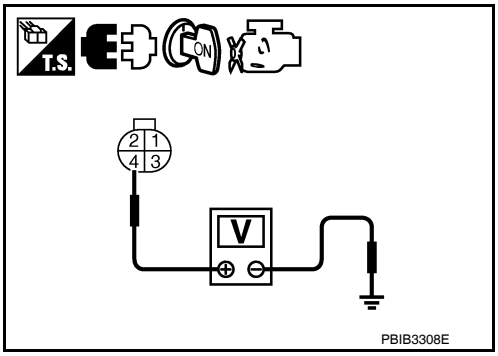

Voltage: Battery voltage

OK or NG

OK >> GO TO 8.
NG >> GO TO 7.

7. DETECT MALFUNCTIONING PART

Check the following.
- Harness connectors E3, F3
- 10 A fuse
- Harness for open or short between A/F sensor 1 and fuse

>> Repair or replace harness or connectors.

8. CHECK A/F SENSOR 1 INPUT SIGNAL CIRCUIT FOR OPEN AND SHORT

1. Turn ignition switch OFF.
2. Disconnect ECM harness connector.
3. Check harness continuity between the following terminals. Refer to Wiring Diagram.

A/F sensor 1 terminal	ECM terminal
1	49
2	53

Continuity should exist.

4. Check harness continuity between ECM terminals 49, 53 or A/F sensor 1 terminals 1, 2 and ground. Refer to Wiring Diagram.

Continuity should not exist.

5. Also check harness for short to power.

OK or NG

OK >> GO TO 9.
NG >> Repair open circuit or short to ground or short to power in harness or connectors.

9. CHECK AIR FUEL RATIO (A/F) SENSOR 1 HEATER

Refer to EC-172, "Component Inspection".

OK or NG

OK >> GO TO 10.
NG >> GO TO 13.

10. CHECK MASS AIR FLOW SENSOR

Refer to EC-191, "Component Inspection".

OK or NG

OK >> GO TO 11.
NG >> Replace mass air flow sensor.

11. CHECK PCV VALVE

Refer to EC-58, "Component Inspection".

OK or NG

OK >> GO TO 12.
NG >> Repair or replace PCV valve.

12. CHECK INTERMITTENT INCIDENT

Perform EC-152.

OK or NG

OK >> GO TO 13.
NG >> Repair or replace.

13. REPLACE AIR FUEL RATIO (A/F) SENSOR 1

Replace air fuel ratio (A/F) sensor 1.

CAUTION:

- **Discard any A/F sensor which has been dropped from a height of more than 0.5 m (19.7 in) onto a hard surface such as a concrete floor; use a new one.**
- **Before installing new A/F sensor, clean exhaust system threads using Oxygen Sensor Thread Cleaner tool J-43897-18 or J-43897-12 and approved anti-seize lubricant.**

>> **INSPECTION END**

Removal and Installation

INFOID:0000000005284725

AIR FUEL RATIO SENSOR

Refer to EM-23.

DTC P0137 HO2S2

Component Description

INFOID:0000000005284726

The heated oxygen sensor 2, after three way catalyst (manifold), monitors the oxygen level in the exhaust gas.
Even if switching characteristics of the air fuel ratio (A/F) sensor 1 are shifted, the air/fuel ratio is controlled to stoichiometric, by the signal from the heated oxygen sensor 2.
This sensor is made of ceramic zirconia. The zirconia generates voltage from approximately 1 V in richer conditions to 0 V in leaner conditions.
Under normal conditions the heated oxygen sensor 2 is not used for engine control operation.

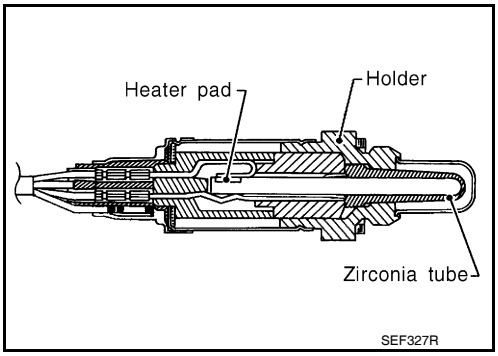

CONSULT-III Reference Value in Data Monitor Mode

INFOID:0000000005284727

Specification data are reference values.

Monitor item	Condition	Specification
HO2S2 (B1)	• Revving engine from idle to 3,000 rpm quickly after the following conditions are met. - Engine: After warming up - Keeping the engine speed between 3,500 and 4,000 rpm for 1 minute and at idle for 1 minute under no load	0 - 0.3 V ←→ Approx. 0.6 - 1.0 V
HO2S2 MNTR (B1)		LEAN ←→ RICH

On Board Diagnosis Logic

INFOID:0000000005284728

The heated oxygen sensor 2 has a much longer switching time between rich and lean than the air fuel ratio (A/F) sensor 1. The oxygen storage capacity before the three way catalyst (manifold) causes the longer switching time. To judge the malfunctions of heated oxygen sensor 2, ECM monitors whether the maximum voltage of the sensor is sufficiently high during the various driving condition such as fuel-cut.

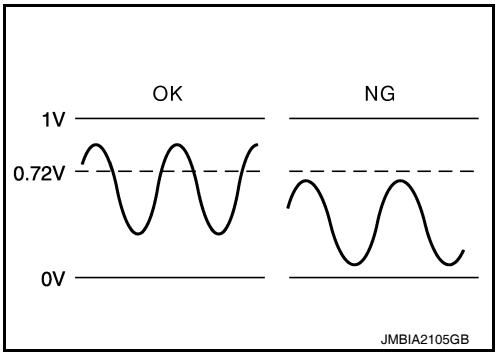

DTC No.	Trouble diagnosis name	DTC detecting condition	Possible cause
P0137 0137	Heated oxygen sensor 2 circuit low voltage	The maximum voltage from the sensor is not reached to the specified voltage.	• Harness or connectors (Heated oxygen sensor 2 circuit open or shorted.) • Heated oxygen sensor 2 • Fuel pressure • Fuel injector • Intake air leaks

DTC Confirmation Procedure

INFOID:0000000005284729

NOTE:
If DTC confirmation Procedure has been previously conducted, always turn ignition switch OFF and wait at least 10 seconds before conducting the next test.

WITH CONSULT-III
TESTING CONDITION:
For the best results, perform DTC WORK SUPPORT at a temperature of 0 to 30°C (32 to 86°F).

1. Turn ignition switch ON and select “DATA MONITOR” mode with CONSULT-III.
2. Start engine and warm it up to the normal operating temperature.
3. Turn ignition switch OFF and wait at least 10 seconds.
4. Start engine and keep the engine speed between 3,500 and 4,000 rpm for at least 1 minute under no load.
5. Let engine idle for 1 minute.
6. Make sure that “COOLAN TEMP/S” indicates more than 70°C (158°F).
   If not, warm up engine and go to next step when “COOLAN TEMP/S” indication reaches to 70°C (158°F).
7. Open engine hood.
8. Select “HO2S2 (B1) P1147” (for DTC P0137) of “HO2S2” in “DTC WORK SUPPORT” mode with CONSULT-III.
9. Following the instruction of CONSULT-III.
   NOTE:
   It will take at most 10 minutes until “COMPLETED” is displayed.
10. Make sure that “OK” is displayed after touching “ON-BOARD DIAGNOSIS”.
    If “NG” is displayed, refer to EC-253, "Diagnosis Procedure".
    If “CAN NOT BE DIAGNOSED” is displayed, perform the following.

a. Turn ignition switch OFF and leave the vehicle in a cool place (soak the vehicle).
b. Return to step 1.

Overall Function Check

INFOID:0000000005284730

Use this procedure to check the overall function of the heated oxygen sensor 2 circuit. During this check, a 1st trip DTC might not be confirmed.

WITH GST

1. Start engine and warm it up to the normal operating temperature.
2. Turn ignition switch OFF and wait at least 10 seconds.
3. Start engine and keep the engine speed between 3,500 and 4,000 rpm for at least 1 minute under no load.
4. Let engine idle 1 minute.
5. Set voltmeter probes between ECM terminal 50 (HO2S2 signal) and ground.
6. Check the voltage when revving up to 4,000 rpm under no load at least 10 times.
   (Depress and release accelerator pedal as soon as possible.)
   The voltage should be above 0.72 V at least once during this procedure.
   If the voltage can be confirmed in step 6, step 7 is not necessary.
7. Keep vehicle idling for 10 minutes, then check the voltage. Or check the voltage when coasting from 80 km/h (50 MPH) in D position (CVT) or 3rd gear position (M/T).
   The voltage should be above 0.72 V at least once during this procedure.
8. If NG, go to EC-253, "Diagnosis Procedure".

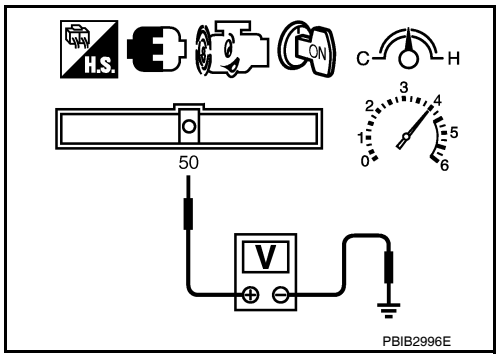

Wiring Diagram

INFOID:0000000005284731

EC-HO2S2-01

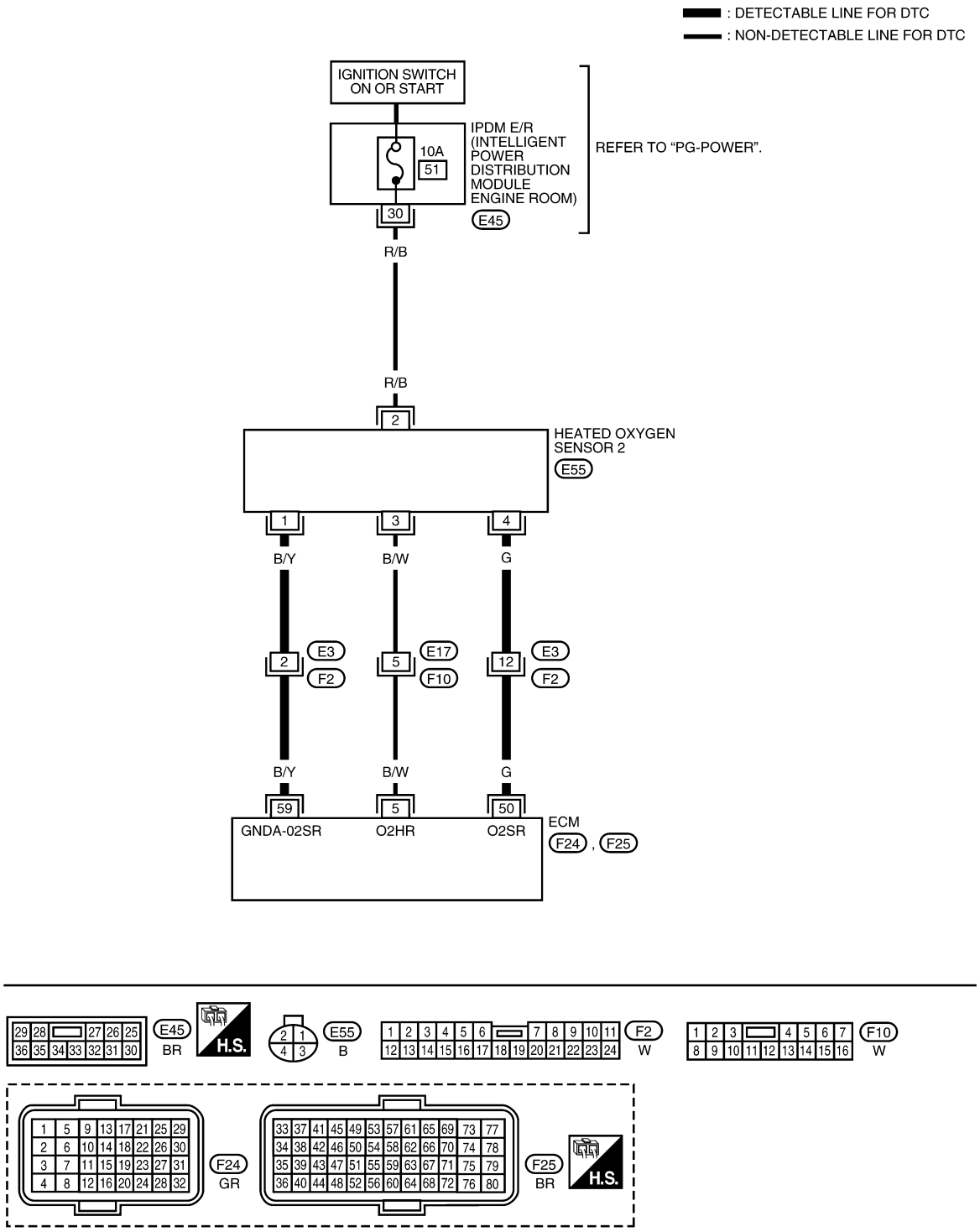

Specification data are reference values and are measured between each terminal and ground.
Pulse signal is measured by CONSULT-III.

CAUTION:

Do not use ECM ground terminals when measuring input/output voltage. Doing so may result in damage to the ECM's transistor. Use a ground other than ECM terminals, such as the ground.

TERMINAL NO.	WIRE COLOR	ITEM	CONDITION	DATA (DC Voltage)
5	B/W	Heated oxygen sensor 2 heater	**[Engine is running]** • Engine speed: Below 3,600 rpm after the following conditions are met. - Engine: After warming up - Keeping the engine speed between 3,500 and 4,000 rpm for 1 minute and at idle for 1 minute under no load.	Approximately 10 V★ 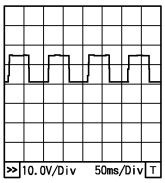 PBIA8148J
			[Ignition switch: ON] • Engine stopped **[Engine is running]** • Engine speed: Above 3,600 rpm.	BATTERY VOLTAGE (11 - 14 V)
50	G	Heated oxygen sensor 2	**[Engine is running]** • Revving engine from idle to 3,000 rpm quickly after the following conditions are met. - Engine: After warming up - Keeping the engine speed between 3,500 and 4,000 rpm for 1 minute and at idle for 1 minute under no load.	0 - Approximately 1.0 V
59	B/Y	Sensor ground (Heated oxygen sensor 2)	**[Engine is running]** • **Warm-up condition** • Idle speed	Approximately 0 V

★: Average voltage for pulse signal (Actual pulse signal can be confirmed by oscilloscope.)

Diagnosis Procedure

INFOID:0000000005284732

1. CHECK GROUND CONNECTIONS

1. Turn ignition switch OFF.
2. Loosen and retighten ground screw on the body.
   Refer to EC-157, "Ground Inspection".

- ⇦ : Vehicle front
- Body ground (1)

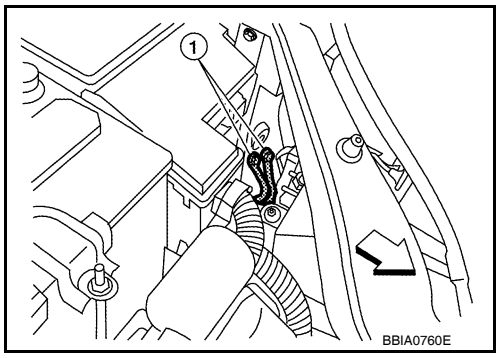

OK or NG

OK >> GO TO 2.
NG >> Repair or replace ground connections.

2. CLEAR THE SELF-LEARNING DATA

With CONSULT-III

1. Start engine and warm it up to normal operating temperature.
2. Select “SELF-LEARNING CONT” in “WORK SUPPORT” mode with CONSULT-III.
3. Clear the self-learning control coefficient by touching “CLEAR”.
4. Run engine for at least 10 minutes at idle speed.
   Is the 1st trip DTC P0171 detected?
   Is it difficult to start engine?

Without CONSULT-III

1. Start engine and warm it up to normal operating temperature.
2. Turn ignition switch OFF.

3. Disconnect mass air flow sensor (1) harness connector, and restart and run engine for at least 5 seconds at idle speed.
4. Stop engine and reconnect mass air flow sensor harness connector.
5. Make sure DTC P0102 is displayed.
6. Erase the DTC memory. Refer to EC-62, "Emission-related Diagnostic Information".
7. Make sure DTC P0000 is displayed.
8. Run engine for at least 10 minutes at idle speed.
Is the 1st trip DTC P0171 detected?
Is it difficult to start engine?

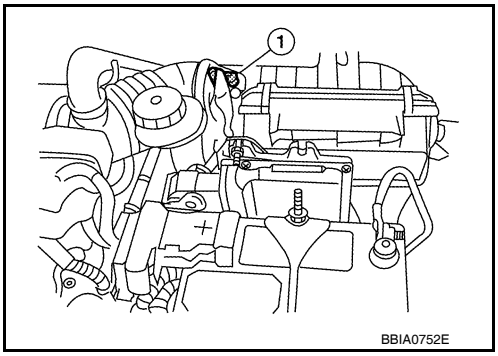

Yes or No

Yes >> Perform trouble diagnosis for DTC P0171. Refer to EC-275.
No >> GO TO 3.

3. CHECK HO2S2 GROUND CIRCUIT FOR OPEN AND SHORT

1. Turn ignition switch OFF.
2. Disconnect heated oxygen sensor 2 harness connector (2).
- ⇦ : Vehicle front
- Heated oxygen sensor 2 (1)
3. Disconnect ECM harness connector.
4. Check harness continuity between ECM terminal 59 and HO2S2 terminal 1. Refer to Wiring Diagram.

Continuity should exist.

5. Also check harness for short to ground and short to power.

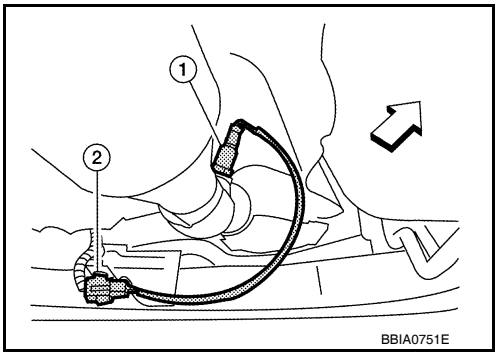

OK or NG

OK >> GO TO 5.
NG >> GO TO 4.

4. DETECT MALFUNCTIONING PART

Check the following.
- Harness connectors E3, F2
- Harness for open circuit or short between heated oxygen sensor 2 and ECM.

>> Repair open circuit or short to ground or short to power in harness or connectors.

5. CHECK HO2S2 INPUT SIGNAL CIRCUIT FOR OPEN AND SHORT

1. Check harness continuity between ECM terminal 50 and HO2S2 terminal 4. Refer to Wiring Diagram.

Continuity should exist.

2. Check harness continuity between ECM terminal 50 or HO2S2 terminal 4 and ground. Refer to Wiring Diagram.

Continuity should not exist.

3. Also check harness for short to power.

OK or NG

OK >> GO TO 7.
NG >> GO TO 6.

6. DETECT MALFUNCTIONING PART

Check the following.
- Harness connectors E3, F2
- Harness for open circuit or short between heated oxygen sensor 2 and ECM.

>> Repair open circuit or short to ground or short between heated oxygen sensor 2 and ECM.

7. CHECK HEATED OXYGEN SENSOR 2

Refer to EC-255, "Component Inspection".

OK or NG

OK >> GO TO 6.
NG >> Replace heated oxygen sensor 2.

8. CHECK INTERMITTENT INCIDENT

Refer to EC-152.

>> **INSPECTION END**

Component Inspection

INFOID:0000000005284733

HEATED OXYGEN SENSOR 2

WITH CONSULT-III

1. Start engine and warm it up to the normal operating temperature.
2. Turn ignition switch OFF and wait at least 10 seconds.
3. Start engine and keep the engine speed between 3,500 and 4,000 rpm for at least 1 minute under no load.
4. Let engine idle for 1 minute.
5. Select “FUEL INJECTION” in “ACTIVE TEST” mode, and select “HO2S2 (B1)” as the monitor item with CONSULT-III.
6. Check “HO2S2 (B1)” at idle speed when adjusting “FUEL INJECTION” to ±25%.

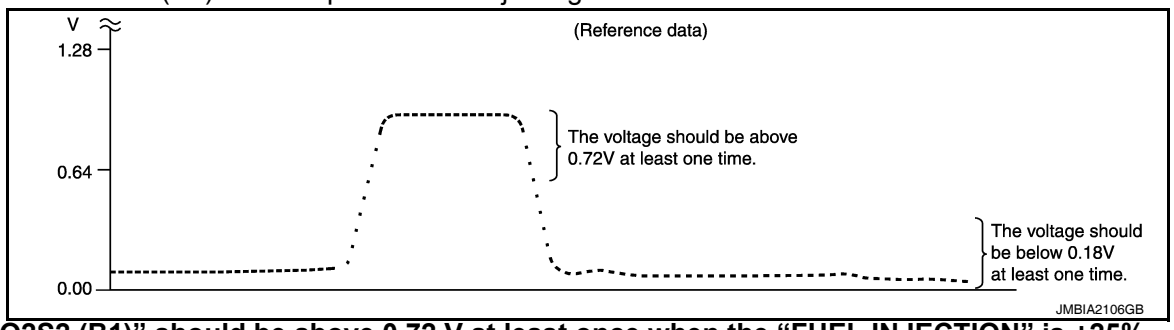

“HO2S2 (B1)” should be above 0.72 V at least once when the “FUEL INJECTION” is +25%.
“HO2S2 (B1)” should be below 0.18 V at least once when the “FUEL INJECTION” is –25%.

CAUTION:

- **Discard any heated oxygen sensor which has been dropped from a height of more than 0.5 m (19.7 in) onto a hard surface such as a concrete floor; use a new one.**
- **Before installing new oxygen sensor, clean exhaust system threads using Oxygen Sensor Thread Cleaner tool J-43897-18 or J-43897-12 and approved anti-seize lubricant.**

WITHOUT CONSULT-III

1. Start engine and warm it up to the normal operating temperature.
2. Turn ignition switch OFF and wait at least 10 seconds.
3. Start engine and keep the engine speed between 3,500 and 4,000 rpm for at least 1 minute under no load.
4. Let engine idle for 1 minute.
5. Set voltmeter probes between ECM terminal 50 (HO2S2 signal) and ground.

6. Check the voltage when revving up to 4,000 rpm under no load at least 10 times.
   (Depress and release accelerator pedal as soon as possible.)
   The voltage should be above 0.72 V and below 0.18 V at least once during this procedure.
   If the voltage can be confirmed at step 6, step 7 is not necessary.
7. Keep vehicle idling for 10 minutes, then check voltage. Or check the voltage when coasting from 80 km/h (50 MPH) in D position (CVT) or 3rd gear position (M/T).
   The voltage should be above 0.72 V and below 0.18 V at least once during this procedure.

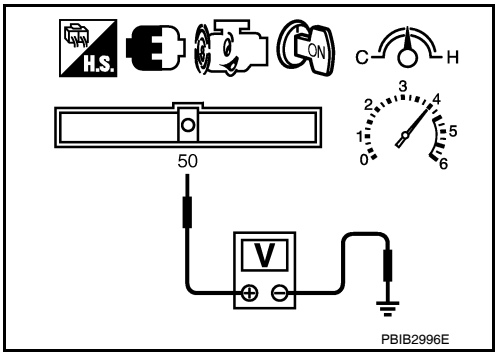

8. If NG, replace heated oxygen sensor 2.
   CAUTION:
   - **Discard any heated oxygen sensor which has been dropped from a height of more than 0.5 m (19.7 in) onto a hard surface such as a concrete floor; use a new one.**
   - **Before installing new oxygen sensor, clean exhaust system threads using Oxygen Sensor Thread Cleaner tool J-43897-18 or J-43897-12 and approved anti-seize lubricant.**

Removal and Installation

INFOID:0000000005284734

HEATED OXYGEN SENSOR 2

Refer to EM-23.

DTC P0138 HO2S2

Component Description

INFOID:0000000005284735

The heated oxygen sensor 2, after three way catalyst (manifold), monitors the oxygen level in the exhaust gas.
Even if switching characteristics of the air fuel ratio (A/F) sensor 1 are shifted, the air/fuel ratio is controlled to stoichiometric, by the signal from the heated oxygen sensor 2.
This sensor is made of ceramic zirconia. The zirconia generates voltage from approximately 1 V in richer conditions to 0 V in leaner conditions.
Under normal conditions the heated oxygen sensor 2 is not used for engine control operation.

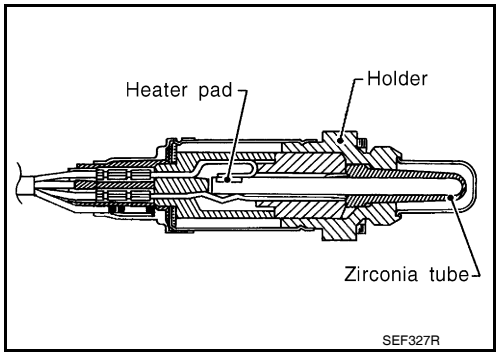

CONSULT-III Reference Value in Data Monitor Mode

INFOID:0000000005284736

Specification data are reference values.

Monitor item	Condition	Specification
HO2S2 (B1)	• Revving engine from idle to 3,000 rpm quickly after the following conditions are met. - Engine: After warming up - Keeping the engine speed between 3,500 and 4,000 rpm for 1 minute and at idle for 1 minute under no load	0 - 0.3 V ←→ Approx. 0.6 - 1.0 V
HO2S2 MNTR (B1)		LEAN ←→ RICH

On Board Diagnosis Logic

INFOID:0000000005284737

The heated oxygen sensor 2 has a much longer switching time between rich and lean than the air fuel ratio (A/F) sensor 1. The oxygen storage capacity before the three way catalyst (manifold) causes the longer switching time.

MALFUNCTION A

To judge the malfunctions of rear heated oxygen sensor 2, ECM monitors whether the voltage is unusually high during the various driving condition such as fuel-cut.

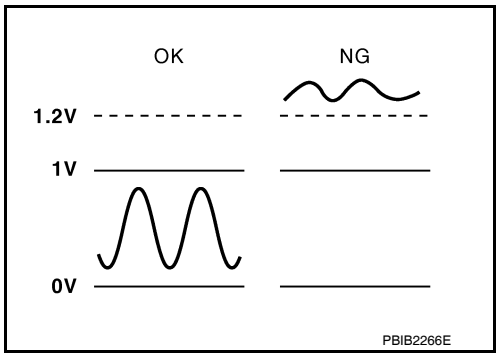

MALFUNCTION B

To judge the malfunctions of heated oxygen sensor 2, ECM monitors whether the minimum voltage of sensor is sufficiently low during the various driving condition such as fuel-cut.

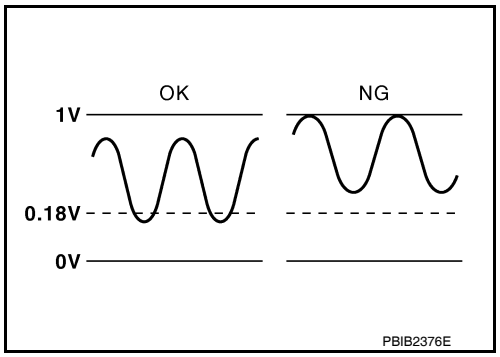

DTC No.	Trouble diagnosis name	DTC detecting condition		Possible cause
P0138 0138	Heated oxygen sensor 2 circuit high voltage	A)	An excessively high voltage from the sensor is sent to ECM.	• Harness or connectors (Heated oxygen sensor 2 circuit is open or shorted.) • Heated oxygen sensor 2
		B)	The minimum voltage from the sensor is not reached to the specified voltage.	• Harness or connectors (Heated oxygen sensor circuit is open or shorted.) • Heated oxygen sensor 2 • Fuel pressure • Fuel injector

DTC Confirmation Procedure

INFOID:0000000005284738

Perform PROCEDURE FOR MALFUNCTION A first.
If DTC cannot be confirmed, perform PROCEDURE FOR MALFUNCTION B.
NOTE:
If DTC Confirmation Procedure has been previously conducted, always turn ignition switch OFF and wait at least 10 seconds before conducting the next test.

PROCEDURE FOR MALFUNCTION A

WITH CONSULT-III

1. Turn ignition switch ON and select “DATA MONITOR” mode with CONSULT-III.
2. Start engine and warm it up to the normal operating temperature.
3. Turn ignition switch OFF and wait at least 10 seconds.
4. Start engine and keep the engine speed between 3,500 and 4,000 rpm for at least 1 minute under no load.
5. Let engine idle for 2 minutes.
6. Check 1st trip DTC.
7. If 1st trip DTC is detected, go to EC-261, "Diagnosis Procedure".

WITH GST

Follow the procedure “With CONSULT-III” above.

PROCEDURE FOR MALFUNCTION B

WITH CONSULT-III

TESTING CONDITION:
For the best results, perform DTC WORK SUPPORT at a temperature of 0 to 30°C (32 to 86°F).

1. Turn ignition switch ON and select “DATA MONITOR ” mode with CONSULT-III
2. Start engine and warm it up to the normal operating temperature.
3. Turn ignition switch OFF and wait at least 10 seconds.
4. Start engine and keep the engine speed between 3,500 and 4,000 rpm for at least 1 minute under no load.
5. Let engine idle for 1 minute.
6. Make sure that “COOLAN TEMP/S” indicates more than 70°C (158°F).
   If not, warm up engine and go to next step when “COOLAN TEMP/S” indication reaches to 70°C (158°F).
7. Open engine hood.
8. Select “HO2S2 (B1) P1146” (for DTC P0138) of “HO2S2” in “DTC WORK SUPPORT” mode with CONSULT-III.
9. Following the instruction of CONSULT-III.
   NOTE:
   It will take at most 10 minutes until “COMPLETED” is displayed.
10. Make sure that “OK” is displayed after touching “ON-BOARD DIAGNOSIS”.
    If “NG” is displayed, refer to EC-261, "Diagnosis Procedure".
    If “CAN NOT BE DIAGNOSED” is displayed, perform the following.

a. Turn ignition switch OFF and leave the vehicle in a cool place (soak the vehicle).
b. Return to step 1.

Overall Function Check

INFOID:0000000005284739

PROCEDURE FOR MALFUNCTION B

Use this procedure to check the overall function of the heated oxygen sensor 2 circuit. During this check, a 1st trip DTC might not be confirmed.

WITH GST

1. Start engine and warm it up to the normal operating temperature.
2. Turn ignition switch OFF and wait at least 10 seconds.
3. Start engine and keep the engine speed between 3,500 and 4,000 rpm for at least 1 minute under no load.
4. Let engine idle 1 minute.
5. Set voltmeter probes between ECM terminal 50 (HO2S2 signal) and ground.
6. Check the voltage when revving up to 4,000 rpm under no load at least 10 times.
   (Depress and release accelerator pedal as soon as possible.)
   The voltage should be below 0.18 V at least once during this procedure.
   If the voltage can be confirmed in step 6, step 7 is not necessary.
7. Keep vehicle at idling for 10 minutes, then check the voltage. Or check the voltage when coasting from 80 km/h (50 MPH) in D position (CVT) or 3rd gear position (M/T).
   The voltage should be below 0.18 V at least once during this procedure.
8. If NG, go to EC-261, "Diagnosis Procedure".

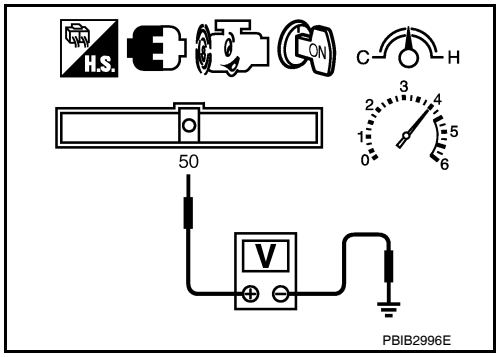

Wiring Diagram

INFOID:0000000005284740

EC-HO2S2-01

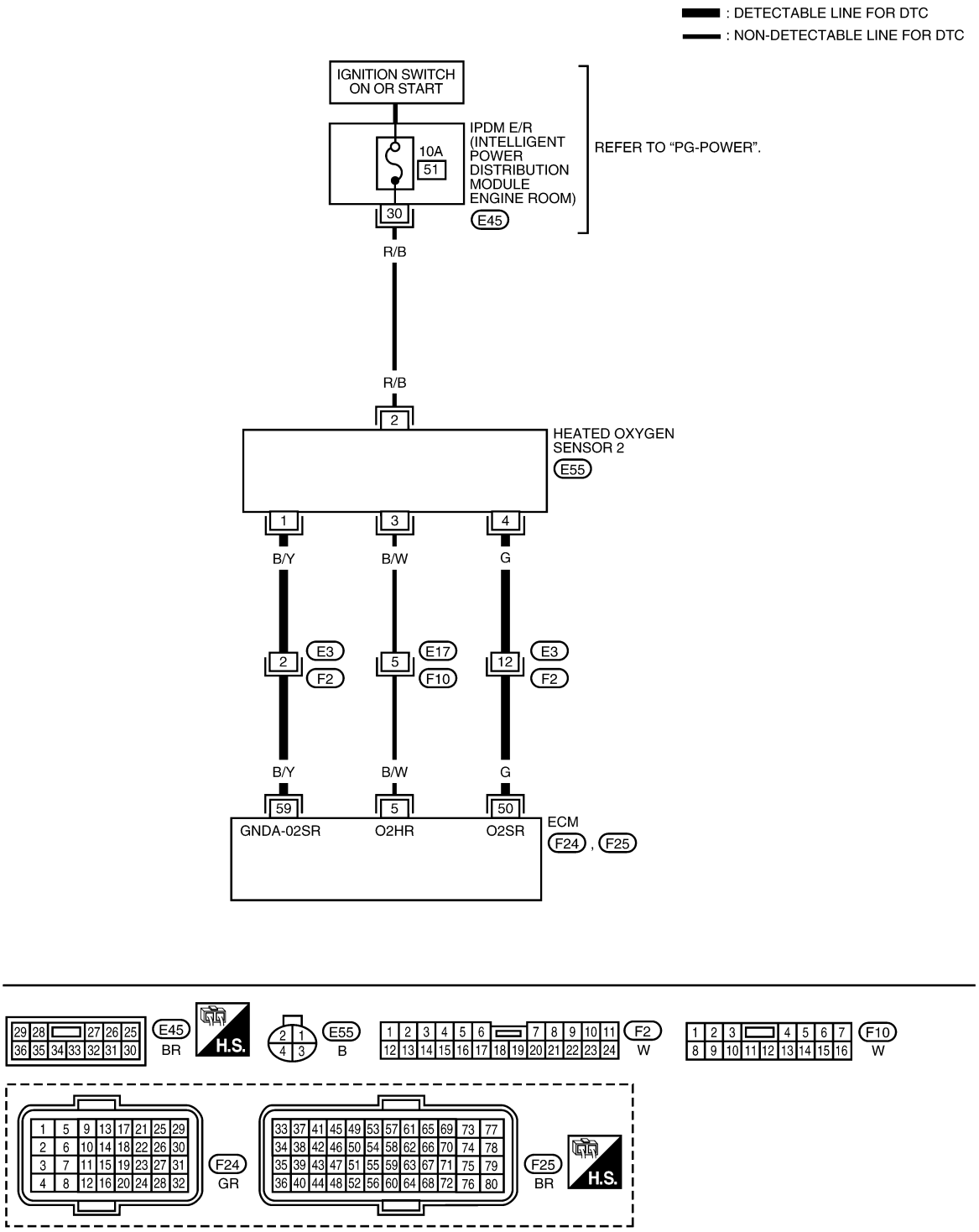

Specification data are reference values and are measured between each terminal and ground.
Pulse signal is measured by CONSULT-III.

CAUTION:

Do not use ECM ground terminals when measuring input/output voltage. Doing so may result in damage to the ECM's transistor. Use a ground other than ECM terminals, such as the ground.

TERMINAL NO.	WIRE COLOR	ITEM	CONDITION	DATA (DC Voltage)
5	B/W	Heated oxygen sensor 2 heater	**[Engine is running]** • Engine speed: Below 3,600 rpm after the following conditions are met. - Engine: After warming up - Keeping the engine speed between 3,500 and 4,000 rpm for 1 minute and at idle for 1 minute under no load.	Approximately 10 V★ 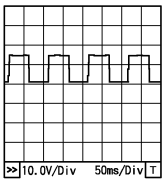 PBIA8148J
			[Ignition switch: ON] • Engine stopped **[Engine is running]** • Engine speed: Above 3,600 rpm.	BATTERY VOLTAGE (11 - 14 V)
50	G	Heated oxygen sensor 2	**[Engine is running]** • Revving engine from idle to 3,000 rpm quickly after the following conditions are met. - Engine: After warming up - Keeping the engine speed between 3,500 and 4,000 rpm for 1 minute and at idle for 1 minute under no load.	0 - Approximately 1.0 V
59	B/Y	Sensor ground (Heated oxygen sensor 2)	**[Engine is running]** • **Warm-up condition** • Idle speed	Approximately 0 V

★: Average voltage for pulse signal (Actual pulse signal can be confirmed by oscilloscope.)

Diagnosis Procedure

INFOID:0000000005284741

PROCEDURE FOR MALFUNCTION A

1. CHECK GROUND CONNECTIONS

1. Turn ignition switch OFF.
2. Loosen and retighten engine screws on the body.
   Refer to EC-157, "Ground Inspection".

- ⇦ : Vehicle front
- Body ground (1)

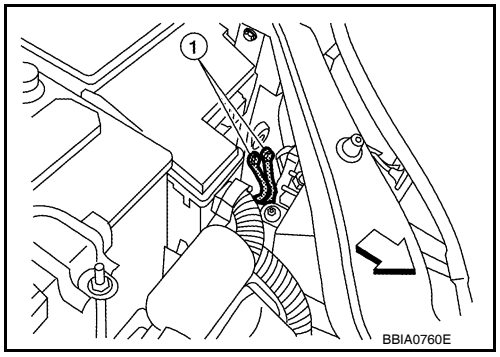

OK or NG

OK >> GO TO 2.
NG >> Repair or replace ground connections.

2. CHECK HO2S2 GROUND CIRCUIT FOR OPEN AND SHORT

1. Disconnect heated oxygen sensor 2 harness connector (2).
- ⇦ : Vehicle front
- Heated oxygen sensor 2 (1)
2. Disconnect ECM harness connector.
3. Check harness continuity between ECM terminal 59 and HO2S2 terminal 1. Refer to Wiring Diagram.

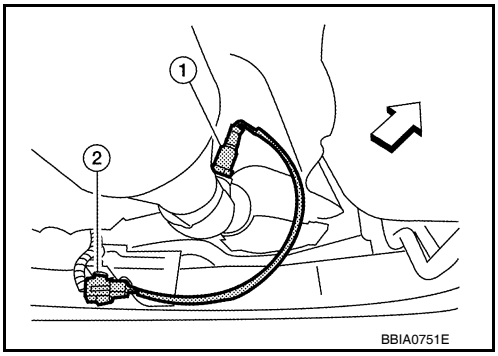

Continuity should exist.

4. Also check harness for short to ground and short to power.

OK or NG

OK >> GO TO 4.
NG >> GO TO 3.

3. DETECT MALFUNCTIONING PART

Check the following.
- Harness connectors E3, F2
- Harness for open circuit or short between heated oxygen sensor 2 and ECM.

>> Repair open circuit or short to ground or short to power in harness or connectors.

4. CHECK HO2S2 INPUT SIGNAL CIRCUIT FOR OPEN AND SHORT

1. Check harness continuity between ECM terminal 50 and HO2S2 terminal 4. Refer to Wiring Diagram.

Continuity should exist.

2. Check harness continuity between ECM terminal 50 or HO2S2 terminal 4 and ground. Refer to Wiring Diagram.

Continuity should not exist.

3. Also check harness for short to power.

OK or NG

OK >> GO TO 6.
NG >> GO TO 5.

5. DETECT MALFUNCTIONING PART

Check the following.
- Harness connectors E3, F2
- Harness for open circuit or short between heated oxygen sensor 2 and ECM.

>> Repair open circuit or short to ground or short to power in harness or connectors.

6. CHECK HO2S2 CONNECTOR FOR WATER

Check connectors for water.

Water should not exist.

OK or NG

OK >> GO TO 7.
NG >> Repair or replace harness or connectors.

7. CHECK HEATED OXYGEN SENSOR 2

Refer to EC-264, "Component Inspection".

OK or NG

OK >> GO TO 8.
NG >> Replace heated oxygen sensor 2.

8. CHECK INTERMITTENT INCIDENT

Refer to EC-152.

>> **INSPECTION END**

PROCEDURE FOR MALFUNCTION B

1. CHECK GROUND CONNECTIONS

1. Turn ignition switch OFF.
2. Loosen and retighten engine screws on the body.
   Refer to EC-157, "Ground Inspection".

- ⇦ : Vehicle front
- Body ground (1)

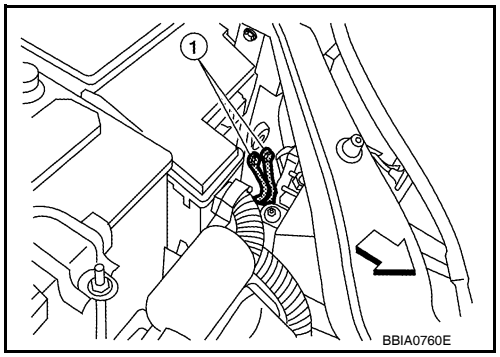

OK or NG

OK >> GO TO 2.
NG >> Repair or replace ground connections.

2. CLEAR THE SELF-LEARNING DATA

With CONSULT-III

1. Start engine and warm it up to normal operating temperature.
2. Select “SELF-LEARNING CONT” in “WORK SUPPORT” mode with CONSULT-III.
3. Clear the self-learning control coefficient by touching “CLEAR”.
4. Run engine for at least 10 minutes at idle speed.
   Is the 1st trip DTC P0172 detected?
   Is it difficult to start engine?

Without CONSULT-III

1. Start engine and warm it up to normal operating temperature.
2. Turn ignition switch OFF.
3. Disconnect mass air flow sensor (1) harness connector, and restart and run engine for at least 5 seconds at idle speed.
4. Stop engine and reconnect mass air flow sensor harness connector.
5. Make sure that DTC P0102 is displayed.
6. Erase the DTC memory. Refer to EC-62, "Emission-related Diagnostic Information".
7. Make sure that DTC P0000 is displayed.
8. Run engine for at least 10 minutes at idle speed.
   Is the 1st trip DTC P0172 detected?
   Is it difficult to start engine?

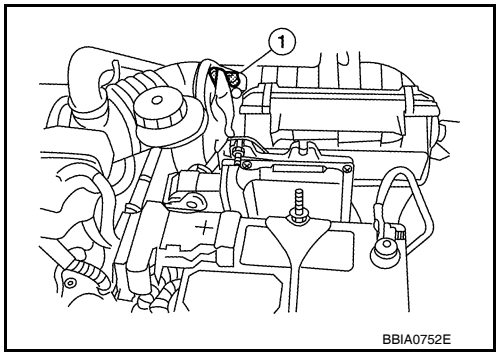

Yes or No

Yes >> Perform trouble diagnosis for DTC P0172. Refer to EC-281.
No >> GO TO 3.

3. CHECK HO2S2 GROUND CIRCUIT FOR OPEN AND SHORT

1. Turn ignition switch OFF.
2. Disconnect heated oxygen sensor 2 harness connector (2).

- ⇦ : Vehicle front
- Heated oxygen sensor 2 (1)

3. Disconnect ECM harness connector.
4. Check harness continuity between ECM terminal 59 and HO2S2 terminal 1. Refer to Wiring Diagram.

   Continuity should exist.

5. Also check harness for short to ground and short to power.

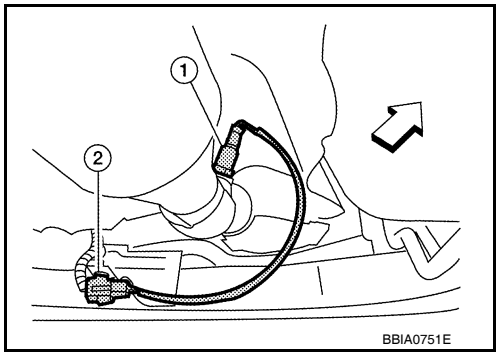

OK or NG

OK >> GO TO 5.
NG >> GO TO 4.

4. CHECK MALFUNCTIONING PART

Check the following.
- Harness connectors E3, F2
- Harness for open circuit or short between heated oxygen sensor 2 and ECM.

>> Repair open circuit or short to ground or short to power in harness or connectors.

5. CHECK HO2S2 INPUT SIGNAL CIRCUIT FOR OPEN AND SHORT

1. Check harness continuity between ECM terminal 50 and HO2S2 terminal 4.
   Refer to Wiring Diagram.

   Continuity should exist.

2. Check harness continuity between ECM terminal 50 or HO2S2 terminal 4 and ground.
   Refer to Wiring Diagram.

   Continuity should not exist.

3. Also check harness for short to power.

OK or NG

OK >> GO TO 7.
NG >> GO TO 6.

6. CHECK MALFUNCTIONING PART

Check the following.
- Harness connectors E3, F2
- Harness for open circuit or short between heated oxygen sensor 2 and ECM.

>> Repair open circuit or short to ground or short to power in harness or connectors.

7. CHECK HEATED OXYGEN SENSOR 2

Refer to EC-264, "Component Inspection".

OK or NG

OK >> GO TO 8.
NG >> Replace heated oxygen sensor 2.

8. CHECK INTERMITTENT INCIDENT

Refer to EC-152.

>> **INSPECTION END**

Component Inspection

INFOID:0000000005284742

HEATED OXYGEN SENSOR 2

WITH CONSULT-III

1. Start engine and warm it up to the normal operating temperature.
2. Turn ignition switch OFF and wait at least 10 seconds.
3. Start engine and keep the engine speed between 3,500 and 4,000 rpm for at least 1 minute under no load.
4. Let engine idle for 1 minute.
5. Select “FUEL INJECTION” in “ACTIVE TEST” mode, and select “HO2S2 (B1)” as the monitor item with CONSULT-III.

6. Check “HO2S2 (B1)” at idle speed when adjusting “FUEL INJECTION” to ±25%.

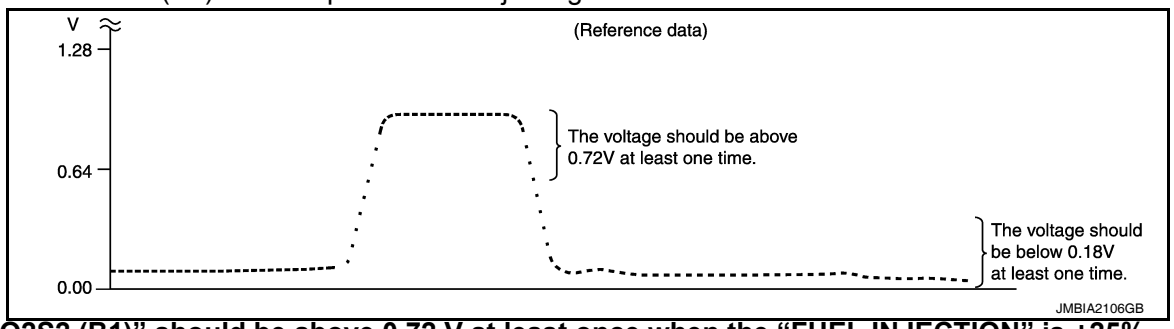

“HO2S2 (B1)” should be above 0.72 V at least once when the “FUEL INJECTION” is +25%.
“HO2S2 (B1)” should be below 0.18 V at least once when the “FUEL INJECTION” is –25%.

CAUTION:
- **Discard any heated oxygen sensor which has been dropped from a height of more than 0.5 m (19.7 in) onto a hard surface such as a concrete floor; use a new one.**
- **Before installing new oxygen sensor, clean exhaust system threads using Oxygen Sensor Thread Cleaner tool J-43897-18 or J-43897-12 and approved anti-seize lubricant.**

WITHOUT CONSULT-III

1. Start engine and warm it up to the normal operating temperature.
2. Turn ignition switch OFF and wait at least 10 seconds.
3. Start engine and keep the engine speed between 3,500 and 4,000 rpm for at least 1 minute under no load.
4. Let engine idle for 1 minute.
5. Set voltmeter probes between ECM terminal 50 (HO2S2 signal) and ground.
6. Check the voltage when revving up to 4,000 rpm under no load at least 10 times.
   (Depress and release accelerator pedal as soon as possible.)
   The voltage should be above 0.72 V and below 0.18 V at least once during this procedure.
   If the voltage can be confirmed at step 6, step 7 is not necessary.

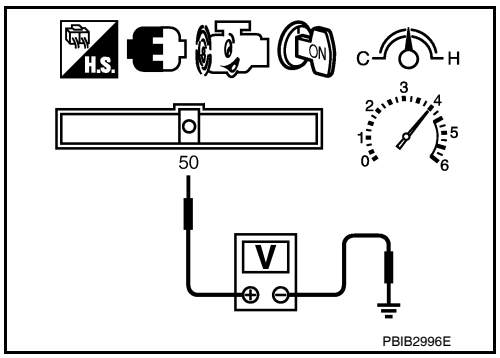

7. Keep vehicle idling for 10 minutes, then check voltage. Or check the voltage when coasting from 80 km/h (50 MPH) in D position (CVT) or 3rd gear position (M/T).
   The voltage should be above 0.72 V and below 0.18 V at least once during this procedure.
8. If NG, replace heated oxygen sensor 2.

CAUTION:
- **Discard any heated oxygen sensor which has been dropped from a height of more than 0.5 m (19.7 in) onto a hard surface such as a concrete floor; use a new one.**
- **Before installing new oxygen sensor, clean exhaust system threads using Oxygen Sensor Thread Cleaner tool J-43897-18 or J-43897-12 and approved anti-seize lubricant.**

Removal and Installation

INFOID:0000000005284743

HEATED OXYGEN SENSOR 2

Refer to EM-23.

DTC P0139 HO2S2

Component Description

INFOID:0000000005284744

The heated oxygen sensor 2, after three way catalyst (manifold), monitors the oxygen level in the exhaust gas.
Even if switching characteristics of the air fuel ratio (A/F) sensor 1 are shifted, the air/fuel ratio is controlled to stoichiometric, by the signal from the heated oxygen sensor 2.
This sensor is made of ceramic zirconia. The zirconia generates voltage from approximately 1 V in richer conditions to 0 V in leaner conditions.
Under normal conditions the heated oxygen sensor 2 is not used for engine control operation.

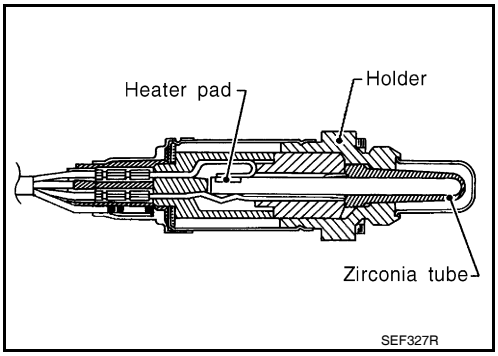

CONSULT-III Reference Value in Data Monitor Mode

INFOID:0000000005284745

Specification data are reference values.

Monitor item	Condition	Specification
HO2S2 (B1)	• Revving engine from idle to 3,000 rpm quickly after the following conditions are met. - Engine: After warming up - Keep the engine speed between 3,500 rpm and 4,000 rpm for 1 minute and idle for 1 minute under no load	0 - 0.3 V ←→ Approx. 0.6 - 1.0 V
HO2S2 MNTR (B1)		LEAN ←→ RICH
HO2 S2 DIAG1 (B1)	DTC P0139 self-diagnosis (delayed response) is incomplete.	INCMP
	DTC P0139 self-diagnosis (delayed response) is complete.	CMPLT
HO2 S2 DIAG2 (B1)	DTC P0139 self-diagnosis (slow response) is incomplete.	INCMP
	DTC P0139 self-diagnosis (slow response) is complete.	CMPLT

On Board Diagnosis Logic

INFOID:0000000005284746

The heated oxygen sensor 2 has a much longer switching time between rich and lean than the air fuel ratio (A/F) sensor 1. The oxygen storage capacity of the three way catalyst 1 causes the longer switching time. To judge the malfunctions of heated oxygen sensor 2, ECM monitors whether the switching response of the sensor's voltage is faster than specified during various driving conditions such as fuel cut.

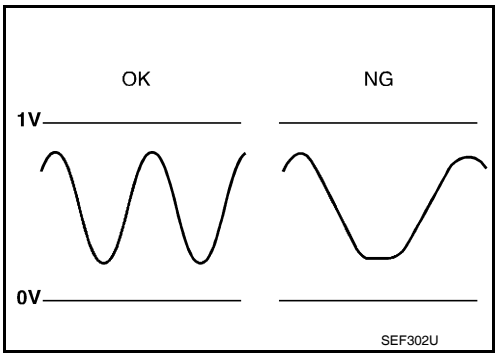

DTC No.	Trouble diagnosis name	DTC detecting condition	Possible cause
P0139 0139	Heated oxygen sensor 2 (bank 1) circuit slow response	The switching time between rich and lean of a heated oxygen sensor 2 signal delays more than the specified time computed by ECM.	• Harness or connectors (The sensor circuit is open or shorted) • Heated oxygen sensor 2 • Fuel system • EVAP system • Intake air system

DTC Confirmation Procedure

INFOID:0000000005284747

1. INSPECTION START

Do you have CONSULT-III?

Do you have CONSULT-III?

YES >> GO TO 2.
NO >> GO TO 7.

2. PRECONDITIONING

If DTC Confirmation Procedure has been previously conducted, always perform the following procedure before conducting the next test.

1. Turn ignition switch OFF and wait at least 10 seconds.
2. Turn ignition switch ON.
3. Turn ignition switch OFF and wait at least 10 seconds.

TESTING CONDITION:
For better results, perform "DTC WORK SUPPORT" at a temperature of 0 to 30°C (32 to 86°F).

>> GO TO 3.

3. PERFORM DTC CONFIRMATION PROCEDURE

With CONSULT-III

1. Turn ignition switch ON and select "DATA MONITOR" mode with CONSULT-III.
2. Start engine and warm it up to the normal operating temperature.
3. Turn ignition switch OFF and wait at least 10 seconds.
4. Turn ignition switch ON.
5. Turn ignition switch OFF and wait at least 10 seconds.
6. Start engine and keep the engine speed between 3,500 and 4,000 rpm for at least 1 minute under no load.
7. Let engine idle for 1 minute.
8. Make sure that "COOLAN TEMP/S" indicates more than 70°C (158°F).
9. Drive the vehicle in a proper at 60 km/h (38MPH) and maintain the speed.
   CAUTION:
   Always drive vehicle at a safe speed.
10. Release the accelerator pedal fully at least 5 seconds.
    CAUTION:
    - **Enable engine brake.**
    - **Always drive carefully.**
    - **Never apply brake when releasing the accelerator pedal.**
11. Repeat step 9 and 10 at least 8 times.
12. Check the following item of "DATA MONITOR".

Data monitor item	Status
HO2 S2 DIAG1 (B1)	CMPLT
HO2 S2 DIAG2 (B1)	

Is "CMPLT" displayed on CONSULT-III screen?

YES >> GO TO 6.
NO-1: "CMPLT" is not displayed on DIAG 1>>Perform DTC confirmation procedure again.
NO-2: "CMPLT" is not displayed on DIAG 2>>GO TO 4.

4. PERFORM DTC WORK SUPPORT

1. Open engine hood.
2. Select "HO2S2 (B1) P0139" in "DTC WORK SUPPORT" mode with CONSULT-III.
3. Start engine and follow the instruction of CONSULT-III display.
   NOTE:
   It will take at most 10 minutes until "COMPLETED" is displayed.

Is "COMPLETED" displayed on CONSULT-III screen?

YES >> GO TO 6.
NO >> GO TO 5.

5. PERFORM DTC CONFIRMATION PROCEDURE AGAIN

1. Turn ignition switch OFF and leave the vehicle in a cool place (soak the vehicle).
2. Perform DTC confirmation procedure again.

>> GO TO 3.

6. PERFORM SELF-DIAGNOSIS

With CONSULT-III

Perform ECM self-diagnosis.

Is DTC "P0139" detected?

YES >> Proceed to EC-271, "Diagnosis Procedure".
NO >> INSPECTION END

7. PERFORM OVERALL FUNCTION CHECK

Perform overall function check. Refer to EC-268, "Overall Function Check".

NOTE:

Use overall function check to check the overall function of the heated oxygen sensor 2 circuit. During this check, a 1st trip DTC might not be confirmed.

Is the inspection result normal?

YES >> INSPECTION END
NO >> Proceed to EC-271, "Diagnosis Procedure".

WITH CONSULT-III

TESTING CONDITION:

For better results, perform "DTC WORK SUPPORT" at a temperature of 0 to 30 °C (32 to 86 °F).

1. Turn ignition switch ON and select "DATA MONITOR" mode with CONSULT-III.
2. Start engine and warm it up to the normal operating temperature.
3. Turn ignition switch OFF and wait at least 10 seconds.
4. Start engine and keep the engine speed between 3,500 and 4,000 rpm for at least 1 minute under no load.
5. Let engine idle for 1 minute.
6. Make sure that "COOLAN TEMP/S" indicates more than 70°C (158°F).
   If not, warm up engine and go to next step when "COOLAN TEMP/S" indication reaches to 70°C (158°F).
7. Select "HO2S2 (B1) P0139" of "HO2S2" in "DTC WORK SUPPORT" mode with CONSULT-III.
8. Following the instruction of CONSULT-III.
   NOTE:
   It will take at most 10 minutes until "COMPLETED" is displayed.
9. Make sure that "OK" is displayed after touching "ON-BOARD DIAGNOSIS".
   If "NG" is displayed, refer to EC-271, "Diagnosis Procedure".
   If "CAN NOT BE DIAGNOSED" is displayed, perform the following.

a. Turn ignition switch OFF and leave the vehicle in a cool place (soak the vehicle).
b. Return to step 1.

Overall Function Check

INFOID:0000000005284748

Use this procedure to check the overall function of the heated oxygen sensor 2 circuit. During this check, a 1st trip DTC might not be confirmed.

WITH GST

1. Start engine and warm it up to the normal operating temperature.
2. Turn ignition switch OFF and wait at least 10 seconds.
3. Start engine and keep the engine between 3,500 and 4,000 rpm for at least 1 minute under no load.
4. Let engine idle for 1 minute.
5. Set voltmeter probes between ECM terminal 50 (HO2S2 signal) and ground.

6. Check the voltage when revving up to 4,000 rpm under no load at least 10 times.
   (Depress and release accelerator pedal as soon as possible.)
   A change of voltage should be more than 0.8 V for 1 second during this procedure.
   If the voltage can be confirmed in step 6, step 7 is not necessary.
7. Keep vehicle at idling for 10 minutes, then check the voltage. Or check the voltage when coasting from 80 km/h (50 MPH) in D position (CVT) or 3rd gear position (M/T).
   A change of voltage should be more than 0.8 V for 1 second during this procedure.
8. If NG, go to EC-271, "Diagnosis Procedure".

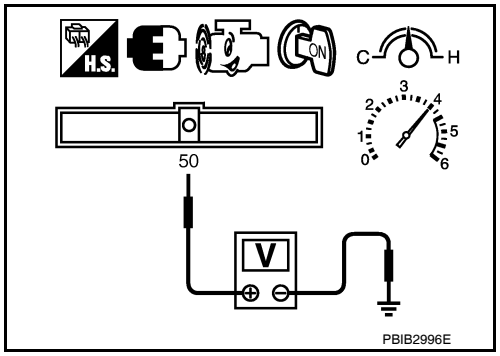

Wiring Diagram

INFOID:0000000005284749

EC-HO2S2-01

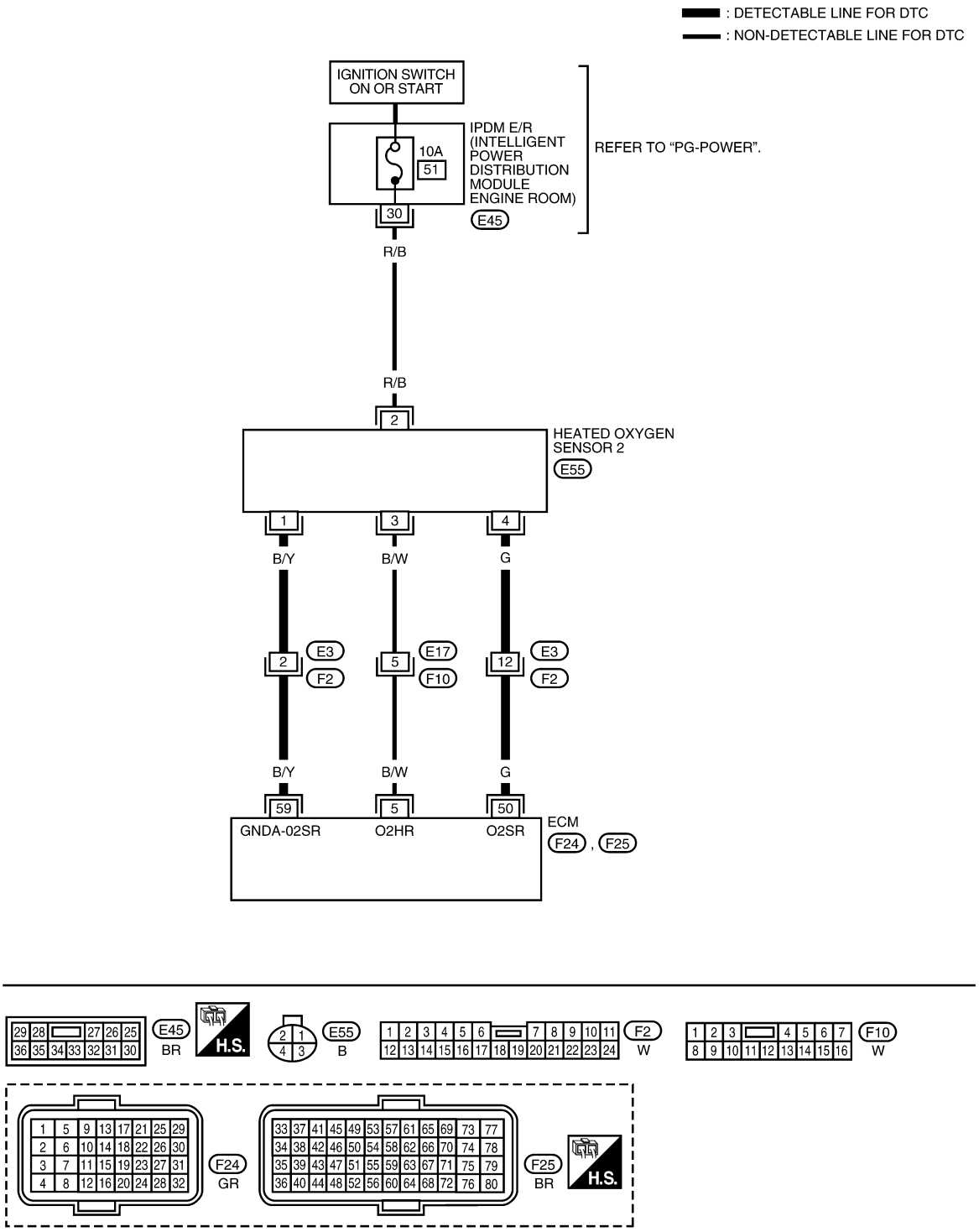

Specification data are reference values and are measured between each terminal and ground.
Pulse signal is measured by CONSULT-III.

CAUTION:

Do not use ECM ground terminals when measuring input/output voltage. Doing so may result in damage to the ECM's transistor. Use a ground other than ECM terminals, such as the ground.

TERMINAL NO.	WIRE COLOR	ITEM	CONDITION	DATA (DC Voltage)
5	B/W	Heated oxygen sensor 2 heater	**[Engine is running]** • Below 3,600 rpm after the following conditions are met. - Engine: After warming up - Keeping the engine speed between 3,500 and 4,000 rpm for 1 minute and at idle for 1 minute under no load	Approximately 10 V★ 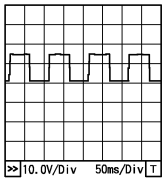 PBIA8148J
			[Ignition switch: ON] • Engine stopped **[Engine is running]** • Engine speed: Above 3,600 rpm	BATTERY VOLTAGE (11 - 14 V)
50	G	Heated oxygen sensor 2	**[Engine is running]** • Revving engine from idle to 3,000 rpm quickly after the following conditions are met. - Engine: After warming up - Keeping the engine speed between 3,500 and 4,000 rpm for 1 minute and at idle for 1 minute under no load.	0 - Approximately 1.0 V
59	B/Y	Sensor ground (Heated oxygen sensor 2)	**[Engine is running]** • **Warm-up condition** • Idle speed	Approximately 0 V

★: Average voltage for pulse signal (Actual pulse signal can be confirmed by oscilloscope.)

Diagnosis Procedure

INFOID:0000000005284750

1. CHECK GROUND CONNECTIONS

1. Turn ignition switch OFF.
2. Loosen and retighten ground screws on the body.
   Refer to EC-157, "Ground Inspection".

- ⇦: Vehicle front
- Body ground (1)

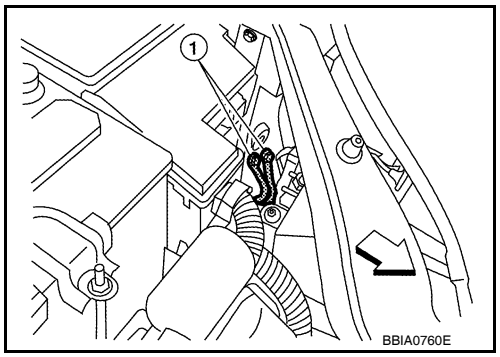

OK or NG

OK >> GO TO 2.
NG >> Repair or replace ground connections.

2. CLEAR THE SELF-LEARNING DATA

With CONSULT-III

1. Start engine and warm it up to normal operating temperature.
2. Select “SELF-LEARNING CONT” in “WORK SUPPORT” mode with CONSULT-III.
3. Clear the self-learning control coefficient by touching “CLEAR”.
4. Run engine for at least 10 minutes at idle speed.
   Is the 1st trip DTC P0171 or P0172 detected?
   Is it difficult to start engine?

Without CONSULT-III

1. Start engine and warm it up to normal operating temperature.
2. Turn ignition switch OFF.

3. Disconnect mass air flow sensor (1) harness connector, and restart and run engine for at least 5 seconds at idle speed.
4. Stop engine and reconnect mass air flow sensor harness connector.
5. Make sure that DTC P0102 is displayed.
6. Erase the DTC memory. Refer to EC-62, "Emission-related Diagnostic Information".
7. Make sure that DTC P0000 is displayed.
8. Run engine for at least 10 minutes at idle speed.
Is the 1st trip DTC P0171 or P0172 detected?
Is it difficult to start engine?

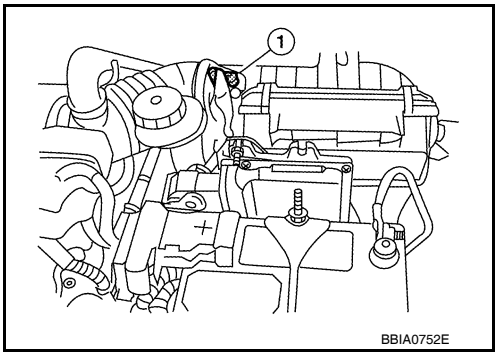

Yes or No

Yes >> Perform trouble diagnosis for DTC P0171 or P0172. Refer to EC-275 or EC-281.
No >> GO TO 3.

3. CHECK HO2S2 GROUND CIRCUIT FOR OPEN AND SHORT

1. Turn ignition switch OFF.
2. Disconnect heated oxygen sensor 2 harness connector (2).
- ⇦: Vehicle front
- Heated oxygen sensor 2 (1)
3. Disconnect ECM harness connector.
4. Check harness continuity between HO2S2 terminal 1 and ECM terminal 59. Refer to Wiring Diagram.

Continuity should exist.

5. Also check harness for short to ground and short to power.

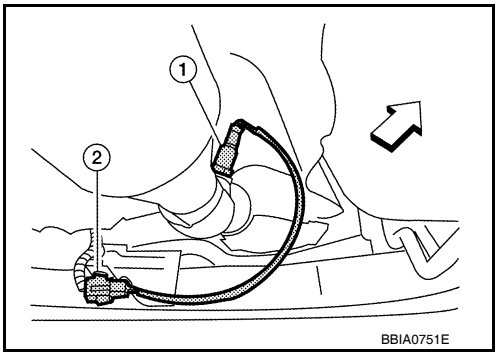

OK or NG

OK >> GO TO 5.
NG >> GO TO 4.

4. DETECT MALFUNCTIONING PART

Check the following.
- Harness connectors E3, F2
- Harness for open circuit or short between heated oxygen sensor 2 and ECM.

>> Repair open circuit or short to ground or short to power in harness or connectors.

5. CHECK HO2S2 INPUT SIGNAL CIRCUIT FOR OPEN AND SHORT

1. Check harness continuity between HO2S2 terminal 4 and ECM terminal 50. Refer to Wiring Diagram.

Continuity should exist.

2. Check harness continuity between ECM terminal 50 or HO2S2 terminal 4 and ground. Refer to Wiring Diagram.

Continuity should not exist.

3. Also check harness for short to power.

OK or NG

OK >> GO TO 7.
NG >> GO TO 6.

6. DETECT MALFUNCTIONING PART

Check the following.
- Harness connectors E3, F2
- Harness for open circuit or short between heated oxygen sensor 2 and ECM.

>> Repair open circuit or short to ground or short to power in harness or connectors.

7. CHECK HEATED OXYGEN SENSOR 2

Refer to EC-273, "Component Inspection".

OK or NG

OK >> GO TO 8.
NG >> Replace heated oxygen sensor 2.

8. CHECK INTERMITTENT INCIDENT

Refer to EC-152.

>> **INSPECTION END**

Component Inspection

INFOID:0000000005284751

HEATED OXYGEN SENSOR 2

WITH CONSULT-III

1. Start engine and warm it up to the normal operating temperature.
2. Turn ignition switch OFF and wait at least 10 seconds.
3. Start engine and keep the engine speed between 3,500 and 4,000 rpm for at least 1 minute under no load.
4. Let engine idle for 1 minute.
5. Select “FUEL INJECTION” in “ACTIVE TEST” mode, and select “HO2S2 (B1)” as the monitor item with CONSULT-III.
6. Check “HO2S2 (B1)” at idle speed when adjusting “FUEL INJECTION” to ±25%.

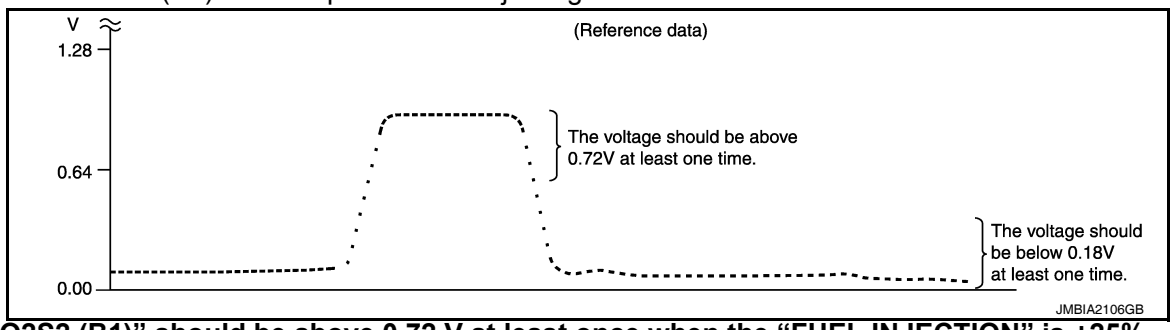

“HO2S2 (B1)” should be above 0.72 V at least once when the “FUEL INJECTION” is +25%.
“HO2S2 (B1)” should be below 0.18 V at least once when the “FUEL INJECTION” is –25%.

CAUTION:

- **Discard any heated oxygen sensor which has been dropped from a height of more than 0.5 m (19.7 in) onto a hard surface such as a concrete floor; use a new one.**
- **Before installing new oxygen sensor, clean exhaust system threads using Oxygen Sensor Thread Cleaner tool J-43897-18 or J-43897-12 and approved anti-seize lubricant.**

WITHOUT CONSULT-III

1. Start engine and warm it up to the normal operating temperature.
2. Turn ignition switch OFF and wait at least 10 seconds.
3. Start engine and keep the engine speed between 3,500 and 4,000 rpm for at least 1 minute under no load.
4. Let engine idle for 1 minute.
5. Set voltmeter probes between ECM terminal 50 (HO2S2 signal) and ground.

6. Check the voltage when revving up to 4,000 rpm under no load at least 10 times.
   (Depress and release accelerator pedal as soon as possible.)
   The voltage should be above 0.72 V and below 0.18 V at least once during this procedure.
   If the voltage can be confirmed at step 6, step 7 is not necessary.
7. Keep vehicle idling for 10 minutes, then check voltage. Or check the voltage when coasting from 80 km/h (50 MPH) in D position (CVT) or 3rd gear position (M/T).
   The voltage should be above 0.72 V and below 0.18 V at least once during this procedure.

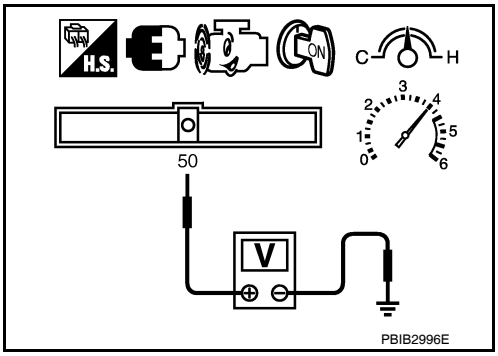

8. If NG, replace heated oxygen sensor 2.
   CAUTION:
   - **Discard any heated oxygen sensor which has been dropped from a height of more than 0.5 m (19.7 in) onto a hard surface such as a concrete floor; use a new one.**
   - **Before installing new oxygen sensor, clean exhaust system threads using Oxygen Sensor Thread Cleaner tool J-43897-18 or J-43897-12 and approved anti-seize lubricant.**

Removal and Installation

INFOID:0000000005284752

HEATED OXYGEN SENSOR 2

Refer to EM-23

DTC P0171 FUEL INJECTION SYSTEM FUNCTION

On Board Diagnosis Logic

INFOID:0000000005284753

With the Air/Fuel Mixture Ratio Self-Learning Control, the actual mixture ratio can be brought closely to the theoretical mixture ratio based on the mixture ratio feedback signal from the air fuel ratio (A/F) sensor 1. The ECM calculates the necessary compensation to correct the offset between the actual and the theoretical ratios. In case the amount of the compensation value is extremely large (The actual mixture ratio is too lean.), the ECM judges the condition as the fuel injection system malfunction and lights up the MIL (2 trip detection logic).

Sensor	Input Signal to ECM	ECM function	Actuator
Air fuel ratio (A/F) sensor 1	Density of oxygen in exhaust gas (Mixture ratio feedback signal)	Fuel injection control	Fuel injector

DTC No.	Trouble diagnosis name	DTC detecting condition	Possible cause
P0171 0171	Fuel injection system too lean	• Fuel injection system does not operate properly. • The amount of mixture ratio compensation is too large. (The mixture ratio is too lean.)	• Intake air leaks • Air fuel ratio (A/F) sensor 1 • Fuel injector • Exhaust gas leaks • Incorrect fuel pressure • Lack of fuel • Mass air flow sensor • Incorrect PCV hose connection

DTC Confirmation Procedure

INFOID:0000000005284754

NOTE:
If DTC Confirmation Procedure has been previously conducted, always turn ignition switch OFF and wait at least 10 seconds before conducting the next test.

WITH CONSULT-III

1. Start engine and warm it up to normal operating temperature.
2. Turn ignition switch OFF and wait at least 10 seconds.
3. Turn ignition switch ON and select “SELF-LEARNING CONT” in “WORK SUPPORT” mode with CONSULT-III.
4. Clear the self-learning control coefficient by touching “CLEAR”.
5. Start engine.
   If it is difficult to start engine, the fuel injection system has a malfunction.
   Perform the following procedure is advised.

a. Crank engine while depressing accelerator pedal.
   NOTE:
   When depressing accelerator pedal three-fourths (3/4) or more, the control system does not start the engine. Do not depress accelerator pedal too much.

b. If engine starts, go to EC-278, "Diagnosis Procedure".
   If engine does not start, check exhaust and intake air leak visually.

6. Keep engine at idle for at least 5 minutes.
7. Check 1st trip DTC.
   The 1st trip DTC P0171 should be detected at this stage, if a malfunction exists. If so, go to EC-278, "Diagnosis Procedure".
   NOTE:
   If 1st trip DTC is not detected during above procedure, performing the following procedure is advised.

a. Turn ignition switch OFF and wait at least 10 seconds.
b. Start engine.
c. Maintain the following conditions for at least 10 consecutive minutes.
   Hold the accelerator pedal as steady as possible.

VHCL SPEED SE	50 – 120 km/h (31 – 75 MPH)

CAUTION:
Always drive vehicle at a safe speed.

d. Check 1st trip DTC.
e. If 1st trip DTC is detected, go to EC-278, "Diagnosis Procedure".

WITH GST

1. Start engine and warm it up to normal operating temperature.
2. Turn ignition switch OFF and wait at least 10 seconds.
3. Disconnect mass air flow sensor (1) harness connector.
4. Restart engine and let idle for at least 5 seconds.
5. Stop engine and reconnect mass air flow sensor harness connector.
6. Select Service $03 with GST. Make sure DTC P0102 is detected.
7. Select Service $04 with GST and erase the DTC P0102.
8. Start engine.
   If it is difficult to start engine, the fuel injection system has a malfunction.
   Perform the following procedure is advised.

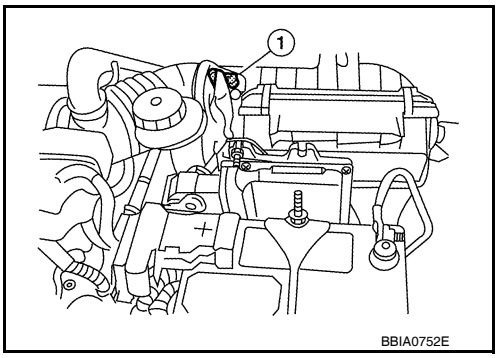

a. Crank engine while depressing accelerator pedal.
   NOTE:
   When depressing accelerator pedal three-fourths (3/4) or more, the control system does not start the engine. Do not depress accelerator pedal too much.
b. If engine starts, go to EC-278, "Diagnosis Procedure".
   If engine does not start, check exhaust and intake air leak visually.
9. Keep engine at idle for at least 5 minutes.
10. Check 1st trip DTC.
    The 1st trip DTC P0171 should be detected at this stage, if a malfunction exists. If so, go to EC-278, "Diagnosis Procedure".
    NOTE:
    If 1st trip DTC is not detected during above procedure, performing the following procedure is advised.

a. Turn ignition switch OFF and wait at least 10 seconds.
b. Start engine.
c. Maintain the following conditions for at least 10 consecutive minutes.
   Hold the accelerator pedal as steady as possible.

VHCL SPEED SE	50 – 120 km/h (31 – 75 MPH)

CAUTION:
Always drive vehicle at a safe speed.

d. Check 1st trip DTC.
e. If 1st trip DTC is detected, go to EC-278, "Diagnosis Procedure".

Wiring Diagram

INFOID:0000000005284755

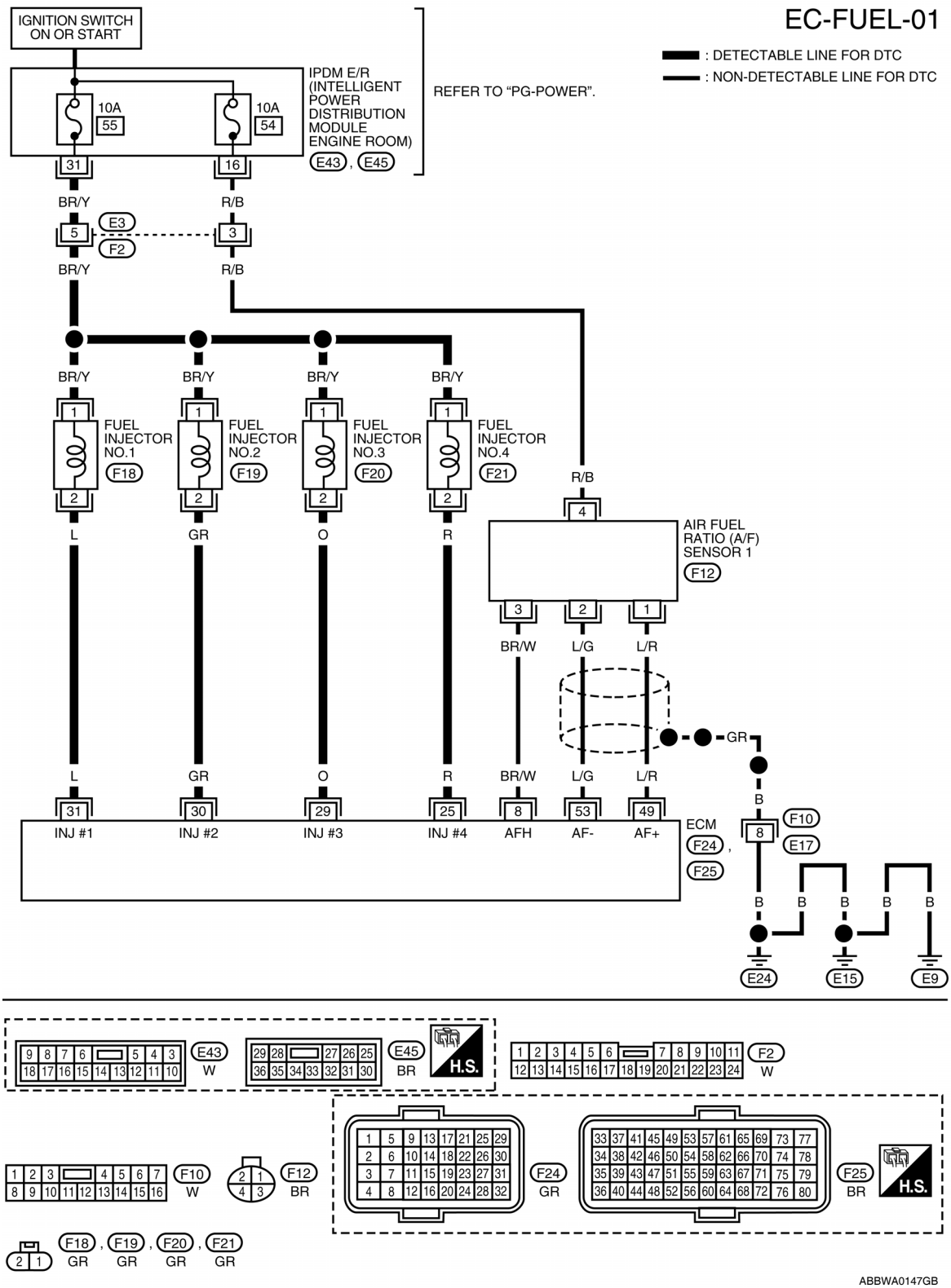

Specification data are reference values and are measured between each terminal and ground.
Pulse signal is measured by CONSULT-III.

CAUTION:

Do not use ECM ground terminals when measuring input/output voltage. Doing so may result in damage to the ECM's transistor. Use a ground other than ECM terminals, such as the ground.

TERMINAL NO.	WIRE COLOR	ITEM	CONDITION	DATA (DC Voltage)
8	BR/W	A/F sensor 1 heater	**[Engine is running]** • **Warm-up condition** • Idle speed (More than 140 seconds after starting engine)	Approximately 2.9 - 8.8 V★ 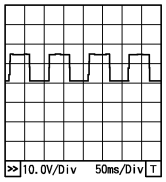 PBIA8148J
25 29 30 31	R O GR L	Fuel injector No. 4 Fuel injector No. 3 Fuel injector No. 2 Fuel injector No. 1	**[Engine is running]** • **Warm-up condition** • Idle speed **NOTE:** The pulse cycle changes depending on rpm at idle	BATTERY VOLTAGE (11 - 14 V)★ 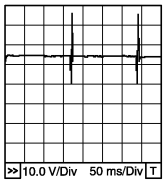 PBIB0529E
			[Engine is running] • **Warm-up condition** • Engine speed: 2,000 rpm	BATTERY VOLTAGE (11 - 14 V)★ 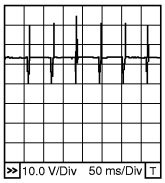 PBIA4943J
49	L/R	A/F sensor 1	**[Engine is running]** • **Warm-up condition** • Engine speed: 2,000 rpm	Approximately 1.8 V Output voltage varies with air fuel ratio.
53	L/G	A/F sensor 1	**[Ignition switch: ON]**	Approximately 2.2 V

★: Average voltage for pulse signal (Actual pulse signal can be confirmed by oscilloscope.)

Diagnosis Procedure

INFOID:0000000005284756

1. CHECK EXHAUST GAS LEAK

1. Start engine and run it at idle.
2. Listen for an exhaust gas leak before three way catalyst (manifold).

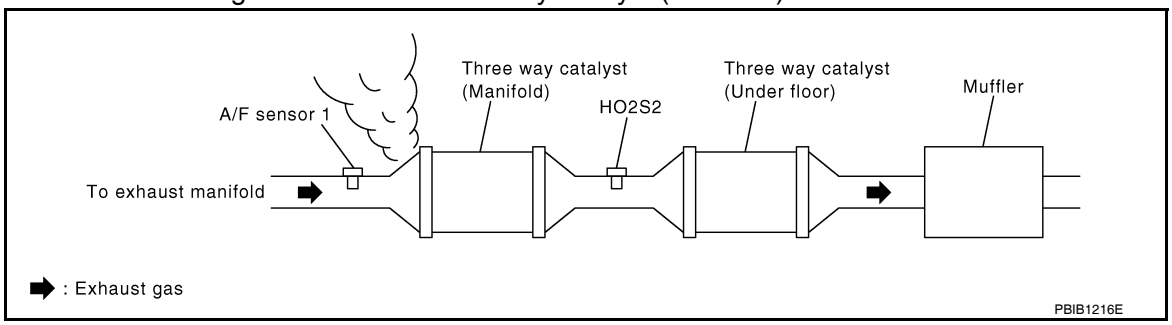

OK or NG

OK >> GO TO 2.
NG >> Repair or replace.

2. CHECK FOR INTAKE AIR LEAK AND PCV HOSE

1. Listen for an intake air leak after the mass air flow sensor.
2. Check PCV hose connection.

OK or NG

OK >> GO TO 3.
NG >> Repair or replace.

3. CHECK AIR FUEL RATIO (A/F) SENSOR 1 CIRCUIT FOR OPEN AND SHORT

1. Turn ignition switch OFF.
2. Disconnect air fuel ratio (A/F) sensor 1 harness connector (1).
- Air fuel ratio (A/F) sensor 1 (2)
3. Disconnect ECM harness connector.
4. Check harness continuity between the following terminals. Refer to Wiring Diagram.

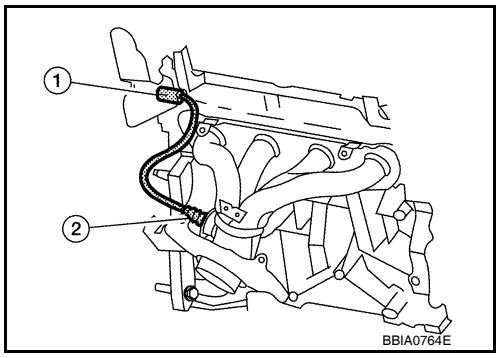

A/F sensor 1 terminal	ECM terminal
1	49
2	53

Continuity should exist.

5. Check harness continuity between ECM terminals 49, 53 or A/F sensor 1 terminals 1, 2 and ground. Refer to Wiring Diagram.

Continuity should not exist.

6. Also check harness for short to power.

OK or NG

OK >> GO TO 4.
NG >> Repair open circuit or short to ground or short to power in harness or connectors.

4. CHECK FUEL PRESSURE

1. Release fuel pressure to zero. Refer to EC-101, "Fuel Pressure Check".
2. Install fuel pressure gauge and check fuel pressure. Refer to EC-101, "Fuel Pressure Check".

At idling: Approximately 350 kPa (3.57 kg/cm^2, 51 psi)

OK or NG

OK >> GO TO 6.
NG >> GO TO 5.

5. DETECT MALFUNCTIONING PART

Check the following.
- Fuel pump and circuit (Refer to EC-556.)
- Fuel pressure regulator (Refer to EC-101, "Fuel Pressure Check".)
- Fuel lines (Refer to EM-36.)
- Fuel filter for clogging

>> Repair or replace.

6. CHECK MASS AIR FLOW SENSOR

With CONSULT-III

1. Install all removed parts.
2. Start engine and warm it up to normal operating temperature.
3. Check “MASS AIR FLOW” in “DATA MONITOR” mode with CONSULT-III.

At idling : 1.0 - 4.0 g·m/sec
At 2,500 rpm : 2.0 - 10.0 g·m/sec

With GST

1. Install all removed parts.
2. Start engine and warm it up to normal operating temperature.
3. Check mass air flow sensor signal in Service $01 with GST.

At idling : 1.0 - 4.0 g·m/sec
At 2,500 rpm : 2.0 - 10.0 g·m/sec

OK or NG

OK >> GO TO 7.
NG >> Check connectors for rusted terminals or loose connections in the mass air flow sensor circuit or ground. Refer to EC-185.

7. CHECK FUNCTION OF FUEL INJECTORS

With CONSULT-III

1. Let engine idle.
2. Perform “POWER BALANCE” in “ACTIVE TEST” mode with CONSULT-III.
3. Make sure that each circuit produces a momentary engine speed drop.

Without CONSULT-III

1. Let engine idle.
2. Listen to each fuel injector operating sound.

Clicking noise should be heard.

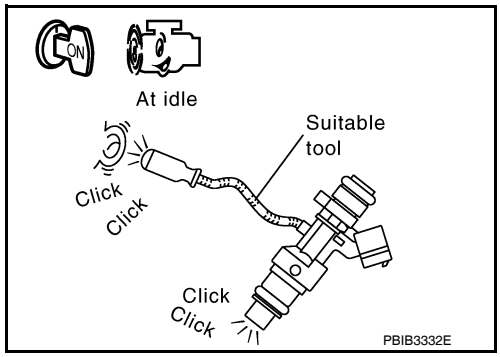

OK or NG

OK >> GO TO 8.
NG >> Perform trouble diagnosis for EC-551.

8. CHECK FUEL INJECTOR

1. Confirm that the engine is cooled down and there are no fire hazards near the vehicle.
2. Turn ignition switch OFF.
3. Reconnect all harness connectors disconnected.
4. Remove fuel tube assembly. Refer to EM-36.
   Keep fuel hose and all fuel injectors connected to fuel tube.
   The fuel injector harness connectors should remain connected.
5. Disconnect all ignition coil harness connectors.
6. Prepare pans or saucers under each fuel injector.
7. Crank engine for about 3 seconds. Make sure that fuel sprays out from fuel injectors.

Fuel should be sprayed evenly for each fuel injector.

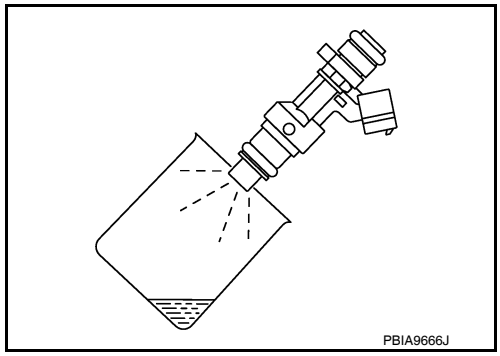

OK or NG

OK >> GO TO 9.
NG >> Replace fuel injectors from which fuel does not spray out. Always replace O-ring with new ones.

9. CHECK INTERMITTENT INCIDENT

Refer to EC-152.

>> **INSPECTION END**

DTC P0172 FUEL INJECTION SYSTEM FUNCTION

On Board Diagnosis Logic

INFOID:0000000005284757

With the Air/Fuel Mixture Ratio Self-Learning Control, the actual mixture ratio can be brought closely to the theoretical mixture ratio based on the mixture ratio feedback signal from the air fuel ratio (A/F) sensor 1. The ECM calculates the necessary compensation to correct the offset between the actual and the theoretical ratios. In case the amount of the compensation value is extremely large (The actual mixture ratio is too rich.), the ECM judges the condition as the fuel injection system malfunction and lights up the MIL (2 trip detection logic).

Sensor	Input Signal to ECM	ECM function	Actuator
Air fuel ratio (A/F) sensor 1	Density of oxygen in exhaust gas (Mixture ratio feedback signal)	Fuel injection control	Fuel injector

DTC No.	Trouble diagnosis name	DTC detecting condition	Possible cause
P0172 0172	Fuel injection system too rich	• Fuel injection system does not operate properly. • The amount of mixture ratio compensation is too large. (The mixture ratio is too rich.)	• Air fuel ratio (A/F) sensor 1 • Fuel injector • Exhaust gas leaks • Incorrect fuel pressure • Mass air flow sensor

DTC Confirmation Procedure

INFOID:0000000005284758

NOTE:
If DTC Confirmation Procedure has been previously conducted, always turn ignition switch OFF and wait at least 10 seconds before conducting the next test.

WITH CONSULT-III

1. Start engine and warm it up to normal operating temperature.
2. Turn ignition switch OFF and wait at least 10 seconds.
3. Turn ignition switch ON and select “SELF-LEARNING CONT” in “WORK SUPPORT” mode with CONSULT-III.
4. Clear the self-learning control coefficient by touching “CLEAR”.
5. Start engine.
   If it is difficult to start engine, the fuel injection system has a malfunction.
   Perform the following procedure is advised.

a. Crank engine while depressing accelerator pedal.
   NOTE:
   When depressing accelerator pedal three-fourths (3/4) or more, the control system does not start the engine. Do not depress accelerator pedal too much.

b. If engine starts, go to EC-284, "Diagnosis Procedure".
   If engine does not start, remove ignition plugs and check for fouling, etc.

6. Keep engine at idle for at least 5 minutes.
7. Check 1st trip DTC.
   The 1st trip DTC P0172 should be detected at this stage, if a malfunction exists. If so, go to EC-284, "Diagnosis Procedure".
   NOTE:
   If 1st trip DTC is not detected during above procedure, performing the following procedure is advised.

a. Turn ignition switch OFF and wait at least 10 seconds.
b. Start engine.
c. Maintain the following conditions for at least 10 consecutive minutes.
   Hold the accelerator pedal as steady as possible.

VHCL SPEED SE	50 – 120 km/h (31 – 75 MPH)

CAUTION:
Always drive vehicle at a safe speed.

d. Check 1st trip DTC.

e. If 1st trip DTC is detected, go to EC-284, "Diagnosis Procedure".

WITH GST

1. Start engine and warm it up to normal operating temperature.
2. Turn ignition switch OFF and wait at least 10 seconds.
3. Disconnect mass air flow sensor (1) harness connector.
4. Restart engine and let idle for at least 5 seconds.
5. Stop engine and reconnect mass air flow sensor harness connector.
6. Select Service $03 with GST. Make sure DTC P0102 is detected.
7. Select Service $04 with GST and erase the DTC P0102.
8. Start engine.
   If it is difficult to start engine, the fuel injection system has a malfunction.
   Perform the following procedure is advised.

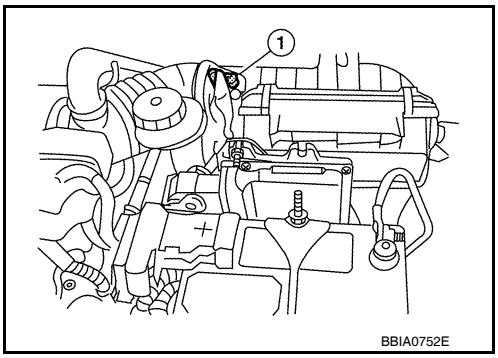

a. Crank engine while depressing accelerator pedal.
   NOTE:
   When depressing accelerator pedal three-fourths (3/4) or more, the control system does not start the engine. Do not depress accelerator pedal too much.

b. If engine starts, go to EC-284, "Diagnosis Procedure".
   If engine does not start, remove ignition plugs and check for fouling, etc.

9. Keep engine at idle for at least 5 minutes.
10. Check 1st trip DTC.
    The 1st trip DTC P0172 should be detected at this stage, if a malfunction exists. If so, go to EC-284, "Diagnosis Procedure".
    NOTE:
    If 1st trip DTC is not detected during above procedure, performing the following procedure is advised.

a. Turn ignition switch OFF and wait at least 10 seconds.

b. Start engine.

c. Maintain the following conditions for at least 10 consecutive minutes.
   Hold the accelerator pedal as steady as possible.

VHCL SPEED SE	50 – 120 km/h (31 – 75 MPH)

CAUTION:
Always drive vehicle at a safe speed.

d. Check 1st trip DTC.

e. If 1st trip DTC is detected, go to EC-284, "Diagnosis Procedure".

Wiring Diagram

INFOID:0000000005284759

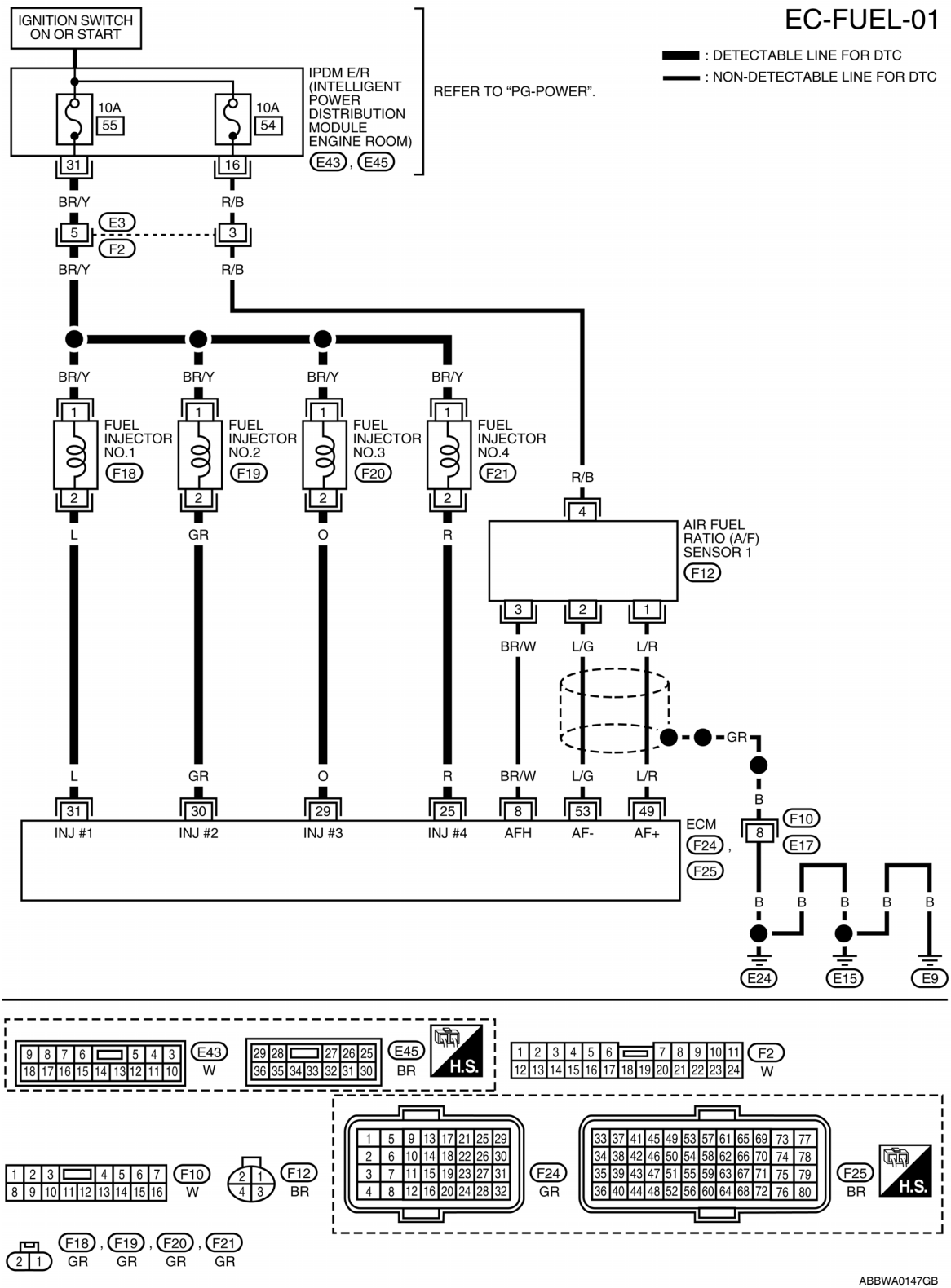

Specification data are reference values and are measured between each terminal and ground.
Pulse signal is measured by CONSULT-III.

CAUTION:

Do not use ECM ground terminals when measuring input/output voltage. Doing so may result in damage to the ECM's transistor. Use a ground other than ECM terminals, such as the ground.

TERMINAL NO.	WIRE COLOR	ITEM	CONDITION	DATA (DC Voltage)
8	BR/W	A/F sensor 1 heater	**[Engine is running]** • **Warm-up condition** • Idle speed (More than 140 seconds after starting engine)	Approximately 2.9 - 8.8 V★ 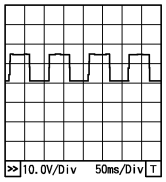 PBIA8148J
25 29 30 31	R O GR L	Fuel injector No. 4 Fuel injector No. 3 Fuel injector No. 2 Fuel injector No. 1	**[Engine is running]** • **Warm-up condition** • Idle speed **NOTE:** The pulse cycle changes depending on rpm at idle	BATTERY VOLTAGE (11 - 14 V)★ 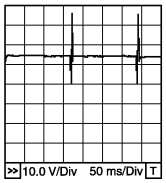 PBIB0529E
			[Engine is running] • **Warm-up condition** • Engine speed: 2,000 rpm	BATTERY VOLTAGE (11 - 14 V)★ 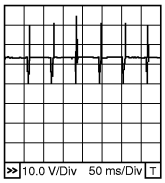 PBIA4943J
49	L/R	A/F sensor 1	**[Engine is running]** • **Warm-up condition** • Engine speed: 2,000 rpm	Approximately 1.8 V Output voltage varies with air fuel ratio.
53	L/G	A/F sensor 1	**[Ignition switch: ON]**	Approximately 2.2 V

★: Average voltage for pulse signal (Actual pulse signal can be confirmed by oscilloscope.)

Diagnosis Procedure

INFOID:0000000005284760

1. CHECK EXHAUST GAS LEAK

1. Start engine and run it at idle.
2. Listen for an exhaust gas leak before three way catalyst (manifold).

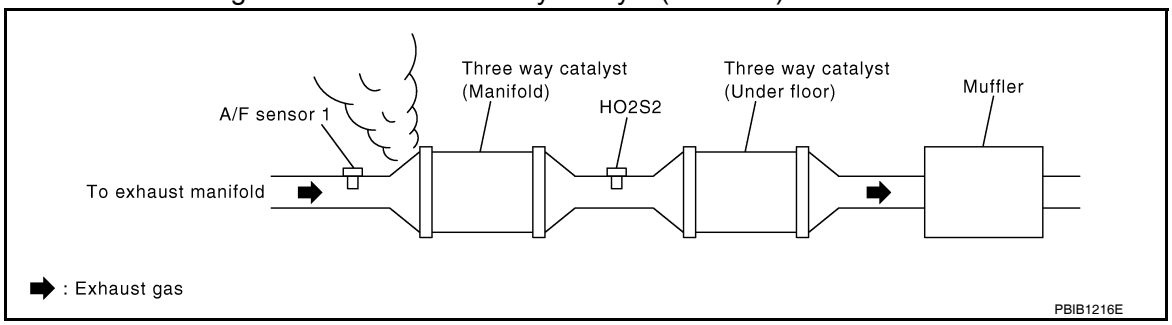

OK or NG

OK >> GO TO 2.
NG >> Repair or replace.

2. CHECK FOR INTAKE AIR LEAK

Listen for an intake air leak after the mass air flow sensor.

OK or NG

OK >> GO TO 3.
NG >> Repair or replace.

3. CHECK AIR FUEL RATIO (A/F) SENSOR 1 CIRCUIT FOR OPEN AND SHORT

1. Turn ignition switch OFF.
2. Disconnect air fuel ratio (A/F) sensor 1 harness connector (1).
- Air fuel ratio (A/F) sensor 1 (2)
3. Disconnect ECM harness connector.
4. Check harness continuity between the following terminals. Refer to Wiring Diagram.

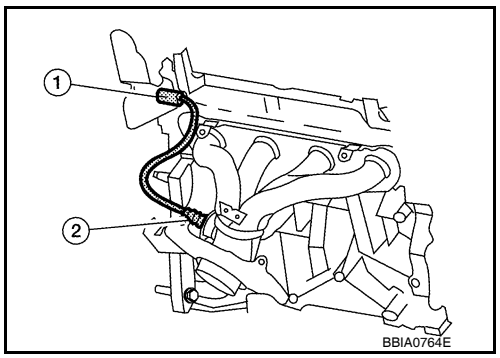

A/F sensor 1 terminal	ECM terminal
1	49
2	53

Continuity should exist.

5. Check harness continuity between ECM terminals 49, 53 or A/F sensor 1 terminals 1, 2 and ground. Refer to Wiring Diagram.

Continuity should not exist.

6. Also check harness for short to power.

OK or NG

OK >> GO TO 4.
NG >> Repair open circuit or short to ground or short to power in harness or connectors.

4. CHECK FUEL PRESSURE

1. Release fuel pressure to zero. Refer to EC-101, "Fuel Pressure Check".
2. Install fuel pressure gauge and check fuel pressure. Refer to EC-101, "Fuel Pressure Check".

At idling: Approximately 350 kPa (3.57 kg/cm2, 51 psi)

OK or NG

OK >> GO TO 6.
NG >> GO TO 5.

5. DETECT MALFUNCTIONING PART

Check the following.
- Fuel pump and circuit (Refer to EC-556.)
- Fuel pressure regulator (Refer to EC-101, "Fuel Pressure Check".)

>> Repair or replace.

6. CHECK MASS AIR FLOW SENSOR

With CONSULT-III
1. Install all removed parts.
2. Start engine and warm it up to normal operating temperature.
3. Check “MASS AIR FLOW” in “DATA MONITOR” mode with CONSULT-III.

At idling : 1.0 - 4.0 g·m/sec
At 2,500 rpm : 2.0 - 10.0 g·m/sec

With GST
1. Install all removed parts.
2. Start engine and warm it up to normal operating temperature.
3. Check mass air flow sensor signal in Service $01 with GST.

At idling : 1.0 - 4.0 g·m/sec
At 2,500 rpm : 2.0 - 10.0 g·m/sec

OK or NG

OK >> GO TO 7.
NG >> Check connectors for rusted terminals or loose connections in the mass air flow sensor circuit or ground. Refer to EC-185.

7. CHECK FUNCTION OF FUEL INJECTORS

With CONSULT-III

1. Let engine idle.
2. Perform “POWER BALANCE” in “ACTIVE TEST” mode with CONSULT-III.
3. Make sure that each circuit produces a momentary engine speed drop.

Without CONSULT-III

1. Let engine idle.
2. Listen to each fuel injector operating sound.

Clicking noise should be heard.

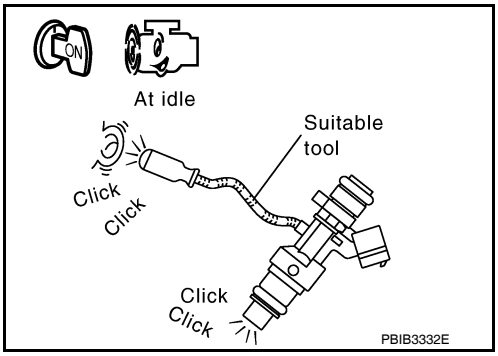

OK or NG

OK >> GO TO 8.
NG >> Perform trouble diagnosis for EC-551.

8. CHECK FUEL INJECTOR

1. Remove fuel injector assembly. Refer to EM-36.
   Keep fuel hose and all fuel injectors connected to fuel tube.
2. Confirm that the engine is cooled down and there are no fire hazards near the vehicle.
3. Reconnect all harness connectors disconnected.
4. Disconnect all ignition coil harness connectors.
5. Prepare pans or saucers under each fuel injectors.
6. Crank engine for about 3 seconds.
   Make sure fuel does not drip from fuel injector.

OK or NG

OK (Does not drip.)>>GO TO 9.
NG (Drips.)>>Replace the fuel injectors from which fuel is dripping. Always replace O-ring with new one.

9. CHECK INTERMITTENT INCIDENT

Refer to EC-152.

>> **INSPECTION END**

DTC P0181 FTT SENSOR

Component Description

INFOID:0000000005284761

The fuel tank temperature sensor (4) is used to detect the fuel temperature inside the fuel tank. The sensor modifies a voltage signal from the ECM. The modified signal returns to the ECM as the fuel temperature input. The sensor uses a thermistor which is sensitive to the change in temperature. The electrical resistance of the thermistor decreases as temperature increases.

- Fuel level sensor unit and fuel pump (1)
- Fuel pressure regulator (2)
- Fuel level sensor (3)

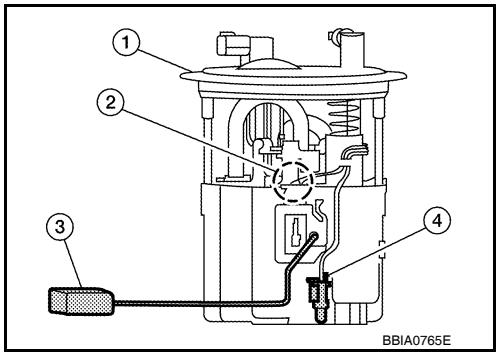

<Reference data>

Fluid temperature [°C (°F)]	Voltage* (V)	Resistance (kΩ)
20 (68)	3.5	2.3 - 2.7
50 (122)	2.2	0.79 - 0.90

*: This data is reference values and is measured between ECM terminal 43 (Fuel tank temperature sensor) and ground.

CAUTION:

Do not use ECM ground terminals when measuring input/output voltage. Doing so may result damage the ECM's transistor. Use ground other than ECM, such as ground.

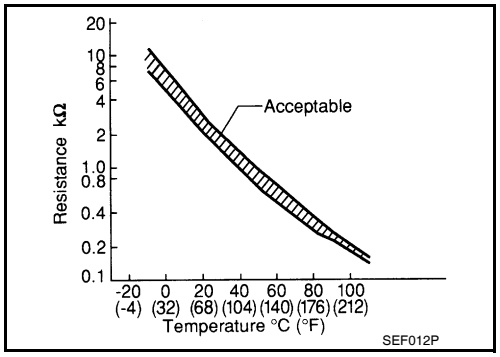

On Board Diagnosis Logic

INFOID:0000000005284762

DTC No.	Trouble diagnosis name	DTC detecting condition	Possible cause
P0181 0181	Fuel tank temperature sensor circuit range/performance	Rationally incorrect voltage from the sensor is sent to ECM, compared with the voltage signals from engine coolant temperature sensor and intake air temperature sensor.	• Harness or connectors (Fuel tank temperature sensor circuit is open or shorted) • Fuel tank temperature sensor

DTC Confirmation Procedure

INFOID:0000000005284763

NOTE:

If DTC Confirmation Procedure has been previously conducted, always turn ignition switch OFF and wait at least 10 seconds before conducting the next test.

WITH CONSULT-III

1. Turn ignition switch ON wait at least 10 seconds.
2. Check 1st trip DTC.
   If 1st trip DTC is detected, go to EC-288, "Diagnosis Procedure".
   If 1st trip DTC is not detected, go to following step.
3. Select “DATA MONITOR” mode with CONSULT-III.
4. Check “COOLAN TEMP/S” value.
   If the “COOLAN TEMP/S” is less than 60°C (140°F), the result will be OK.
   If the “COOLAN TEMP/S” is above 60°C (140°F), go to the following step.
5. Cool engine down until “COOLAN TEMP/S” signal is less than 60°C (140°F).
6. Wait at least 10 seconds.
7. Check 1st trip DTC.
8. If 1st trip DTC is detected, go to EC-288, "Diagnosis Procedure".

WITH GST

Follow the procedure “WITH CONSULT-III” above.

Wiring Diagram

INFOID:0000000005284764

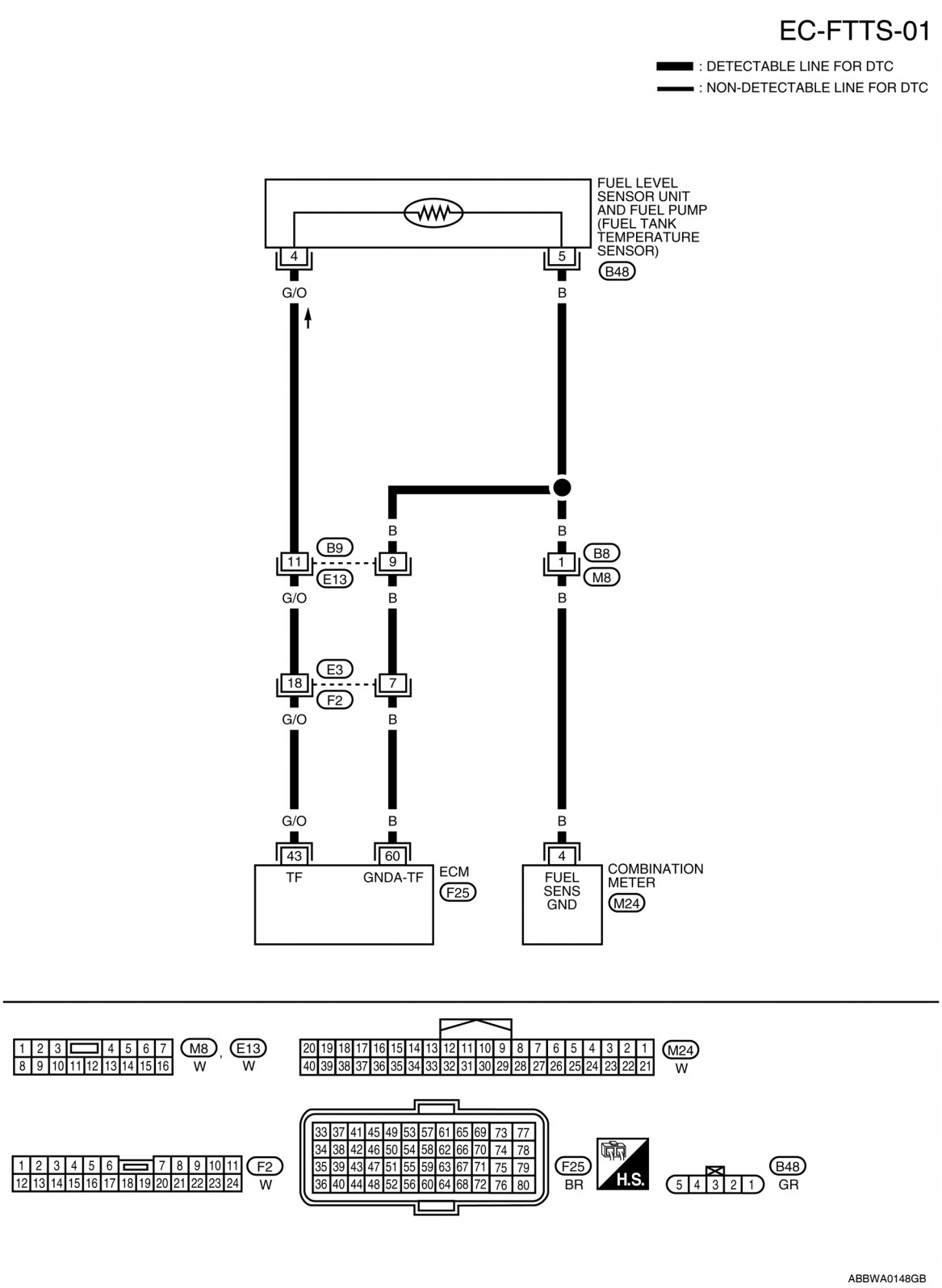

Diagnosis Procedure

INFOID:0000000005284765

1. CHECK GROUND CONNECTIONS

1. Turn ignition switch OFF.

2. Loosen and retighten ground screws on the body.
   Refer to EC-157, "Ground Inspection".
- ⇦ : Vehicle front
- Body ground (1)

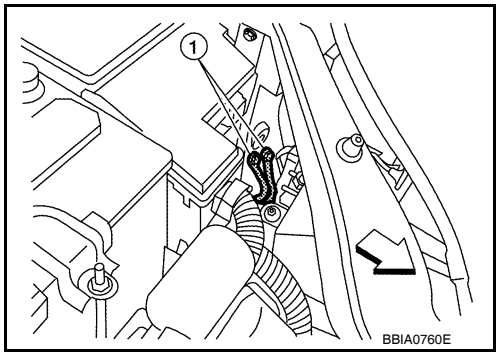

OK or NG

OK >> GO TO 2.
NG >> Repair or replace ground connections.

2. CHECK FUEL TANK TEMPERATURE SENSOR POWER SUPPLY CIRCUIT

1. Turn ignition switch OFF.
2. Disconnect “fuel level sensor unit and fuel pump” harness connector (1).
- ⇦ : Vehicle front
3. Turn ignition switch ON.

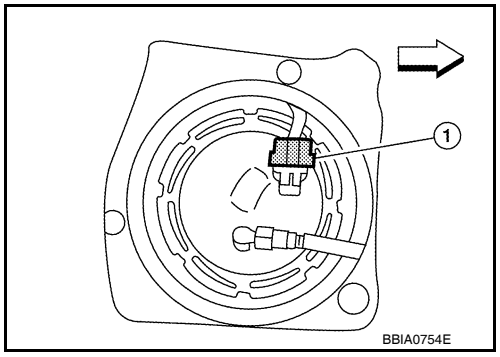

4. Check voltage between “fuel level sensor unit and fuel pump” terminal 4 and ground with CONSULT-III or tester.

Voltage: Approximately 5 V

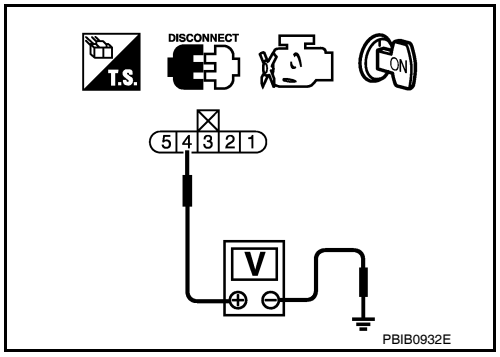

OK or NG

OK >> GO TO 4.
NG >> GO TO 3.

3. DETECT MALFUNCTIONING PART

Check the following.
- Harness connectors B9, E13
- Harness connectors E3, F2
- Harness for open or short between ECM and “fuel level sensor unit and fuel pump”

>> Repair open circuit or short to ground or short to power in harness or connector.

4. CHECK FUEL TANK TEMPERATURE SENSOR GROUND CIRCUIT FOR OPEN AND SHORT

1. Turn ignition switch OFF.
2. Disconnect combination meter harness connector.
3. Check harness continuity between “fuel level sensor unit and fuel pump” terminal 5 and combination meter terminal 4, ECM terminal 60. Refer to Wiring Diagram.

Continuity should exist.

4. Also check harness for short to ground and short to power.

OK or NG

OK >> GO TO 6.
NG >> GO TO 5.

5. DETECT MALFUNCTIONING PART

Check the following.
- Harness connectors B8, M8
- Harness connectors B9, E13
- Harness connectors E3, F2
- Harness for open or short between “fuel level sensor unit and fuel pump” and combination meter.
- Harness for open or short between “fuel level sensor unit and fuel pump” and ECM.

>> Repair open circuit or short to ground or short to power in harness or connectors.

6. CHECK FUEL TANK TEMPERATURE SENSOR

Refer to, EC-290, "Component Inspection".

OK or NG

OK >> GO TO 7.
NG >> Replace “fuel level sensor unit and fuel pump”.

7. CHECK INTERMITTENT INCIDENT

Perform EC-152.

>> **INSPECTION END**

Component Inspection

INFOID:0000000005284766

FUEL TANK TEMPERATURE SENSOR

1. Check resistance between “fuel level sensor unit and fuel pump” terminal 4 and 5 by heating with hot water as shown in the figure.

Temperature [°C (°F)]	Resistance (kΩ)
20 (68)	2.3 - 2.7
50 (122)	0.79 - 0.90

2. If NG, replace “fuel level sensor unit and fuel pump”.

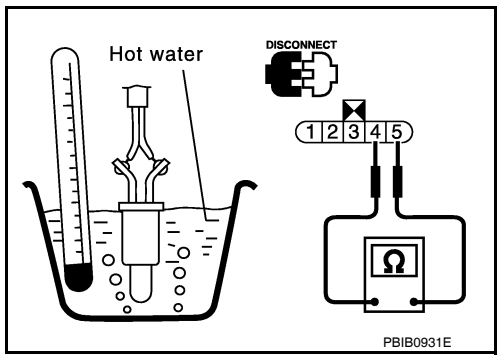

Removal and Installation

INFOID:0000000005284767

FUEL TANK TEMPERATURE SENSOR

Refer to FL-6.

DTC P0182, P0183 FTT SENSOR

Component Description

INFOID:0000000005284768

The fuel tank temperature sensor (4) is used to detect the fuel temperature inside the fuel tank. The sensor modifies a voltage signal from the ECM. The modified signal returns to the ECM as the fuel temperature input. The sensor uses a thermistor which is sensitive to the change in temperature. The electrical resistance of the thermistor decreases as temperature increases.

- Fuel level sensor unit and fuel pump (1)
- Fuel pressure regulator (2)
- Fuel level sensor (3)

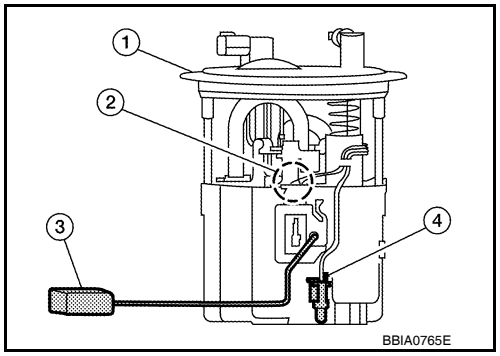

<Reference data>

Fluid temperature [°C (°F)]	Voltage* (V)	Resistance (kΩ)
20 (68)	3.5	2.3 - 2.7
50 (122)	2.2	0.79 - 0.90

*: This data is reference values and is measured between ECM terminal 43 (Fuel tank temperature sensor) and ground.

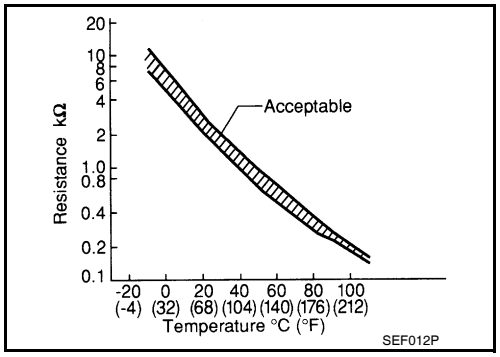

CAUTION:

Do not use ECM ground terminals when measuring input/output voltage. Doing so may result damage the ECM's transistor. Use ground other than ECM, such as ground.

On Board Diagnosis Logic

INFOID:0000000005284769

DTC No.	Trouble diagnosis name	DTC detecting condition	Possible cause
P0182 0182	Fuel tank temperature sensor circuit low input	An excessively low voltage from the sensor is sent to ECM.	• Harness or connectors (Fuel tank temperature sensor circuit is open or shorted.) • Fuel tank temperature sensor
P0183 0183	Fuel tank temperature sensor circuit high input	An excessively high voltage from the sensor is sent to ECM.	

DTC Confirmation Procedure

INFOID:0000000005284770

NOTE:

If DTC Confirmation Procedure has been previously conducted, always turn ignition switch OFF and wait at least 10 seconds before conducting the next test.

1. Turn ignition switch ON and wait at least 5 seconds.
2. Check 1st trip DTC.
3. If 1st trip DTC is detected, go to EC-292, "Diagnosis Procedure".

Wiring Diagram

INFOID:0000000005284771

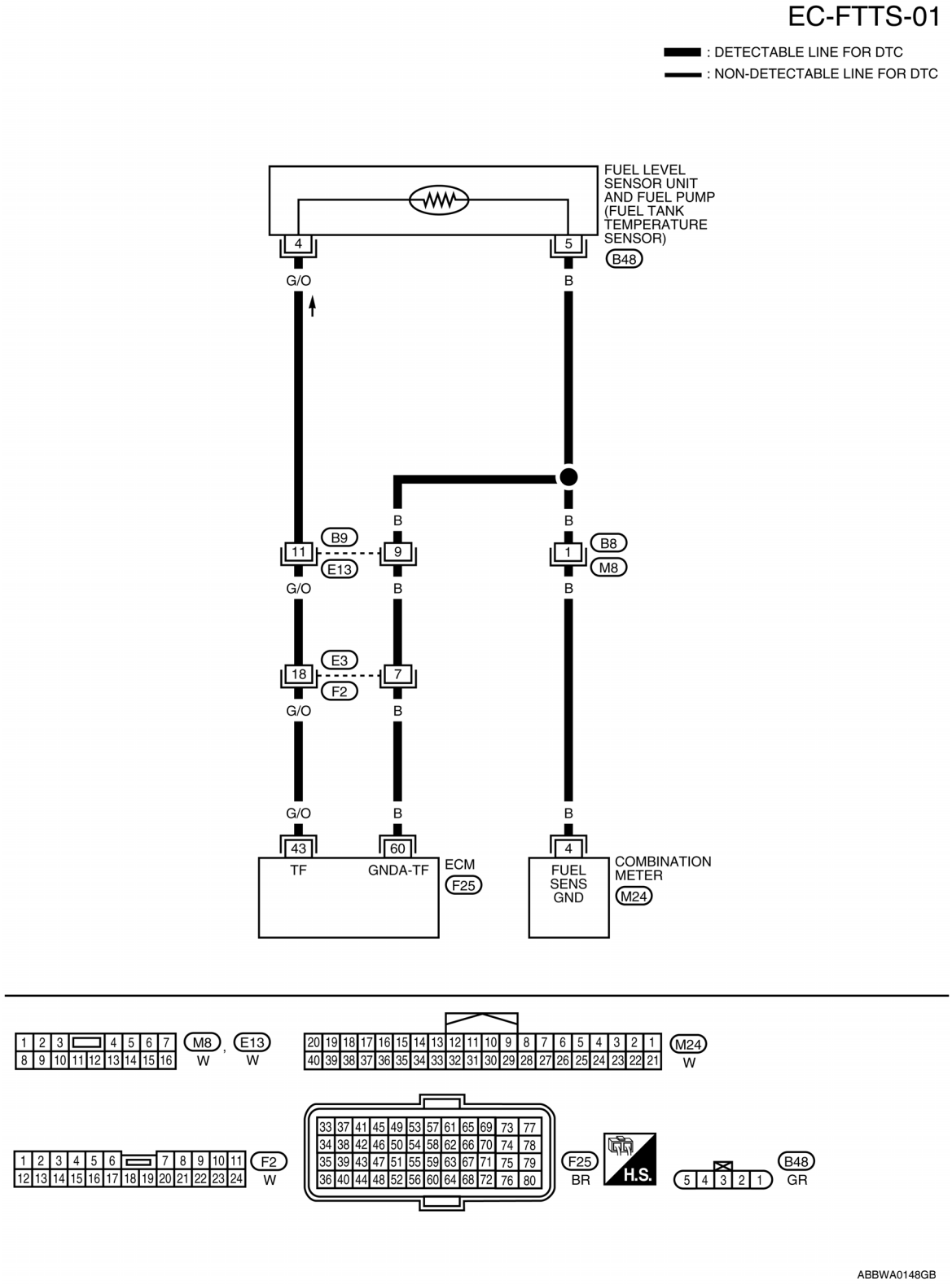

Diagnosis Procedure

INFOID:0000000005284772

1. CHECK GROUND CONNECTIONS

1. Turn ignition switch OFF.

2. Loosen and retighten ground screw on the body.
   Refer to EC-157, "Ground Inspection".
- ⇦ : Vehicle front
- Body ground (1)

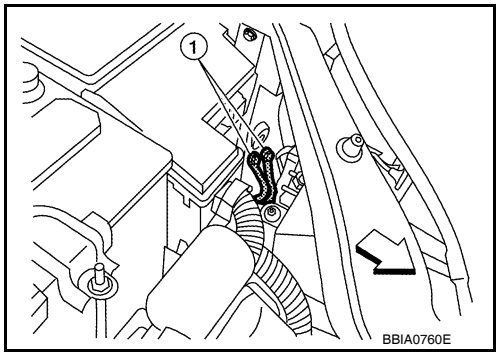

OK or NG

OK >> GO TO 2.
NG >> Repair or replace ground connections.

2. CHECK FUEL TANK TEMPERATURE SENSOR POWER SUPPLY CIRCUIT

1. Disconnect “fuel level sensor unit and fuel pump” harness connector (1).
- ⇦ : Vehicle front
2. Turn ignition switch ON.

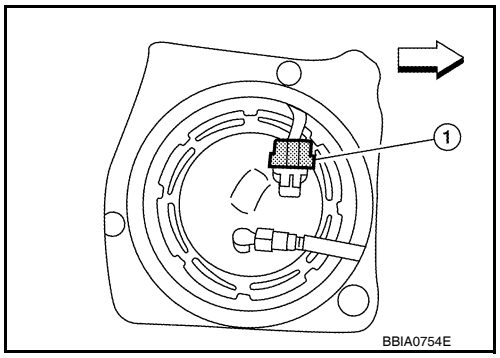

3. Check voltage between “fuel level sensor unit and fuel pump” terminal 4 and ground with CONSULT-III or tester.

Voltage: Approximately 5 V

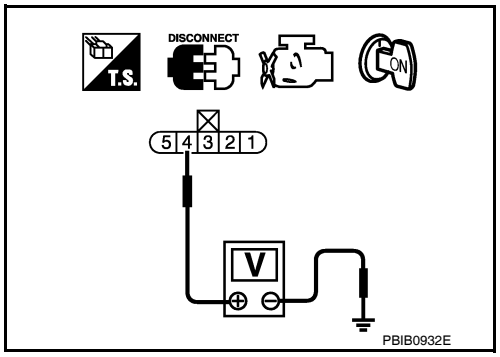

OK or NG

OK >> GO TO 4.
NG >> GO TO 3.

3. DETECT MALFUNCTIONING PART

Check the following.
- Harness connectors B9, E13
- Harness connectors E3, F2
- Harness for open or short to ground or short between ECM and “fuel level sensor unit and fuel pump”

>> Repair open circuit or short to ground or short to power in harness or connector.

4. CHECK FUEL TANK TEMPERATURE SENSOR GROUND CIRCUIT FOR OPEN AND SHORT

1. Turn ignition switch OFF.
2. Disconnect combination meter harness connector.
3. Check harness continuity between “fuel level sensor unit and fuel pump” terminal 5 and combination meter terminal 4, ECM terminal 60. Refer to Wiring Diagram.

Continuity should exist.

4. Also check harness for short to ground and short to power.

OK or NG

OK >> GO TO 6.
NG >> GO TO 5.

5. DETECT MALFUNCTIONING PART

Check the following.
- Harness connectors B8, M8
- Harness connectors B9, E13
- Harness connectors E3, F2
- Harness for open or short between “fuel level sensor unit and fuel pump” and combination meter
- Harness for open or short between “fuel level sensor unit and fuel pump” and ECM

>> Repair open circuit or short to ground or short to power in harness or connector.

6. CHECK FUEL TANK TEMPERATURE SENSOR

Refer to, EC-294, "Component Inspection".

OK or NG

OK >> GO TO 7.
NG >> Replace “fuel level sensor unit and fuel pump”.

7. CHECK INTERMITTENT INCIDENT

Perform EC-152.

>> **INSPECTION END**

Component Inspection

INFOID:0000000005284773

FUEL TANK TEMPERATURE SENSOR

1. Check resistance between “fuel level sensor unit and fuel pump” terminal 4 and 5 by heating with hot water as shown in the figure.

Temperature [°C (°F)]	Resistance (kΩ)
20 (68)	2.3 - 2.7
50 (122)	0.79 - 0.90

2. If NG, replace “fuel level sensor unit and fuel pump”.

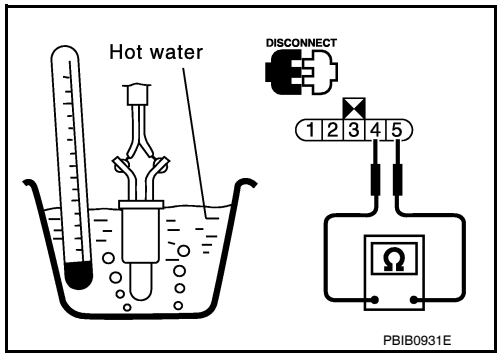

Removal and Installation

INFOID:0000000005284774

FUEL TANK TEMPERATURE SENSOR

Refer to FL-6.

DTC P0196 EOT SENSOR

Component Description

INFOID:0000000005284775

The engine oil temperature sensor is used to detect the engine oil temperature. The sensor modifies a voltage signal from the ECM. The modified signal returns to the ECM as the engine oil temperature input. The sensor uses a thermistor which is sensitive to the change in temperature. The electrical resistance of the thermistor decreases as temperature increases.

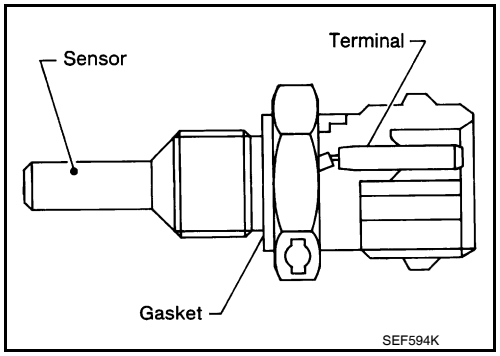

<Reference data>

Engine coolant temperature [°C (°F)]	Voltage* (V)	Resistance (kΩ)
–10 (14)	4.4	7.0 - 11.4
20 (68)	3.5	2.37 - 2.63
50 (122)	2.2	0.68 - 1.00
90 (194)	0.9	0.236 - 0.260
110 (230)	0.6	0.143 - 0.153
150 (302)	0.3	0.050 - 0.065

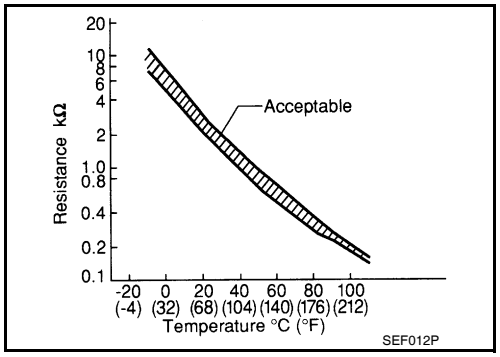

*: This data is reference values and is measured between ECM terminal 27 (Engine oil temperature sensor) and ground.

CAUTION:

Do not use ECM ground terminals when measuring input/output voltage. Doing so may result in damage to the ECM's transistor. Use a ground other than ECM terminals, such as the ground.

On Board Diagnosis Logic

INFOID:0000000005284776

NOTE:

If DTC P0196 is displayed with P0197 or P0198, first perform the trouble diagnosis for DTC P0197 or P0198. Refer to EC-298.

DTC No.	Trouble diagnosis name	DTC detecting condition	Possible cause
P0196 0196	Engine oil temperature sensor range/performance	Rationally incorrect voltage from the sensor is sent to ECM, compared with the voltage signals from engine coolant temperature sensor and intake air temperature sensor.	• Harness or connectors (The sensor circuit is open or shorted) • Engine oil temperature sensor

DTC Confirmation Procedure

INFOID:0000000005284777

NOTE:

If DTC Confirmation Procedure has been previously conducted, always turn ignition switch OFF and wait at least 10 seconds before conducting the next test.

TESTING CONDITION:

Before performing the following procedure, confirm that battery voltage is more than 11 V at idle.

WITH CONSULT-III

1. Start engine and warm it up to normal operating temperature.
2. Turn ignition switch OFF and wait at least 10 seconds.
3. Start engine and let it idle for 5 minutes and 10 seconds.
4. Check 1st trip DTC.

If 1st trip DTC is detected, go to EC-296, "Diagnosis Procedure".
If 1st trip DTC is not detected, go to following steps.

5. Select “DATA MONITOR” mode with CONSULT-III.
6. Check that “COOLAN TEMP/S” indicates above 70°C (158°F).
   If it is above 70°C (158°F), go to the following steps.
   If it is below 70°C (158°F), warm engine up until “COOLAN TEMP/S” indicates more than 70°C (158°F). Then go to the following steps.
7. Turn ignition switch OFF and soak the vehicle at cool place.
8. Turn ignition switch ON.
   NOTE:
   Do not turn ignition switch OFF until step 12
9. Select “DATA MONITOR” mode with CONSULT-III.
10. Check the following.

COOLAN TEMP/S	Below 40°C (104°F)
INT/A TEMP SE	Below 40°C (104°F)
Difference between “COOLAN TEMP/S” and “INT/A TEMP SE”	Within 6°C (11°F)

If they are within the specified range, go to following steps.
If they are out of the specified range, soak the vehicle to met the above conditions. Then go to following steps.
NOTE:
- **Do not turn ignition switch OFF.**
- **If it is supposed to need a long period of time, do not deplete the battery.**

11. Start engine and let it idle for 5 minutes.
12. Check 1st trip DTC.
13. If 1st trip DTC is detected, go to EC-296, "Diagnosis Procedure".

WITH GST
Follow the procedure “WITH CONSULT-III” above.

Diagnosis Procedure

INFOID:0000000005284778

1. CHECK GROUND CONNECTIONS

1. Turn ignition switch OFF.
2. Loosen and retighten ground screws on the body.
   Refer to EC-157, "Ground Inspection".

- ⇦ : Vehicle front
- Body ground (1)

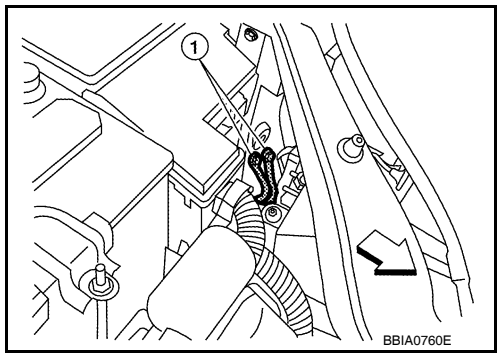

OK or NG

OK >> GO TO 2.
NG >> Repair or replace ground connections.

2. CHECK ENGINE OIL TEMPERATURE SENSOR

Refer to EC-297, "Component Inspection".

OK or NG

OK >> GO TO 3.
NG >> Replace engine oil temperature sensor.

3. CHECK INTERMITTENT INCIDENT

Refer to EC-152.
Refer to EC-299, "Wiring Diagram".

>> **INSPECTION END**

Component Inspection

INFOID:0000000005284779

ENGINE OIL TEMPERATURE SENSOR

1. Check resistance between engine oil temperature sensor terminals 1 and 2 as shown in the figure.

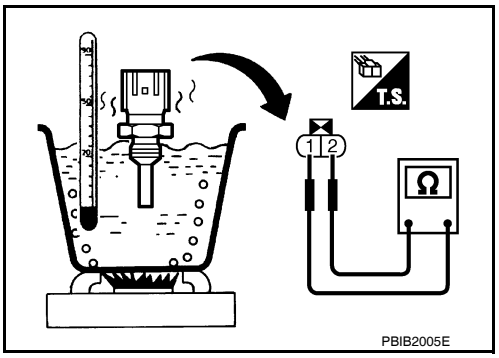

<Reference data>

Engine coolant temperature [°C (°F)]	Resistance (kΩ)
20 (68)	2.37 - 2.63
50 (122)	0.68 - 1.00
90 (194)	0.236 - 0.260

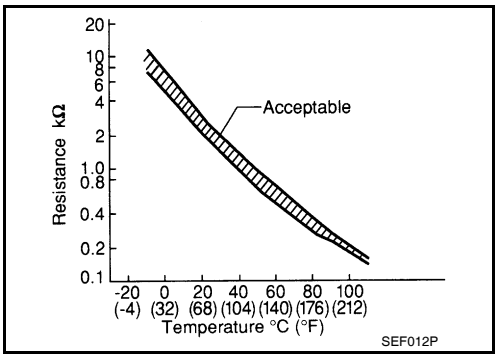

2. If NG, replace engine oil temperature sensor.

Removal and Installation

INFOID:0000000005284780

ENGINE OIL TEMPERATURE SENSOR

Refer to EM-80, "Component".

DTC P0197, P0198 EOT SENSOR

Component Description

INFOID:0000000005284781

The engine oil temperature sensor is used to detect the engine oil temperature. The sensor modifies a voltage signal from the ECM. The modified signal returns to the ECM as the engine oil temperature input. The sensor uses a thermistor which is sensitive to the change in temperature. The electrical resistance of the thermistor decreases as temperature increases.

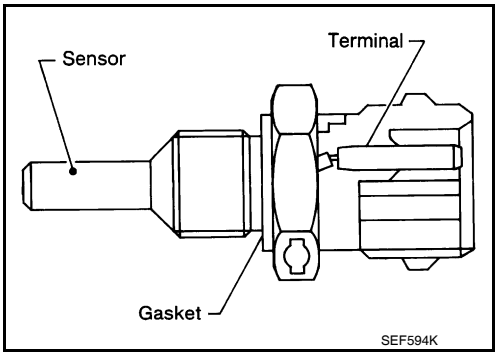

<Reference data>

Engine coolant temperature [°C (°F)]	Voltage* (V)	Resistance (kΩ
–10 (14)	4.4	7.0 - 11.4
20 (68)	3.5	2.37 - 2.63
50 (122)	2.2	0.68 - 1.00
90 (194)	0.9	0.236 - 0.260
110 (230)	0.6	0.143 - 0.153
150 (302)	0.3	0.050 - 0.065

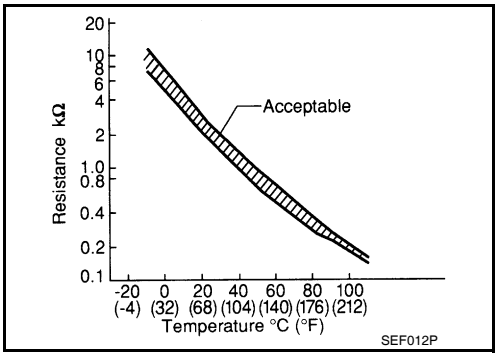

*: This data is reference values and is measured between ECM terminal 27 (Engine oil temperature sensor) and ground.

CAUTION:

Do not use ECM ground terminals when measuring input/output voltage. Doing so may result in damage to the ECM's transistor. Use a ground other than ECM terminals, such as the ground.

On Board Diagnosis Logic

INFOID:0000000005284782

DTC No.	Trouble Diagnosis Name	DTC Detecting Condition	Possible Cause
P0197 0197	Engine oil temperature sensor circuit low input	An excessively low voltage from the sensor is sent to ECM.	• Harness or connectors (Engine oil temperature sensor circuit is open or shorted.) • Engine oil temperature sensor
P0198 0198	Engine oil temperature sensor circuit high input	An excessively high voltage from the sensor is sent to ECM.	

DTC Confirmation Procedure

INFOID:0000000005284783

NOTE:

If DTC Confirmation Procedure has been previously conducted, always turn ignition switch OFF and wait at least 10 seconds before conducting the next test.

1. Start engine and wait at least 5 seconds.
2. Check 1st trip DTC.
3. If 1st trip DTC is detected, go to EC-299, "Diagnosis Procedure".

Wiring Diagram

INFOID:0000000005284784

EC-EOTS-01

: DETECTABLE LINE FOR DTC
: NON-DETECTABLE LINE FOR DTC

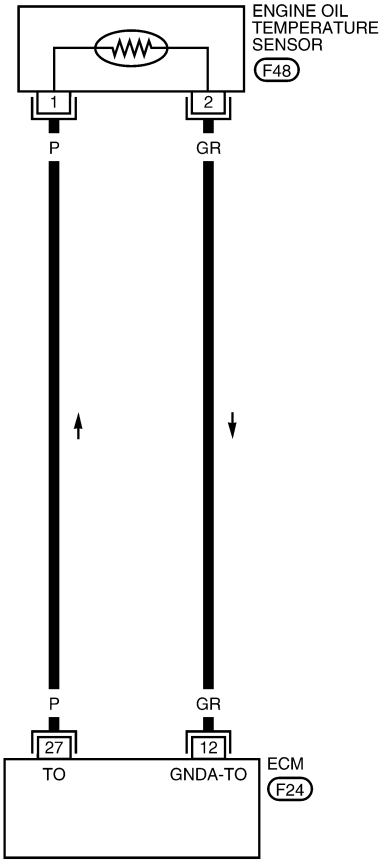

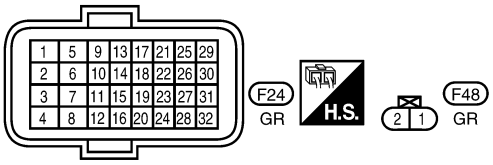

AABWA0303GB

Diagnosis Procedure

INFOID:0000000005284785

1. CHECK GROUND CONNECTIONS

1. Turn ignition switch OFF.

2. Loosen and retighten ground screws on the body.
   Refer to EC-157, "Ground Inspection".
- ⇦ : Vehicle front
- Body ground (1)

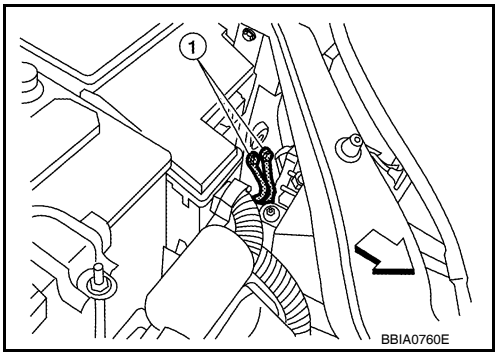

OK or NG

OK >> GO TO 2.
NG >> Repair or replace ground connections.

2. CHECK EOT SENSOR POWER SUPPLY CIRCUIT

1. Disconnect engine oil temperature (EOT) sensor harness connector.
2. Turn ignition switch ON.
3. Check voltage between EOT sensor terminal 1 and ground with CONSULT-III or tester.

Voltage: Approximately 5 V

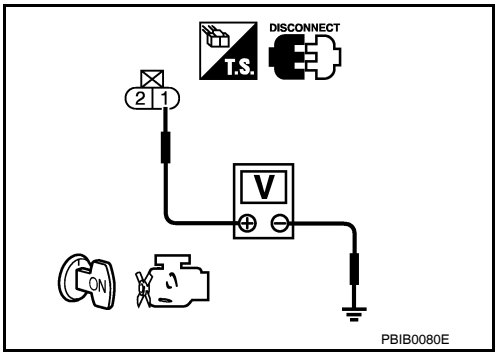

OK or NG

OK >> GO TO 3.
NG >> Repair open circuit or short to ground or short to power in harness or connectors.

3. CHECK EOT SENSOR GROUND CIRCUIT FOR OPEN AND SHORT

1. Turn ignition switch OFF.
2. Disconnect ECM harness connector.
3. Check harness continuity between ECM terminal 12 and ECT sensor terminal 2.
   Refer to Wiring Diagram.

Continuity should exist.

4. Also check harness for short to ground and short to power.

OK or NG

OK >> GO TO 4.
NG >> Repair open circuit or short to ground or short to power in harness or connectors.

4. CHECK ENGINE OIL TEMPERATURE SENSOR

Refer to EC-300, "Component Inspection".

OK or NG

OK >> GO TO 5.
NG >> Replace engine oil temperature sensor.

5. CHECK INTERMITTENT INCIDENT

Refer to EC-152.

>> **INSPECTION END**

Component Inspection

INFOID:0000000005284786

ENGINE OIL TEMPERATURE SENSOR

1. Check resistance between engine oil temperature sensor terminals 1 and 2 as shown in the figure.

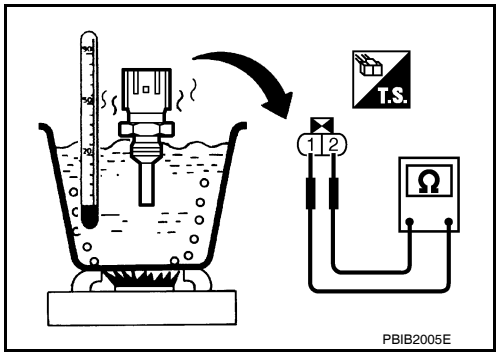

<Reference data>

Engine coolant temperature [°C (°F)]	Resistance (kΩ)
20 (68)	2.37 - 2.63
50 (122)	0.68 - 1.00
90 (194)	0.236 - 0.260

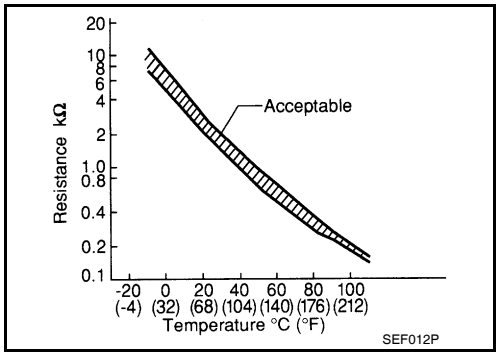

2. If NG, replace engine oil temperature sensor.

Removal and Installation

INFOID:0000000005284787

ENGINE OIL TEMPERATURE SENSOR

Refer to EM-80, "Component".

DTC P0222, P0223 TP SENSOR

Component Description

INFOID:0000000005284788

Electric throttle control actuator consists of throttle control motor, throttle position sensor, etc. The throttle position sensor responds to the throttle valve movement.
The throttle position sensor has two sensors. These sensors are a kind of potentiometers which transform the throttle valve position into output voltage, and emit the voltage signal to the ECM. In addition, these sensors detect the opening and closing speed of the throttle valve and feed the voltage signals to the ECM. The ECM judges the current opening angle of the throttle valve from these signals and the ECM controls the throttle control motor to make the throttle valve opening angle properly in response to driving condition.

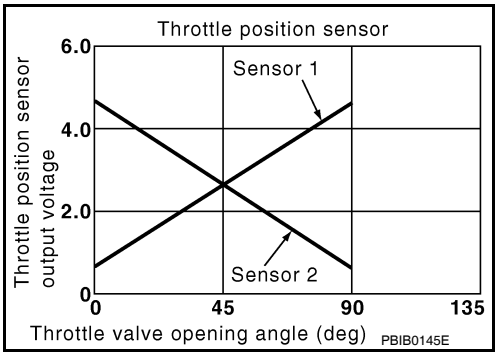

CONSULT-III Reference Value in Data Monitor Mode

INFOID:0000000005284789

Specification data are reference values.

Monitor item	Condition		Specification
TP SEN 1-B1 TP SEN 2-B1*	• Ignition switch: ON (Engine stopped) • Shift lever: D (CVT), 1st (M/T)	Accelerator pedal: Fully released	More than 0.36 V
		Accelerator pedal: Fully depressed	Less than 4.75 V

*: Throttle position sensor 2 signal is converted by ECM internally. Thus, it differs from ECM terminal voltage signal.

On Board Diagnosis Logic

INFOID:0000000005284790

These self-diagnoses have the one trip detection logic.

DTC No.	Trouble diagnosis name	DTC detecting condition	Possible cause
P0222 0222	Throttle position sensor 1 circuit low input	An excessively low voltage from the TP sensor 1 is sent to ECM.	• Harness or connectors (TP sensor 1 circuit is open or shorted.) (APP sensor 2 circuit is shorted.) • Electric throttle control actuator (TP sensor 1) • Accelerator pedal position sensor (APP sensor 2)
P0223 0223	Throttle position sensor 1 circuit high input	An excessively high voltage from the TP sensor 1 is sent to ECM.	

FAIL-SAFE MODE

When the malfunction is detected, the ECM enters fail-safe mode and the MIL lights up.

Engine operation condition in fail-safe mode
The ECM controls the electric throttle control actuator in regulating the throttle opening in order for the idle position to be within +10 degrees. The ECM regulates the opening speed of the throttle valve to be slower than the normal condition. So, the acceleration will be poor.

DTC Confirmation Procedure

INFOID:0000000005284791

NOTE:
If DTC Confirmation Procedure has been previously conducted, always turn ignition switch OFF and wait at least 10 seconds before conducting the next test.
TESTING CONDITION:
Before performing the following procedure, confirm that battery voltage is more than 8 V at idle.

1. Start engine and let it idle for 1 second.
2. Check DTC.
3. If DTC is detected, go to EC-304, "Diagnosis Procedure".

Wiring Diagram

INFOID:0000000005284792

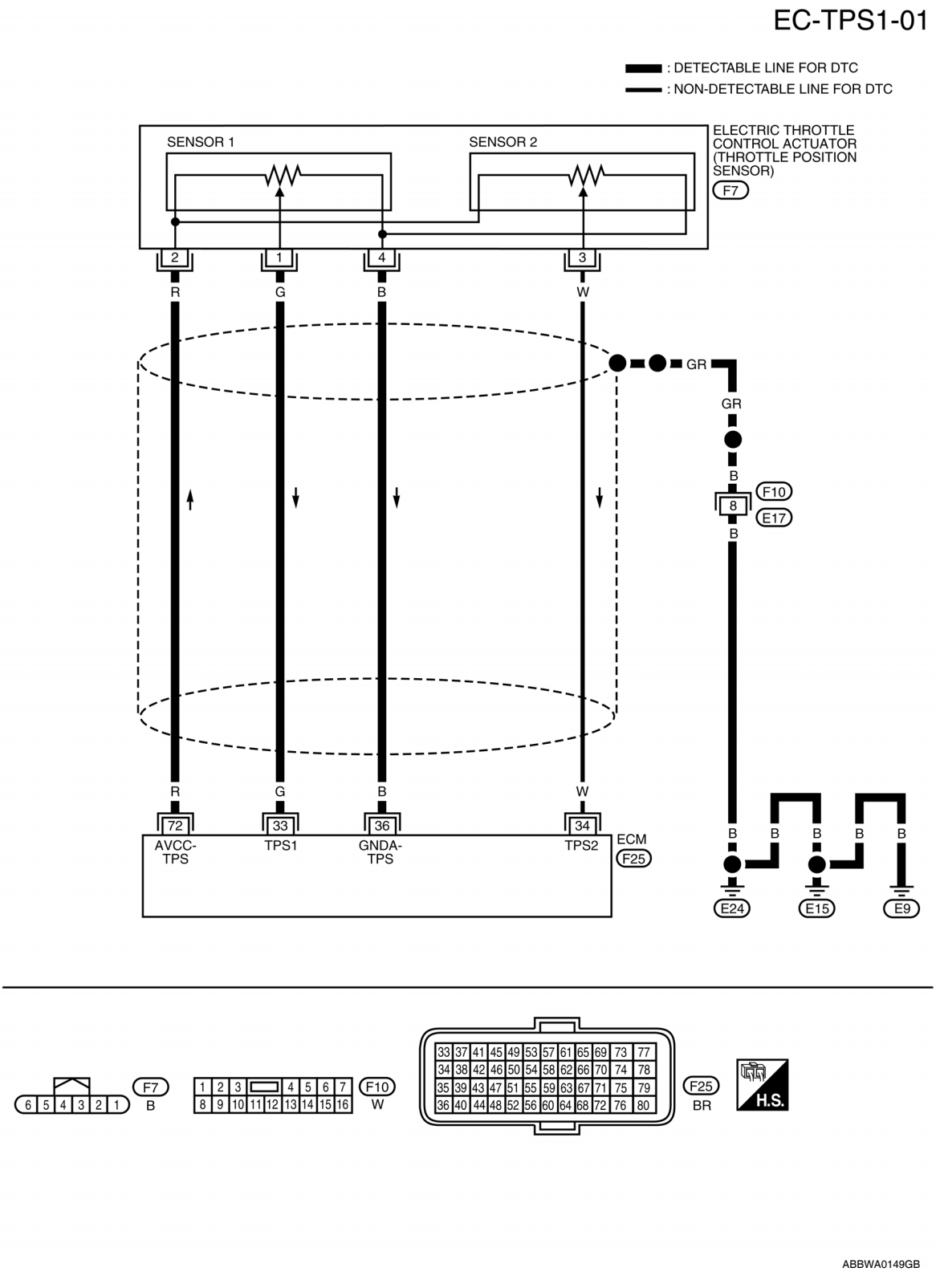

Specification data are reference values and are measured between each terminal and ground.

CAUTION:

Do not use ECM ground terminals when measuring input/output voltage. Doing so may result in damage to the ECM's transistor. Use a ground other than ECM terminals, such as the ground.

TERMINAL NO.	WIRE COLOR	ITEM	CONDITION	DATA (DC Voltage)
33	G	Throttle position sensor 1	**[Ignition switch: ON]** • Engine stopped • Shift lever: D (CVT), 1st (M/T) • Accelerator pedal: Fully released	More than 0.36 V
			[Ignition switch: ON] • Engine stopped • Shift lever: D (CVT), 1st (M/T) • Accelerator pedal: Fully depressed	Less than 4.75 V
34	W	Throttle position sensor 2	**[Ignition switch: ON]** • Engine stopped • Shift lever: D (CVT), 1st (M/T) • Accelerator pedal: Fully released	Less than 4.75 V
			[Ignition switch: ON] • Engine stopped • Shift lever: D (CVT), 1st (M/T) • Accelerator pedal: Fully depressed	More than 0.36 V
36	B	Sensor ground (Throttle position sensor)	**[Engine is running]** • **Warm-up condition** • Idle speed	Approximately 0 V
72	R	Sensor power supply (Throttle position sensor)	**[Ignition switch: ON]**	Approximately 5 V

Diagnosis Procedure

INFOID:0000000005284793

1. CHECK GROUND CONNECTIONS

1. Turn ignition switch OFF.
2. Loosen and retighten ground screws on the body.
   Refer to EC-157, "Ground Inspection".

- ⇦: Vehicle front
- Body ground (1)

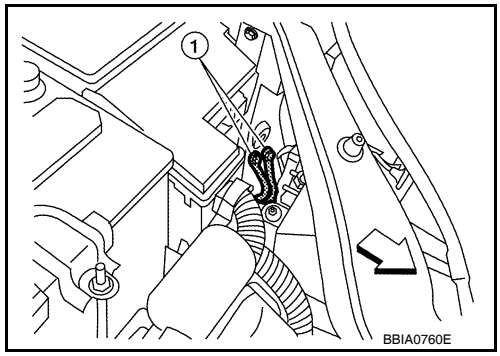

OK or NG

OK >> GO TO 2.
NG >> Repair or replace ground connections.

2. CHECK THROTTLE POSITION SENSOR 1 POWER SUPPLY CIRCUIT-I

1. Disconnect electric throttle control actuator (1) harness connector.
2. Turn ignition switch ON.

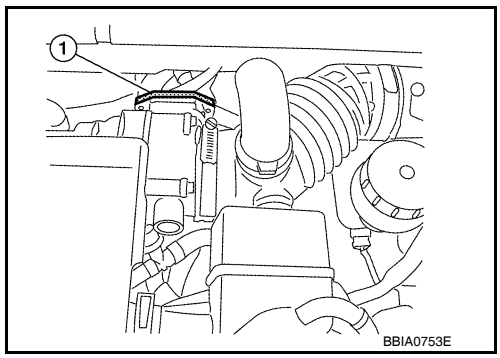

3. Check voltage between electric throttle control actuator terminal 2 and ground with CONSULT-III or tester.

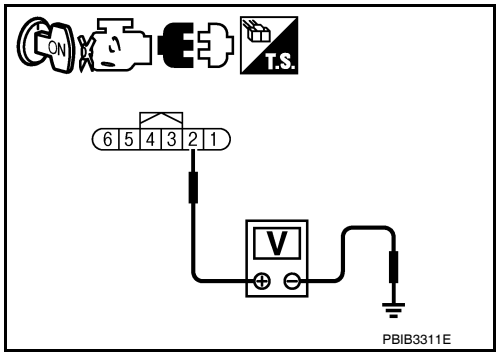

Voltage: Approximately 5 V

OK or NG

OK >> GO TO 3.
NG >> Repair open circuit or short to ground or short to power in harness connectors.

3. CHECK THROTTLE POSITION SENSOR 1 GROUND CIRCUIT FOR OPEN AND SHORT

1. Turn ignition switch OFF.
2. Disconnect ECM harness connector.
3. Check harness continuity between ECM terminal 36 and electric throttle control actuator terminal 4. Refer to Wiring Diagram.

Continuity should exist.

4. Also check harness for short to ground or short to power.

OK or NG

OK >> GO TO 4.
NG >> Repair open circuit or short to ground or short to power in harness or connectors.

4. CHECK THROTTLE POSITION SENSOR 1 INPUT SIGNAL CIRCUIT FOR OPEN AND SHORT

1. Check harness continuity between ECM terminal 33 and electric throttle control actuator terminal 1. Refer to Wiring Diagram.

Continuity should exist.

2. Also check harness for short to ground and short to power.

OK or NG

OK >> GO TO 5.
NG >> Repair open circuit or short to ground or short to power in harness or connectors.

5. CHECK THROTTLE POSITION SENSOR

Refer to EC-305, "Component Inspection".

OK or NG

OK >> GO TO 7.
NG >> GO TO 6.

6. REPLACE ELECTRIC THROTTLE CONTROL ACTUATOR

1. Replace the electric throttle control actuator.
2. Perform EC-99, "Throttle Valve Closed Position Learning".
3. Perform EC-99, "Idle Air Volume Learning".

>> **INSPECTION END**

7. CHECK INTERMITTENT INCIDENT

Refer to EC-152.

>> **INSPECTION END**

Component Inspection

INFOID:0000000005284794

THROTTLE POSITION SENSOR

1. Reconnect all harness connectors disconnected.

2. Perform EC-99, "Throttle Valve Closed Position Learning".
3. Turn ignition switch ON.
4. Set shift lever to D position (CVT) or 1st position (M/T).
5. Check voltage between ECM terminals 33 (TP sensor 1 signal), 34 (TP sensor 2 signal) and ground under the following conditions.

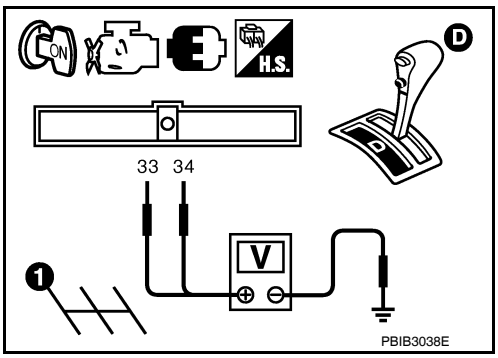

Terminal	Accelerator pedal	Voltage
33 (Throttle position sensor 1)	Fully released	More than 0.36 V
	Fully depressed	Less than 4.75 V
34 (Throttle position sensor 2)	Fully released	Less than 4.75 V
	Fully depressed	More than 0.36 V

6. If NG, replace electric throttle control actuator and go to the next step.
7. Perform EC-99, "Throttle Valve Closed Position Learning".
8. Perform EC-99, "Idle Air Volume Learning".

Removal and Installation

INFOID:0000000005284795

ELECTRIC THROTTLE CONTROL ACTUATOR

Refer to EM-18.

DTC P0300 - P0304 MULTIPLE CYLINDER MISFIRE, NO. 1 - 4 CYLINDER MISFIRE

On Board Diagnosis Logic

INFOID:0000000005284796

When a misfire occurs, engine speed will fluctuate. If the engine speed fluctuates enough to cause the crankshaft position (CKP) sensor (POS) signal to vary, ECM can determine that a misfire is occurring.

Sensor	Input Signal to ECM	ECM function
Crankshaft position sensor (POS)	Engine speed	On board diagnosis of misfire

The misfire detection logic consists of the following two conditions.

1. One Trip Detection Logic (Three Way Catalyst Damage)
   On the 1st trip, when a misfire condition occurs that can damage the three way catalyst (TWC) due to overheating, the MIL will blink.
   When a misfire condition occurs, the ECM monitors the CKP sensor (POS) signal every 200 engine revolutions for a change.
   When the misfire condition decreases to a level that will not damage the TWC, the MIL will turn off.
   If another misfire condition occurs that can damage the TWC on a second trip, the MIL will blink.
   When the misfire condition decreases to a level that will not damage the TWC, the MIL will remain on.
   If another misfire condition occurs that can damage the TWC, the MIL will begin to blink again.
2. Two Trip Detection Logic (Exhaust quality deterioration)
   For misfire conditions that will not damage the TWC (but will affect vehicle emissions), the MIL will only light when the misfire is detected on a second trip. During this condition, the ECM monitors the CKP sensor signal every 1,000 engine revolutions.
   A misfire malfunction can be detected on any one cylinder or on multiple cylinders.

DTC No.	Trouble diagnosis name	DTC detecting condition	Possible cause
P0300 0300	Multiple cylinder misfire detected	Multiple cylinder misfire.	• Improper spark plug • Insufficient compression • Incorrect fuel pressure • Fuel injector circuit is open or shorted • Fuel injector • Intake air leak • The ignition signal circuit is open or shorted • Lack of fuel • Drive plate or flywheel • Air fuel ratio (A/F) sensor 1 • Incorrect PCV hose connection
P0301 0301	No.1 cylinder misfire detected	No. 1 cylinder misfires.	
P0302 0302	No. 2 cylinder misfire detected	No. 2 cylinder misfires.	
P0303 0303	No. 3 cylinder misfire detected	No. 3 cylinder misfires.	
P0304 0304	No. 4 cylinder misfire detected	No. 4 cylinder misfires.	

DTC Confirmation Procedure

INFOID:0000000005284797

CAUTION:
Always drive vehicle in safe manner according to traffic conditions and obey all traffic laws when driving.
NOTE:
If DTC Confirmation Procedure has been previously conducted, always turn ignition switch OFF and wait at least 10 seconds before conducting the next test.

WITH CONSULT-III

1. Turn ignition switch ON and select “DATA MONITOR” mode with CONSULT-III.
2. Start engine and warm it up to normal operating temperature.
3. Turn ignition switch OFF and wait at least 10 seconds.
4. Restart engine and let it idle for about 15 minutes.
5. Check 1st trip DTC.
6. If 1st trip DTC is detected, go to EC-308, "Diagnosis Procedure".
   NOTE:
   If 1st trip DTC is not detected during above procedure, performing the following procedure is advised.

a. Turn ignition switch OFF and wait at least 10 seconds.
b. Start engine and drive the vehicle under the similar conditions to (1st trip) Freeze Frame Data for a certain time. Refer to table below.
Hold the accelerator pedal as steady as possible.

The similar conditions to (1st trip) Freeze Frame Data means the vehicle operation that the following condition should be satisfied at the same time:

Engine speed	Engine speed in the freeze frame data ± 400 rpm
Vehicle speed	Vehicle speed in the freeze frame data ± 10 km/h (6 MPH)
Basic fuel schedule	Basic fuel schedule in the freeze frame data × (1 ± 0.1)
Engine coolant temperature (T) condition	When the freeze frame data shows lower than 70°C (158°F), T should be lower than 70°C (158°F)
	When the freeze frame data shows higher than or equal to 70°C (158°F), T should be higher than or equal to 70°C (158°F)

The time to driving varies according to the engine speed in the freeze frame data.
Refer to the following table.

Engine speed	Time
Around 1,000 rpm	Approximately 10 minutes
Around 2,000 rpm	Approximately 5 minutes
More than 3,000 rpm	Approximately 3.5 minutes

WITH GST
Follow the procedure “WITH CONSULT-III” above.

Diagnosis Procedure

INFOID:0000000005284798

1. CHECK FOR INTAKE AIR LEAK AND PCV HOSE

1. Start engine and run it at idle speed.
2. Listen for the sound of the intake air leak.
3. Check PCV hose connection.

OK or NG

OK >> GO TO 2.
NG >> Repair or replace.

2. CHECK FOR EXHAUST SYSTEM CLOGGING

Stop engine and visually check exhaust tube, three way catalyst and muffler for dents.

OK or NG

OK >> GO TO 3.
NG >> Repair or replace.

3. PERFORM POWER BALANCE TEST

With CONSULT-III
1. Perform “POWER BALANCE” in “ACTIVE TEST” mode.
2. Is there any cylinder which does not produce a momentary engine speed drop?

Without CONSULT-III

When disconnecting each fuel injector (1) harness connector one at a time, is there any cylinder which does not produce a momentary engine speed drop?

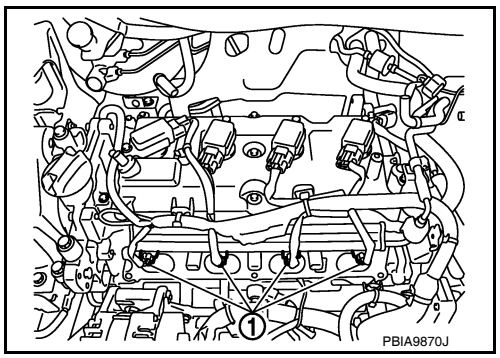

Yes or No

Yes >> GO TO 4.
No >> GO TO 9.

4. CHECK FUEL INJECTOR

Does each fuel injector make an operating sound at idle?

Yes or No

Yes >> GO TO 5.
No >> Check fuel injector(s) and circuit(s). Refer to EC-551.

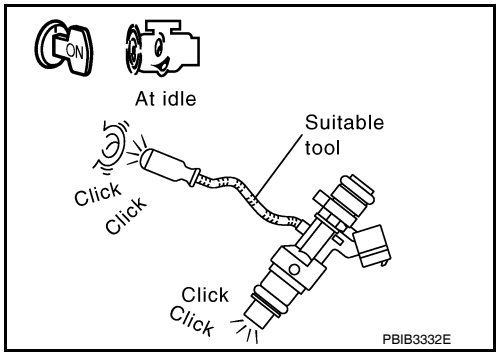

5. CHECK FUNCTION OF IGNITION COIL-I

CAUTION:

Do the following procedure in the place where ventilation is good without the combustible.

1. Turn ignition switch OFF.
2. Remove fuel pump fuse (1) in IPDM E/R (2) to release fuel pressure.
   NOTE:
   Do not use CONSULT-III to release fuel pressure, or fuel pressure applies again during the following procedure.

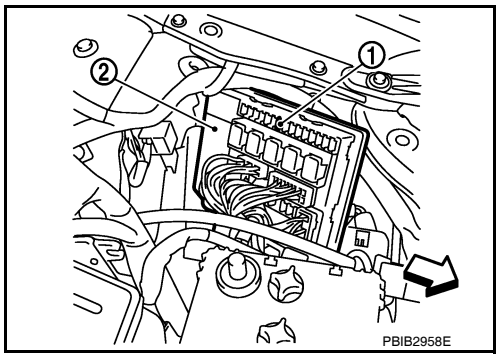

- ⇦ : Vehicle front
3. Start engine.
4. After engine stalls, crank it two or three times to release all fuel pressure.
5. Turn ignition switch OFF.
6. Remove all ignition coil harness connectors to avoid the electrical discharge from the ignition coils.
7. Remove ignition coil and spark plug of the cylinder to be checked.
8. Crank engine for 5 seconds or more to remove combustion gas in the cylinder.
9. Connect spark plug and harness connector to ignition coil.
10. Fix ignition coil using a rope etc. with gap of 13 – 17 mm (0.52 – 0.66 in) between the edge of the spark plug and grounded metal portion as shown in the figure.
11. Crank engine for about 3 seconds, and check whether spark is generated between the spark plug and the grounded metal portion.

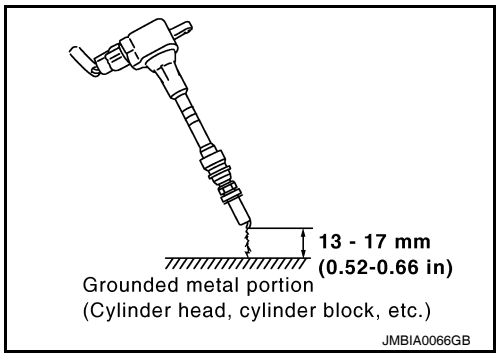

Spark should be generated.

CAUTION:

- **Do not approach to the spark plug and the ignition coil within 50 cm. Be careful not to get an electrical shock while checking, because the electrical discharge voltage becomes 20 kV or more.**
- **It might cause to damage the ignition coil if the gap of more than 17 mm (0.66 in) is taken.**

NOTE:
When the gap is less than 13 mm (0.52 in), the spark might be generated even if the coil is malfunctioning.

OK or NG

OK >> GO TO 9.
NG >> GO TO 6.

6. CHECK FUNCTION OF IGNITION COIL-II

1. Turn ignition switch OFF.
2. Disconnect spark plug and connect a known-good spark plug.
3. Crank engine for about 3 seconds, and recheck whether spark is generated between the spark plug and the grounded metal portion.

Spark should be generated.

OK or NG

OK >> GO TO 7.
NG >> Check ignition coil, power transistor and their circuits. Refer to EC-561.

7. CHECK SPARK PLUG

Check the initial spark plug for fouling, etc.

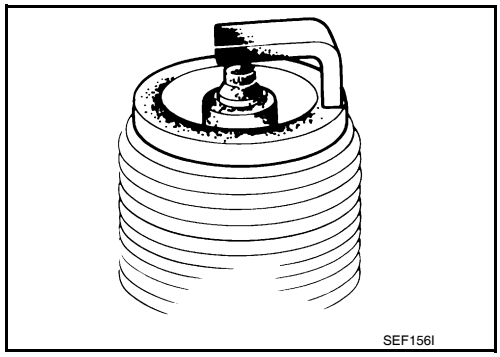

OK or NG

OK >> Replace spark plug(s) with standard type one(s). For spark plug type, refer to MA-27, "SPARK PLUG : Removal and Installation".
NG >> 1. Repair or clean spark plug.
2. GO TO 8.

8. CHECK FUNCTION OF IGNITION COIL-III

1. Reconnect the initial spark plugs.
2. Crank engine for about three seconds, and recheck whether spark is generated between the spark plug and the grounded portion.

Spark should be generated.

OK or NG

OK >> **INSPECTION END**
NG >> Replace spark plug(s) with standard type one(s). For spark plug type, refer to MA-27, "SPARK PLUG : Removal and Installation".

9. CHECK COMPRESSION PRESSURE

Check compression pressure. Refer to EM-65, "On-Vehicle Service".

OK or NG

OK >> GO TO 10.
NG >> Check pistons, piston rings, valves, valve seats and cylinder head gaskets.

10. CHECK FUEL PRESSURE

1. Install all removed parts.
2. Release fuel pressure to zero. Refer to EC-101, "Fuel Pressure Check".
3. Install fuel pressure gauge and check fuel pressure. Refer to EC-101, "Fuel Pressure Check".

At idling: Approximately 350 kPa (3.57 kg/cm^2, 51 psi)

OK or NG

OK >> GO TO 12.
NG >> GO TO 11.

11. DETECT MALFUNCTIONING PART

Check the following.
- Fuel pump and circuit (Refer to EC-556.)
- Fuel pressure regulator (Refer to EC-101, "Fuel Pressure Check".)
- Fuel lines (Refer to EM-36.)
- Fuel filter for clogging

>> Repair or replace.

12. CHECK IGNITION TIMING

Check the following items. Refer to EC-93, "Basic Inspection".

Items	Specifications
Target idle speed	CVT: 675 ± 50 rpm (in P or N position)
	M/T: 700 ± 50 rpm (in Neutral position)
Ignition timing	CVT: 6 ± 5° BTDC (in Neutral position)
	M/T: 6 ± 5° BTDC (in Neutral position)

OK or NG

OK >> GO TO 13.
NG >> Follow the EC-93, "Basic Inspection".

13. CHECK AIR FUEL RATIO (A/F) SENSOR 1 CIRCUIT FOR OPEN AND SHORT

1. Turn ignition switch OFF.
2. Disconnect air fuel ratio (A/F) sensor 1 harness connector (1).
- Air fuel ratio (A/F) sensor 1 (2)
3. Disconnect ECM harness connector.
4. Check harness continuity between the following terminals. Refer to Wiring Diagram.

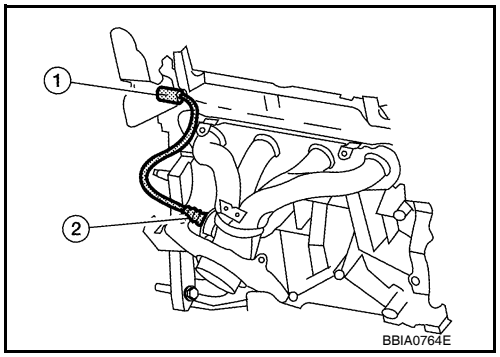

A/F sensor 1 terminal	ECM terminal
1	49
2	53

Continuity should exist.

5. Check harness continuity between ECM terminals 49, 53 or A/F sensor 1 terminals 1, 2 and ground. Refer to Wiring Diagram.

Continuity should not exist.

6. Also check harness for short to power.

OK or NG

OK >> GO TO 14.
NG >> Repair open circuit or short to ground or short to power in harness or connectors.

14. CHECK AIR FUEL RATIO (A/F) SENSOR 1 HEATER

Refer to EC-172, "Component Inspection".

OK or NG

OK >> GO TO 16.

NG >> GO TO 15.

15. REPLACE AIR FUEL RATIO (A/F) SENSOR 1

Replace air fuel ratio (A/F) sensor 1.

CAUTION:

- **Discard any A/F sensor which has been dropped from a height of more than 0.5 m (19.7 in) onto a hard surface such as a concrete floor; use a new one.**
- **Before installing new A/F sensor, clean exhaust system threads using Oxygen Sensor Thread Cleaner tool J-43897-18 or J-43897-12 and approved anti-seize lubricant.**

>> **INSPECTION END**

16. CHECK MASS AIR FLOW SENSOR

With CONSULT-III

1. Start engine and warm it up to normal operating temperature.
2. Check mass air flow sensor signal in “DATA MONITOR” mode with CONSULT-III.

At idling	**: 1.0 - 4.0 g·m/sec**
At 2,500 rpm	**: 2.0 - 10.0 g·m/sec**

With GST

1. Start engine and warm it up to normal operating temperature.
2. Check mass air flow sensor signal in Service $01 with GST.

At idling	**: 1.0 - 4.0 g·m/sec**
At 2,500 rpm	**: 2.0 - 10.0 g·m/sec**

OK or NG

OK >> GO TO 17.
NG >> Check connectors for rusted terminals or loose connections in the mass air flow sensor circuit or ground. Refer to EC-185.

17. CHECK SYMPTOM MATRIX CHART

Check items on the rough idle symptom in EC-111, "Symptom Matrix Chart".

OK or NG

OK >> GO TO 18.
NG >> Repair or replace.

18. ERASE THE 1ST TRIP DTC

Some tests may cause a 1st trip DTC to be set.
Erase the 1st trip DTC from the ECM memory after performing the tests. Refer to EC-62, "Emission-related Diagnostic Information".

>> GO TO 19.

19. CHECK INTERMITTENT INCIDENT

Refer to EC-152.

>> **INSPECTION END**

DTC P0327, P0328 KS

Component Description

INFOID:0000000005284799

The knock sensor (1) is attached to the cylinder block. It senses engine knocking using a piezoelectric element. A knocking vibration from the cylinder block is sensed as vibrational pressure. This pressure is converted into a voltage signal and sent to the ECM.

- ⇦: Vehicle front

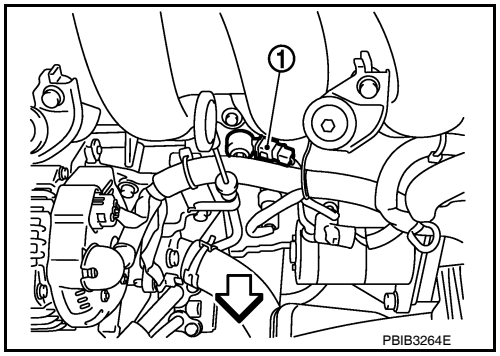

On Board Diagnosis Logic

INFOID:0000000005284800

The MIL will not light up for these self-diagnoses.

DTC No.	Trouble Diagnosis Name	DTC Detected Condition	Possible Cause
P0327 0327	Knock sensor circuit low input	An excessively low voltage from the sensor is sent to ECM.	• Harness or connectors (Knock sensor circuit is open or shorted.) • Knock sensor
P0328 0328	Knock sensor circuit high input	An excessively high voltage from the sensor is sent to ECM.	

DTC Confirmation Procedure

INFOID:0000000005284801

NOTE:
If DTC Confirmation Procedure has been previously conducted, always turn ignition switch OFF and wait at least 10 seconds before conducting the next test.

TESTING CONDITION:
Before performing the following procedure, confirm that battery voltage is more than 10 V at idle.

1. Start engine and run it for at least 5 seconds at idle speed.
2. Check 1st trip DTC.
3. If 1st trip DTC is detected, go to EC-315, "Diagnosis Procedure".

Wiring Diagram

INFOID:0000000005284802

EC-KS-01

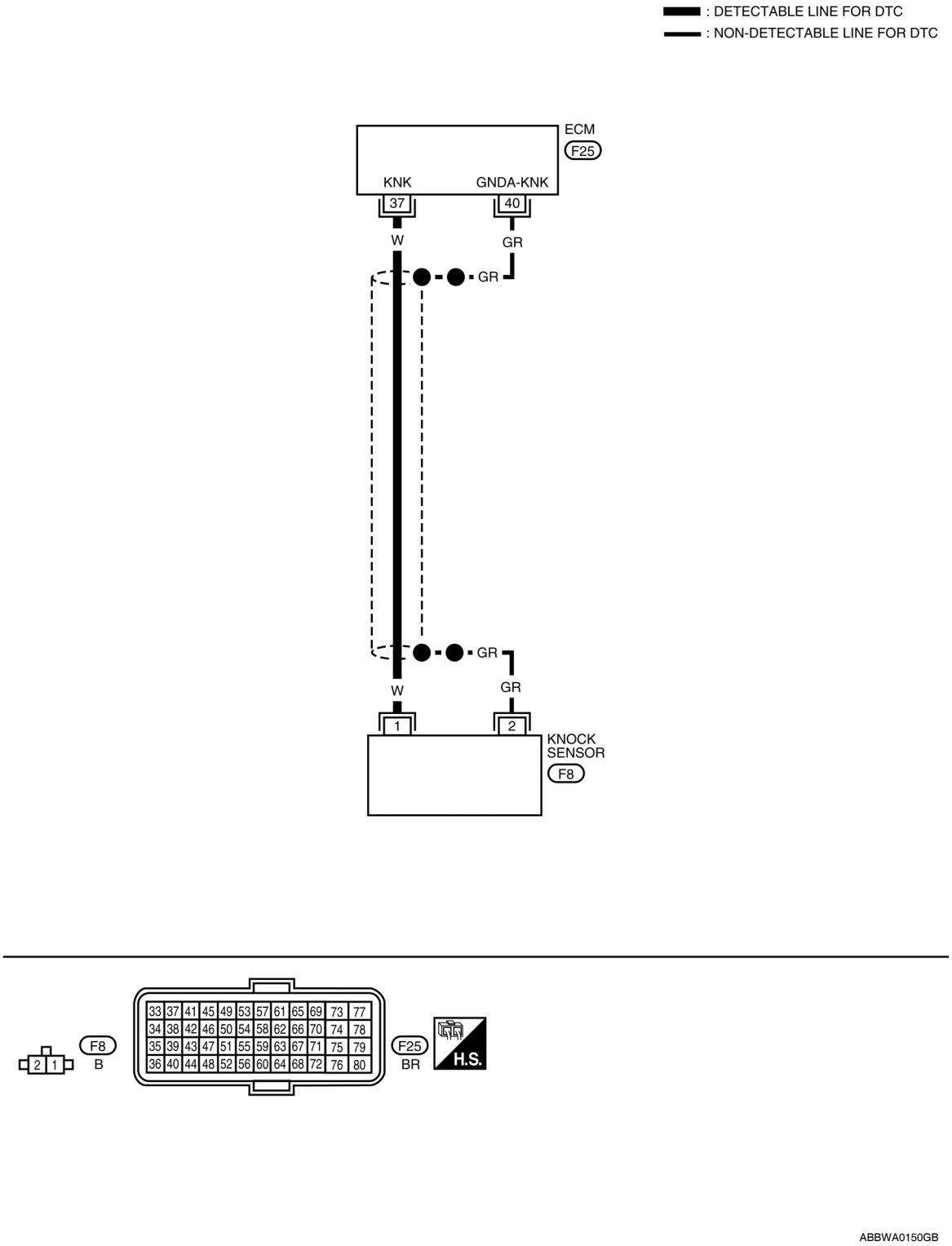

Specification data are reference values and are measured between each terminal and ground.

CAUTION:

Do not use ECM ground terminals when measuring input/output voltage. Doing so may result in damage to the ECM's transistor. Use a ground other than ECM terminals, such as the ground.

TERMINAL NO.	WIRE COLOR	ITEM	CONDITION	DATA (DC Voltage)
37	W	Knock sensor	**[Engine is running]** • Idle speed	Approximately 2.5 V
40	GR	Sensor ground (Knock sensor)	**[Engine is running]** • **Warm-up condition** • Idle speed	Approximately 0 V

Diagnosis Procedure

INFOID:0000000005284803

1. CHECK KNOCK SENSOR INPUT SIGNAL CIRCUIT-I

1. Turn ignition switch OFF.
2. Disconnect ECM harness connector.
3. Check resistance between ECM terminal 37 and ground. Refer to Wiring Diagram.
   NOTE:
   It is necessary to use an ohmmeter which can measure more than 10 MΩ.

   Resistance: Approximately 532 - 588 kΩ [at 20°C (68°F)]

4. Also check harness for short to ground and short to power.

OK or NG

OK >> GO TO 4.
NG >> GO TO 2.

2. CHECK KNOCK SENSOR INPUT SIGNAL CIRCUIT-II

1. Disconnect knock sensor (1) harness connector.
- ⇦: Vehicle front
2. Check harness continuity between ECM terminal 37 and knock sensor terminal 1. Refer to Wiring Diagram.

   Continuity should exist.

3. Also check harness for short to ground and short to power.

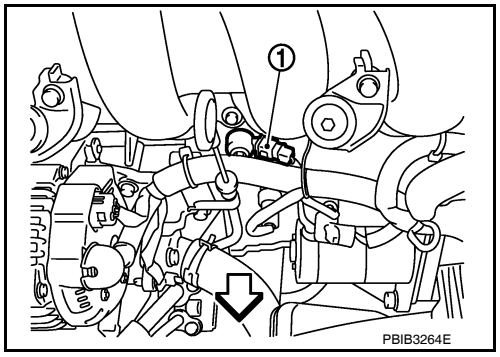

OK or NG

OK >> GO TO 3.
NG >> Repair open circuit or short to ground or short to power in harness or connectors.

3. CHECK KNOCK SENSOR

Refer to EC-316, "Component Inspection".

OK or NG

OK >> GO TO 6.
NG >> Replace knock sensor.

4. CHECK GROUND CONNECTIONS

Loosen and retighten ground screws on the body.
Refer to EC-157, "Ground Inspection".

- ⇦: Vehicle front
- Body ground (1)

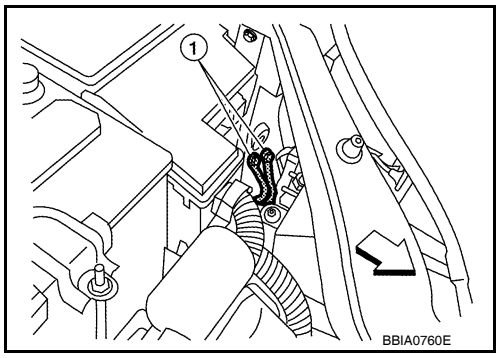

OK or NG

OK >> GO TO 5.
NG >> Repair or replace ground connections.

5. CHECK KNOCK SENSOR SHIELD CIRCUIT FOR OPEN AND SHORT

1. Reconnect knock sensor harness connector.
2. Check harness continuity between ECM terminal 40 and knock sensor terminal 2.
   Refer to Wiring Diagram.

   Continuity should exist

3. Also check harness for short to ground and short to power.

OK or NG

OK >> GO TO 6.
NG >> Repair open circuit or short to ground or short to power in harness or connectors.

6. CHECK INTERMITTENT INCIDENT

Refer to EC-152.

>> **INSPECTION END**

Component Inspection

INFOID:0000000005284804

KNOCK SENSOR

1. Check resistance between knock sensor terminal 1 and ground.
   NOTE:
   It is necessary to use an ohmmeter which can measure more than 10 MΩ.

   Resistance: Approximately 532 - 588 kΩ [at 20°C (68°F)]

   CAUTION:
   Do not use any knock sensors that have been dropped or physically damaged. Use only new ones.
2. If NG, replace knock sensor.

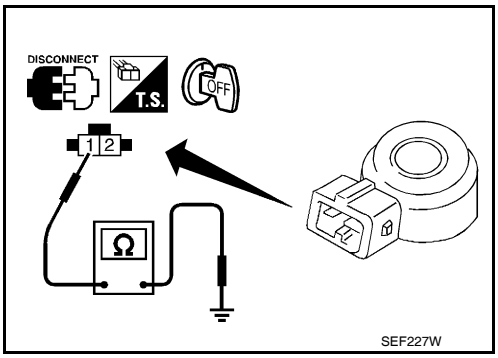

Removal and Installation

INFOID:0000000005284805

KNOCK SENSOR

Refer to EM-80.

DTC P0335 CKP SENSOR (POS)

Component Description

INFOID:0000000005284806

The crankshaft position sensor (POS) is located on the cylinder block rear housing facing the gear teeth (cogs) of the signal plate at the end of the crankshaft. It detects the fluctuation of the engine revolution. The sensor consists of a permanent magnet and Hall IC.
When the engine is running, the high and low parts of the teeth cause the gap with the sensor to change. The changing gap causes the magnetic field near the sensor to change. Due to the changing magnetic field, the voltage from the sensor changes. The ECM receives the voltage signal and detects the fluctuation of the engine revolution.
ECM receives the signals as shown in the figure.

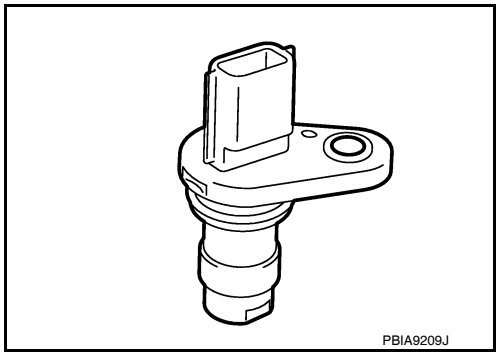

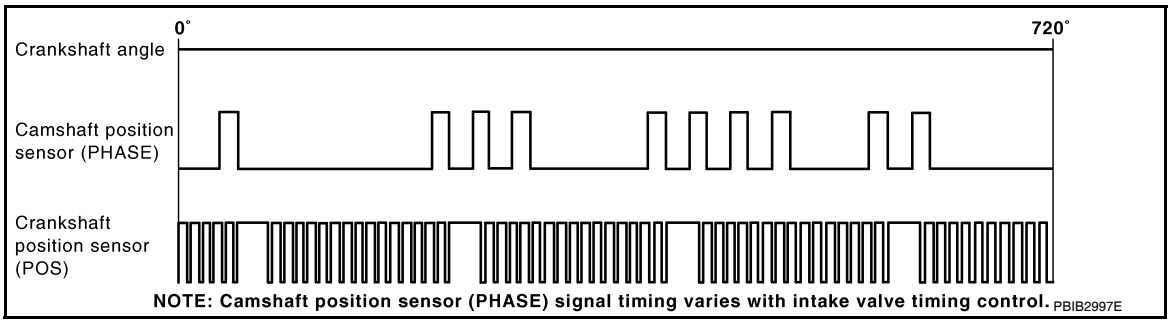

CONSULT-III Reference Value in Data Monitor Mode

INFOID:0000000005284807

Specification data are reference values.

Monitor item	Condition	Specification
ENG SPEED	• Run engine and compare CONSULT-III value with the tachometer indication.	Almost the same speed as the tachometer indication.

On Board Diagnosis Logic

INFOID:0000000005284808

DTC No.	Trouble diagnosis name	DTC detecting condition	Possible cause
P0335 0335	Crankshaft position sensor (POS) circuit	• The crankshaft position sensor (POS) signal is not detected by the ECM during the first few seconds of engine cranking. • The proper pulse signal from the crankshaft position sensor (POS) is not sent to ECM while the engine is running. • The crankshaft position sensor (POS) signal is not in the normal pattern during engine running.	• Harness or connectors [Crankshaft position sensor (POS) circuit is open or shorted.] (Accelerator pedal position sensor circuit is shorted.) (Refrigerant pressure sensor circuit is shorted.) (EVAP control system pressure sensor circuit is sorted.) (Tumble control valve position sensor circuit is shorted.) • Crankshaft position sensor (POS) • Accelerator pedal position sensor • Refrigerant pressure sensor • EVAP control system pressure sensor • Tumble control valve position sensor • Signal plate

DTC Confirmation Procedure

INFOID:0000000005284809

NOTE:

If DTC Confirmation Procedure has been previously conducted, always turn ignition switch OFF and wait at least 10 seconds before conducting the next test.

TESTING CONDITION:

Before performing the following procedure, confirm that battery voltage is more than 10.5 V with ignition switch ON.

1. Crank engine for at least 2 seconds and run it for at least 5 seconds at idle speed.
2. Check 1st trip DTC.
3. If 1st trip DTC is detected, go to EC-320, "Diagnosis Procedure".

Wiring Diagram

INFOID:0000000005284810

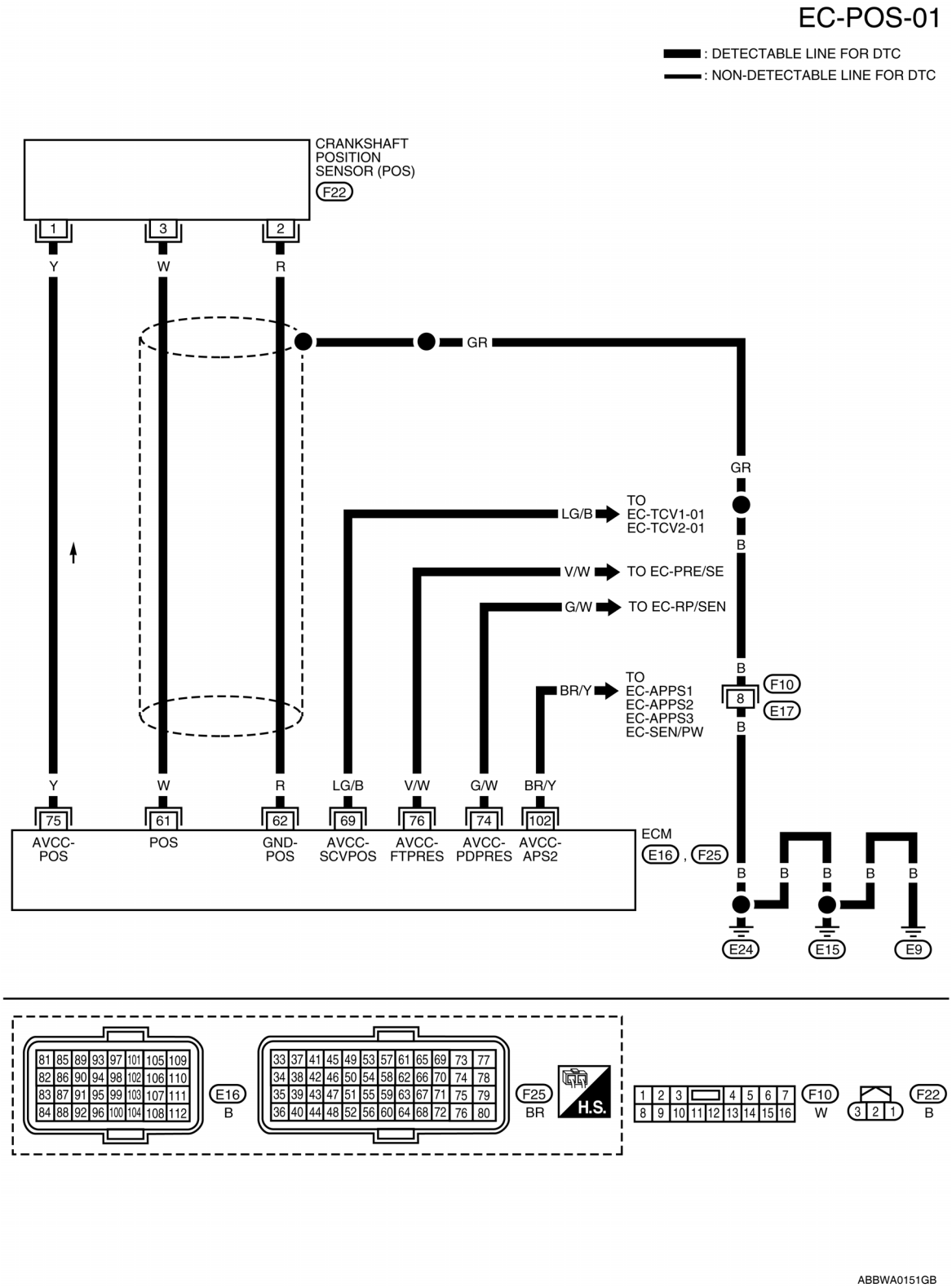

ABBWA0151GB

Specification data are reference values and are measured between each terminal and ground.
Pulse signal is measured by CONSULT-III.

CAUTION:

Do not use ECM ground terminals when measuring input/output voltage. Doing so may result in damage to the ECM's transistor. Use a ground other than ECM terminals, such as the ground.

TERMINAL NO.	WIRE COLOR	ITEM	CONDITION	DATA (DC Voltage)
61	W	Crankshaft position sensor (POS)	**[Engine is running]** • **Warm-up condition** • Idle speed **NOTE:** The pulse cycle changes depending on rpm at idle.	Approximately 4.0 V★ 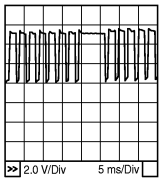 PBIB2998E
			[Engine is running] • Engine speed: 2,000 rpm	Approximately 4.0 V★ 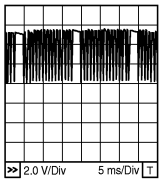 PBIB2999E
62	R	Sensor ground [Crankshaft position sensor (POS)]	**[Engine is running]** • **Warm-up condition** • Idle speed	Approximately 0 V
69	LG/B	Sensor power supply (Tumble control valve position sensor)	**[Ignition switch: ON]**	Approximately 5 V
74	G/W	Sensor power supply (Refrigerant pressure sensor)	**[Ignition switch: ON]**	Approximately 5 V
75	Y	Sensor power supply [Crankshaft position sensor (POS)]	**[Ignition switch: ON]**	Approximately 5 V
76	V/W	EVAP control system pressure sensor power supply	**[Ignition switch: ON]**	Approximately 5 V
102	BR/Y	Sensor power supply (APP sensor 2)	**[Ignition switch: ON]**	Approximately 5 V

★: Average voltage for pulse signal (Actual pulse signal can be confirmed by oscilloscope.)

Diagnosis Procedure

INFOID:0000000005284811

1. CHECK GROUND CONNECTIONS

1. Turn ignition switch OFF.
2. Loosen and retighten ground screws on the body.
   Refer to EC-157, "Ground Inspection".

- ⇦ : Vehicle front
- Body ground (1)

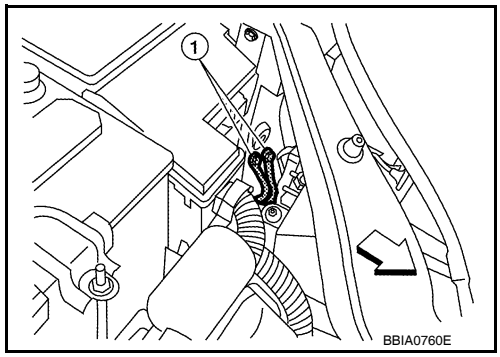

BBIA0760E

OK or NG

OK >> GO TO 2.
NG >> Repair or replace ground connections.

2. CHECK CRANKSHAFT POSITION (CKP) SENSOR (POS) POWER SUPPLY CIRCUIT-I

1. Disconnect crankshaft position (CKP) sensor (POS) (1) harness connector.
2. Turn ignition switch ON.

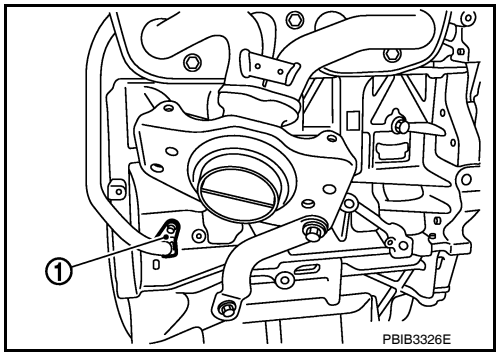

3. Check voltage between CKP sensor (POS) terminal 1 and ground with CONSULT-III or tester.

Voltage: Approximately 5 V

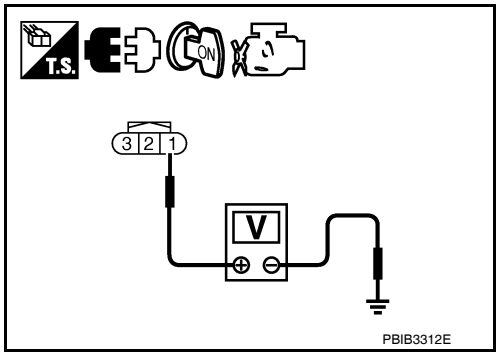

OK or NG

OK >> GO TO 10.
NG >> GO TO 3.

3. CHECK CKP SENSOR (POS) POWER SUPPLY CIRCUIT-II

1. Turn ignition switch OFF.
2. Disconnect ECM harness connector.
3. Check harness continuity between CKP sensor (POS) terminal 1 and ECM terminal 75. Refer to Wiring Diagram.

Continuity should exist.

OK or NG

OK >> GO TO 4.
NG >> Repair open circuit.

4. CHECK POWER SUPPLY CIRCUITS

Check harness for short to power and short to ground, between the following terminals.

ECM terminal	Sensor terminal	Reference Wiring Diagram
69	Tumble control valve position sensor terminal 1	EC-486, "Wiring Diagram"
74	Refrigerant pressure sensor terminal 3	EC-571, "Wiring Diagram"
75	Crankshaft position sensor (POS) terminal 1	EC-319, "Wiring Diagram"
76	EVAP control system pressure sensor terminal 3	EC-378, "Wiring Diagram"
102	APP sensor terminal 5	EC-514, "Wiring Diagram"

OK or NG

OK >> GO TO 5.
NG >> Repair short to ground or short to power in harness or connectors.

5. CHECK TUMBLE CONTROL VALVE POSITION SENSOR

Refer to EC-487, "Diagnosis Procedure".

OK or NG

OK >> GO TO 6.
NG >> Replace intake manifold adapter.

6. CHECK REFRIGERANT PRESSURE SENSOR

Refer to MTC-27.

OK or NG

OK >> GO TO 7.
NG >> Replace refrigerant pressure sensor.

7. CHECK EVAP CONTROL SYSTEM PRESSURE SENSOR

Refer to EC-382, "Component Inspection".

OK or NG

OK >> GO TO 8.
NG >> Replace EVAP control system pressure sensor.

8. CHECK APP SENSOR

Refer to EC-517, "Component Inspection".

OK or NG

OK >> GO TO 14.
NG >> GO TO 9.

9. REPLACE ACCELERATOR PEDAL ASSEMBLY

1. Replace accelerator pedal assembly.
2. Perform EC-99, "Accelerator Pedal Released Position Learning".
3. Perform EC-99, "Throttle Valve Closed Position Learning".
4. Perform EC-99, "Idle Air Volume Learning".

>> **INSPECTION END**

10. CHECK CKP SENSOR (POS) GROUND CIRCUIT FOR OPEN AND SHORT

1. Turn ignition switch OFF.
2. Disconnect ECM harness connector.
3. Check harness continuity between CKP sensor (POS) terminal 2 and ECM terminal 62.
   Refer to Wiring Diagram.

Continuity should exist.

4. Also check harness for short to ground and short to power.

OK or NG

OK >> GO TO 11.
NG >> Repair open circuit or short to ground or short to power in harness or connectors.

11. CHECK CKP SENSOR (POS) INPUT SIGNAL CIRCUIT FOR OPEN AND SHORT

1. Check harness continuity between CKP sensor (POS) terminal 3 and ECM terminal 61.
   Refer to Wiring Diagram.

Continuity should exist.

2. Also check harness for short to ground and short to power.

OK or NG

OK >> GO TO 12.
NG >> Repair open circuit or short to ground or short to power in harness or connectors.

12. CHECK CRANKSHAFT POSITION SENSOR (POS)

Refer to EC-323, "Component Inspection".

OK or NG

OK >> GO TO 13.
NG >> Replace crankshaft position sensor (POS).

13. CHECK GEAR TOOTH

Visually check for chipping signal plate gear tooth.

OK or NG

OK >> GO TO 14.

NG >> Replace the signal plate.

14. CHECK INTERMITTENT INCIDENT

Refer to EC-152.

>> **INSPECTION END**

Component Inspection

INFOID:0000000005284812

CRANKSHAFT POSITION SENSOR (POS)

1. Loosen the fixing bolt of the sensor.
2. Disconnect crankshaft position sensor (POS) harness connector.
3. Remove the sensor.
4. Visually check the sensor for chipping.

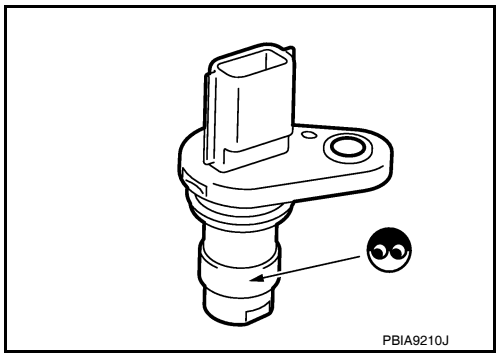

5. Check resistance as shown in the figure.

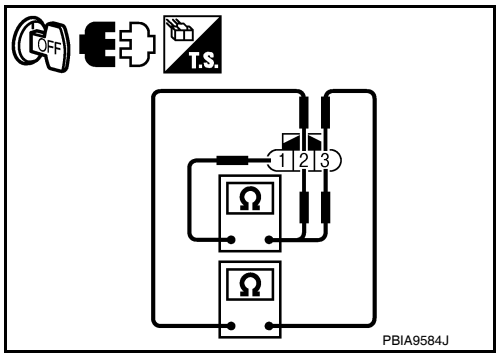

Terminal No. (Polarity)	Resistance [at 25°C (77°F)]
1 (+) - 2 (-)	Except 0 or ∞ Ω
1 (+) - 3 (-)	
2 (+) - 3 (-)	

6. If NG, replace crankshaft position sensor (POS).

Removal and Installation

INFOID:0000000005284813

CRANKSHAFT POSITION SENSOR (POS)

Refer to EM-80.

DTC P0340 CMP SENSOR (PHASE)

Component Description

INFOID:0000000005284814

The camshaft position sensor (PHASE) senses the protrusion of camshaft (INT) to identify a particular cylinder. The camshaft position sensor (PHASE) senses the piston position. When the crankshaft position sensor (POS) system becomes inoperative, the camshaft position sensor (PHASE) provides various controls of engine parts instead, utilizing timing of cylinder identification signals. The sensor consists of a permanent magnet and Hall IC. When engine is running, the high and low parts of the teeth cause the gap with the sensor to change. The changing gap causes the magnetic field near the sensor to change. Due to the changing magnetic field, the voltage from the sensor changes.

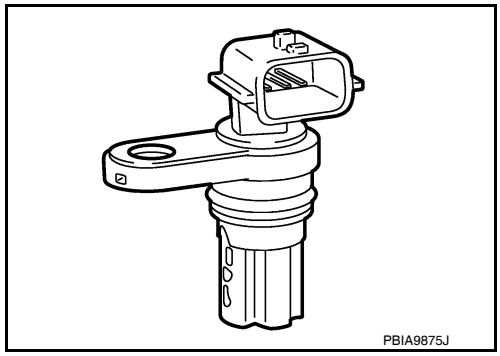

ECM receives the signals as shown in the figure.

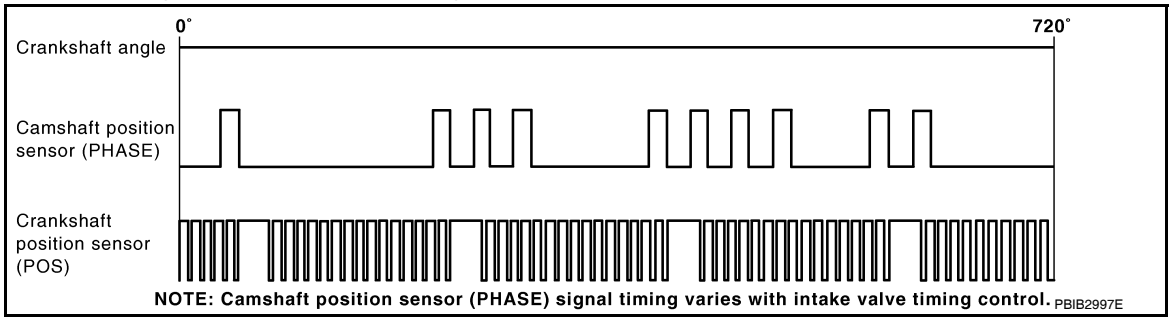

CONSULT-III Reference Value in Data Monitor Mode

INFOID:0000000005284815

Specification data are reference values.

Monitor item	Condition	Specification
ENG SPEED	• Run engine and compare CONSULT-III value with the tachometer indication.	Almost the same speed as the tachometer indication.

On Board Diagnosis Logic

INFOID:0000000005284816

NOTE:
If DTC P0340 is displayed with DTC P0643, first perform the trouble diagnosis for DTC P0643. Refer to EC-424.

DTC No.	Trouble diagnosis name	DTC detecting condition	Possible cause
P0340 0340	Camshaft position sensor (PHASE) circuit	• The cylinder No. signal is not sent to ECM for the first few seconds during engine cranking. • The cylinder No. signal is not set to ECM during engine running. • The cylinder No. signal is not in the normal pattern during engine running.	• Harness or connectors [Camshaft position sensor (PHASE) circuit is open or shorted.] • Camshaft position sensor (PHASE) • Camshaft (INT) • Starter motor (Refer to SC-11.) • Starting system circuit (Refer to SC-11.) • Dead (Weak) battery

DTC Confirmation Procedure

INFOID:0000000005284817

NOTE:
If DTC Confirmation Procedure has been previously conducted, always turn ignition switch OFF and wait at least 10 seconds before conducting the next test.
TESTING CONDITION:
Before performing the following procedure, confirm that battery voltage is more than 10.5 V with ignition switch ON.

1. Crank engine for at least 2 seconds and run it for at least 5 seconds at idle speed.

2. Check 1st trip DTC.
3. If 1st trip DTC is detected, go to EC-326, "Diagnosis Procedure".
   If 1st trip DTC is not detected, go to next step.
4. Maintain engine speed at more than 800 rpm for at least 5 seconds.
5. Check 1st trip DTC.
6. If 1st trip DTC is detected, go to EC-326, "Diagnosis Procedure".

Wiring Diagram

INFOID:0000000005284818

EC-PHASE-01

: DETECTABLE LINE FOR DTC
: NON-DETECTABLE LINE FOR DTC

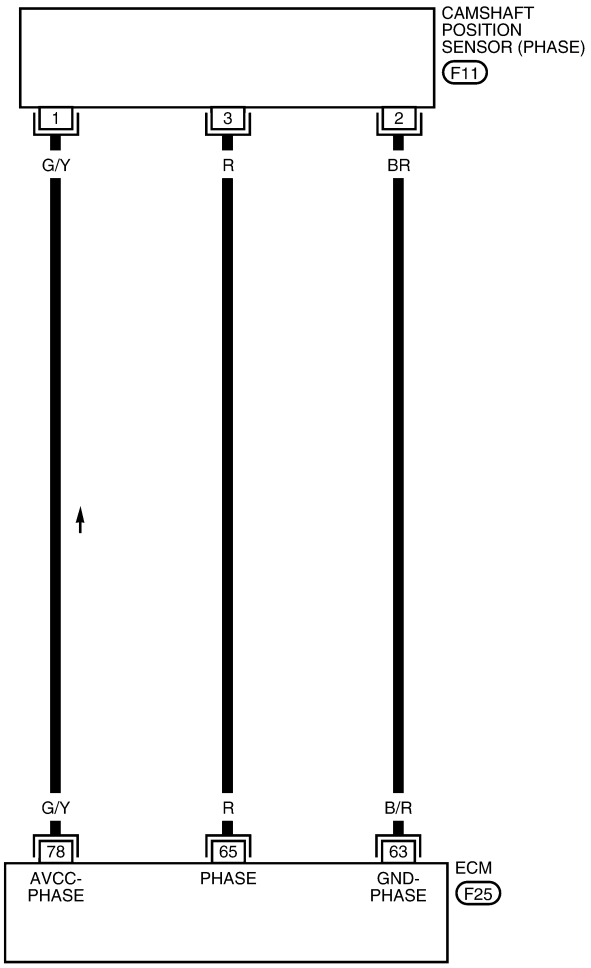

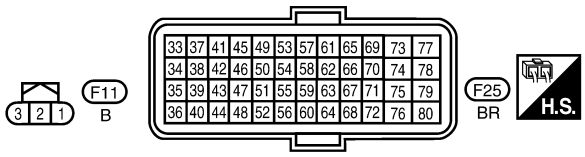

BBWA2885E

Specification data are reference values and are measured between each terminal and ground.
Pulse signal is measured by CONSULT-III.

CAUTION:

Do not use ECM ground terminals when measuring input/output voltage. Doing so may result in damage to the ECM's transistor. Use a ground other than ECM terminals, such as the ground.

TERMINAL NO.	WIRE COLOR	ITEM	CONDITION	DATA (DC Voltage)
63	B/R	Sensor ground [Camshaft position sensor (PHASE)]	**[Engine is running]** • **Warm-up condition** • Idle speed	Approximately 0 V
65	R	Camshaft position sensor (PHASE)	**[Engine is running]** • **Warm-up condition** • Idle speed **NOTE:** The pulse cycle changes depending on rpm at idle.	1.0 - 2.0 V★ 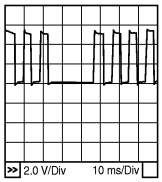 PBIB2986E
			[Engine is running] • Engine speed: 2,000 rpm.	1.0 - 2.0 V★ 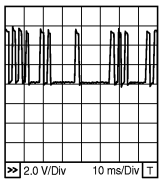 PBIB2987E
78	G/Y	Sensor power supply [Camshaft position sensor (PHASE)]	**[Ignition switch: ON]**	Approximately 5 V

★: Average voltage for pulse signal (Actual pulse signal can be confirmed by oscilloscope.)

Diagnosis Procedure

INFOID:0000000005284819

1. CHECK STARTING SYSTEM

Turn ignition switch to START position.

Does the engine turn over?

Does the starter motor operate?

Yes or No

Yes >> GO TO 2.
No >> Check starting system. (Refer to SC-11.)

2. CHECK GROUND CONNECTIONS

1. Turn ignition switch OFF.

2. Loosen and retighten ground screws on the body.
   Refer to EC-157, "Ground Inspection".
- ⇦ : Vehicle front
- Body ground (1)

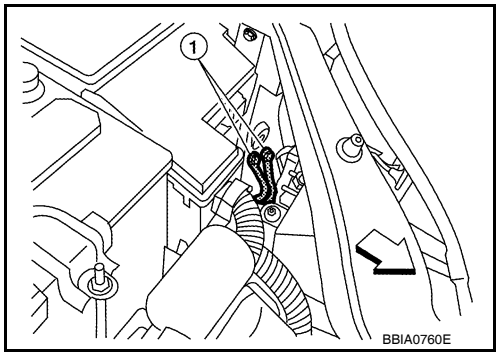

OK or NG

OK >> GO TO 3.
NG >> Repair or replace ground connections.

3. CHECK CAMSHAFT POSITION (CMP) SENSOR (PHASE) POWER SUPPLY CIRCUIT

1. Disconnect camshaft position (CMP) sensor (PHASE) (1) harness connector.
- ⇦: Vehicle front
2. Turn ignition switch ON.

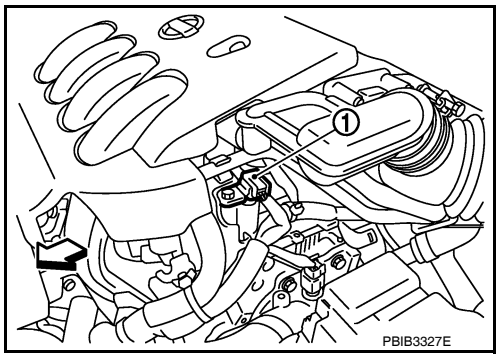

3. Check voltage between CMP sensor (PHASE) terminal 1 and ground with CONSULT-III or tester.

Voltage: Approximately 5 V

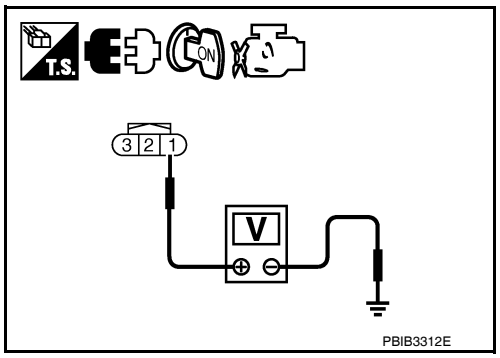

OK or NG

OK >> GO TO 4.
NG >> Repair open circuit or short to ground or short to power in harness or connectors.

4. CHECK CMP SENSOR (PHASE) GROUND CIRCUIT FOR OPEN AND SHORT

1. Turn ignition switch OFF.
2. Disconnect ECM harness connector.
3. Check harness continuity between CMP sensor (PHASE) terminal 2 and ECM terminal 63.
   Refer to Wiring Diagram.

Continuity should exist.

4. Also check harness for short to ground and short to power.

OK or NG

OK >> GO TO 5.
NG >> Repair open circuit or short to ground or short to power in harness or connectors.

5. CHECK CMP SENSOR (PHASE) INPUT SIGNAL CIRCUIT FOR OPEN AND SHORT

1. Check harness continuity between CMP sensor (PHASE) terminal 3 and ECM terminal 65.
   Refer to Wiring Diagram.

Continuity should exist.

2. Also check harness for short to ground and short to power.

OK or NG

OK >> GO TO 6.

NG >> Repair open circuit or short to ground or short to power in harness or connectors.

6. CHECK CAMSHAFT POSITION SENSOR (PHASE)

Refer to EC-328, "Component Inspection".

OK or NG

OK >> GO TO 7.
NG >> Replace camshaft position sensor (PHASE).

7. CHECK CAMSHAFT (INTAKE)

Check the following.
- Accumulation of debris to the signal plate of camshaft (1) rear end
- Chipping signal plate of camshaft rear end

OK or NG

OK >> GO TO 8.
NG >> Remove debris and clean the signal plate of camshaft rear end or replace camshaft.

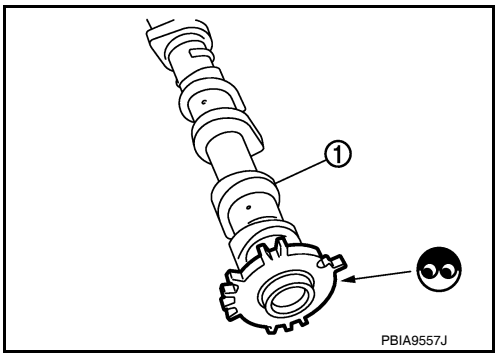

8. CHECK INTERMITTENT INCIDENT

Refer to EC-152.

>> **INSPECTION END**

Component Inspection

INFOID:0000000005284820

CAMSHAFT POSITION SENSOR (PHASE)

1. Loosen the fixing bolt of the sensor.
2. Disconnect camshaft position sensor (PHASE) harness connector.
3. Remove the sensor.
4. Visually check the sensor for chipping.

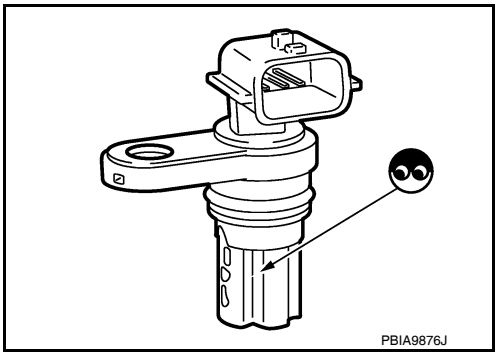

5. Check resistance as shown in the figure.

Terminal No. (Polarity)	Resistance [at 25°C (77°F)]
1 (+) - 2 (-)	Except 0 or ∞ Ω
1 (+) - 3 (-)	
2 (+) - 3 (-)	

6. If NG, replace camshaft position sensor (PHASE).

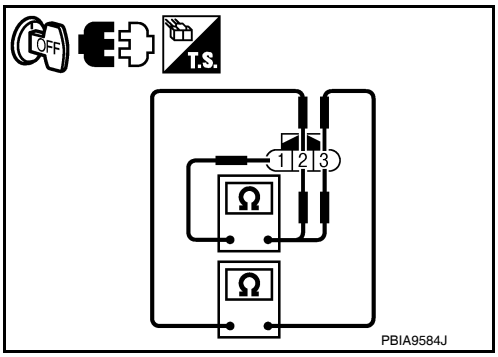

Removal and Installation

INFOID:0000000005284821

CAMSHAFT POSITION SENSOR (PHASE)

Refer to EM-50.

DTC P0420 THREE WAY CATALYST FUNCTION

On Board Diagnosis Logic

INFOID:0000000005284822

The ECM monitors the switching frequency ratio of air fuel ratio (A/F) sensor 1 and heated oxygen sensor 2.
A three way catalyst (manifold) with high oxygen storage capacity will indicate a low switching frequency of heated oxygen sensor 2. As oxygen storage capacity decreases, the heated oxygen sensor 2 switching frequency will increase.
When the frequency ratio of air fuel ratio (A/F) sensor 1 and heated oxygen sensor 2 approaches a specified limit value, the three way catalyst (manifold) malfunction is diagnosed.

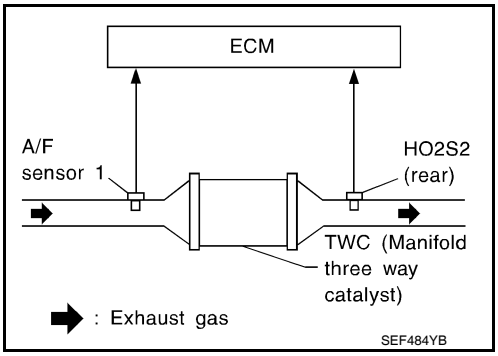

DTC No.	Trouble diagnosis name	DTC detecting condition	Possible cause
P0420 0420	Catalyst system efficiency below threshold	• Three way catalyst (manifold) does not operate properly. • Three way catalyst (manifold) does not have enough oxygen storage capacity.	• Three way catalyst (manifold) • Exhaust tube • Intake air leaks • Fuel injector • Fuel injector leaks • Spark plug • Improper ignition timing

DTC Confirmation Procedure

INFOID:0000000005284823

NOTE:
If DTC Confirmation Procedure has been previously conducted, always turn ignition switch OFF and wait at least 10 seconds before conducting the next test.

WITH CONSULT-III

TESTING CONDITION:
Do not hold engine speed for more than the specified minutes below.

1. Turn ignition switch ON and select “DATA MONITOR” mode with CONSULT-III.
2. Start engine and warm it up to the normal operating temperature.
3. Turn ignition switch OFF and wait at least 10 seconds.
4. Start engine and keep the engine speed between 3,500 and 4,000 rpm for at least 1 minute under no load.
5. Let engine idle for 1 minute.
6. Make sure that “COOLAN TEMP/S” indicates more than 70°C (158°F).
   If not, warm up engine and go to next step when “COOLAN TEMP/S” indication reaches to 70°C (158°F).
7. Open engine hood.
8. Select “DTC & SRT CONFIRMATION” then “SRT WORK SUPPORT” mode with CONSULT-III.
9. Rev engine up to 2,000 to 3,000 rpm and hold it for 3 consecutive minutes then release the accelerator pedal completely.
   If “INCMP” of “CATALYST” changed to “CMPLT”, go to step 12.
10. Wait 5 seconds at idle.
11. Rev engine up to 2,000 to 3,000 rpm and maintain it until “INCMP” of “CATALYST” changes to “CMPLT” (It will take approximately 5 minutes).
    If not “CMPLT”, stop engine and cool it down to less than 70°C (158°F) and then retest from step 1.
12. Select “SELF-DIAG RESULTS” mode with CONSULT-III.
13. Confirm that 1st trip DTC is not detected.
    If 1st trip DTC is detected, go to EC-331, "Diagnosis Procedure".

Overall Function Check

INFOID:0000000005284824

Use this procedure to check the overall function of the three way catalyst (manifold). During this check, a 1st trip DTC might not be confirmed.

WITH GST

1. Start engine and warm it up to the normal operating temperature.
2. Turn ignition switch OFF and wait at least 10 seconds.
3. Start engine and keep the engine speed between 3,500 and 4,000 rpm for at least 1 minute under no load.
4. Let engine idle for 1 minute.
5. Open engine hood.
6. Set voltmeter probe between ECM terminals 50 HO2S2 signal and ground.
7. Keep engine speed at 2,500 rpm constant under no load.
8. Make sure that the voltage does not vary for more than 5 seconds.
   If the voltage fluctuation cycle takes less than 5 seconds, go to EC-331, "Diagnosis Procedure".
   - 1 cycle: 0.6 - 1.0 → 0 - 0.3 → 0.6 - 1.0

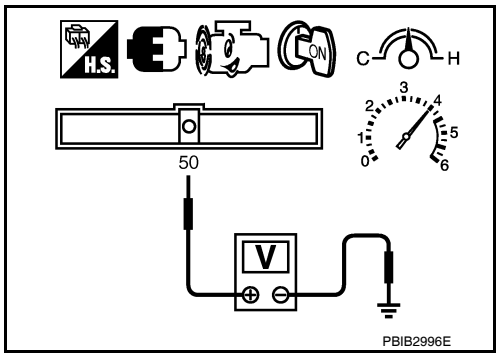

Diagnosis Procedure

INFOID:0000000005284825

1. CHECK EXHAUST SYSTEM

Visually check exhaust tubes and muffler for dent.

OK or NG

OK >> GO TO 2.
NG >> Repair or replace.

2. CHECK EXHAUST GAS LEAK

1. Start engine and run it at idle.
2. Listen for an exhaust gas leak before the three way catalyst (manifold).

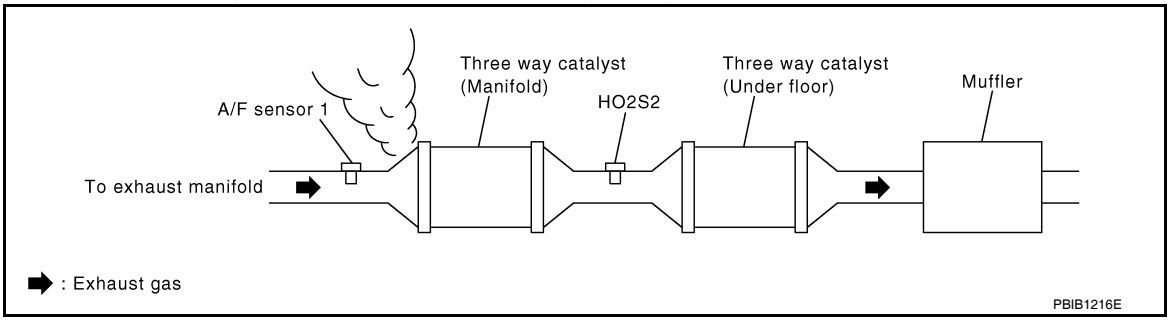

OK or NG

OK >> GO TO 3.
NG >> Repair or replace.

3. CHECK INTAKE AIR LEAK

Listen for an intake air leak after the mass air flow sensor.

OK or NG

OK >> GO TO 4.
NG >> Repair or replace.

4. CHECK IGNITION TIMING

Check the following items. Refer to EC-93, "Basic Inspection".

Items	Specifications
Target idle speed	CVT: 675 ± 50 rpm (in P or N position)
	M/T: 700 ± 50 rpm (in Neutral position)
Ignition timing	CVT: 6 ± 5° BTDC (in P or N position)
	M/T: 6 ± 5° BTDC (in Neutral position)

OK or NG

OK >> GO TO 5.
NG >> Follow the EC-93, "Basic Inspection".

5. CHECK FUEL INJECTORS

1. Stop engine and turn ignition switch OFF.
2. Disconnect ECM harness connector.
3. Turn ignition switch ON.
4. Check voltage between ECM terminals 25, 29, 30, 31 and ground with CONSULT-III or tester. Refer to Wiring Diagram for fuel injectors, EC-552, "Wiring Diagram".

Voltage: Battery voltage

OK or NG

OK >> GO TO 6.
NG >> Perform EC-553, "Diagnosis Procedure".

6. CHECK FUNCTION OF IGNITION COIL-I

CAUTION:
Do the following procedure in the place where ventilation is good without the combustible.

1. Turn ignition switch OFF.
2. Remove fuel pump fuse (1) in IPDM E/R (2) to release fuel pressure.
   NOTE:
   Do not use CONSULT-III to release fuel pressure, or fuel pressure applies again during the following procedure.

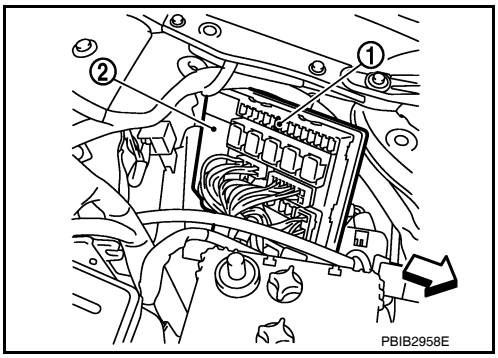

- ⇦ : Vehicle front
3. Start engine.
4. After engine stalls, crank it two or three times to release all fuel pressure.
5. Turn ignition switch OFF.
6. Remove all ignition coil harness connectors to avoid the electrical discharge from the ignition coils.
7. Remove ignition coil and spark plug of the cylinder to be checked.
8. Crank engine for 5 seconds or more to remove combustion gas in the cylinder.
9. Connect spark plug and harness connector to ignition coil.
10. Fix ignition coil using a rope etc. with gap of 13 – 17 mm (0.52 – 0.66 in) between the edge of the spark plug and grounded metal portion as shown in the figure.
11. Crank engine for about 3 seconds, and check whether spark is generated between the spark plug and the grounded metal portion.

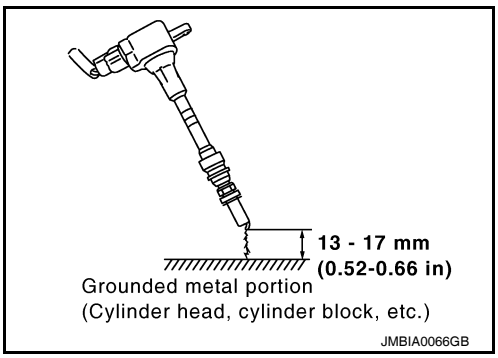

Spark should be generated.

CAUTION:
- **Do not approach to the spark plug and the ignition coil within 50 cm. Be careful not to get an electrical shock while checking, because the electrical discharge voltage becomes 20 kV or more.**
- **It might cause to damage the ignition coil if the gap of more than 17 mm (0.66 in) is taken.**

NOTE:

When the gap is less than 13 mm (0.52 in), the spark might be generated even if the coil is malfunctioning.

OK or NG

OK >> GO TO 10.
NG >> GO TO 7.

7. CHECK FUNCTION OF IGNITION COIL-II

1. Turn ignition switch OFF.
2. Disconnect spark plug and connect a known-good spark plug.
3. Crank engine for about 3 seconds, and recheck whether spark is generated between the spark plug and the grounded metal portion.

Spark should be generated.

OK or NG

OK >> GO TO 8.
NG >> Check ignition coil, power transistor and their circuits. Refer to EC-561.

8. CHECK SPARK PLUG

Check the initial spark plug for fouling, etc.

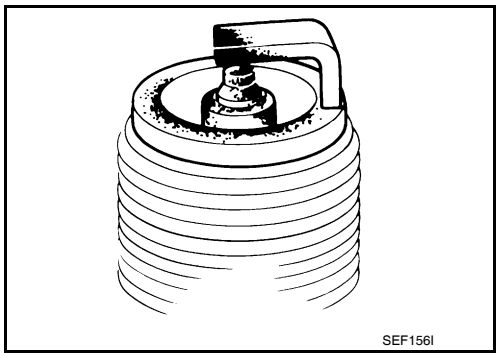

OK or NG

OK >> Replace spark plug(s) with standard type one(s). For spark plug type, refer to MA-27, "SPARK PLUG : Removal and Installation".
NG >> 1. Repair or clean spark plug.
2. GO TO 9.

9. CHECK FUNCTION OF IGNITION COIL-III

1. Reconnect the initial spark plugs.
2. Crank engine for about 3 seconds, and recheck whether spark is generated between the spark plug and the grounded portion.

Spark should be generated.

OK or NG

OK >> **INSPECTION END**
NG >> Replace spark plug(s) with standard type one(s). For spark plug type, refer to MA-27, "SPARK PLUG : Removal and Installation".

10. CHECK FUEL INJECTOR

1. Turn ignition switch OFF.
2. Remove fuel injector assembly.
   Refer to EM-36.
   Keep fuel hose and all fuel injectors connected to fuel tube.
3. Disconnect all ignition coil harness connectors.
4. Reconnect all fuel injector harness connectors disconnected.
5. Turn ignition switch ON.
   Make sure fuel does not drip from fuel injector.

OK or NG

OK (Does not drip.)>>GO TO 11.
NG (Drips.)>>Replace the fuel injector(s) from which fuel is dripping.

11. CHECK INTERMITTENT INCIDENT

Refer to EC-152.

Trouble is fixed.>>**INSPECTION END**
Trouble is not fixed.>>Replace three way catalyst (manifold).

DTC P0441 EVAP CONTROL SYSTEM

System Description

INFOID:0000000005284826

NOTE:
If DTC P0441 is displayed with other DTC such as P2122, P2123 P2127, P2128, P2138, first perform trouble diagnosis for other DTC.

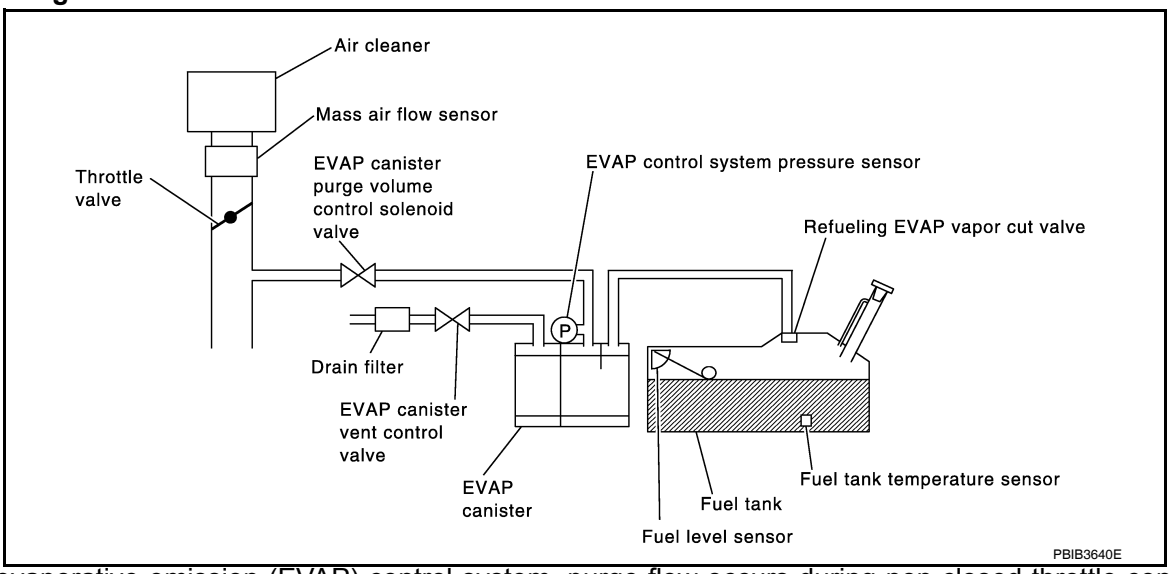

In this evaporative emission (EVAP) control system, purge flow occurs during non-closed throttle conditions. Purge volume is related to air intake volume. Under normal purge conditions (non-closed throttle), the EVAP canister purge volume control solenoid valve is open to admit purge flow. Purge flow exposes the EVAP control system pressure sensor to intake manifold vacuum.

On Board Diagnosis Logic

INFOID:0000000005284827

Under normal conditions (non-closed throttle), sensor output voltage indicates if pressure drop and purge flow are adequate. If not, a malfunction is determined.

DTC No.	Trouble diagnosis name	DTC detecting condition	Possible cause
P0441 0441	EVAP control system incorrect purge flow	• EVAP control system does not operate properly. • EVAP control system has a leak between intake manifold and EVAP control system pressure sensor.	• EVAP canister purge volume control solenoid valve stuck closed • EVAP control system pressure sensor and the circuit • Loose, disconnected or improper connection of rubber tube • Blocked rubber tube • Cracked EVAP canister • EVAP canister purge volume control solenoid valve circuit • Accelerator pedal position sensor • Blocked purge port • EVAP canister vent control valve • Drain filter

DTC Confirmation Procedure

INFOID:0000000005284828

CAUTION:
Always drive vehicle at a safe speed.
NOTE:
If DTC Confirmation Procedure has been previously conducted, always turn ignition switch OFF and wait at least 10 seconds before conducting the next test.
TESTING CONDITION:
Always perform test at a temperature of 5°C (41°F) or more.

WITH CONSULT-III

1. Start engine and warm it up to normal operating temperature.
2. Turn ignition switch OFF and wait at least 10 seconds.
3. Start engine and let it idle for at least 70 seconds.
4. Select “PURG FLOW P0441” of “EVAPORATIVE SYSTEM” in “DTC CONFIRMATION” mode with CONSULT-III.
5. Touch “START”.
   If “COMPLETED” is displayed, go to step 7.
6. When the following conditions are met, “TESTING” will be displayed on the CONSULT-III screen. Maintain the conditions continuously until “TESTING” changes to “COMPLETED”. (It will take at least 35 seconds.)

Shift lever	Suitable position
VHCL SPEED SE	32 - 120 km/h (20 - 75 MPH)
ENG SPEED	500 - 3,800 rpm
B/FUEL SCHDL	1.0 - 10.0 msec
COOLAN TEMP/S	More than 0°C (32 °F)

If TESTING is not changed for a long time, retry from step 2.

7. Make sure that “OK” is displayed after touching “ON-BOARD DIAGNOSIS”. If “NG” is displayed, refer to EC-336, "Diagnosis Procedure".

Overall Function Check

INFOID:0000000005284829

Use this procedure to check the overall monitoring function of the EVAP control system purge flow monitoring. During this check, a 1st trip DTC might not be confirmed.

WITH GST

1. Lift up drive wheels.
2. Start engine and warm it up to normal operating temperature.
3. Turn ignition switch OFF and wait at least 10 seconds.
4. Start engine and wait at least 70 seconds.
5. Set voltmeter probes to ECM terminals 42 (EVAP control system pressure sensor signal) and ground.
6. Check EVAP control system pressure sensor value at idle speed and note it.
7. Establish and maintain the following conditions for at least 1 minute.

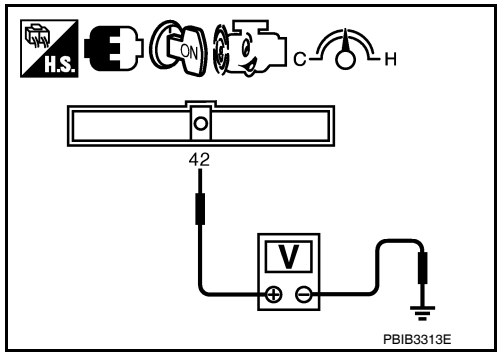

Air conditioner switch	ON
Headlamp switch	ON
Rear window defogger switch	ON
Engine speed	Approx. 3,000 rpm
Shift lever	Any position other than P, N or R

8. Verify that EVAP control system pressure sensor value stays 0.1 V less than the value at idle speed (measured at step 6) for at least 1 second.
9. If NG, go to EC-336, "Diagnosis Procedure".

Diagnosis Procedure

INFOID:0000000005284830

1. CHECK EVAP CANISTER

1. Turn ignition switch OFF.
2. Check EVAP canister for cracks.

OK or NG

OK (With CONSULT-III)>>GO TO 2.
OK (Without CONSULT-III)>>GO TO 3.
NG >> Replace EVAP canister.

2. CHECK PURGE FLOW

With CONSULT-III

1. Disconnect vacuum hose connected to EVAP canister purge volume control solenoid valve at EVAP service port and install vacuum gauge. For the location of EVAP service port, refer to EC-45, "Description".
2. Start engine and let it idle.
3. Select “PURG VOL CONT/V” in “ACTIVE TEST” mode with CONSULT-III.
4. Rev engine up to 2,000 rpm.
5. Touch “Qd” and “Qu” on CONSULT-III screen to adjust “PURG VOL CONT/V” opening and check vacuum existence.

PURG VOL CONT/V	VACUUM
100%	Should exist.
0%	Should not exist.

OK or NG

OK >> GO TO 7.
NG >> GO TO 4.

3. CHECK PURGE FLOW

Without CONSULT-III

1. Start engine and warm it up to normal operating temperature.
2. Stop engine.
3. Disconnect vacuum hose connected to EVAP canister purge volume control solenoid valve at EVAP service port and install vacuum gauge. For the location of EVAP service port, refer to EC-45, "Description".
4. Start engine and let it idle.
   Do not depress accelerator pedal even slightly.
5. Check vacuum gauge indication before 60 seconds passed after starting engine.

   Vacuum should not exist.

6. Revving engine up to 2,000 rpm after 100 seconds passed after starting engine.

   Vacuum should exist.

OK or NG

OK >> GO TO 7.
NG >> GO TO 4.

4. CHECK EVAP PURGE LINE

1. Turn ignition switch OFF.
2. Check EVAP purge line for improper connection or disconnection.
   Refer to EC-45, "Description".

OK or NG

OK >> GO TO 5.
NG >> Repair it.

5. CHECK EVAP PURGE HOSE AND PURGE PORT

1. Disconnect purge hoses connected to EVAP service port **A** and EVAP canister purge volume control solenoid valve **B**.
2. Blow air into each hose and EVAP purge port **C**.

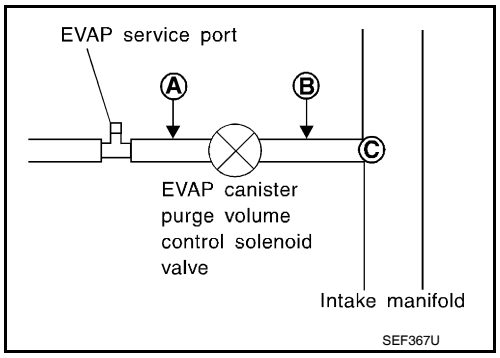

3. Check that air flows freely.

OK or NG

OK (With CONSULT-III)>>GO TO 6.
OK (Without CONSULT-III)>>GO TO 7.
NG >> Repair or clean hoses and/or purge port.

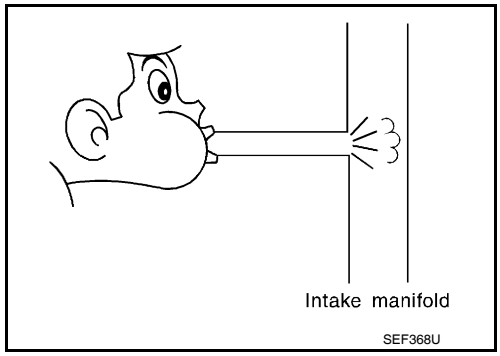

6. CHECK EVAP CANISTER PURGE VOLUME CONTROL SOLENOID VALVE

With CONSULT-III

1. Start engine.
2. Perform “PURG VOL CONT/V” in “ACTIVE TEST” mode with CONSULT-III. Check that engine speed varies according to the valve opening.

OK or NG

OK >> GO TO 8.
NG >> GO TO 7.

7. CHECK EVAP CANISTER PURGE VOLUME CONTROL SOLENOID VALVE

Refer to EC-360, "Component Inspection".

OK or NG

OK >> GO TO 8.
NG >> Replace EVAP canister purge volume control solenoid valve.

8. CHECK EVAP CONTROL SYSTEM PRESSURE SENSOR CONNECTOR

1. Disconnect EVAP control system pressure sensor harness connector.
2. Check connectors for water.

Water should not exist

OK or NG

OK >> GO TO 9.
NG >> Replace EVAP control system pressure sensor.

9. CHECK EVAP CONTROL SYSTEM PRESSURE SENSOR FUNCTION

Refer to EC-376 for DTC P0452 and EC-383 for DTC P0453.

OK or NG

OK >> GO TO 10.
NG >> Replace EVAP control system pressure sensor.

10. CHECK RUBBER TUBE FOR CLOGGING

1. Disconnect rubber tube connected to EVAP canister vent control valve.
2. Check the rubber tube for clogging.

OK or NG

OK >> GO TO 11.
NG >> Clean the rubber tube using an air blower.

11. CHECK DRAIN FILTER

Refer to EC-339, "Component Inspection".

OK or NG

OK >> GO TO 12.
NG >> Replace drain filter.

12. CHECK EVAP CANISTER VENT CONTROL VALVE

Refer to EC-365, "Component Inspection".

OK or NG

OK >> GO TO 13.
NG >> Replace EVAP canister vent control valve.

13. CHECK EVAP PURGE LINE

Inspect EVAP purge line (pipe and rubber tube). Check for evidence of leaks.
Refer to EC-45, "Description".

OK or NG

OK >> GO TO 14.
NG >> Replace it.

14. CLEAN EVAP PURGE LINE

Clean EVAP purge line (pipe and rubber tube) using air blower.

>> GO TO 15.

15. CHECK INTERMITTENT INCIDENT

Refer to EC-152.

>> **INSPECTION END**

Component Inspection

INFOID:0000000005284831

DRAIN FILTER

1. Check visually for insect nests in the drain filter air inlet.
2. Check visually for cracks or flaws in the appearance.
3. Check visually for cracks or flaws in the hose.
4. Blow air into port A and check that it flows freely out of port B.
5. Block port B.
6. Blow air into port A and check that there is no leakage.
7. If NG, replace drain filter.

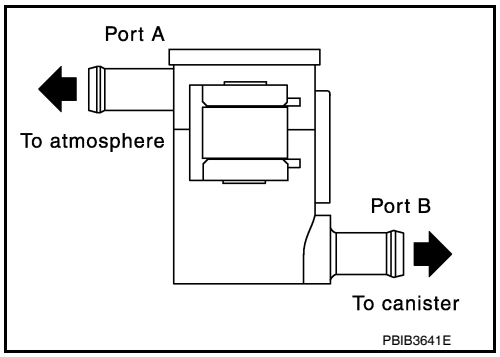

DTC P0442 EVAP CONTROL SYSTEM

On Board Diagnosis Logic

INFOID:0000000005284832

This diagnosis detects leaks in the EVAP purge line using engine intake manifold vacuum.
If pressure does not increase, the ECM will check for leaks in the line between the fuel tank and EVAP canister purge volume control solenoid valve, under the following Vacuum test conditions.
The EVAP canister vent control valve is closed to shut the EVAP purge line off. The EVAP canister purge volume control solenoid valve will then be opened to depressurize the EVAP purge line using intake manifold vacuum. After this occurs, the EVAP canister purge volume control solenoid valve will be closed.

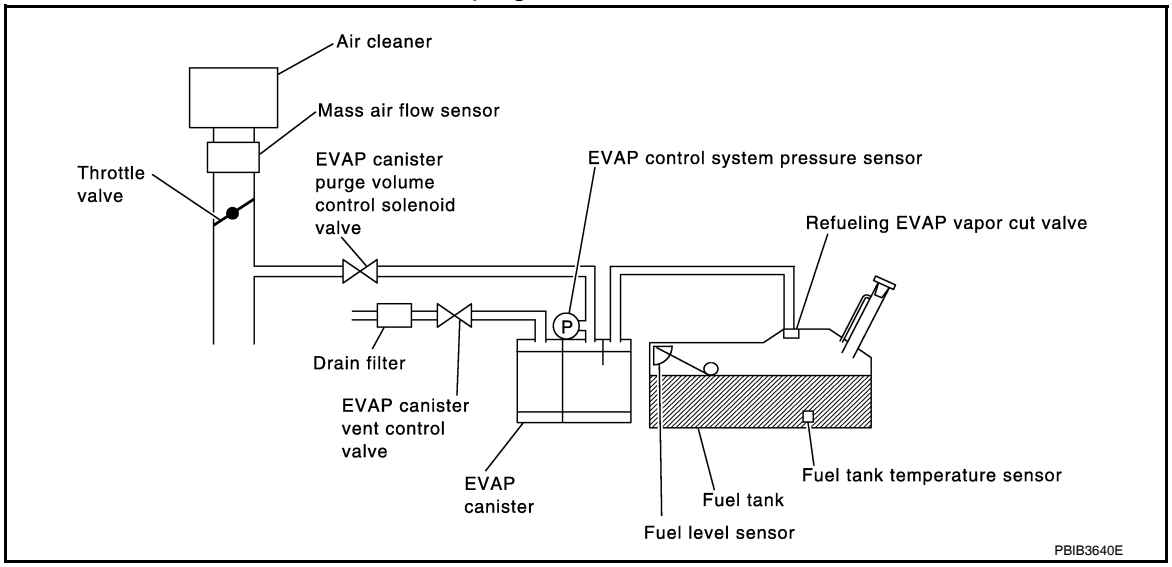

DTC No.	Trouble diagnosis name	DTC detecting condition	Possible cause
P0442 0442	EVAP control system small leak detected (negative pressure)	EVAP control system has a leak, EVAP control system does not operate properly.	• Incorrect fuel tank vacuum relief valve • Incorrect fuel filler cap used • Fuel filler cap remains open or fails to close. • Foreign matter caught in fuel filler cap. • Leak is in line between intake manifold and EVAP canister purge volume control solenoid valve. • Foreign matter caught in EVAP canister vent control valve. • EVAP canister or fuel tank leaks • EVAP purge line (pipe and rubber tube) leaks • EVAP purge line rubber tube bent • Loose or disconnected rubber tube • EVAP canister vent control valve and the circuit • EVAP canister purge volume control solenoid valve and the circuit • Fuel tank temperature sensor • O-ring of EVAP canister vent control valve is missing or damaged • Drain filter • EVAP canister is saturated with water • EVAP control system pressure sensor • Fuel level sensor and the circuit • Refueling EVAP vapor cut valve • ORVR system leaks

CAUTION:
- **Use only a genuine NISSAN fuel filler cap as a replacement. If an incorrect fuel filler cap is used, the MIL may come on.**
- **If the fuel filler cap is not tightened properly, the MIL may come on.**
- **Use only a genuine NISSAN rubber tube as a replacement.**

DTC Confirmation Procedure

INFOID:0000000005284833

NOTE:
If DTC Confirmation Procedure has been previously conducted, always turn ignition switch OFF and wait at least 10 seconds before conducting the next test.

TESTING CONDITION:
- **Perform "DTC WORK SUPPORT" when the fuel level is between 1/4 and 3/4 full, and vehicle is placed on flat level surface.**
- **Always perform test at a temperature of 0 to 10°C (32 to 140°F).**
- **Open engine hood before conducting following procedure.**

WITH CONSULT-III

1. Turn ignition switch ON.
2. Turn ignition switch OFF and wait at least 10 seconds.
3. Turn ignition switch ON and select "DATA MONITOR" mode with CONSULT-III.
4. Check the following conditions are met.
   COOLAN TEMP/S: 0 - 100°C (32 - 212°F)
   INT/A TEMP SE: 0 - 60°C (32 - 140°F)
5. Select "EVAP SML LEAK P0442/P1442" of "EVAPORATIVE SYSTEM" in "DTC WORK SUPPORT" mode with CONSULT-III.
   Follow the instruction displayed.
   NOTE:
   If the engine speed cannot be maintained within the range displayed on the CONSULT-III screen, go to EC-93, "Basic Inspection".
6. Make sure that "OK" is displayed.
   If "NG" is displayed, refer to EC-341, "Diagnosis Procedure".

WITH GST

NOTE:
Be sure to read the explanation of Driving Pattern on EC-62, "Emission-related Diagnostic Information" before driving vehicle.

1. Start engine.
2. Drive vehicle according to Driving Pattern, EC-62, "Emission-related Diagnostic Information"
3. Stop vehicle.
4. Turn ignition switch OFF and wait at least 10 seconds and then turn ignition switch ON.
5. Select Service $07 with GST.

- If P0442 is displayed on the screen, go to EC-341, "Diagnosis Procedure".
- If P0441 is displayed on the screen, go to EC-336, "Diagnosis Procedure" for DTC P0441.

Diagnosis Procedure

INFOID:0000000005284834

1. CHECK FUEL FILLER CAP DESIGN

1. Turn ignition switch OFF.
2. Check for genuine NISSAN fuel filler cap design.

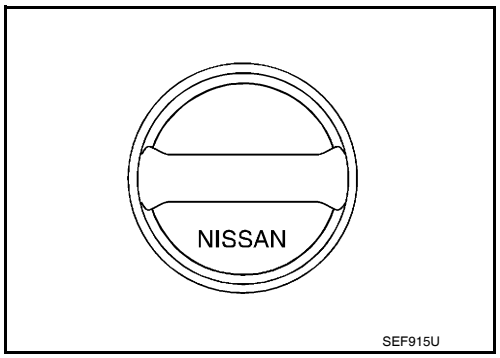

OK or NG

OK >> GO TO 2.
NG >> Replace with genuine NISSAN fuel filler cap.

2. CHECK FUEL FILLER CAP INSTALLATION

Check that the cap is tightened properly by rotating the cap clockwise.

OK or NG

OK >> GO TO 3.
NG >> 1. Open fuel filler cap, then clean cap and fuel filler neck threads using air blower.

2. Retighten until reteaching sound is heard.

3. CHECK FUEL FILLER CAP FUNCTION

Check for air releasing sound while opening the fuel filler cap.

OK or NG

OK >> GO TO 5.
NG >> GO TO 4.

4. CHECK FUEL TANK VACUUM RELIEF VALVE

Refer to EC-47, "Component Inspection".

OK or NG

OK >> GO TO 5.
NG >> Replace fuel filler cap with a genuine one.

5. INSTALL THE PRESSURE PUMP

To locate the EVAP leak, install EVAP service port adapter and pressure pump to EVAP service port securely.
For the location of EVAP service port (2), refer to EC-45, "Description".

- EVAP canister purge volume control solenoid valve (1)
- ⇦: Vehicle front

NOTE:
Improper installation of the EVAP service port adapter to the EVAP service port may cause leaking.

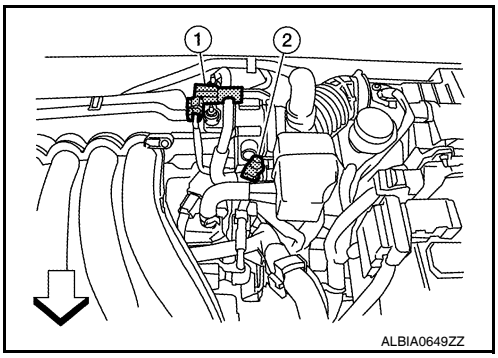

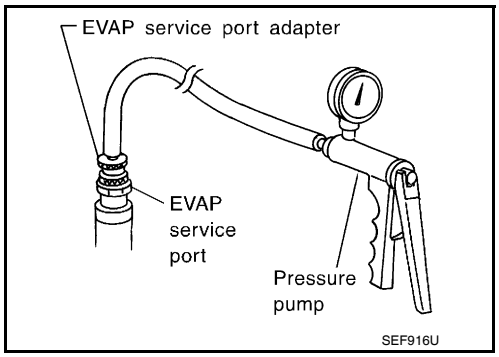

With CONSULT-III>>GO TO 6.
Without CONSULT-III>>GO TO 7.

6. CHECK FOR EVAP LEAK

With CONSULT-III

1. Turn ignition switch ON.
2. Select “EVAP SYSTEM CLOSE” of “WORK SUPPORT” mode with CONSULT-III.
3. Touch “START” and apply pressure into the EVAP line until the pressure indicator reaches the middle of the bar graph.
   CAUTION:
   - **Never use compressed air or a high pressure pump.**
   - **Do not exceed 4.12 kPa (0.042 kg/cm^2, 0.6 psi) of pressure in the system.**

4. Using EVAP leak detector, locate the EVAP leak. For the leak detector, refer to the instruction manual for more details. Refer to EC-45, "Description".

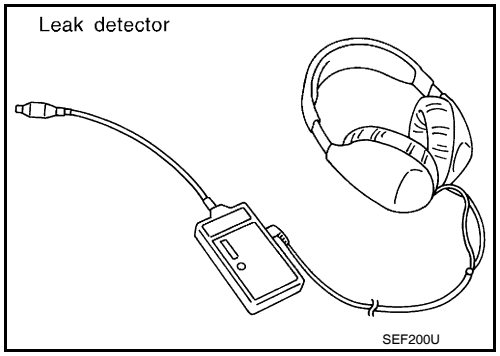

OK or NG

OK >> GO TO 8.
NG >> Repair or replace.

7. CHECK FOR EVAP LEAK

Without CONSULT-III

1. Turn ignition switch OFF.
2. Apply 12 volts DC to EVAP canister vent control valve. The valve will close. (Continue to apply 12 volts until the end of test.)
- This illustration is a view from under vehicle
- EVAP control system pressure sensor (1)
- EVAP canister (2)
- EVAP canister vent control valve (3)
3. Pressurize the EVAP line using pressure pump with 1.3 to 2.7 kPa (10 to 20 mmHg, 0.39 to 0.79 inHg), then remove pump and EVAP service port adapter.

CAUTION:
- **Never use compressed air or a high pressure pump.**
- **Do not exceed 4.12 kPa (0.042 kg/cm^2, 0.6 psi) of pressure in the system.**

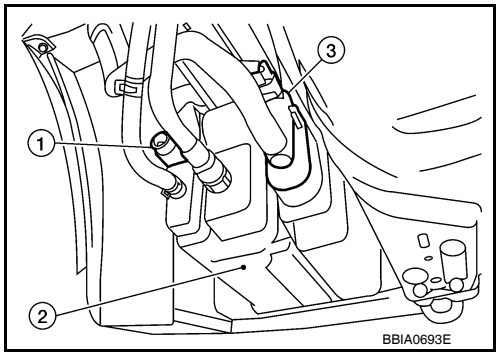

4. Using EVAP leak detector, locate the EVAP leak. For the leak detector, refer to the instruction manual for more details. Refer to EC-45, "Description".

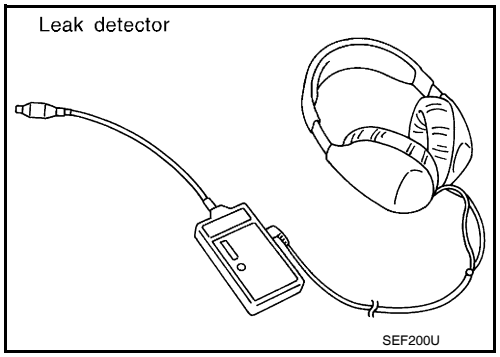

OK or NG

OK >> GO TO 8.
NG >> Repair or replace.

8. CHECK DRAIN FILTER

Refer to EC-346, "Component Inspection".

OK or NG

OK >> GO TO 9.
NG >> Replace drain filter.

9. CHECK EVAP CANISTER VENT CONTROL VALVE

Check the following,
- EVAP canister vent control valve is installed properly.
  Refer to EC-49, "Removal and Installation".
- EVAP canister vent control valve.
  Refer to EC-365, "Component Inspection".

OK or NG

OK >> GO TO 10.
NG >> Repair or replace EVAP canister vent control valve and O-ring.

10. CHECK IF EVAP CANISTER SATURATED WITH WATER

1. Remove EVAP canister with EVAP canister vent control valve and EVAP control system pressure sensor attached.
2. Does water drain from the EVAP canister?

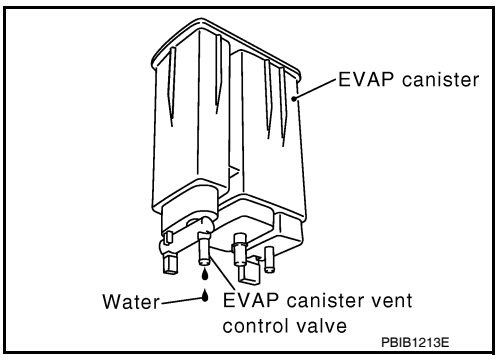

Yes or No

Yes >> GO TO 11.
No (With CONSULT-III)>>GO TO 13.
No (Without CONSULT-III)>>GO TO 14.

11. CHECK EVAP CANISTER

Weigh the EVAP canister with the EVAP canister vent control valve and EVAP control system pressure sensorattached.

The weight should be less than 1.9 kg (4.2 lb).

OK or NG

OK (With CONSULT-III)>>GO TO 13.
OK (Without CONSULT-III)>>GO TO 14.
NG >> GO TO 12.

12. DETECT MALFUNCTIONING PART

Check the following.
- EVAP canister for damage
- EVAP hose connected to EVAP canister for clogging or poor connection

>> Repair hose or replace EVAP canister.

13. CHECK EVAP CANISTER PURGE VOLUME CONTROL SOLENOID VALVE OPERATION

With CONSULT-III

1. Disconnect vacuum hose to EVAP canister purge volume control solenoid valve at EVAP service port.
2. Start engine.
3. Perform “PURG VOL CONT/V” in “ACTIVE TEST” mode.
4. Touch “Qu” on CONSULT-III screen to increase “PURG VOL CONT/V” opening to 100%.
5. Check vacuum hose for vacuum when revving engine up to 2,000 rpm.

Vacuum should exist.

OK or NG

OK >> GO TO 16.
NG >> GO TO 15.

14. CHECK EVAP CANISTER PURGE VOLUME CONTROL SOLENOID VALVE OPERATION

Without CONSULT-III

1. Start engine and warm it up to normal operating temperature.
2. Stop engine.
3. Disconnect vacuum hose to EVAP canister purge volume control solenoid valve at EVAP service port.
4. Start engine and let it idle for at least 80 seconds.
5. Check vacuum hose for vacuum when revving engine up to 2,000 rpm.

Vacuum should exist.

OK or NG

OK >> GO TO 17.
NG >> GO TO 15.

15. CHECK VACUUM HOSE

Check vacuum hoses for clogging or disconnection. Refer to EC-121, "Vacuum Hose Drawing".

OK or NG

OK >> GO TO 16.
NG >> Repair or reconnect the hose.

16. CHECK EVAP CANISTER PURGE VOLUME CONTROL SOLENOID VALVE

Refer to EC-360, "Component Inspection".

OK or NG

OK >> GO TO 17.
NG >> Replace EVAP canister purge volume control solenoid valve.

17. CHECK FUEL TANK TEMPERATURE SENSOR

Refer to EC-290, "Component Inspection".

OK or NG

OK >> GO TO 18.
NG >> Replace fuel level sensor unit.

18. CHECK EVAP CONTROL SYSTEM PRESSURE SENSOR

Refer to EC-382, "Component Inspection".

OK or NG

OK >> GO TO 19.
NG >> Replace EVAP control system pressure sensor.

19. CHECK EVAP PURGE LINE

Check EVAP purge line (pipe, rubber tube, fuel tank and EVAP canister) for cracks or improper connection. Refer to EC-45.

OK or NG

OK >> GO TO 20.
NG >> Repair or reconnect the hose.

20. CLEAN EVAP PURGE LINE

Clean EVAP purge line (pipe and rubber tube) using air blower.

>> GO TO 21.

21. CHECK EVAP/ORVR LINE

Check EVAP/ORVR line between EVAP canister and fuel tank for clogging, kink, looseness and improper connection. For location, refer to EC-52.

OK or NG

OK >> GO TO 22.
NG >> Repair or replace hoses and tubes.

22. CHECK RECIRCULATION LINE

Check recirculation line between filler neck tube and fuel tank for clogging, kink, cracks, looseness and improper connection.

OK or NG

OK >> GO TO 23.
NG >> Repair or replace hoses, tubes or filler neck tube.

23. CHECK REFUELING EVAP VAPOR CUT VALVE

Refer to EC-55, "Component Inspection".

OK or NG

OK >> GO TO 24.
NG >> Replace refueling EVAP vapor cut valve with fuel tank.

24. CHECK FUEL LEVEL SENSOR

Refer to FL-6.

OK or NG

OK >> GO TO 25.
NG >> Replace fuel level sensor unit.

25. CHECK INTERMITTENT INCIDENT

Refer to EC-152.

>> **INSPECTION END**

Component Inspection

INFOID:0000000005284835

DRAIN FILTER

1. Check visually for insect nests in the drain filter air inlet.
2. Check visually for cracks or flaws in the appearance.
3. Check visually for cracks or flaws in the hose.
4. Blow air into port A and check that it flows freely out of port B.
5. Block port B.
6. Blow air into port A and check that there is no leakage.
7. If NG, replace drain filter.

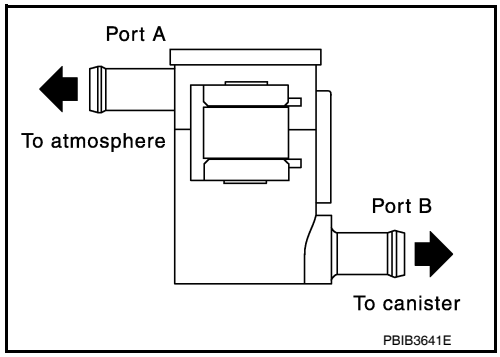

DTC P0443 EVAP CANISTER PURGE VOLUME CONTROL SOLENOID VALVE

Description

INFOID:0000000005284836

SYSTEM DESCRIPTION

Sensor	Input Signal to ECM	ECM function	Actuator
Crankshaft position sensor (POS) Camshaft position sensor (PHASE)	Engine speed*1	EVAP canister purge flow control	EVAP canister purge volume control solenoid valve
Mass air flow sensor	Amount of intake air		
Engine coolant temperature sensor	Engine coolant temperature		
Battery	Battery voltage*1		
Throttle position sensor	Throttle position		
Accelerator pedal position sensor	Accelerator pedal position		
Air fuel ratio (A/F) sensor 1	Density of oxygen in exhaust gas (Mixture ratio feedback signal)		
Fuel tank temperature sensor	Fuel temperature in fuel tank		
ABS actuator and electric unit (control unit)	Vehicle speed*2		
Combination meter			

*1: ECM determines the start signal status by the signals of engine speed and battery voltage.

*2: This signal is sent to the ECM though CAN communication line.

This system controls flow rate of fuel vapor from the EVAP canister. The opening of the vapor by-pass passage in the EVAP canister purge volume control solenoid valve changes to control the flow rate. The EVAP canister purge volume control solenoid valve repeats ON/OFF operation according to the signal sent from the ECM. The opening of the valve varies for optimum engine control. The optimum value stored in the ECM is determined by considering various engine conditions. When the engine is operating, the flow rate of fuel vapor from the EVAP canister is regulated as the air flow changes.

COMPONENT DESCRIPTION

The EVAP canister purge volume control solenoid valve uses a ON/OFF duty to control the flow rate of fuel vapor from the EVAP canister. The EVAP canister purge volume control solenoid valve is moved by ON/OFF pulses from the ECM. The longer the ON pulse, the greater the amount of fuel vapor that will flow through the valve.

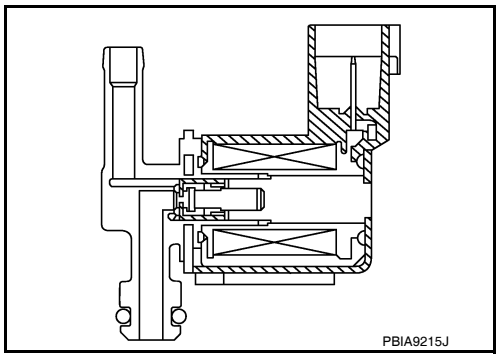

CONSULT-III Reference Value in Data Monitor Mode

INFOID:0000000005284837

Specification data are reference values.

Monitor item	Condition		Specification
PURG VOL C/V	• Engine: After warming up • Shift lever: P or N (CVT), Neutral (M/T) • Air conditioner switch: OFF • No load	Idle (Accelerator pedal is not depressed even slightly, after engine starting)	0%
		2,000 rpm	0 - 50%

On Board Diagnosis Logic

INFOID:0000000005284838

DTC No.	Trouble diagnosis name	DTC detecting condition		Possible cause
P0443 0443	EVAP canister purge volume control solenoid valve	A)	The canister purge flow is detected during the vehicle is stopped while the engine is running, even when EVAP canister purge volume control solenoid valve is completely closed.	• EVAP control system pressure sensor • EVAP canister purge volume control solenoid valve (EVAP canister purge volume control solenoid valve is stuck open.) • EVAP canister vent control valve • Drain filter • EVAP canister • Hoses (Hoses are connected incorrectly or clogged.)
		B)	The canister purge flow is detected during the specified driving conditions, even when EVAP canister purge volume control solenoid valve is completely closed.	

DTC Confirmation Procedure

INFOID:0000000005284839

Perform PROCEDURE FOR MALFUNCTION A first.
If the DTC cannot be confirmed, perform PROCEDURE FOR MALFUNCTION B.
NOTE:
If DTC Confirmation Procedure has been previously conducted, always turn ignition switch OFF and wait at least 10 seconds before conducting the next test.

PROCEDURE FOR MALFUNCTION A

TESTING CONDITION:
- Perform "DTC Confirmation Procedure" when the fuel level is between 1/4 and 3/4 full, and vehicle is placed on flat level surface.
- Always perform test at a temperature of 5 to 60°C (41 to 140°F).
- Cool the vehicle so that engine coolant temperature becomes same level as ambient temperature.

WITH CONSULT-III

1. Turn ignition switch ON and select "DATA MONITOR" mode with CONSULT-III.
2. Check that the following condition are met.
   FUEL T/TMP SE: 0 – 35°C (32 – 95°F)
3. Start engine and wait at least 60 seconds.
4. Check 1st trip DTC.
5. If 1st trip DTC is detected, go to EC-351, "Diagnosis Procedure".

WITH GST

1. Turn ignition switch ON.
2. Set voltmeter probes to ECM terminal 43 (FTT sensor signal) and ground.
3. Check that the voltage is 3.1 – 4.2 V.
4. Start engine and wait at least 60 seconds.
5. Check 1st trip DTC.
6. If 1st trip DTC is detected, go to EC-351, "Diagnosis Procedure".

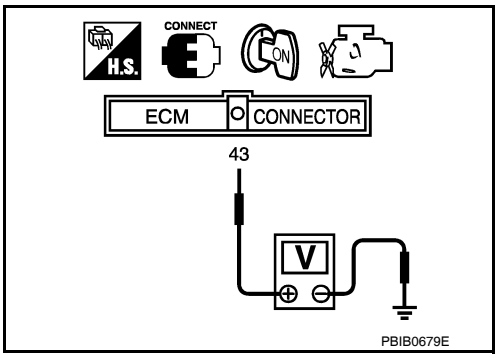

PROCEDURE FOR MALFUNCTION B

NOTE:
If DTC Confirmation Procedure has been previously conducted, always turn ignition switch OFF and wait at least 10 seconds before conducting the next test.
TESTING CONDITION:
Always perform test at a temperature of 5°C (41°F) or more.

WITH CONSULT-III

1. Start engine and warm it up to normal operating temperature.
2. Turn ignition switch OFF and wait at least 10 seconds.
3. Turn ignition switch ON.
4. Select “PURG VOL CN/V P1444” of “EVAPORATIVE SYSTEM” in “DTC WORK SUPPORT” mode with CONSULT-III.
5. Touch “START”.
6. Start engine and let it idle until “TESTING” on CONSULT-III changes to “COMPLETED”. (It will take approximately 10 seconds.)
   If “TESTING” is not displayed after 5 minutes, retry from step 2.
7. Make sure that “OK” is displayed after touching “SELF-DIAG RESULTS”. If “NG” is displayed, refer to EC-351, "Diagnosis Procedure".

WITH GST

1. Start engine and warm it up to normal operating temperature.
2. Turn ignition switch OFF and wait at least 10 seconds.
3. Start engine and let it idle for at least 20 seconds.
4. Select Service $07 with GST.
5. If 1st trip DTC is detected, go to EC-351, "Diagnosis Procedure".

Wiring Diagram

INFOID:0000000005284840

EC-PGC/V-01

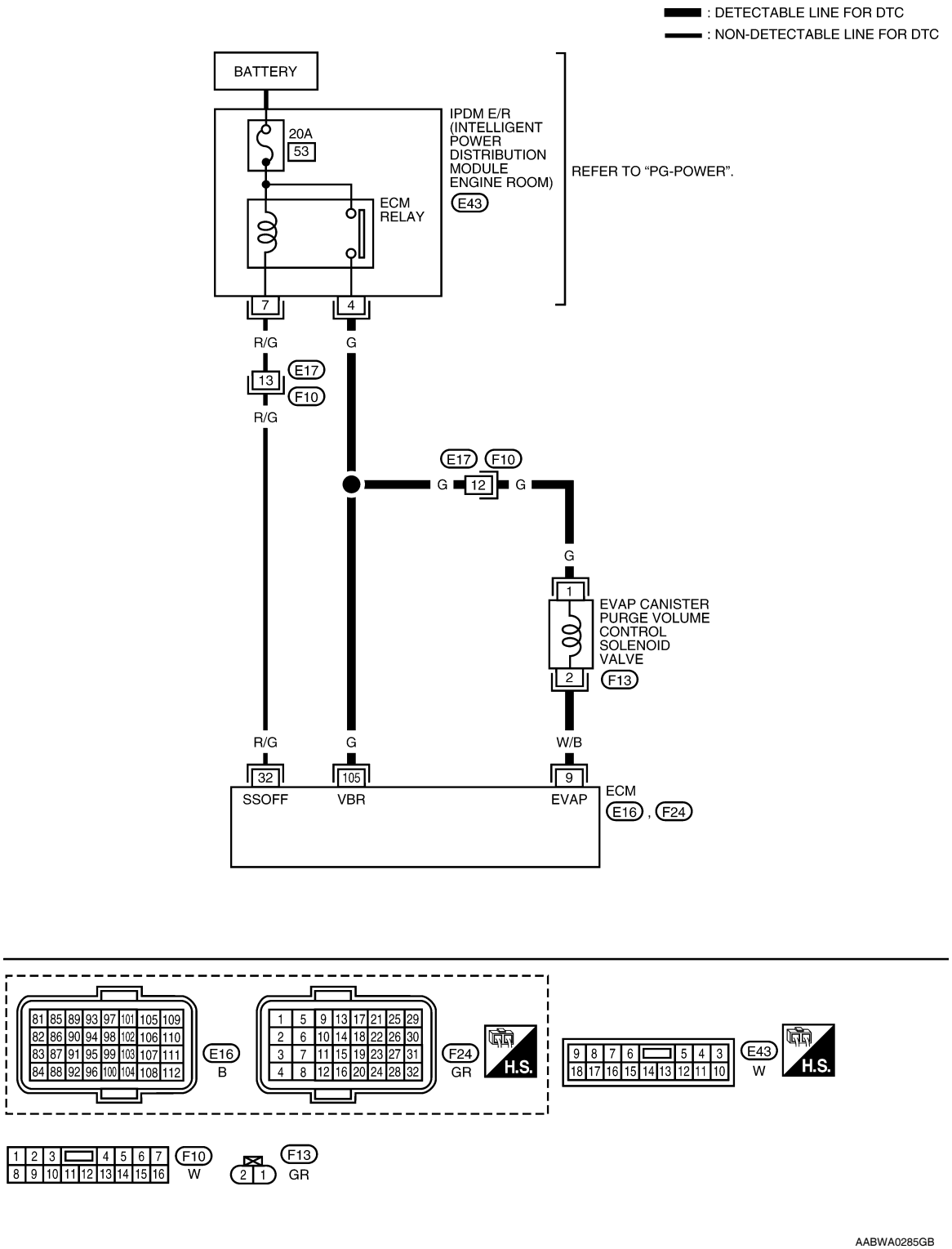

Specification data are reference values and are measured between each terminal and ground.
Pulse signal is measured by CONSULT-III.

CAUTION:

Do not use ECM ground terminals when measuring input/output voltage. Doing so may result in damage to the ECM's transistor. Use a ground other than ECM terminals, such as the ground.

TERMINAL NO.	WIRE COLOR	ITEM	CONDITION	DATA (DC Voltage)
9	W/B	EVAP canister purge volume control solenoid valve	**[Engine is running]** • Idle speed • Accelerator pedal: Not depressed even slightly, after engine starting.	BATTERY VOLTAGE (11 - 14 V)★ 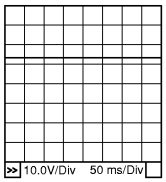 PBIB0050E
			[Engine is running] • Engine speed: About 2,000 rpm (More than 100 seconds after starting engine)	Approximately 10 V★ 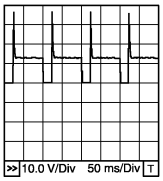 PBIB0520E
32	R/G	ECM relay (Self shut-off)	**[Engine is running]** **[Ignition switch: OFF]** • For a few seconds after turning ignition switch OFF	0 - 1.0 V
			[Ignition switch: OFF] • More than a few seconds after turning ignition switch OFF	BATTERY VOLTAGE (11 - 14 V)
105	G	Power supply for ECM	**[Ignition switch: ON]**	BATTERY VOLTAGE (11 - 14 V)

★: Average voltage for pulse signal (Actual pulse signal can be confirmed by oscilloscope.)

Diagnosis Procedure

INFOID:0000000005284841

1. CHECK EVAP CANISTER PURGE VOLUME CONTROL SOLENOID VALVE POWER SUPPLY CIRCUIT

1. Turn ignition switch OFF.
2. Disconnect EVAP canister purge volume control solenoid valve (1) harness connector.
- EVAP service port (2)
- ⇦: Vehicle front
3. Turn ignition switch ON.

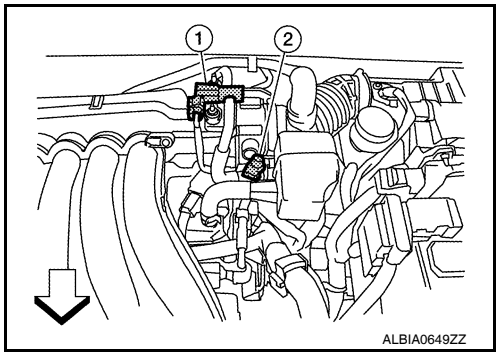

4. Check voltage between EVAP canister purge volume control solenoid valve terminal 1 and ground with CONSULT-III or tester.

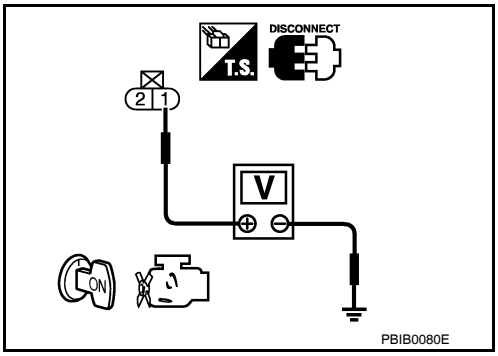

Voltage: Battery voltage

OK or NG

OK >> GO TO 3.
NG >> GO TO 2.

2. DETECT MALFUNCTIONING PART

Check the following.
- Harness connectors E17, F10
- Harness for open or short between EVAP canister purge volume control solenoid valve and IPDM E/R
- Harness for open or short between EVAP canister purge volume control solenoid valve and ECM

>> Repair open circuit or short to ground or short to power in harness or connectors.

3. CHECK EVAP CANISTER PURGE VOLUME CONTROL SOLENOID VALVE OUTPUT SIGNAL CIRCUIT FOR OPEN AND SHORT

1. Turn ignition switch OFF.
2. Disconnect ECM harness connector.
3. Check harness continuity between ECM terminal 9 and EVAP canister purge volume control solenoid valve terminal 2. Refer to Wiring Diagram.

Continuity should exist.

4. Also check harness for short to ground and short to power.

OK or NG

OK >> GO TO 4.
NG >> Repair open circuit or short to ground or short to power in harness or connectors.

4. CHECK EVAP CONTROL SYSTEM PRESSURE SENSOR CONNECTOR

1. Disconnect EVAP control system pressure sensor harness connector.
- This illustration is a view from under vehicle
- EVAP control system pressure sensor (1)
- EVAP canister (2)
- EVAP canister vent control valve (3)
2. Check connectors for water.

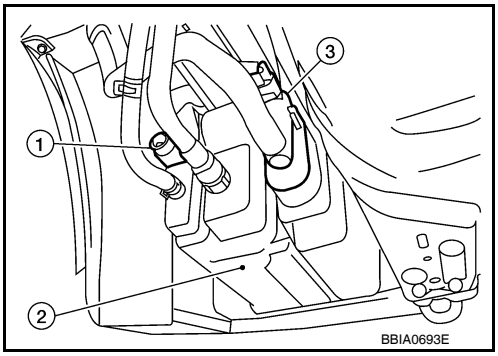

Water should not exist.

OK or NG

OK >> GO TO 5.
NG >> Replace EVAP control system pressure sensor.

5. CHECK EVAP CONTROL SYSTEM PRESSURE SENSOR

Refer to EC-382, "Component Inspection".

OK or NG

OK (With CONSULT-III)>>GO TO 6.
OK (Without CONSULT-III)>>GO TO 7.
NG >> Replace EVAP control system pressure sensor.

6. CHECK EVAP CANISTER PURGE VOLUME CONTROL SOLENOID VALVE

With CONSULT-III

1. Turn ignition switch OFF.

2. Reconnect harness connectors disconnected.
3. Start engine.
4. Perform “PURG VOL CONT/V” in “ACTIVE TEST” mode with CONSULT-III. Check that engine speed varies according to the valve opening.

OK or NG

OK >> GO TO 8.
NG >> GO TO 7.

7. CHECK EVAP CANISTER PURGE VOLUME CONTROL SOLENOID VALVE

Refer to EC-354, "Component Inspection".

OK or NG

OK >> GO TO 8.
NG >> Replace EVAP canister purge volume control solenoid valve.

8. CHECK RUBBER TUBE FOR CLOGGING

1. Disconnect rubber tube connected to EVAP canister vent control valve.
2. Check the rubber tube for clogging.

OK or NG

OK >> GO TO 9.
NG >> Clean the rubber tube using an air blower.

9. CHECK DRAIN FILTER

Refer to EC-339, "Component Inspection".

OK or NG

OK >> GO TO 10.
NG >> Replace drain filter.

10. CHECK EVAP CANISTER VENT CONTROL VALVE

Refer to EC-365, "Component Inspection".

OK or NG

OK >> GO TO 11.
NG >> Replace EVAP canister vent control valve.

11. CHECK IF EVAP CANISTER SATURATED WITH WATER

1. Remove EVAP canister with EVAP canister vent control valve attached.
2. Does water drain from the EVAP canister?

YES or NO

YES >> GO TO 12.
NO >> GO TO 14.

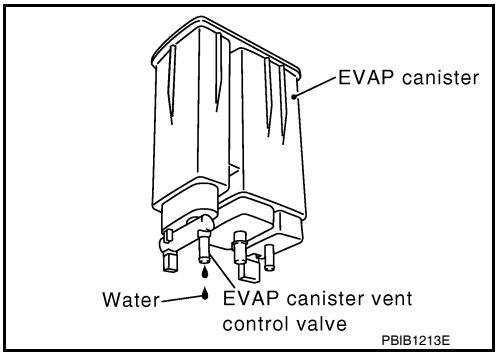

12. CHECK EVAP CANISTER

Weigh the EVAP canister with the EVAP canister vent control valve and EVAP control system pressure sensor attached.

The weight should be less than 1.9 kg (4.2 lb).

OK or NG

OK >> GO TO 14.
NG >> GO TO 13.

13. DETECT MALFUNCTIONING PART

Check the following.
- EVAP canister for damage
- EVAP hose between EVAP canister and vehicle frame for clogging or poor connection

>> Repair hose or replace EVAP canister.

14. CHECK INTERMITTENT INCIDENT

Refer to EC-152.

>> **INSPECTION END**

Component Inspection

INFOID:0000000005284842

EVAP CANISTER PURGE VOLUME CONTROL SOLENOID VALVE

WITH CONSULT-III

Check air passage continuity of EVAP canister purge volume control solenoid valve under the following conditions.

Condition (PURG VOL CONT/V value)	Air passage continuity between A and B
100%	Yes
0%	No

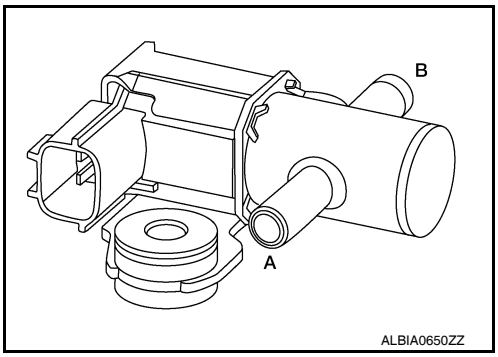

WITHOUT CONSULT-III

Check air passage continuity of EVAP canister purge volume control solenoid valve under the following conditions.

Condition	Air passage continuity between A and B
12 V direct current supply between terminals 1 and 2	Yes
No supply	No

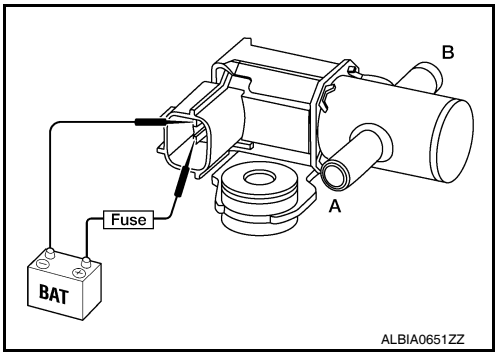

Removal and Installation

INFOID:0000000005284843

EVAP CANISTER PURGE VOLUME CONTROL SOLENOID VALVE

Refer to EM-18.

DTC P0444, P0445 EVAP CANISTER PURGE VOLUME CONTROL SOLENOID VALVE

Description

INFOID:0000000005284844

SYSTEM DESCRIPTION

Sensor	Input Signal to ECM	ECM function	Actuator
Crankshaft position sensor (POS) Camshaft position sensor (PHASE)	Engine speed*1	EVAP canister purge flow control	EVAP canister purge volume control solenoid valve
Mass air flow sensor	Amount of intake air		
Engine coolant temperature sensor	Engine coolant temperature		
Battery	Battery voltage*1		
Throttle position sensor	Throttle position		
Accelerator pedal position sensor	Accelerator pedal position		
Air fuel ratio (A/F) sensor 1	Density of oxygen in exhaust gas (Mixture ratio feedback signal)		
Fuel tank temperature sensor	Fuel temperature in fuel tank		
ABS actuator and electric unit (control unit)	Vehicle speed*2		
Combination meter			

*1: The ECM determines the start signal status by the signal of engine speed and battery voltage.

*2: This signal is sent to the ECM through CAN communication line.

This system controls flow rate of fuel vapor from the EVAP canister. The opening of the vapor by-pass passage in the EVAP canister purge volume control solenoid valve changes to control the flow rate. The EVAP canister purge volume control solenoid valve repeats ON/OFF operation according to the signal sent from the ECM. The opening of the valve varies for optimum engine control. The optimum value stored in the ECM is determined by considering various engine conditions. When the engine is operating, the flow rate of fuel vapor from the EVAP canister is regulated as the air flow changes.

COMPONENT DESCRIPTION

The EVAP canister purge volume control solenoid valve uses a ON/OFF duty to control the flow rate of fuel vapor from the EVAP canister. The EVAP canister purge volume control solenoid valve is moved by ON/OFF pulses from the ECM. The longer the ON pulse, the greater the amount of fuel vapor that will flow through the valve.

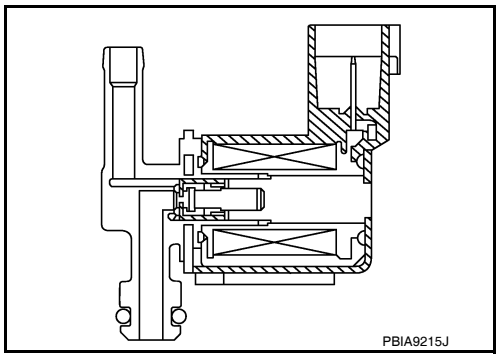

CONSULT-III Reference Value in Data Monitor Mode

INFOID:0000000005284845

Specification data are reference values.

Monitor item	Condition		Specification
PURG VOL C/V	• Engine: After warming up • Shift lever: N (CVT), Neutral (M/T) • Air conditioner switch: OFF • No load	Idle (Accelerator pedal is not depressed even slightly, after engine starting)	0%
		2,000 rpm	0 - 50%

On Board Diagnosis Logic

INFOID:0000000005284846

DTC No.	Trouble diagnosis name	DTC detecting condition	Possible cause
P0444 0444	EVAP canister purge volume control solenoid valve circuit open	An excessively low voltage signal is sent to ECM through the valve	• Harness or connectors (EVAP canister purge volume control solenoid valve circuit is open or shorted.) • EVAP canister purge volume control solenoid valve
P0445 0445	EVAP canister purge volume control solenoid valve circuit shorted	An excessively high voltage signal is sent to ECM through the valve	• Harness or connectors (EVAP canister purge volume control solenoid valve circuit is shorted.) • EVAP canister purge volume control solenoid valve

DTC Confirmation Procedure

INFOID:0000000005284847

NOTE:
If DTC Confirmation Procedure has been previously conducted, always turn ignition switch OFF and wait at least 10 seconds before conducting the next test.
TESTING CONDITION:
Before performing the following procedure, confirm battery voltage is more than 11 V at idle.
1. Start engine and let it idle for at least 13 seconds.
2. Check 1st trip DTC.
3. If 1st trip DTC is detected, go to EC-358, "Diagnosis Procedure".

Wiring Diagram

INFOID:0000000005284848

EC-PGC/V-01

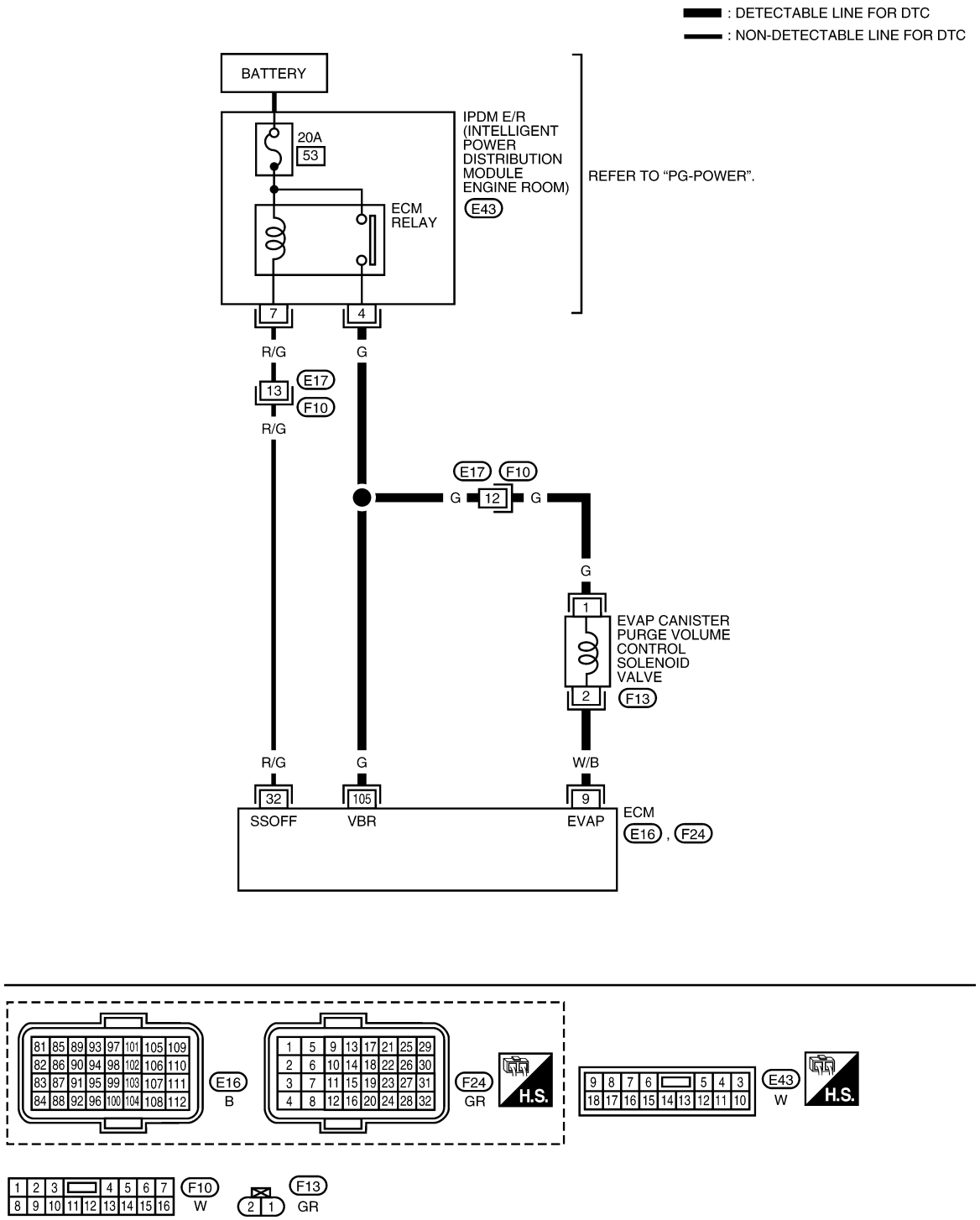

Specification data are reference values and are measured between each terminal and ground.
Pulse signal is measured by CONSULT-III.

CAUTION:

Do not use ECM ground terminals when measuring input/output voltage. Doing so may result in damage to the ECM's transistor. Use a ground other than ECM terminals, such as the ground.

TERMINAL NO.	WIRE COLOR	ITEM	CONDITION	DATA (DC Voltage)
9	W/B	EVAP canister purge volume control solenoid valve	**[Engine is running]** • Idle speed • Accelerator pedal: Not depressed even slightly, after engine starting.	BATTERY VOLTAGE (11 - 14 V)★ 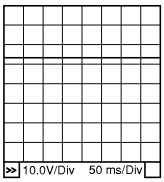 PBIB0050E
			[Engine is running] • Engine speed: About 2,000 rpm (More than 100 seconds after starting engine)	Approximately 10 V★ 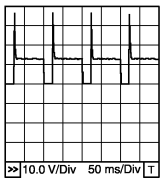 PBIB0520E
32	R/G	ECM relay (Self shut-off)	**[Engine is running]** **[Ignition switch: OFF]** • For a few seconds after turning ignition switch OFF	0 - 1.0 V
			[Ignition switch: OFF] • More than a few seconds after turning ignition switch OFF	BATTERY VOLTAGE (11 - 14 V)
105	G	Power supply for ECM	**[Ignition switch: ON]**	BATTERY VOLTAGE (11 - 14 V)

★: Average voltage for pulse signal (Actual pulse signal can be confirmed by oscilloscope.)

Diagnosis Procedure

INFOID:0000000005284849

1. CHECK EVAP CANISTER PURGE VOLUME CONTROL SOLENOID VALVE POWER SUPPLY CIRCUIT

1. Turn ignition switch OFF.
2. Disconnect EVAP canister purge volume control solenoid valve (1) harness connector.
- EVAP canister port (2)
- ⇦: Vehicle front
3. Turn ignition switch ON.

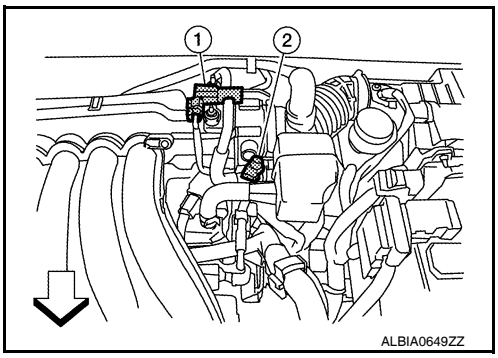

4. Check voltage between EVAP canister purge volume control solenoid valve terminal 1 and ground with CONSULT-III or tester.

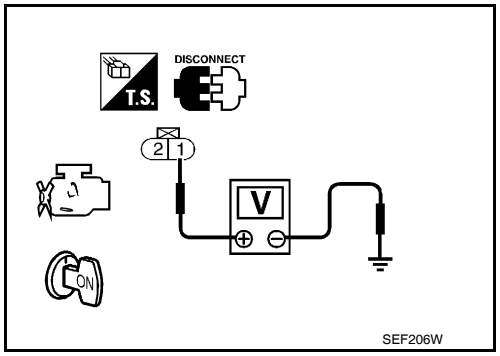

Voltage: Battery voltage

OK or NG

OK >> GO TO 3.
NG >> GO TO 2.

2. DETECT MALFUNCTIONING PART

Check the following.
- Harness connectors E17, F10
- Harness for open or short between EVAP canister purge volume control solenoid valve and IPDM E/R
- Harness for open or short between EVAP canister purge volume control solenoid valve and ECM

>> Repair open circuit or short to ground or short to power in harness or connectors.

3. CHECK EVAP CANISTER PURGE VOLUME CONTROL SOLENOID VALVE OUTPUT SIGNAL CIRCUIT FOR OPEN AND SHORT

1. Turn ignition switch OFF.
2. Disconnect ECM harness connector.
3. Check harness continuity between ECM terminal 9 and EVAP canister purge volume control solenoid valve terminal 2. Refer to Wiring Diagram.

Continuity should exist.

4. Also check harness for short to ground and short to power.

OK or NG

OK (With CONSULT-III)>>GO TO 4.
OK (Without CONSULT-III)>>GO TO 5.
NG >> Repair open circuit or short to ground or short to power in harness or connectors.

4. CHECK EVAP CANISTER PURGE VOLUME CONTROL SOLENOID VALVE OPERATION

With CONSULT-III

1. Reconnect all harness connectors disconnected.
2. Start engine.
3. Perform “PURG VOL CONT/V” in “ACTIVE TEST” mode with CONSULT-III. Check that engine speed varies according to the valve opening.

OK or NG

OK >> GO TO 6.
NG >> GO TO 5.

5. CHECK EVAP CANISTER PURGE VOLUME CONTROL SOLENOID VALVE

Refer to EC-360, "Component Inspection".

OK or NG

OK >> GO TO 6.
NG >> Replace EVAP canister purge volume control solenoid valve.

6. CHECK INTERMITTENT INCIDENT

Refer to EC-152.

>> **INSPECTION END**

Component Inspection

INFOID:0000000005284850

EVAP CANISTER PURGE VOLUME CONTROL SOLENOID VALVE

WITH CONSULT-III

Check air passage continuity of EVAP canister purge volume control solenoid valve under the following conditions.

Condition (PURG VOL CONT/V value)	Air passage continuity between A and B
100%	Yes
0%	No

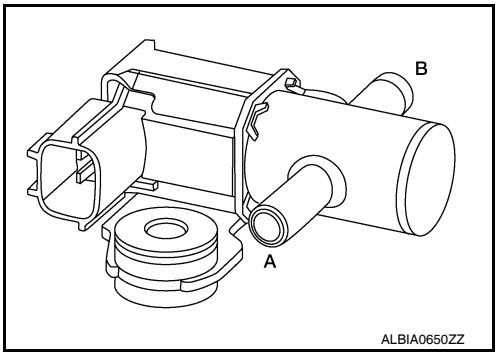

WITHOUT CONSULT-III

Check air passage continuity of EVAP canister purge volume control solenoid valve under the following conditions.

Condition	Air passage continuity between A and B
12 V direct current supply between terminals 1 and 2	Yes
No supply	No

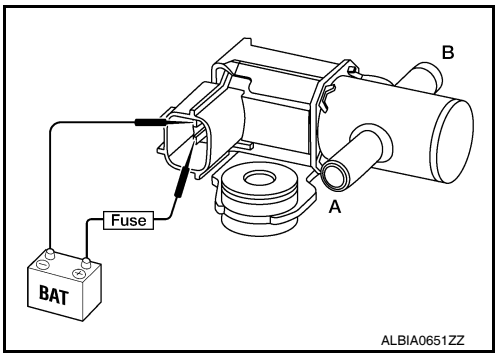

Removal and Installation

INFOID:0000000005284851

EVAP CANISTER PURGE VOLUME CONTROL SOLENOID VALVE

Refer to EM-18.

DTC P0447 EVAP CANISTER VENT CONTROL VALVE

Component Description

INFOID:0000000005284852

The EVAP canister vent control valve (3) is located on the EVAP canister (2) and is used to seal the canister vent.
This solenoid valve responds to signals from the ECM. When the ECM sends an ON signal, the coil in the solenoid valve is energized. A plunger will then move to seal the canister vent. The ability to seal the vent is necessary for the on board diagnosis of other evaporative emission control system components.
This solenoid valve is used only for diagnosis, and usually remains opened.
When the vent is closed, under normal purge conditions, the evaporative emission control system is depressurized and allows EVAP control system diagnoses.

- This illustration is a view from under vehicle
- EVAP control system pressure sensor (1)

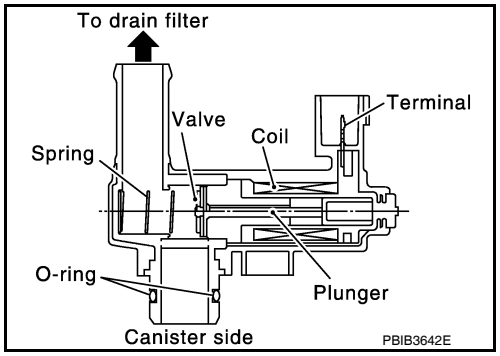

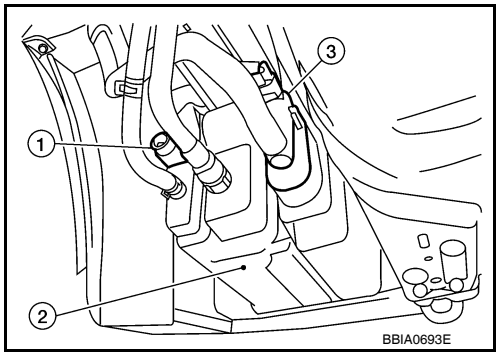

CONSULT-III Reference Value in Data Monitor Mode

INFOID:0000000005284853

Specification data are reference values.

Monitor item	Condition	Specification
VENT CONT/V	• Ignition switch: ON	OFF

On Board Diagnosis Logic

INFOID:0000000005284854

DTC No.	Trouble diagnosis name	DTC detecting condition	Possible cause
P0447 0447	EVAP canister vent control valve circuit open	An improper voltage signal is sent to ECM through EVAP canister vent control valve.	• Harness or connectors (EVAP canister vent control valve circuit is open or shorted.) • EVAP canister vent control valve • Drain filter

DTC Confirmation Procedure

INFOID:0000000005284855

NOTE:
If DTC Confirmation Procedure has been previously conducted, always turn ignition switch OFF and wait at least 10 seconds before conducting the next test.
TESTING CONDITION:
Before performing the following procedure, confirm battery voltage is more than 11 V at idle.

1. Start engine and wait at least 8 seconds.
2. Check 1st trip DTC.
3. If 1st trip DTC is detected, go to EC-363, "Diagnosis Procedure".

Wiring Diagram

INFOID:0000000005284856

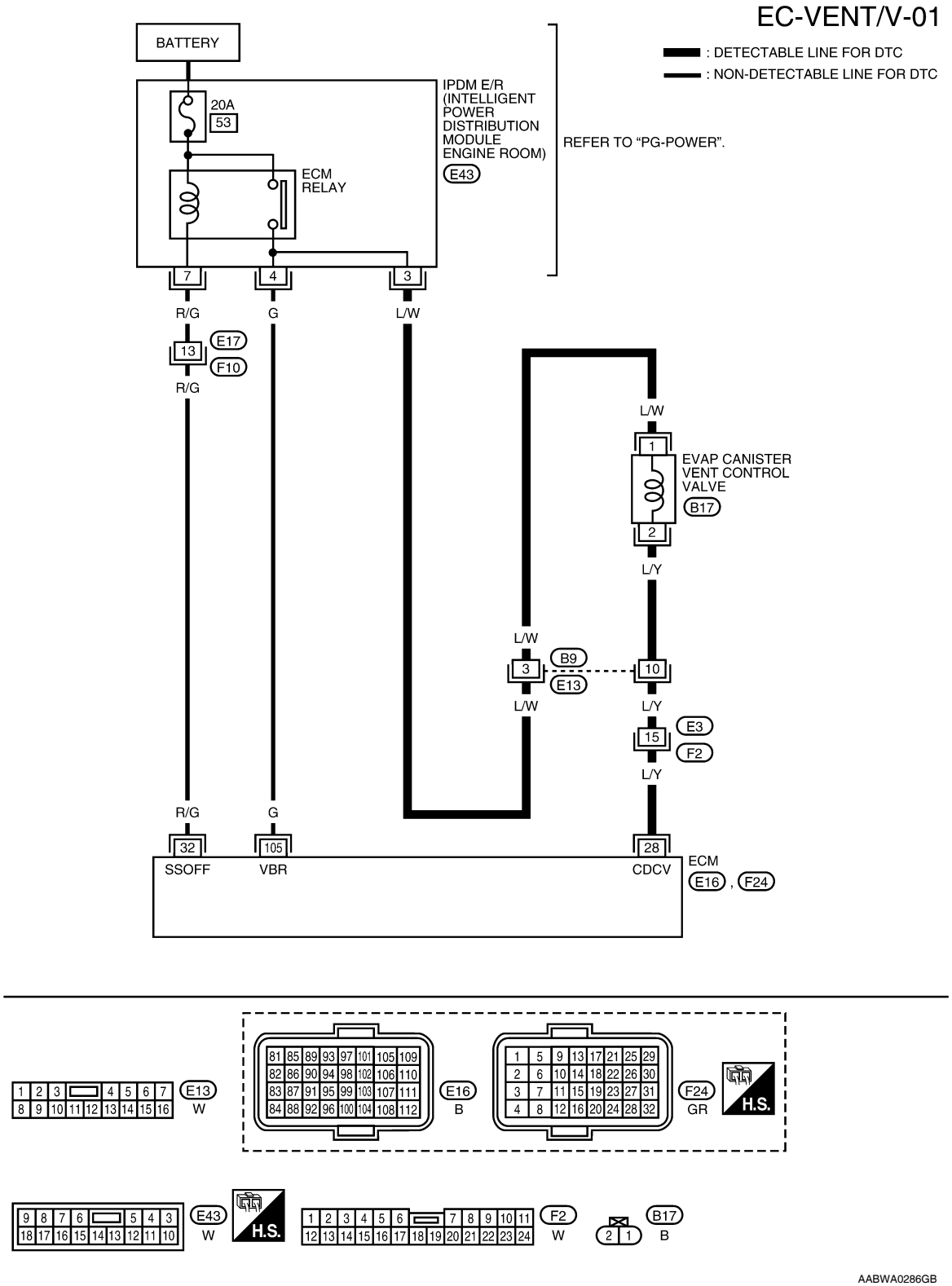

Specification data are reference values and are measured between each terminal and ground.

CAUTION:

Do not use ECM ground terminals when measuring input/output voltage. Doing so may result in damage to the ECM's transistor. Use a ground other than ECM terminals, such as the ground.

TERMINAL NO.	WIRE COLOR	ITEM	CONDITION	DATA (DC Voltage)
28	L/Y	EVAP canister vent control valve	**[Ignition switch: ON]**	BATTERY VOLTAGE (11 - 14 V)
32	R/G	ECM relay (Self shut-off)	**[Engine is running]** **[Ignition switch: OFF]** • For a few seconds after turning ignition switch OFF	0 - 1.0 V
			[Ignition switch: OFF] • More than a few seconds after turning ignition switch OFF	BATTERY VOLTAGE (11 - 14 V)
105	G	Power supply for ECM	**[Ignition switch: ON]**	BATTERY VOLTAGE (11 - 14 V)

Diagnosis Procedure

INFOID:0000000005284857

1. INSPECTION START

1. Do you have CONSULT-III?

Yes or No

Yes >> GO TO 2.
No >> GO TO 3.

2. CHECK EVAP CANISTER VENT CONTROL VALVE CIRCUIT

With CONSULT-III

1. Turn ignition switch OFF and then turn ON.
2. Select “VENT CONTROL/V” in “ACTIVE TEST” mode with CONSULT-III.
3. Touch “ON/OFF” on CONSULT-III screen.
4. Check for operating sound of the valve.

Clicking noise should be heard.

OK or NG

OK >> GO TO 8.
NG >> GO TO 3.

3. CHECK EVAP CANISTER VENT CONTROL VALVE POWER SUPPLY CIRCUIT

1. Turn ignition switch OFF.
2. Disconnect EVAP canister vent control valve (3) harness connector.
- This illustration is a view from under vehicle
- EVAP control system pressure sensor (1)
- EVAP canister (2)
3. Turn ignition switch ON.

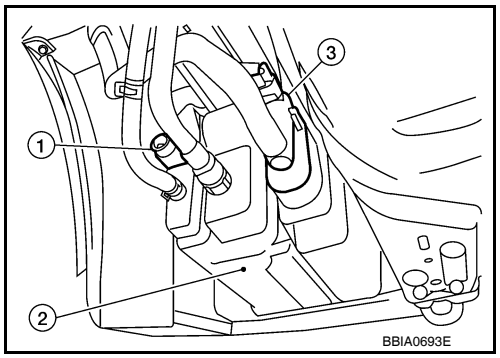

4. Check voltage between EVAP canister vent control valve terminal 1 and ground with CONSULT-III or tester.

Voltage: Battery voltage

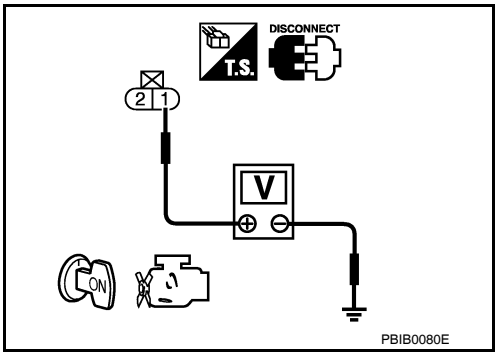

OK or NG

OK >> GO TO 5.
NG >> GO TO 4.

4. DETECT MALFUNCTIONING PART

Check the following.
- Harness connectors B9, E13
- Harness for open or short between EVAP canister vent control valve and IPDM E/R

>> Repair open circuit or short to ground or short to power in harness or connectors.

5. CHECK EVAP CANISTER VENT CONTROL VALVE OUTPUT SIGNAL CIRCUIT FOR OPEN AND SHORT

1. Turn ignition switch OFF.
2. Disconnect ECM harness connector.
3. Check harness continuity between ECM terminal 28 and EVAP canister vent control valve terminal 2. Refer to Wiring Diagram.

Continuity should exist.

4. Also check harness for short to ground and short to power.

OK or NG

OK >> GO TO 7.
NG >> GO TO 6.

6. DETECT MALFUNCTIONING PART

Check the following.
- Harness connectors E3, F2
- Harness for open or short between EVAP canister vent control valve and ECM

>> Repair open circuit or short to ground or short to power in harness or connectors.

7. CHECK RUBBER TUBE FOR CLOGGING

1. Disconnect rubber tube connected to EVAP canister vent control valve.
2. Check the rubber tube for clogging.

OK or NG

OK >> GO TO 8.
NG >> Clean the rubber tube using an air blower.

8. CHECK DRAIN FILTER

Refer to EC-339, "Component Inspection".

OK or NG

OK >> GO TO 9.
NG >> Replace drain filter.

9. CHECK EVAP CANISTER VENT CONTROL VALVE

Refer to EC-365, "Component Inspection".

OK or NG

OK >> GO TO 10.
NG >> Replace EVAP canister vent control valve.

10. CHECK INTERMITTENT INCIDENT

Refer to EC-152.

>> **INSPECTION END**

Component Inspection

INFOID:0000000005284858

EVAP CANISTER VENT CONTROL VALVE

WITH CONSULT-III

1. Remove EVAP canister vent control valve from EVAP canister.
2. Check portion **B** of EVAP canister vent control valve for being rusted.
   If NG, replace EVAP canister vent control valve.
   If OK, go to next step.
3. Reconnect harness connectors disconnected.
4. Turn ignition switch ON.

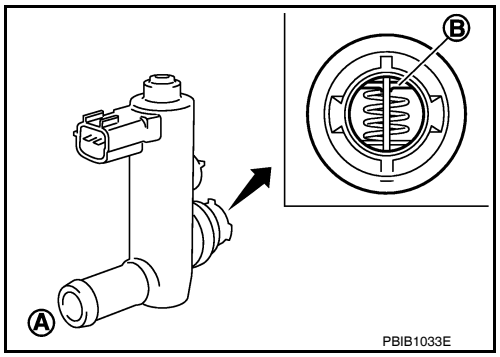

5. Perform “VENT CONTROL/V” in “ACTIVE TEST” mode.
6. Check air passage continuity and operation delay time.
   Make sure new O-ring is installed properly.

Condition VENT CONTROL/V	Air passage continuity between A and B
ON	No
OFF	Yes

Operation takes less than 1 second.
If NG, go to next step.

7. Clean the air passage (Portion **A** to **B**) of EVAP canister vent control valve using an air blower.
8. Perform step 6 again.
   If NG, replace EVAP canister vent control valve.

WITHOUT CONSULT-III

1. Remove EVAP canister vent control valve from EVAP canister.
2. Check portion **B** of EVAP canister vent control valve for being rusted.

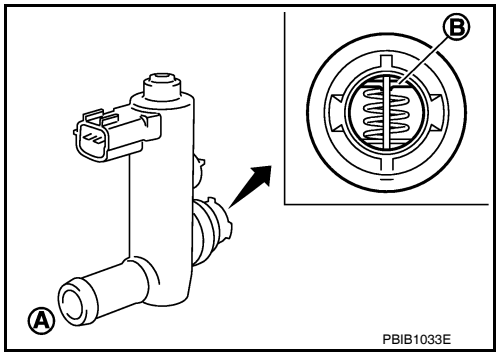

3. Check air passage continuity and operation delay time under the following conditions.
   Make sure new O-ring is installed properly.

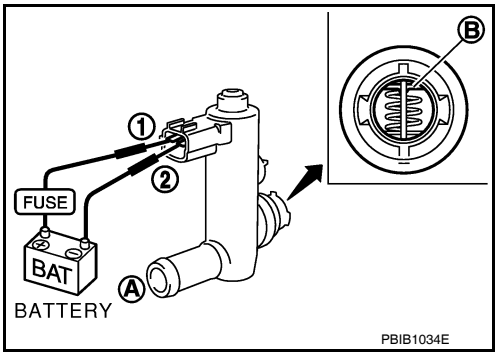

Condition	Air passage continuity between A and B
12 V direct current supply between terminals 1 and 2	No
OFF	Yes

   Operation takes less than 1 second.
   If NG, go to next step.
4. Clean the air passage (Portion **A** to **B**) of EVAP canister vent control valve using an air blower.
5. Perform step 3 again.
   If NG, replace EVAP canister vent control valve.

DTC P0448 EVAP CANISTER VENT CONTROL VALVE

Component Description

INFOID:0000000005284859

The EVAP canister vent control valve (3) is located on the EVAP canister (2) and is used to seal the canister vent.
This solenoid valve responds to signals from the ECM. When the ECM sends an ON signal, the coil in the solenoid valve is energized. A plunger will then move to seal the canister vent. The ability to seal the vent is necessary for the on board diagnosis of other evaporative emission control system components.
This solenoid valve is used only for diagnosis, and usually remains opened.
When the vent is closed, under normal purge conditions, the evaporative emission control system is depressurized and allows EVAP control system diagnoses.
- This illustration is a view from under vehicle
- EVAP control system pressure sensor (1)

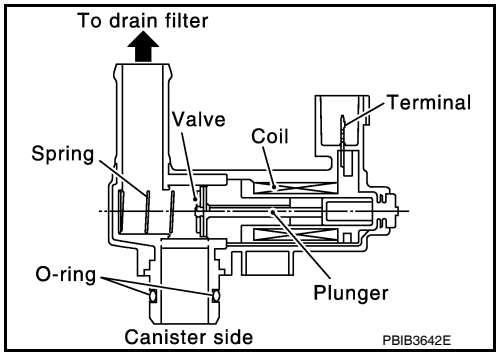

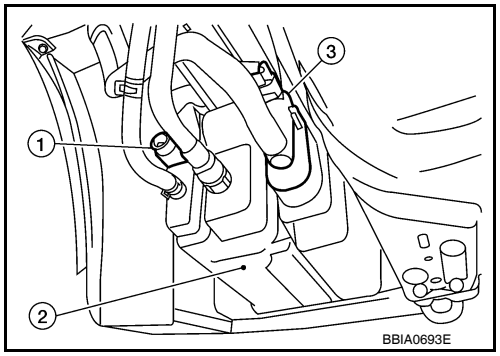

CONSULT-III Reference Value in Data Monitor Mode

INFOID:0000000005284860

Specification data are reference values.

Monitor item	Condition	Specification
VENT CONT/V	• Ignition switch: ON	OFF

On Board Diagnosis Logic

INFOID:0000000005284861

DTC No.	Trouble diagnosis name	DTC detecting condition	Possible cause
P0448 0448	EVAP canister vent control valve close	EVAP canister vent control valve remains closed under specified driving conditions.	• EVAP canister vent control valve • EVAP control system pressure sensor and the circuit • Blocked rubber tube to EVAP canister vent control valve • EVAP canister is saturated with water • Drain filter

DTC Confirmation Procedure

INFOID:0000000005284862

CAUTION:
Always drive vehicle at a safe speed.
NOTE:
If DTC Confirmation Procedure has been previously conducted, always turn ignition switch OFF and wait at least 10 seconds before conducting the next test.

WITH CONSULT-III

1. Turn ignition switch ON and wait at least 5 seconds.
2. Turn ignition switch OFF and wait at least 10 seconds.
3. Turn ignition switch ON and select “DATA MONITOR” mode with CONSULT-III.

4. Start engine and let it idle for at least 1 minute.
5. Repeat next procedures three times.

a. Increase the engine speed up to 3,000 to 3,500 rpm and keep it for 2 minutes and 50 seconds to 3 minutes.
Never exceed 3 minutes.

b. Fully released accelerator pedal and keep engine idle for about 5 seconds.

6. Check 1st trip DTC.
7. If 1st trip DTC is detected, go to EC-370, "Diagnosis Procedure".
If 1st trip DTC is not detected, go to the next step.
8. Repeat next procedure 20 times.

a. Quickly increase the engine speed up to 4,000 to 4,500 rpm or more and keep it for 25 to 30 seconds.

b. Fully released accelerator pedal and keep engine idle for at least 35 seconds.

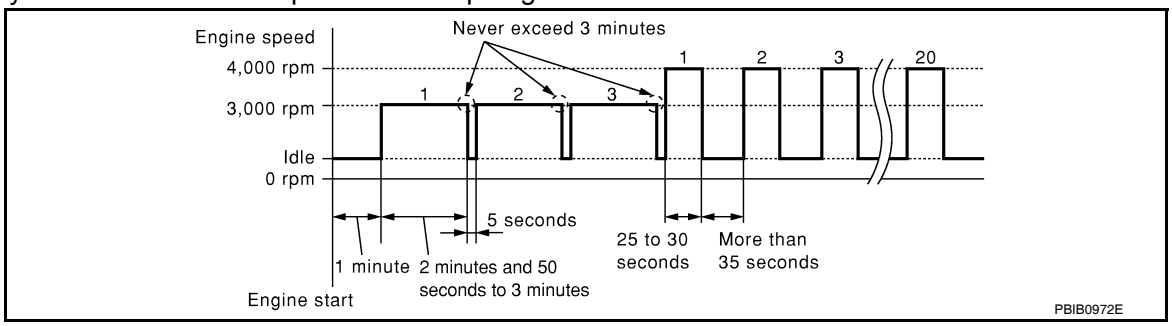

9. Check 1st trip DTC.
10. If 1st trip DTC is detected, go to EC-370, "Diagnosis Procedure".

WITH GST

Follow the procedure “WITH CONSULT-III” above.

Wiring Diagram

INFOID:0000000005284863

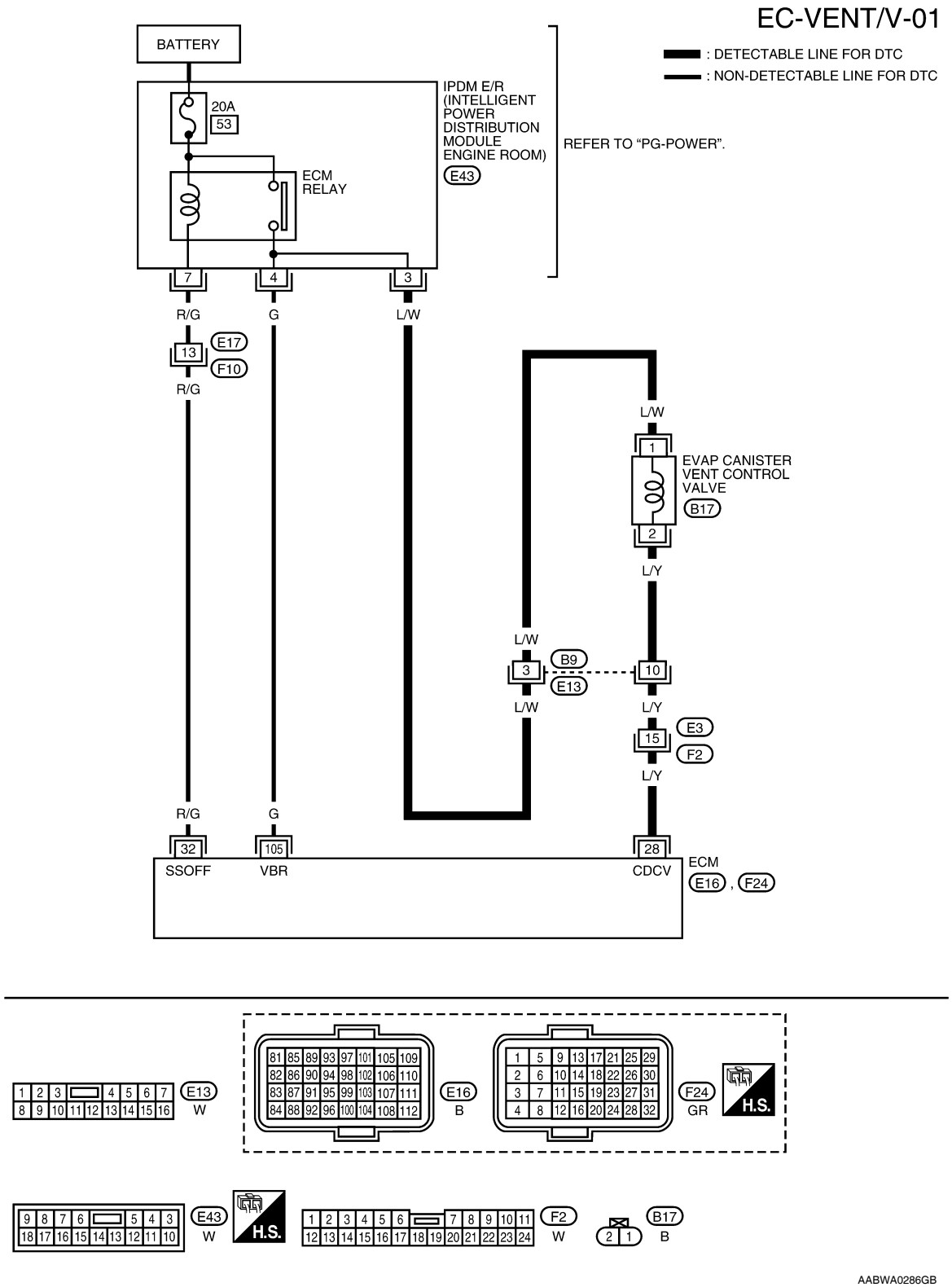

Specification data are reference values and are measured between each terminal and ground.

CAUTION:

Do not use ECM ground terminals when measuring input/output voltage. Doing so may result in damage to the ECM's transistor. Use a ground other than ECM terminals, such as the ground.

TERMINAL NO.	WIRE COLOR	ITEM	CONDITION	DATA (DC Voltage)
28	L/Y	EVAP canister vent control valve	**[Ignition switch: ON]**	BATTERY VOLTAGE (11 - 14 V)
32	R/G	ECM relay (Self shut-off)	**[Engine is running]** **[Ignition switch: OFF]** • For a few seconds after turning ignition switch OFF	0 - 1.0 V
			[Ignition switch: OFF] • More than a few seconds after turning ignition switch OFF	BATTERY VOLTAGE (11 - 14 V)
105	G	Power supply for ECM	**[Ignition switch: ON]**	BATTERY VOLTAGE (11 - 14 V)

Diagnosis Procedure

INFOID:0000000005284864

1. CHECK RUBBER TUBE

1. Turn ignition switch OFF.
2. Disconnect rubber tube connected to EVAP canister vent control valve (3).
3. Check the rubber tube for clogging.

- This illustration is a view from under vehicle
- EVAP control system pressure sensor (1)
- EVAP canister (2)

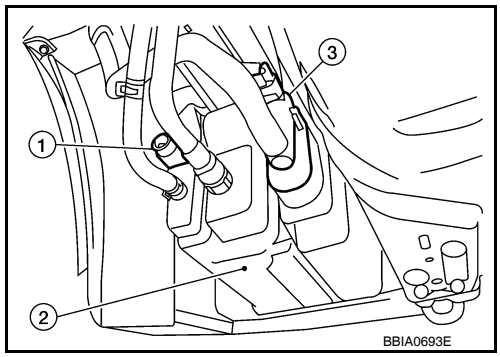

OK or NG

OK >> GO TO 2.
NG >> Clean rubber tube using an air blower.

2. CHECK DRAIN FILTER

Refer to EC-339, "Component Inspection".

OK or NG

OK >> GO TO 3.
NG >> Replace drain filter.

3. CHECK EVAP CANISTER VENT CONTROL VALVE

Refer to EC-371, "Component Inspection".

OK or NG

OK >> GO TO 4.
NG >> Replace EVAP canister vent control valve.

4. CHECK IF EVAP CANISTER SATURATED WITH WATER

1. Remove EVAP canister with EVAP canister vent control valve attached.
2. Does water drain from the EVAP canister?

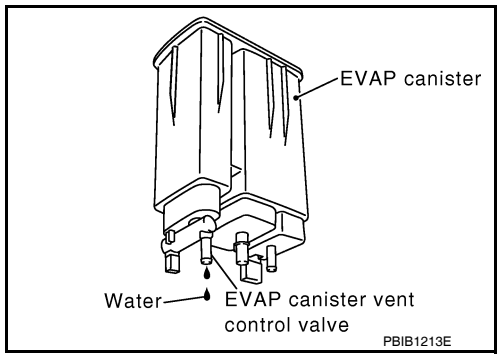

Yes >> GO TO 5.
No >> GO TO 7.

5. CHECK EVAP CANISTER

Weigh the EVAP canister with the EVAP canister vent control valve and EVAP control system pressure sensor attached.

The weight should be less than 1.9 kg (4.2 lb).

OK or NG

OK >> GO TO 7.
NG >> GO TO 6.

6. DETECT MALFUNCTIONING PART

Check the following.
- EVAP canister for damage
- EVAP hose between EVAP canister and vehicle frame for clogging or poor connection

>> Repair hose or replace EVAP canister.

7. CHECK EVAP CONTROL SYSTEM PRESSURE SENSOR CONNECTOR

1. Disconnect EVAP control system pressure sensor (1) harness connector.
- This illustration is a view from under vehicle
- EVAP canister (2)
- EVAP canister vent control valve (3)
2. Check connectors for water.

Water should not exist.

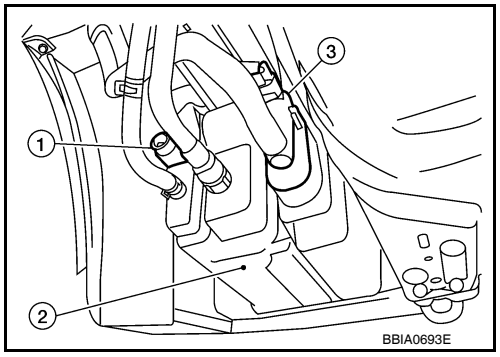

OK or NG

OK >> GO TO 8.
NG >> Replace EVAP control system pressure sensor.

8. CHECK EVAP CONTROL SYSTEM PRESSURE SENSOR

Refer to EC-390, "Component Inspection".

OK or NG

OK >> GO TO 9.
NG >> Replace EVAP control system pressure sensor.

9. CHECK INTERMITTENT INCIDENT

Refer to EC-152.

>> **INSPECTION END**

Component Inspection

INFOID:0000000005284865

EVAP CANISTER VENT CONTROL VALVE

WITH CONSULT-III

1. Remove EVAP canister vent control valve from EVAP canister.

2. Check portion **B** of EVAP canister vent control valve for being rusted.
   If NG, replace EVAP canister vent control valve.
   If OK, go to next step.
3. Reconnect harness connectors disconnected.
4. Turn ignition switch ON.

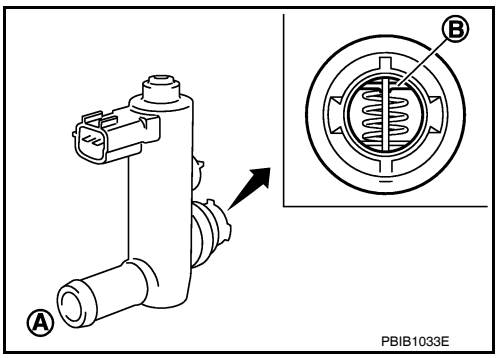

5. Perform “VENT CONTROL/V” in “ACTIVE TEST” mode.
6. Check air passage continuity and operation delay time.
   Make sure new O-ring is installed properly.

Condition VENT CONTROL/V	Air passage continuity between A and B
ON	No
OFF	Yes

Operation takes less than 1 second.
If NG, go to next step.

7. Clean the air passage (Portion **A** to **B**) of EVAP canister vent control valve using an air blower.
8. Perform step 6 again.
   If NG, replace EVAP canister vent control valve.

WITHOUT CONSULT-III

1. Remove EVAP canister vent control valve from EVAP canister.
2. Check portion **B** of EVAP canister vent control valve for being rusted.

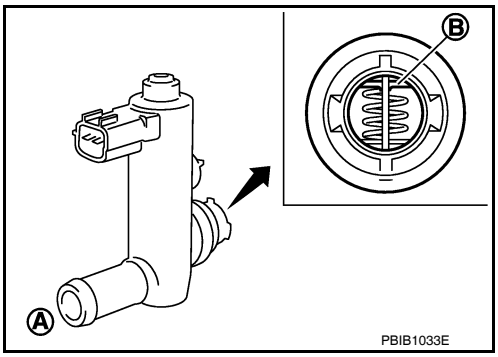

3. Check air passage continuity and operation delay time under the following conditions.
   Make sure new O-ring is installed properly.

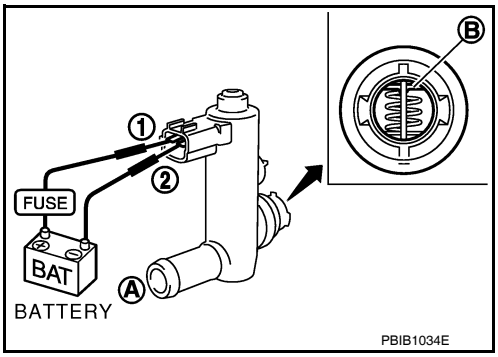

Condition	Air passage continuity between A and B
12 V direct current supply between terminals 1 and 2	No
OFF	Yes

Operation takes less than 1 second.
If NG, go to next step.

4. Clean the air passage (Portion **A** to **B**) of EVAP canister vent control valve using an air blower.
5. Perform step 3 again.
   If NG, replace EVAP canister vent control valve.

DTC P0451 EVAP CONTROL SYSTEM PRESSURE SENSOR

Component Description

INFOID:0000000005284866

The EVAP control system pressure sensor (1) detects pressure in the purge line. The sensor output voltage to the ECM increases as pressure increases.
- This illustration is a view from under vehicle
- EVAP canister (2)
- EVAP canister vent control valve (3)

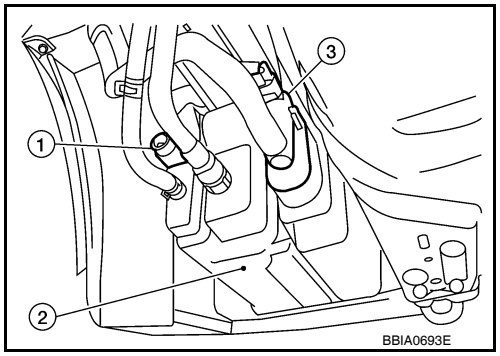

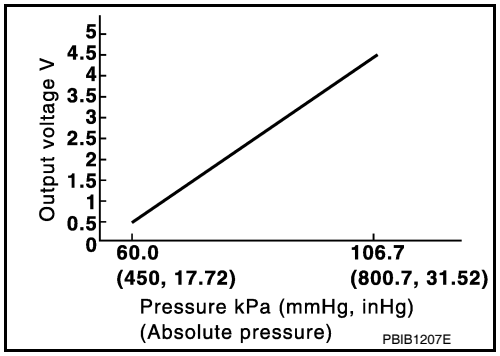

CONSULT-III Reference Value in Data Monitor Mode

INFOID:0000000005284867

Specification data are reference values.

Monitor item	Condition	Specification
EVAP SYS PRES	• Ignition switch: ON	Approx. 1.8 - 4.8 V

On Board Diagnosis Logic

INFOID:0000000005284868

DTC No.	Trouble diagnosis name	DTC detecting condition	Possible cause
P0451 0451	EVAP control system pressure sensor performance	ECM detects a sloshing signal from the EVAP control system pressure sensor	• Harness or connectors [Crankshaft position sensor (POS) circuit is shorted.] (Accelerator pedal position sensor circuit is shorted.) (Refrigerant pressure sensor circuit is shorted.) (Tumble control valve position sensor circuit is shorted.) • EVAP control system pressure sensor • Crankshaft position sensor (POS) • Accelerator pedal position sensor • Refrigerant pressure sensor • Tumble control valve position sensor

DTC Confirmation Procedure

INFOID:0000000005284869

NOTE:
If DTC Confirmation Procedure has been previously conducted, always turn ignition switch OFF and wait at least 10 seconds before conducting the next test.

1. Start engine and wait at least 40 seconds.

NOTE:
Do not depress accelerator pedal even slightly.

2. Check 1st trip DTC.
3. If 1st trip DTC is detected, go to EC-374, "Diagnosis Procedure".

Diagnosis Procedure

INFOID:0000000005284870

1. CHECK GROUND CONNECTIONS

1. Turn ignition switch OFF.
2. Loosen and retighten ground screws on the body.
   Refer to EC-157, "Ground Inspection".

- ⇦ : Vehicle front
- Body ground (1)

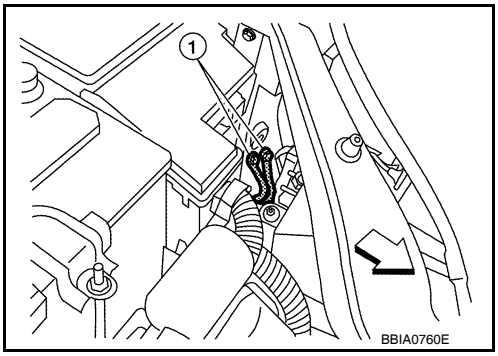

OK or NG

OK >> GO TO 2.
NG >> Repair or replace ground connections.

2. CHECK EVAP CONTROL SYSTEM PRESSURE SENSOR CONNECTOR FOR WATER

1. Disconnect EVAP control system pressure sensor (1) harness connector.

- This illustration is a view from under vehicle
- EVAP canister (2)
- EVAP canister vent control valve (3)

2. Check sensor harness connector for water.

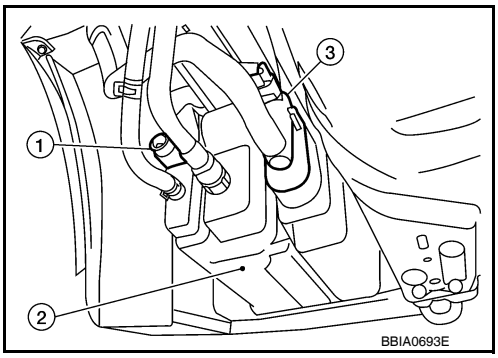

Water should not exist.

OK or NG

OK >> GO TO 3.
NG >> Repair or replace harness connector.

3. CHECK EVAP CONTROL SYSTEM PRESSURE SENSOR

Refer to EC-375, "Component Inspection".

OK or NG

OK >> GO TO 4.
NG >> Replace EVAP control system pressure sensor.

4. CHECK POWER SUPPLY CIRCUITS

Check harness for short to power and short to ground, between the following terminals.

ECM terminal	Sensor terminal	Reference Wiring Diagram
69	Tumble control valve position sensor terminal 1	EC-486, "Wiring Diagram"
74	Refrigerant pressure sensor terminal 3	EC-571, "Wiring Diagram"
75	Crankshaft position sensor (POS) terminal 1	EC-319, "Wiring Diagram"
76	EVAP control system pressure sensor terminal 3	EC-378, "Wiring Diagram"
102	APP sensor terminal 5	EC-514, "Wiring Diagram"

OK or NG

OK >> GO TO 5.
NG >> Repair short to ground or short to power in harness or connectors.

5. CHECK TUMBLE CONTROL VALVE POSITION SENSOR

Refer to EC-487, "Diagnosis Procedure".

OK or NG

OK >> GO TO 6.
NG >> Replace intake manifold adapter.

6. CHECK REFRIGERANT PRESSURE SENSOR

Refer to MTC-27.

OK or NG

OK >> GO TO 7.
NG >> Replace refrigerant pressure sensor.

7. CHECK CRANKSHAFT POSITION SENSOR (POS)

Refer to EC-382, "Component Inspection".

OK or NG

OK >> GO TO 8.
NG >> Replace crankshaft position sensor (POS).

8. CHECK APP SENSOR

Refer to EC-517, "Component Inspection".

OK or NG

OK >> GO TO 10.
NG >> GO TO 9.

9. REPLACE ACCELERATOR PEDAL ASSEMBLY

1. Replace accelerator pedal assembly.
2. Perform EC-99, "Accelerator Pedal Released Position Learning".
3. Perform EC-99, "Throttle Valve Closed Position Learning".
4. Perform EC-99, "Idle Air Volume Learning".

>> **INSPECTION END**

10. CHECK INTERMITTENT INCIDENT

Refer to EC-152.
For wiring diagram, refer to EC-378, "Wiring Diagram".

>> **INSPECTION END**

Component Inspection

INFOID:0000000005284871

EVAP CONTROL SYSTEM PRESSURE SENSOR

1. Remove EVAP control system pressure sensor with its harness connector connected from EVAP canister. **Always replace O-ring with a new one.**
2. Install a vacuum pump to EVAP control system pressure sensor.
3. Turn ignition switch ON and check output voltage between ECM terminal 42 and ground under the following conditions.

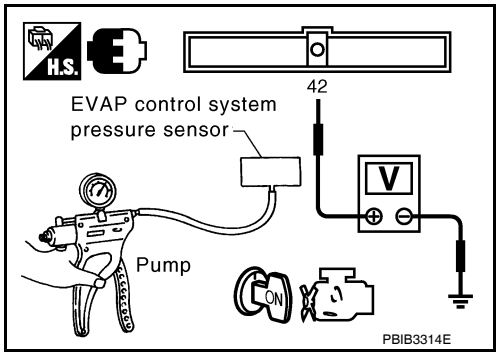

Applied vacuum kPa (mmHg, inHg)	Voltage
Not applied	1.8 - 4.8 V
-26.7 (-200, -7.87)	2.1 to 2.5 V lower than above value

CAUTION:
- **Always calibrate the vacuum pump gauge when using it.**
- **Do not apply below -93.3 kPa (-700 mmHg, -27.56 inHg) or pressure over 101.3 kPa (760 mmHg, 29.92 inHg).**

4. If NG, replace EVAP control system pressure sensor.

DTC P0452 EVAP CONTROL SYSTEM PRESSURE SENSOR

Component Description

INFOID:0000000005284872

The EVAP control system pressure sensor (1) detects pressure in the purge line. The sensor output voltage to the ECM increases as pressure increases.
- This illustration is a view from under vehicle
- EVAP canister (2)
- EVAP canister vent control valve (3)

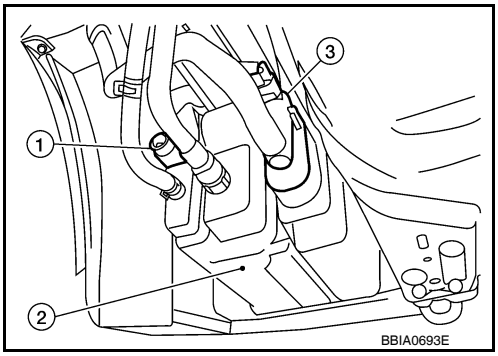

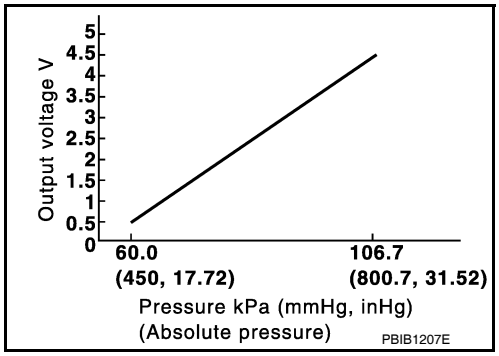

CONSULT-III Reference Value in Data Monitor Mode

INFOID:0000000005284873

Specification data are reference values.

Monitor item	Condition	Specification
EVAP SYS PRES	• Ignition switch: ON	Approx. 1.8 - 4.8 V

On Board Diagnosis Logic

INFOID:0000000005284874

DTC No.	Trouble diagnosis name	DTC detecting condition	Possible cause
P0452 0452	EVAP control system pressure sensor low input	An excessively low voltage from the sensor is sent to ECM.	• Harness or connectors (EVAP control system pressure sensor circuit is open or sorted.) [Crankshaft position sensor (POS) circuit is shorted.] (Accelerator pedal position sensor circuit is shorted.) (Refrigerant pressure sensor circuit is shorted.) (Tumble control valve position sensor circuit is shorted.) • EVAP control system pressure sensor • Crankshaft position sensor (POS) • Accelerator pedal position sensor • Refrigerant pressure sensor • Tumble control valve position sensor

DTC Confirmation Procedure

INFOID:0000000005284875

NOTE:

If DTC Confirmation Procedure has been previously conducted, always turn ignition switch OFF and wait at least 10 seconds before conducting the next test.

TESTING CONDITION:

Always perform test at a temperature of 5°C (41°F) or more.

WITH CONSULT-III

1. Start engine and warm it up to normal operating temperature.
2. Turn ignition switch OFF and wait at least 10 seconds.
3. Turn ignition switch ON.
4. Select “DATA MONITOR” mode with CONSULT-III.
5. Make sure that “FUEL T/TMP SE” is more than 0°C (32°F).
6. Start engine and wait at least 20 seconds.
7. Check 1st trip DTC.
   If 1st trip DTC is detected, go to EC-379, "Diagnosis Procedure".

WITH GST

1. Start engine and warm it up to normal operating temperature.
2. Check that voltage between ECM terminal 43 (Fuel tank temperature sensor signal) and ground is less than 4.2 V.
3. Turn ignition switch OFF and wait at least 10 seconds.
4. Start engine and wait at least 20 seconds.
5. Select Service $07 with GST.
   If 1st trip DTC is detected, go to EC-379, "Diagnosis Procedure".

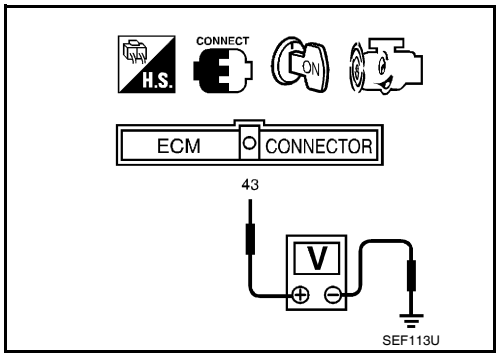

Wiring Diagram

INFOID:0000000005284876

EC-PRE/SE-01

: DETECTABLE LINE FOR DTC
: NON-DETECTABLE LINE FOR DTC

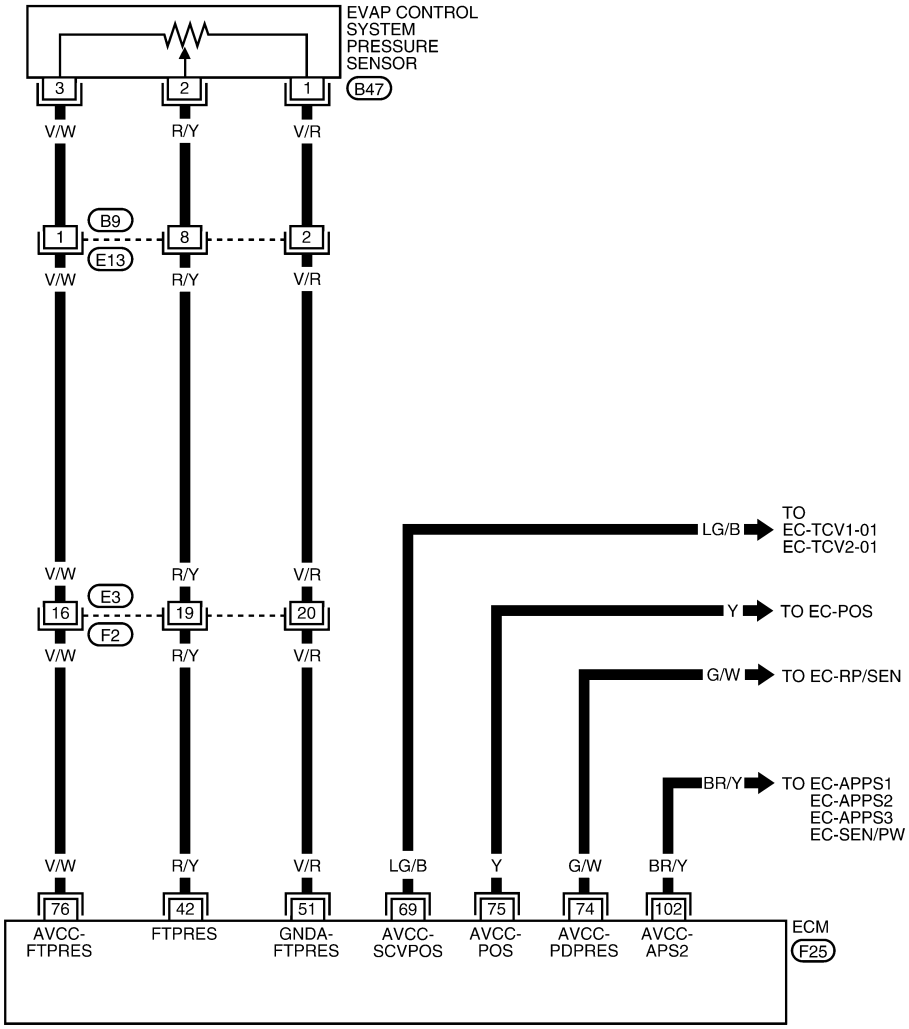

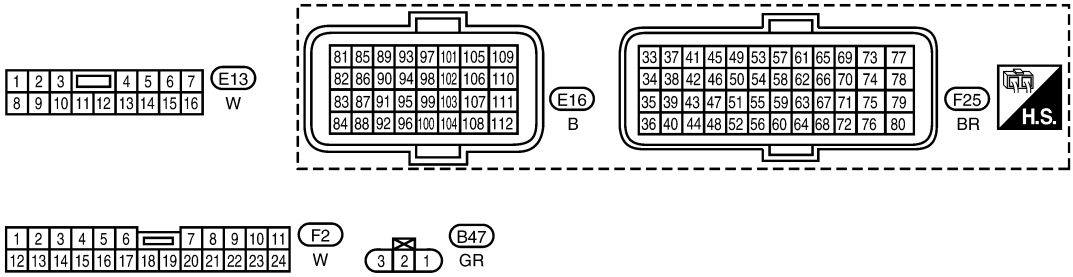

ABBWA0220GB

Specification data are reference values and are measured between each terminal and ground.

CAUTION:

Do not use ECM ground terminals when measuring input/output voltage. Doing so may result in damage to the ECM's transistor. Use a ground other than ECM terminals, such as the ground.

TERMINAL NO.	WIRE COLOR	ITEM	CONDITION	DATA (DC Voltage)
42	R/Y	EVAP control system pressure sensor	**[Ignition switch: ON]**	Approximately 1.8 - 4.8 V
51	V/R	Sensor ground (EVAP control system pressure sensor)	**[Engine is running]** • **Warm-up condition** • Idle speed	Approximately 0 V
69	LG/B	Sensor power supply (Tumble control valve position sensor)	**[Ignition switch: ON]**	Approximately 5 V
74	G/W	Sensor power supply (Refrigerant pressure sensor)	**[Ignition switch: ON]**	Approximately 5 V
75	Y	Sensor power supply [Crankshaft position sensor (POS)]	**[Ignition switch: ON]**	Approximately 5 V
76	V/W	EVAP control system pressure sensor power supply	**[Ignition switch: ON]**	Approximately 5 V
102	BR/Y	Sensor power supply (APP sensor 2)	**[Ignition switch: ON]**	Approximately 5 V

Diagnosis Procedure

INFOID:0000000005284877

1. CHECK GROUND CONNECTIONS

1. Turn ignition switch OFF.
2. Loosen and retighten ground screws on the body.
   Refer to EC-157, "Ground Inspection".

- ⇦ : Vehicle front
- Body ground (1)

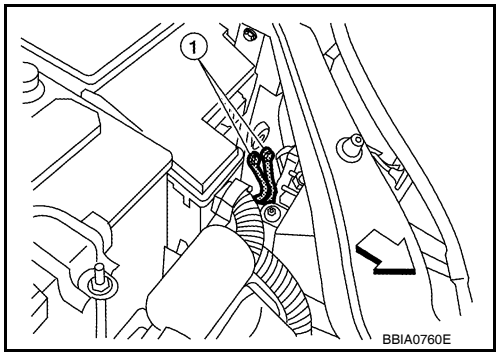

OK or NG

OK >> GO TO 2.
NG >> Repair or replace ground connections.

2. CHECK CONNECTOR

1. Disconnect EVAP control system pressure sensor (1) harness connector.

- This illustration is a view from under vehicle
- EVAP canister (2)
- EVAP canister vent control valve (3)

2. Check sensor harness connector for water.

Water should not exist.

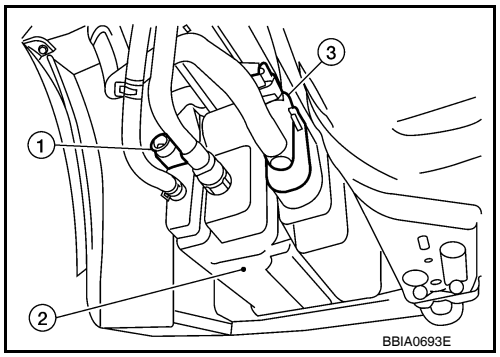

OK or NG

OK >> GO TO 3.
NG >> Repair or replace harness connector.

3. CHECK EVAP CONTROL SYSTEM PRESSURE SENSOR POWER SUPPLY CIRCUIT-I

1. Turn ignition switch ON.

2. Check voltage between EVAP control system pressure sensor terminal 3 and ground with CONSULT-III or tester.

Voltage: Approximately 5 V

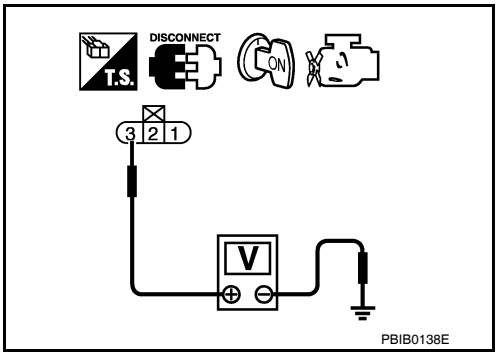

OK or NG

OK >> GO TO 12.
NG >> GO TO 4.

4. CHECK EVAP CONTROL SYSTEM PRESSURE SENSOR POWER SUPPLY CIRCUIT-II

1. Turn ignition switch OFF.
2. Disconnect ECM harness connector.
3. Check harness continuity between EVAP control system pressure sensor terminal 3 and ECM terminal 76. Refer to Wiring Diagram.

Continuity should exist.

OK or NG

OK >> GO TO 6.
NG >> GO TO 5.

5. DETECT MALFUNCTIONING PART

Check the following.
- Harness connectors E3, F2
- Harness connectors B9, E13
- Harness for open or short between EVAP control system pressure sensor and ECM

>> Repair open circuit or short to ground or short to power in harness or connectors.

6. CHECK POWER SUPPLY CIRCUITS

Check harness for short to power and short to ground between the following terminals.

ECM terminal	Sensor terminal	Reference Wiring Diagram
69	Tumble control valve position sensor terminal 1	EC-486, "Wiring Diagram"
74	Refrigerant pressure sensor terminal 3	EC-571, "Wiring Diagram"
75	Crankshaft position sensor (POS) terminal 1	EC-319, "Wiring Diagram"
76	EVAP control system pressure sensor terminal 3	EC-378, "Wiring Diagram"
102	APP sensor terminal 5	EC-514, "Wiring Diagram"

OK or NG

OK >> GO TO 7.
NG >> Repair short to ground or short to power in harness or connectors.

7. CHECK TUMBLE CONTROL VALVE POSITION SENSOR

Refer to EC-487, "Diagnosis Procedure".

OK or NG

OK >> GO TO 8.
NG >> Replace intake manifold adapter.

8. CHECK REFRIGERANT PRESSURE SENSOR

Refer to MTC-27.

OK or NG

OK >> GO TO 9.
NG >> Replace refrigerant pressure sensor.

9. CHECK CRANKSHAFT POSITION SENSOR (POS)

Refer to EC-382, "Component Inspection".

OK or NG

OK >> GO TO 10.
NG >> Replace crankshaft position sensor (POS).

10. CHECK APP SENSOR

Refer to EC-517, "Component Inspection".

OK or NG

OK >> GO TO 17.
NG >> GO TO 11.

11. REPLACE ACCELERATOR PEDAL ASSEMBLY

1. Replace accelerator pedal assembly.
2. Perform EC-99, "Accelerator Pedal Released Position Learning".
3. Perform EC-99, "Throttle Valve Closed Position Learning".
4. Perform EC-99, "Idle Air Volume Learning".

>> **INSPECTION END**

12. CHECK EVAP CONTROL SYSTEM PRESSURE SENSOR GROUND CIRCUIT FOR OPEN AND SHORT

1. Turn ignition switch OFF.
2. Disconnect ECM harness connector.
3. Check harness continuity between EVAP control system pressure sensor terminal 1 and ECM terminal 51. Refer to Wiring Diagram.

Continuity should exist.

4. Also check harness for short to ground and short to power.

OK or NG

OK >> GO TO 14.
NG >> GO TO 13.

13. DETECT MALFUNCTIONING PART

Check the following.
- Harness connectors E3, F2
- Harness connectors B9, E13
- Harness for open or short between EVAP control system pressure sensor and ECM

>> Repair open circuit or short to ground or short to power in harness or connectors.

14. CHECK EVAP CONTROL SYSTEM PRESSURE SENSOR INPUT SIGNAL CIRCUIT FOR OPEN AND SHORT

1. Check harness continuity between ECM terminal 42 and EVAP control system pressure sensor terminal 2. Refer to Wiring Diagram.

Continuity should exist.

2. Also check harness for short to ground and short to power.

OK or NG

OK >> GO TO 16.
NG >> GO TO 15.

15. DETECT MALFUNCTIONING PART

Check the following.
- Harness connectors E3, F2
- Harness connectors B9, E13

- Harness for open or short between ECM and EVAP control system pressure sensor

>> Repair open circuit or short to ground or short to power in harness or connectors.

16. CHECK EVAP CONTROL SYSTEM PRESSURE SENSOR

Refer to EC-382, "Component Inspection".

OK or NG

OK >> GO TO 17.
NG >> Replace EVAP control system pressure sensor.

17. CHECK INTERMITTENT INCIDENT

Refer to EC-152.

>> **INSPECTION END**

Component Inspection

INFOID:0000000005284878

EVAP CONTROL SYSTEM PRESSURE SENSOR

1. Remove EVAP control system pressure sensor with its harness connector connected from EVAP canister. **Always replace O-ring with a new one.**
2. Install a vacuum pump to EVAP control system pressure sensor.
3. Turn ignition switch ON and check output voltage between ECM terminal 42 and ground under the following conditions.

Applied vacuum kPa (mmHg, inHg)	Voltage
Not applied	1.8 - 4.8 V
-26.7 (-200, -7.87)	2.1 to 2.5 V lower than above value

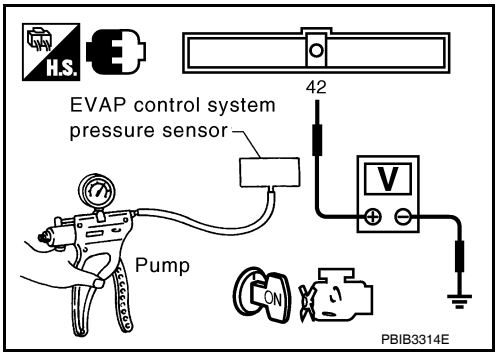

CAUTION:
- **Always calibrate the vacuum pump gauge when using it.**
- **Do not apply below -93.3 kPa (-700 mmHg, -27.56 inHg) or pressure over 101.3 kPa (760 mmHg, 29.92 inHg).**

4. If NG, replace EVAP control system pressure sensor.

DTC P0453 EVAP CONTROL SYSTEM PRESSURE SENSOR

Component Description

INFOID:0000000005284879

The EVAP control system pressure sensor (1) detects pressure in the purge line. The sensor output voltage to the ECM increases as pressure increases.
- This illustration is a view from under vehicle
- EVAP canister (2)
- EVAP canister vent control valve (3)

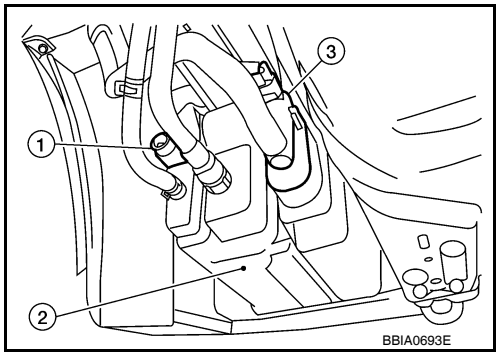

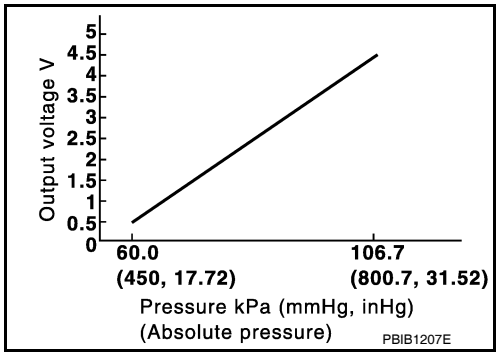

CONSULT-III Reference Value in Data Monitor Mode

INFOID:0000000005284880

Specification data are reference values.

Monitor item	Condition	Specification
EVAP SYS PRES	• Ignition switch: ON	Approx. 1.8 - 4.8 V

On Board Diagnosis Logic

INFOID:0000000005284881

DTC No.	Trouble diagnosis name	DTC detecting condition	Possible cause
P0453 0453	EVAP control system pressure sensor high input	An excessively high voltage from the sensor is sent to ECM.	• Harness or connectors (EVAP control system pressure sensor circuit is open or sorted.) [Crankshaft position sensor (POS) circuit is shorted.] (Accelerator pedal position sensor circuit is shorted.) (Refrigerant pressure sensor circuit is shorted.) (Tumble control valve position sensor circuit is shorted.) • EVAP control system pressure sensor • Crankshaft position sensor (POS) • Accelerator pedal position sensor • Refrigerant pressure sensor • EVAP canister vent control valve • EVAP canister • Drain filter • Rubber hose to EVAP canister vent control valve • Tumble control valve position sensor

DTC Confirmation Procedure

INFOID:0000000005284882

NOTE:
If DTC Confirmation Procedure has been previously conducted, always turn ignition switch OFF and wait at least 10 seconds before conducting the next test.
TESTING CONDITION:
Always perform test at a temperature of 5°C (41°F) or more.

WITH CONSULT-III

1. Start engine and warm it up to normal operating temperature.
2. Turn ignition switch OFF and wait at least 10 seconds.
3. Turn ignition switch ON.
4. Select “DATA MONITOR” mode with CONSULT-III.
5. Make sure that “FUEL T/TMP SE” is more than 0°C (32°F).
6. Wait at least 10 seconds.
7. Check 1st trip DTC.
   If 1st trip DTC is detected, go to EC-386, "Diagnosis Procedure" .

WITH GST

1. Start engine and warm it up to normal operating temperature.
2. Check that voltage between ECM terminal 43 (Fuel tank temperature sensor signal) and ground is less than 4.2 V.
3. Turn ignition switch OFF and wait at least 10 seconds.
4. Wait at least 10 seconds.
5. Select Service $07 with GST.
   If 1st trip DTC is detected, go to EC-386, "Diagnosis Procedure".

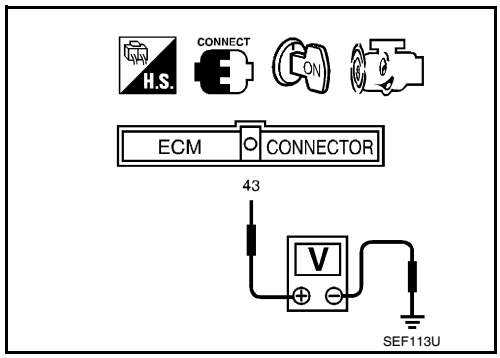

Wiring Diagram

INFOID:0000000005284883

EC-PRE/SE-01

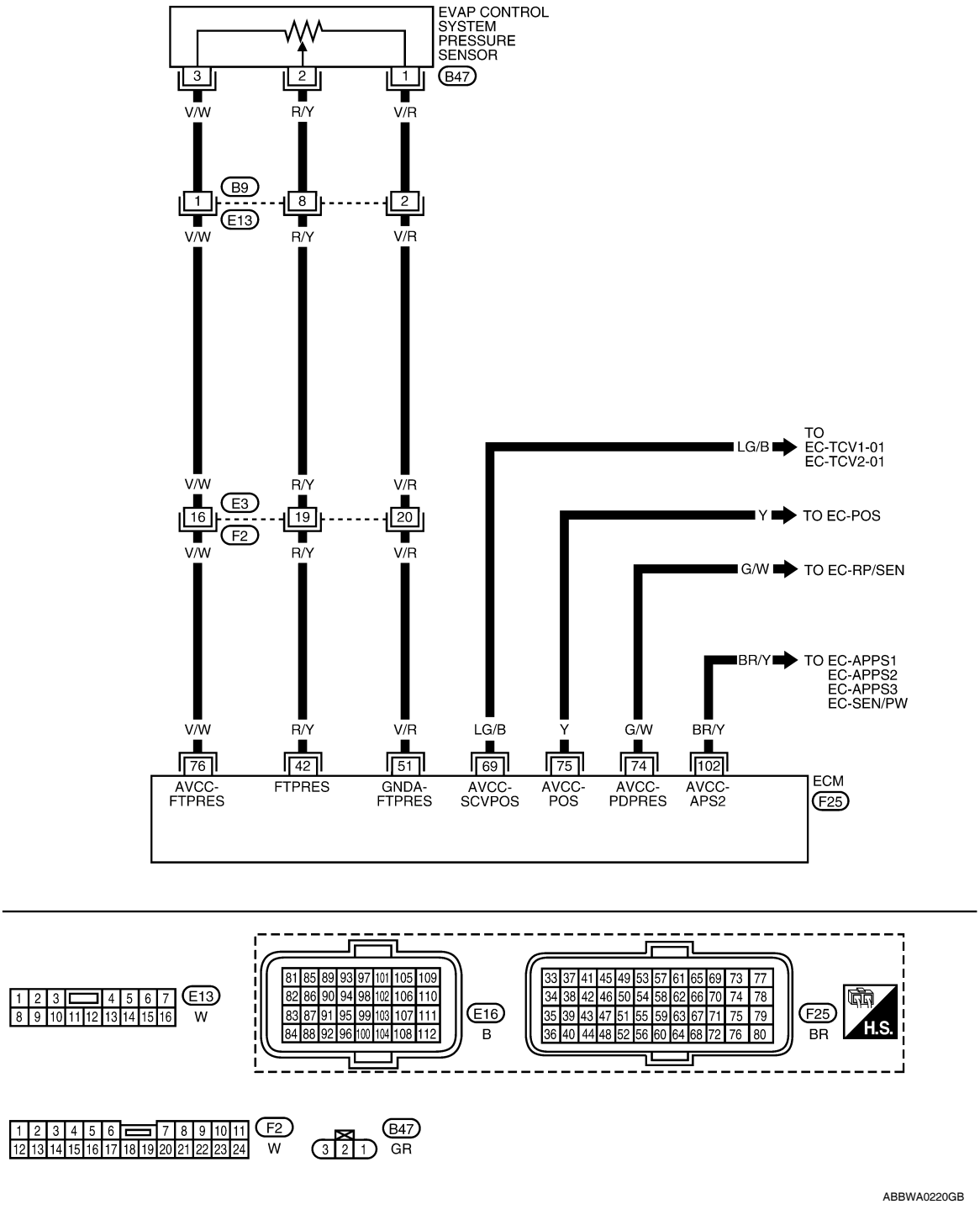

Specification data are reference values and are measured between each terminal and ground.

CAUTION:

Do not use ECM ground terminals when measuring input/output voltage. Doing so may result in damage to the ECM's transistor. Use a ground other than ECM terminals, such as the ground.

TERMINAL NO.	WIRE COLOR	ITEM	CONDITION	DATA (DC Voltage)
42	R/Y	EVAP control system pressure sensor	**[Ignition switch: ON]**	Approximately 1.8 - 4.8 V
51	V/R	Sensor ground (EVAP control system pressure sensor)	**[Engine is running]** • **Warm-up condition** • Idle speed	Approximately 0 V
69	LG/B	Sensor power supply (Tumble control valve position sensor)	**[Ignition switch: ON]**	Approximately 5 V
74	G/W	Sensor power supply (Refrigerant pressure sensor)	**[Ignition switch: ON]**	Approximately 5 V
75	Y	Sensor power supply [Crankshaft position sensor (POS)]	**[Ignition switch: ON]**	Approximately 5 V
76	V/W	EVAP control system pressure sensor power supply	**[Ignition switch: ON]**	Approximately 5 V
102	BR/Y	Sensor power supply (APP sensor 2)	**[Ignition switch: ON]**	Approximately 5 V

Diagnosis Procedure

INFOID:0000000005284884

1. CHECK GROUND CONNECTIONS

1. Turn ignition switch OFF.
2. Loosen and retighten ground screws on the body.
   Refer to EC-157, "Ground Inspection".

- ⇦ : Vehicle front
- Body ground (1)

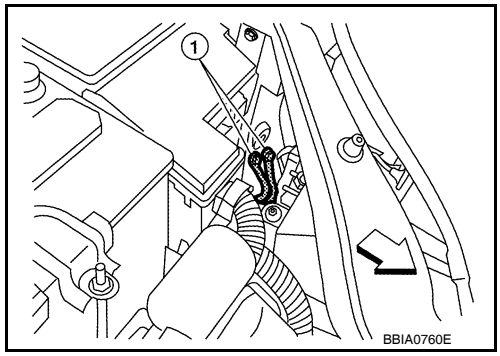

OK or NG

OK >> GO TO 2.
NG >> Repair or replace ground connections.

2. CHECK CONNECTOR

1. Disconnect EVAP control system pressure sensor (1) harness connector.

- This illustration is a view from under vehicle
- EVAP canister (2)
- EVAP canister vent control valve (3)

2. Check sensor harness connector for water.

Water should not exist.

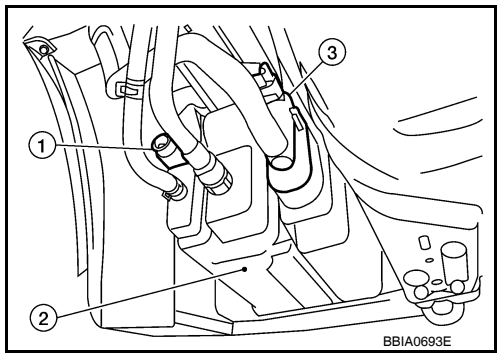

OK or NG

OK >> GO TO 3.
NG >> Repair or replace harness connector.

3. CHECK EVAP CONTROL SYSTEM PRESSURE SENSOR POWER SUPPLY CIRCUIT-I

1. Turn ignition switch ON.

2. Check voltage between EVAP control system pressure sensor terminal 3 and ground with CONSULT-III or tester.

Voltage: Approximately 5 V

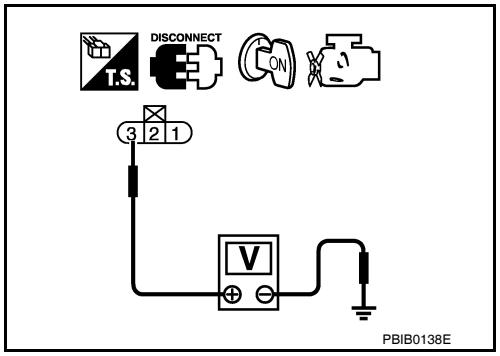

OK or NG

OK >> GO TO 12.
NG >> GO TO 4.

4. CHECK EVAP CONTROL SYSTEM PRESSURE SENSOR POWER SUPPLY CIRCUIT-II

1. Turn ignition switch OFF.
2. Disconnect ECM harness connector.
3. Check harness continuity between EVAP control system pressure sensor terminal 3 and ECM terminal 76. Refer to Wiring Diagram.

Continuity should exist.

OK or NG

OK >> GO TO 6.
NG >> GO TO 5.

5. DETECT MALFUNCTIONING PART

Check the following.
- Harness connectors E3, F2
- Harness connectors B9, E13
- Harness for open or short between EVAP control system pressure sensor and ECM

>> Repair open circuit or short to ground or short to power in harness or connectors.

6. CHECK POWER SUPPLY CIRCUITS

Check harness for short to power and short to ground, between the following terminals.

ECM terminal	Sensor terminal	Reference Wiring Diagram
69	Tumble control valve position sensor terminal 1	EC-486, "Wiring Diagram"
74	Refrigerant pressure sensor terminal 3	EC-571, "Wiring Diagram"
75	Crankshaft position sensor (POS) terminal 1	EC-319, "Wiring Diagram"
76	EVAP control system pressure sensor terminal 3	EC-378, "Wiring Diagram"
102	APP sensor terminal 5	EC-514, "Wiring Diagram"

OK or NG

OK >> GO TO 7.
NG >> Repair short to ground or short to power in harness or connectors.

7. CHECK TUMBLE CONTROL VALVE POSITION SENSOR

Refer to EC-487, "Diagnosis Procedure".

OK or NG

OK >> GO TO 8.
NG >> Replace intake manifold adapter.

8. CHECK REFRIGERANT PRESSURE SENSOR

Refer to MTC-27.

OK or NG

OK >> GO TO 9.
NG >> Replace refrigerant pressure sensor.

9. CHECK CRANKSHAFT POSITION SENSOR (POS)

Refer to EC-382, "Component Inspection".

OK or NG

OK >> GO TO 10.
NG >> Replace crankshaft position sensor (POS).

10. CHECK APP SENSOR

Refer to EC-517, "Component Inspection".

OK or NG

OK >> GO TO 23.
NG >> GO TO 11.

11. REPLACE ACCELERATOR PEDAL ASSEMBLY

1. Replace accelerator pedal assembly.
2. Perform EC-99, "Accelerator Pedal Released Position Learning".
3. Perform EC-99, "Throttle Valve Closed Position Learning".
4. Perform EC-99, "Idle Air Volume Learning".

>> **INSPECTION END**

12. CHECK EVAP CONTROL SYSTEM PRESSURE SENSOR GROUND CIRCUIT FOR OPEN AND SHORT

1. Turn ignition switch OFF.
2. Disconnect ECM harness connector.
3. Check harness continuity between EVAP control system pressure sensor terminal 1 and ECM terminal 51. Refer to Wiring Diagram.

Continuity should exist.

4. Also check harness for short to ground and short to power.

OK or NG

OK >> GO TO 14.
NG >> GO TO 13.

13. DETECT MALFUNCTIONING PART

Check the following.
- Harness connectors E3, F2
- Harness connectors B9, E13
- Harness for open or short between EVAP control system pressure sensor and ECM

>> Repair open circuit or short to ground or short to power in harness or connectors.

14. CHECK EVAP CONTROL SYSTEM PRESSURE SENSOR INPUT SIGNAL CIRCUIT FOR OPEN AND SHORT

1. Check harness continuity between ECM terminal 42 and EVAP control system pressure sensor terminal 2. Refer to Wiring Diagram.

Continuity should exist.

2. Also check harness for short to ground and short to power.

OK or NG

OK >> GO TO 16.
NG >> GO TO 15.

15. DETECT MALFUNCTIONING PART

Check the following.
- Harness connectors E3, F2
- Harness connectors B9, E13

- Harness for open or short between ECM and EVAP control system pressure sensor

>> Repair open circuit or short to ground or short to power in harness or connectors.

16. CHECK RUBBER TUBE

1. Disconnect rubber tube connected to EVAP canister vent control valve.
2. Check the rubber tube for clogging, vent and kinked.

OK or NG

OK >> GO TO 17.
NG >> Clean the rubber tube using an air blower, repair or replace rubber tube.

17. CHECK EVAP CANISTER VENT CONTROL VALVE

Refer to EC-365, "Component Inspection".

OK or NG

OK >> GO TO 18.
NG >> Replace EVAP canister vent control valve.

18. CHECK EVAP CONTROL SYSTEM PRESSURE SENSOR

Refer to EC-390, "Component Inspection".

OK or NG

OK >> GO TO 19.
NG >> Replace EVAP control system pressure sensor.

19. CHECK DRAIN FILTER

Refer to EC-339, "Component Inspection".

OK or NG

OK >> GO TO 20.
NG >> Replace drain filter.

20. CHECK IF EVAP CANISTER SATURATED WITH WATER

1. Remove EVAP canister with EVAP canister vent control valve and EVAP control system pressure sensor attached.
2. Does water drain from the EVAP canister?

Yes or No

Yes >> GO TO 21.
No >> GO TO 23.

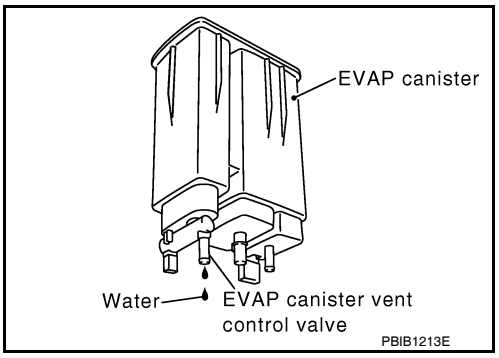

21. CHECK EVAP CANISTER

Weigh the EVAP canister with the EVAP canister vent control valve and EVAP control system pressure sensorattached.

The weight should be less than 1.9 kg (4.2 lb).

OK or NG

OK >> GO TO 23.
NG >> GO TO 22.

22. DETECT MALFUNCTIONING PART

Check the following.

- EVAP canister for damage
- EVAP hose connected to EVAP canister for clogging or poor connection

>> Repair hose or replace EVAP canister.

23. CHECK INTERMITTENT INCIDENT

Refer to EC-152.

>> **INSPECTION END**

Component Inspection

INFOID:0000000005284885

EVAP CONTROL PRESSURE SENSOR

1. Remove EVAP control system pressure sensor with its harness connector connected from EVAP canister. **Always replace O-ring with a new one.**
2. Install a vacuum pump to EVAP control system pressure sensor.
3. Turn ignition switch ON and check output voltage between ECM terminal 42 and ground under the following conditions.

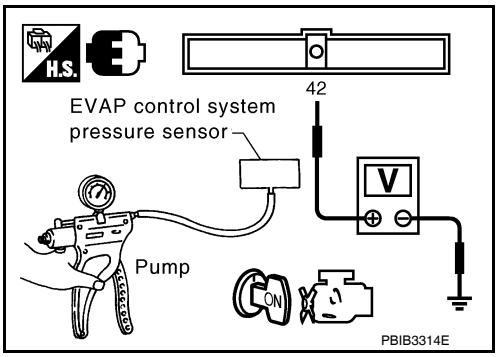

Applied vacuum kPa (mmHg, inHg)	Voltage
Not applied	1.8 - 4.8 V
-26.7 (-200, -7.87)	2.1 to 2.5 V lower than above value

CAUTION:
- **Always calibrate the vacuum pump gauge when using it.**
- **Do not apply below -93.3 kPa (-700 mmHg, -27.56 inHg) or pressure over 101.3 kPa (760 mmHg, 29.92 inHg).**

4. If NG, replace EVAP control system pressure sensor.

DTC P0455 EVAP CONTROL SYSTEM

On Board Diagnosis Logic

INFOID:0000000005284886

This diagnosis detects a very large leak (fuel filler cap fell off etc.) in EVAP system between the fuel tank and EVAP canister purge volume control solenoid valve.

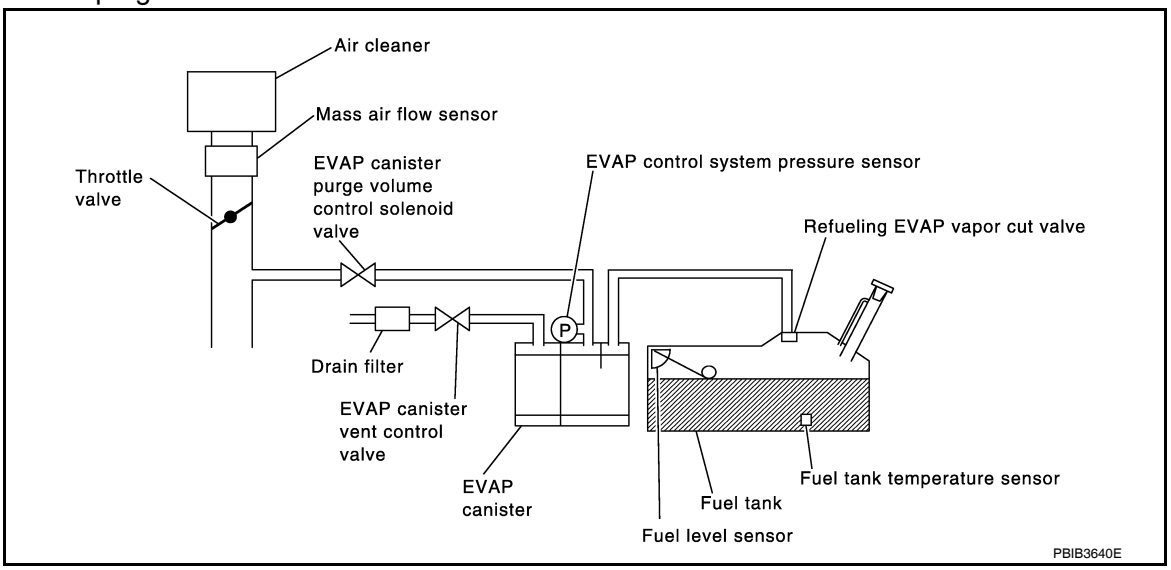

DTC No.	Trouble diagnosis name	DTC detecting condition	Possible cause
P0455 0455	EVAP control system gross leak detected	• EVAP control system has a very large leak such as fuel filler cap fell off. • EVAP control system does not operate properly.	• Fuel filler cap remains open or fails to close. • Incorrect fuel tank vacuum relief valve • Incorrect fuel filler cap used • Foreign matter caught in fuel filler cap • Leak is in line between intake manifold and EVAP canister purge volume control solenoid valve • Foreign matter caught in EVAP canister vent control valve. • EVAP canister or fuel tank leaks • EVAP purge line (pipe and rubber tube) leaks • EVAP purge line rubber tube bent. • Loose or disconnected rubber tube • EVAP canister vent control valve and the circuit • Drain filter • EVAP canister purge volume control solenoid valve and the circuit • Fuel tank temperature sensor • O-ring of EVAP canister vent control valve is missing or damaged. • EVAP control system pressure sensor • Refueling EVAP vapor cut valve • ORVR system leaks

CAUTION:
- **Use only a genuine NISSAN fuel filler cap as a replacement. If an incorrect fuel filler cap is used, the MIL may come on.**
- **If the fuel filler cap is not tightened properly, the MIL may come on.**
- **Use only a genuine NISSAN rubber tube as a replacement.**

DTC Confirmation Procedure

INFOID:0000000005284887

CAUTION:
Never remove fuel filler cap during the DTC Confirmation Procedure.

NOTE:
If DTC Confirmation Procedure has been previously conducted, always turn ignition switch OFF and wait at least 10 seconds before conducting the next test.

TESTING CONDITION:
- **Perform "DTC WORK SUPPORT" when the fuel level is between 1/4 and 3/4 full, and vehicle is placed on flat level surface.**
- **Open engine hood before conducting the following procedure.**

WITH CONSULT-III

1. Tighten fuel filler cap securely until reteaching sound is heard.
2. Turn ignition switch ON.
3. Turn ignition switch OFF and wait at least 10 seconds.
4. Turn ignition switch ON and select "DATA MONITOR" mode with CONSULT-III.
5. Make sure that the following conditions are met.
   COOLAN TEMP/S: 0 - 100°C (32 - 212°F)
   INT/A TEMP SE: 0 - 60°C (32 - 140°F)
6. Select "EVAP SML LEAK P0442/P1442" of "EVAPORATIVE SYSTEM" in "DTC WORK SUPPORT" mode with CONSULT-III.
   Follow the instruction displayed.
   NOTE:
   If the engine speed cannot be maintained within the range displayed on the CONSULT-III screen, go to EC-93, "Basic Inspection".
7. Make sure that "OK" is displayed.
   If "NG" is displayed, select "SELF-DIAG RESULTS" mode with CONSULT-III and make sure that "EVAP GROSS LEAK [P0455]" is displayed. If it is displayed, refer to EC-392, "Diagnosis Procedure".
   If P0442 is displayed, perform Diagnostic Procedure for DTC P0442, EC-341, "Diagnosis Procedure".

WITH GST

NOTE:
Be sure to read the explanation of Driving Pattern on EC-62, "Emission-related Diagnostic Information" before driving vehicle.

1. Start engine.
2. Drive vehicle according to Driving Pattern, EC-62, "Emission-related Diagnostic Information".
3. Stop vehicle.
4. Turn ignition switch OFF, wait at least 10 seconds and then turn ignition switch ON.
5. Select SERVICE $07 with GST.

- If P0441 is displayed on the screen, go to EC-336, "Diagnosis Procedure" for DTC P0441.
- If P0442 is displayed on the screen, go to EC-341, "Diagnosis Procedure" for DTC P0442.
- If P0455 is displayed on the screen, go to EC-392, "Diagnosis Procedure".

Diagnosis Procedure

INFOID:0000000005284888

1. CHECK FUEL FILLER CAP DESIGN

1. Turn ignition switch OFF.
2. Check for genuine NISSAN fuel filler cap design.

OK or NG

OK >> GO TO 2.
NG >> Replace with genuine NISSAN fuel filler cap.

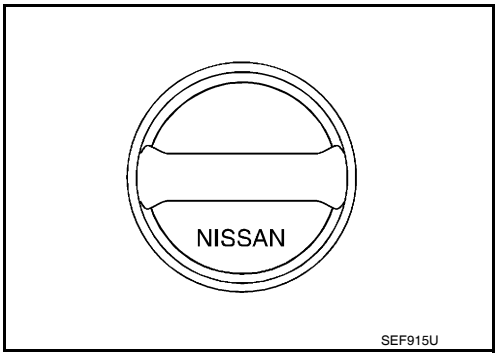

2. CHECK FUEL FILLER CAP INSTALLATION

Check that the cap is tightened properly by rotating the cap clockwise.

OK or NG

OK >> GO TO 3.
NG >> 1. Open fuel filler cap, then clean cap and fuel filler neck threads using air blower.
2. Retighten until reteaching sound is heard.

3. CHECK FUEL FILLER CAP FUNCTION

Check for air releasing sound while opening the fuel filler cap.

OK or NG

OK >> GO TO 5.
NG >> GO TO 4.

4. CHECK FUEL TANK VACUUM RELIEF VALVE

Refer to EC-47, "Component Inspection".

OK or NG

OK >> GO TO 5.
NG >> Replace fuel filler cap with a genuine one.

5. CHECK EVAP PURGE LINE

Check EVAP purge line (pipe, rubber tube, fuel tank and EVAP canister) for cracks, improper connection or disconnection.
Refer to EC-45.

OK or NG

OK >> GO TO 6.
NG >> Repair or reconnect the hose.

6. CLEAN EVAP PURGE LINE

Clean EVAP purge line (pipe and rubber tube) using air blower.

>> GO TO 7.

7. CHECK DRAIN FILTER

Refer to EC-396, "Component Inspection".

OK or NG

OK >> GO TO 8.
NG >> Replace drain filter.

8. CHECK EVAP CANISTER VENT CONTROL VALVE

Check the following.
- EVAP canister vent control is installed properly.
  Refer to EC-49, "Removal and Installation".
- EVAP canister vent control valve.
  Refer to EC-365, "Component Inspection".

OK or NG

OK >> GO TO 9.
NG >> Repair or replace EVAP canister vent control valve and O-ring.

9. INSTALL THE PRESSURE PUMP

To locate the EVAP leak, install EVAP service port adapter and pressure pump to EVAP service port securely. For the location of EVAP service port (2), refer to EC-45, "Description".
- EVAP canister purge volume control solenoid valve (1)
- ⇦: Vehicle front

NOTE:
Improper installation of the EVAP service port adapter to the EVAP service port may cause leaking.

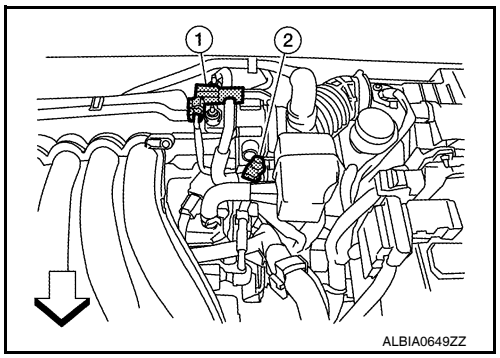

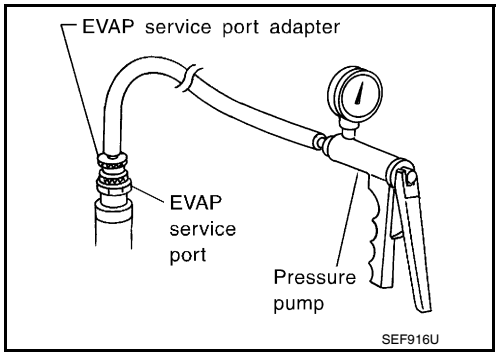

With CONSULT-III>>GO TO 10.
Without CONSULT-III>>GO TO 11.

10. CHECK FOR EVAP LEAK

With CONSULT-III

1. Turn ignition switch ON.
2. Select “EVAP SYSTEM CLOSE” of “WORK SUPPORT” mode with CONSULT-III.
3. Touch “START” and apply pressure into the EVAP line until the pressure indicator reaches the middle of the bar graph.
   CAUTION:
   - **Never use compressed air or a high pressure pump.**
   - **Do not exceed 4.12 kPa (0.042 kg/cm^2, 0.6 psi) of pressure in the system.**
4. Using EVAP leak detector, locate the EVAP leak. For the leak detector, refer to the instruction manual for more details.
   Refer to EC-45, "Description".

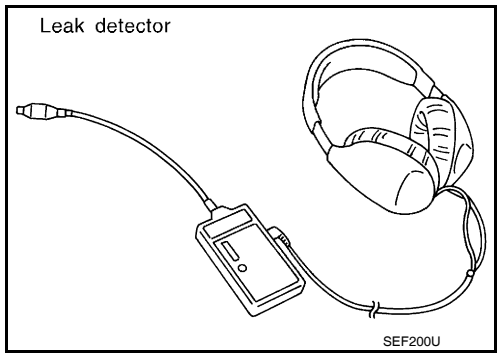

OK or NG

OK >> GO TO 12.
NG >> Repair or replace.

11. CHECK FOR EVAP LEAK

Without CONSULT-III

1. Turn ignition switch OFF.
2. Apply 12 volts DC to EVAP canister vent control valve (3). The valve will close. (Continue to apply 12 volts until the end of test.)

- This illustration is a view from under vehicle
- EVAP control system pressure sensor (1)
- EVAP canister (2)

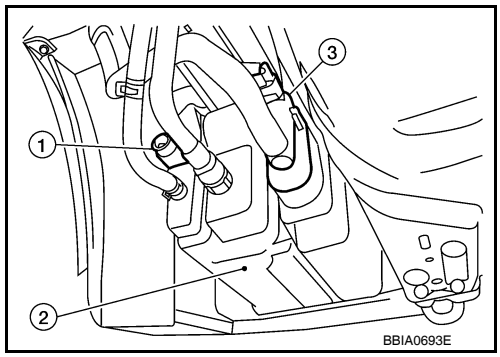

3. Pressurize the EVAP line using pressure pump with 1.3 to 2.7 kPa (10 to 20 mmHg, 0.39 to 0.79 inHg), then remove pump and EVAP service port adapter.
   CAUTION:
   - **Never use compressed air or a high pressure pump.**
   - **Do not exceed 4.12 kPa (0.042 kg/cm^2, 0.6 psi) of pressure in the system.**

4. Using EVAP leak detector, locate the EVAP leak. For the leak detector, refer to the instruction manual for more details.
   Refer to EC-45, "Description".

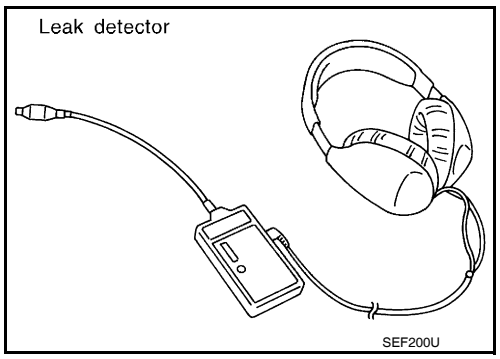

OK or NG

OK >> GO TO 13.
NG >> Repair or replace.

12. CHECK EVAP CANISTER PURGE VOLUME CONTROL SOLENOID VALVE OPERATION

With CONSULT-III

1. Disconnect vacuum hose to EVAP canister purge volume control solenoid valve at EVAP service port.
2. Start engine.
3. Perform “PURG VOL CONT/V” in “ACTIVE TEST” mode.
4. Touch “Qu” on CONSULT-III screen to increase “PURG VOL CONT/V” opening to 100%.
5. Check vacuum hose for vacuum when revving engine up to 2,000 rpm.

Vacuum should exist.

OK or NG

OK >> GO TO 15.
NG >> GO TO 14.

13. CHECK EVAP CANISTER PURGE VOLUME CONTROL SOLENOID VALVE OPERATION

Without CONSULT-III

1. Start engine and warm it up to normal operating temperature.
2. Stop engine.
3. Disconnect vacuum hose to EVAP canister purge volume control solenoid valve at EVAP service port.
4. Start engine and let it idle for at least 80 seconds.
5. Check vacuum hose for vacuum when revving engine up to 2,000 rpm.

Vacuum should exist.

OK or NG

OK >> GO TO 16.
NG >> GO TO 14.

14. CHECK VACUUM HOSE

Check vacuum hoses for clogging or disconnection. Refer to EC-121, "Vacuum Hose Drawing".

OK or NG

OK (With CONSULT-III)>>GO TO 15.
OK (Without CONSULT-III)>>GO TO 16.
NG >> Repair or reconnect the hose.

15. CHECK EVAP CANISTER PURGE VOLUME CONTROL SOLENOID VALVE

With CONSULT-III

1. Start engine.
2. Perform “PURG VOL CONT/V” in “ACTIVE TEST” mode with CONSULT-III. Check that engine speed varies according to the valve opening.

OK or NG

OK >> GO TO 17.
NG >> GO TO 16.

16. CHECK EVAP CANISTER PURGE VOLUME CONTROL SOLENOID VALVE

Refer to EC-360, "Component Inspection".

OK or NG

OK >> GO TO 17.
NG >> Replace EVAP canister purge volume control solenoid valve.

17. CHECK FUEL TANK TEMPERATURE SENSOR

Refer to EC-290, "Component Inspection".

OK or NG

OK >> GO TO 18.
NG >> Replace fuel level sensor unit.

18. CHECK EVAP CONTROL SYSTEM PRESSURE SENSOR

Refer to EC-382, "Component Inspection".

OK or NG

OK >> GO TO 19.
NG >> Replace EVAP control system pressure sensor.

19. CHECK EVAP/ORVR LINE

Check refueling EVAP/ORVR line between EVAP canister and fuel tank for clogging, kink, looseness and improper connection. For location, refer to EC-52.

OK or NG

OK >> GO TO 20.
NG >> Repair or replace hoses and tubes.

20. CHECK RECIRCULATION LINE

Check recirculation line between filler neck tube and fuel tank for clogging, kink, cracks, looseness and improper connection.

OK or NG

OK >> GO TO 21.
NG >> Repair or replace hoses, tubes or filler neck tube.

21. CHECK REFUELING EVAP VAPOR CUT VALVE

Refer to EC-55, "Component Inspection".

OK or NG

OK >> GO TO 22.
NG >> Replace refueling EVAP vapor cut valve with fuel tank.

22. CHECK INTERMITTENT INCIDENT

Refer to EC-152.

>> **INSPECTION END**

Component Inspection

INFOID:0000000005284889

DRAIN FILTER

1. Check visually for insect nests in the drain filter air inlet.
2. Check visually for cracks or flaws in the appearance.
3. Check visually for cracks or flaws in the hose.

4. Blow air into port A and check that it flows freely out of port B.
5. Block port B.
6. Blow air into port A and check that there is no leakage.
7. If NG, replace drain filter.

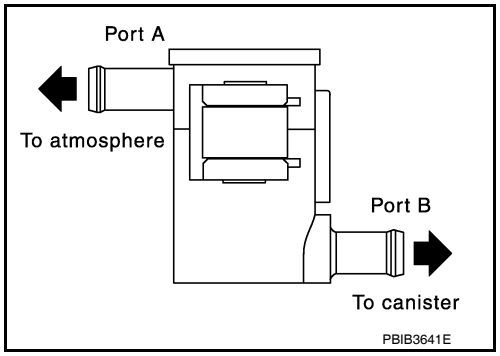

DTC P0456 EVAP CONTROL SYSTEM

On Board Diagnosis Logic

INFOID:0000000005284890

This diagnosis detects very small leaks in the EVAP line between fuel tank and EVAP canister purge volume control solenoid valve, using the intake manifold vacuum in the same way as conventional EVAP small leak diagnosis.
If ECM judges a leak which corresponds to a very small leak, the very small leak P0456 will be detected.
If ECM judges a leak equivalent to a small leak, EVAP small leak P0442 will be detected.
If ECM judges there are no leaks, the diagnosis will be OK.

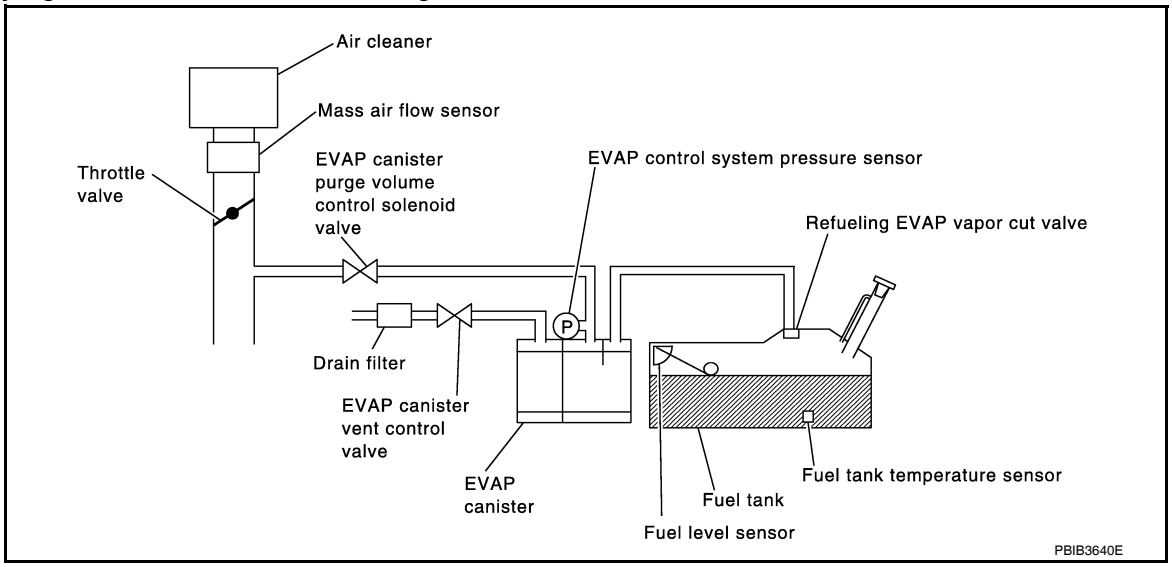

DTC No.	Trouble diagnosis name	DTC detecting condition	Possible cause
P0456 0456	Evaporative emission control system very small leak (negative pressure check)	• EVAP system has a very small leak. • EVAP system does not operate properly.	• Incorrect fuel tank vacuum relief valve • Incorrect fuel filler cap used • Fuel filler cap remains open or fails to close. • Foreign matter caught in fuel filler cap • Leak is in line between intake manifold and EVAP canister purge volume control solenoid valve. • Foreign matter caught in EVAP canister vent control valve • EVAP canister or fuel tank leaks • EVAP purge line (pipe and rubber tube) leaks • EVAP purge line rubber tube bent • Loose or disconnected rubber tube • EVAP canister vent control valve and the circuit • EVAP canister purge volume control solenoid valve and the circuit • Fuel tank temperature sensor • Drain filter • O-ring of EVAP canister vent control valve is missing or damaged • EVAP canister is saturated with water • EVAP control system pressure sensor • Refueling EVAP vapor cut valve • ORVR system leaks • Fuel level sensor and the circuit • Foreign matter caught in EVAP canister purge volume control solenoid valve

CAUTION:
- **Use only a genuine NISSAN fuel filler cap as a replacement. If an incorrect fuel filler cap is used, the MIL may come on.**
- **If the fuel filler cap is not tightened properly, the MIL may come on.**
- **Use only a genuine NISSAN rubber tube as a replacement.**

DTC Confirmation Procedure

INFOID:0000000005284891

NOTE:
- **If DTC P0456 is displayed with P0442, first perform trouble diagnosis for DTC P0456.**
- **After repair, make sure that the hoses and clips are installed properly.**
- If DTC Confirmation Procedure has been previously conducted, always turn ignition switch OFF and wait at least 10 seconds before conducting the next test.

TESTING CONDITION:
- **Open engine hood before conducting following procedure.**
- **If any of following conditions are met just before the DTC confirmation procedure, leave the vehicle for more than 1 hour.**
- **Fuel filler cap is removed.**
- **Refilled or drained the fuel.**
- **EVAP component parts is/are removed.**
- **Before performing the following procedure, confirm that battery voltage is more than 11 V at idle.**

WITH CONSULT-III

1. Turn ignition switch ON and select “DATA MONITOR” mode with CONSULT-III.
2. Make sure the following conditions are met.
   FUEL LEVEL SE: 0.25 - 1.4 V
   COOLAN TEMP/S: 0 - 32°C (32 - 90°F)
   FUEL T/TMP SE: 0 - 35°C (32 - 95°F)
   INT/A TEMP SE: More than 0°C (32°F)
   If NG, turn ignition switch OFF and leave the vehicle in a cool place (soak the vehicle) or refilling/draining fuel until the output voltage condition of the “FUEL LEVEL SE” meets within the range above and leave the vehicle for more than 1 hour. Then start from step 1).
3. Turn ignition switch OFF and wait at least 10 seconds.
4. Turn ignition switch ON.
5. Select “EVAP V/S LEAK P0456” of “EVAPORATIVE SYSTEM” in “DTC WORK SUPPORT” mode with CONSULT-III.
   Follow the instruction displayed.
6. Make sure that “OK” is displayed.
   If “NG” is displayed, refer to EC-400, "Diagnosis Procedure".
   NOTE:
   If the engine speed cannot be maintained within the range displayed on CONSULT-III screen, go to EC-93, "Basic Inspection".

Overall Function Check

INFOID:0000000005284892

WITH GST

Use this procedure to check the overall function of the EVAP very small leak function. During this check, a 1st trip DTC might not be confirmed.

CAUTION:
- **Never use compressed air, doing so may damage the EVAP system.**
- **Do not start engine.**
- **Do not exceeded 4.12 kPa (0.042 kg/cm^2, 0.6 psi).**

1. Attach the EVAP service port adapter securely to the EVAP service port (2).
- EVAP canister purge volume control solenoid valve (1)
- ⇦: Vehicle front

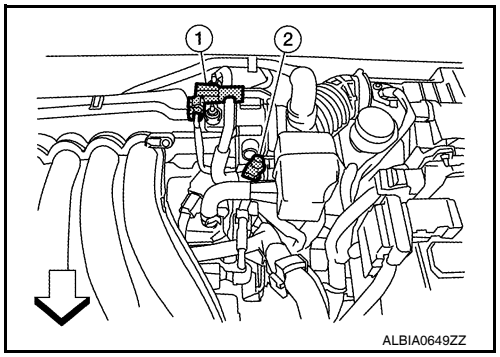

2. Set the pressure pump and a hose.
3. Also set the pressure pump with pressure gauge to the EVAP service port adapter.
4. Turn ignition switch ON.
5. Connect GST and select Service $08.
6. Using Service $08 control the EVAP canister vent control valve (close).
7. Apply pressure and make sure the following conditions are satisfied.
   Pressure to be applied: 2.7 kPa (20 mmHg, 0.79 inHg)
   Time to be waited after the pressure drawn in to the EVAP system and the pressure to be dropped: 60 seconds and the pressure should not be dropped more than 0.4 kPa (3 mmHg, 0.12 inHg).
   If NG, go to EC-400, "Diagnosis Procedure".
   If OK, go to next step.
8. Disconnect GST.
9. Start engine and warm it up to normal operating temperature.
10. Turn ignition switch OFF and wait at least 10 seconds.
11. Restart engine and let it idle for 90 seconds.
12. Keep engine speed at 2,000 rpm for 30 seconds.
13. Turn ignition switch OFF.
    NOTE:
    For more information, refer to GST Instruction Manual.

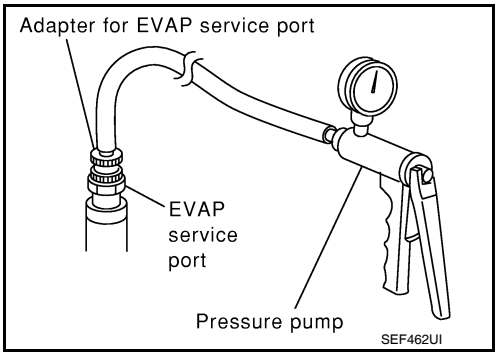

Diagnosis Procedure

INFOID:0000000005284893

1. CHECK FUEL FILLER CAP DESIGN

1. Turn ignition switch OFF.
2. Check for genuine NISSAN fuel filler cap design.

OK or NG

OK >> GO TO 2.
NG >> Replace with genuine NISSAN fuel filler cap.

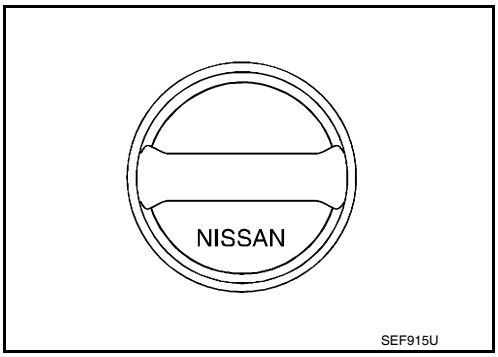

2. CHECK FUEL FILLER CAP INSTALLATION

Check that the cap is tightened properly by rotating the cap clockwise.

OK or NG

OK >> GO TO 3.
NG >> 1. Open fuel filler cap, then clean cap and fuel filler neck threads using air blower.
2. Retighten until reteaching sound is heard.

3. CHECK FUEL FILLER CAP FUNCTION

Check for air releasing sound while opening the fuel filler cap.

OK or NG

OK >> GO TO 5.
NG >> GO TO 4.

4. CHECK FUEL TANK VACUUM RELIEF VALVE

Refer to EC-47, "Component Inspection".

OK or NG

OK >> GO TO 5.
NG >> Replace fuel filler cap with a genuine one.

5. INSTALL THE PRESSURE PUMP

To locate the EVAP leak, install EVAP service port adapter and pressure pump to EVAP service port securely. For the location of EVAP service port (2), refer to EC-45, "Description".

- EVAP canister purge volume control solenoid valve (1)
- ⇦: Vehicle front

NOTE:
Improper installation of the EVAP service port adapter to the EVAP service port may cause leaking.

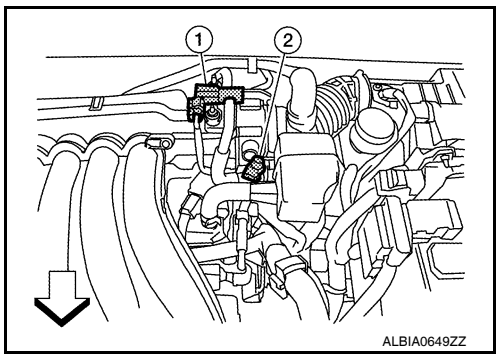

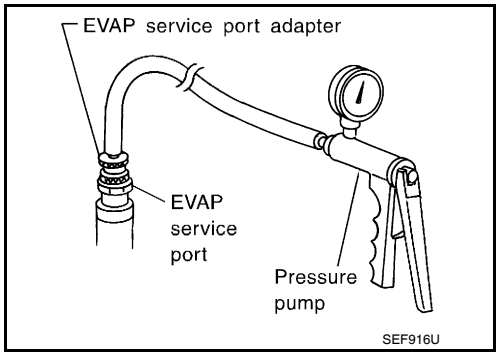

With CONSULT-III>>GO TO 6.
Without CONSULT-III>>GO TO 7.

6. CHECK FOR EVAP LEAK

With CONSULT-III

1. Turn ignition switch ON.
2. Select “EVAP SYSTEM CLOSE” of “WORK SUPPORT” mode with CONSULT-III.
3. Touch “START” and apply pressure into the EVAP line until the pressure indicator reaches the middle of the bar graph.
   CAUTION:
   - **Never use compressed air or a high pressure pump.**
   - **Do not exceed 4.12 kPa (0.042 kg/cm^2, 0.6 psi) of pressure in the system.**
4. Using EVAP leak detector, locate the EVAP leak. For the leak detector, refer to the instruction manual for more details.
   Refer to EC-45, "Description".

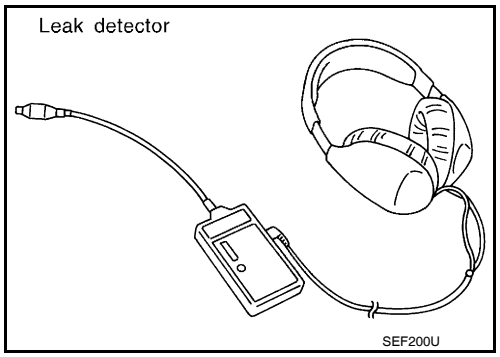

OK or NG

OK >> GO TO 8.
NG >> Repair or replace.

7. CHECK FOR EVAP LEAK

Without CONSULT-III

1. Turn ignition switch OFF.

2. Apply 12 V DC to EVAP canister vent control valve (3). The valve will close. (Continue to apply 12 V until the end of test.)
- This illustration is a view from under vehicle
- EVAP control system pressure sensor (1)
- EVAP canister (2)

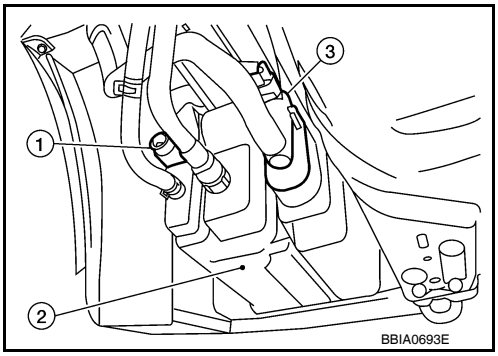

3. Pressurize the EVAP line using pressure pump with 1.3 to 2.7 kPa (10 to 20 mmHg, 0.39 to 0.79 inHg), then remove pump and EVAP service port adapter.
CAUTION:
- **Never use compressed air or a high pressure pump.**
- **Do not exceed 4.12 kPa (0.042 kg/cm^2, 0.6 psi) of pressure in the system.**

4. Using EVAP leak detector, locate the EVAP leak. For the leak detector, refer to the instruction manual for more details.
Refer to EC-45, "Description".

OK or NG

OK >> GO TO 8.
NG >> Repair or replace.

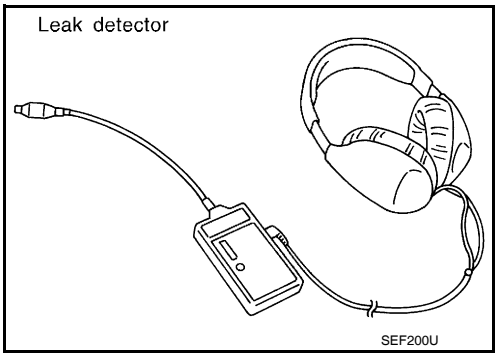

8. CHECK DRAIN FILTER

Refer to EC-405, "Component Inspection".

OK or NG

OK >> GO TO 9.
NG >> Replace drain filter.

9. CHECK EVAP CANISTER VENT CONTROL VALVE

Check the following.
- EVAP canister vent control valve is installed properly.
  Refer to EC-49, "Removal and Installation".
- EVAP canister vent control valve.
  Refer to EC-365, "Component Inspection".

OK or NG

OK >> GO TO 10.
NG >> Repair or replace EVAP canister vent control valve and O-ring.

10. CHECK IF EVAP CANISTER SATURATED WITH WATER

1. Remove EVAP canister with EVAP canister vent control valve and EVAP control system pressure sensor attached.

2. Does water drain from the EVAP canister?

Yes or No

Yes >> GO TO 11.
No (With CONSULT-III)>>GO TO 13.
No (Without CONSULT-III)>>GO TO 14.

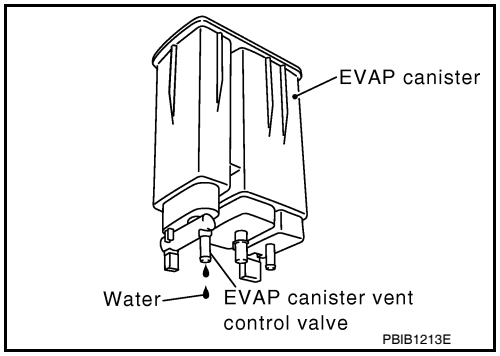

11. CHECK EVAP CANISTER

Weigh the EVAP canister with the EVAP canister vent control valve and EVAP control system pressure sensor attached.

The weight should be less than 1.9 kg (4.2 lb).

OK or NG

OK (With CONSULT-III)>>GO TO 13.
OK (Without CONSULT-III)>>GO TO 14.
NG >> GO TO 12.

12. DETECT MALFUNCTIONING PART

Check the following.
- EVAP canister for damage
- EVAP hose between EVAP canister and vehicle frame for clogging or poor connection

>> Repair hose or replace EVAP canister.

13. CHECK EVAP CANISTER PURGE VOLUME CONTROL SOLENOID VALVE OPERATION

With CONSULT-III

1. Disconnect vacuum hose to EVAP canister purge volume control solenoid valve at EVAP service port.
2. Start engine.
3. Perform “PURG VOL CONT/V” in “ACTIVE TEST” mode.
4. Touch “Qu” on CONSULT-III screen to increase “PURG VOL CONT/V” opening to 100%.
5. Check vacuum hose for vacuum when revving engine up to 2,000 rpm.

Vacuum should exist.

OK or NG

OK >> GO TO 16.
NG >> GO TO 15.

14. CHECK EVAP CANISTER PURGE VOLUME CONTROL SOLENOID VALVE OPERATION

Without CONSULT-III

1. Start engine and warm it up to normal operating temperature.
2. Stop engine.
3. Disconnect vacuum hose to EVAP canister purge volume control solenoid valve at EVAP service port.
4. Start engine and let it idle for at least 80 seconds.
5. Check vacuum hose for vacuum when revving engine up to 2,000 rpm.

Vacuum should exist.

OK or NG

OK >> GO TO 17.
NG >> GO TO 15.

15. CHECK VACUUM HOSE

Check vacuum hoses for clogging or disconnection. Refer to EC-121, "Vacuum Hose Drawing".

OK or NG

OK >> GO TO 16.
NG >> Repair or reconnect the hose.

16. CHECK EVAP CANISTER PURGE VOLUME CONTROL SOLENOID VALVE

Refer to EC-360, "Component Inspection".

OK or NG

OK >> GO TO 17.
NG >> Replace EVAP canister purge volume control solenoid valve.

17. CHECK FUEL TANK TEMPERATURE SENSOR

Refer to EC-290, "Component Inspection".

OK or NG

OK >> GO TO 18.
NG >> Replace fuel level sensor unit.

18. CHECK EVAP CONTROL SYSTEM PRESSURE SENSOR

Refer to EC-382, "Component Inspection".

OK or NG

OK >> GO TO 19.
NG >> Replace EVAP control system pressure sensor.

19. CHECK EVAP PURGE LINE

Check EVAP purge line (pipe, rubber tube, fuel tank and EVAP canister) for cracks or improper connection. Refer to EC-45, "Description".

OK or NG

OK >> GO TO 20.
NG >> Repair or reconnect the hose.

20. CLEAN EVAP PURGE LINE

Clean EVAP purge line (pipe and rubber tube) using air blower.

>> GO TO 21.

21. CHECK EVAP/ORVR LINE

Check EVAP/ORVR line between EVAP canister and fuel tank for clogging, kink, looseness and improper connection. For location, refer to EC-52.

OK or NG

OK >> GO TO 22.
NG >> Repair or replace hoses and tubes.

22. CHECK RECIRCULATION LINE

Check recirculation line between filler neck tube and fuel tank for clogging, kink, cracks, looseness and improper connection.

OK or NG

OK >> GO TO 23.
NG >> Repair or replace hose, tube or filler neck tube.

23. CHECK REFUELING EVAP VAPOR CUT VALVE

Refer to EC-55, "Component Inspection".

OK or NG

OK >> GO TO 24.
NG >> Replace refueling EVAP vapor cut valve with fuel tank.

24. CHECK FUEL LEVEL SENSOR

Refer to FL-6.

OK or NG

OK >> GO TO 25.

NG >> Replace fuel level sensor unit.

25. CHECK INTERMITTENT INCIDENT

Refer to EC-152.

>> **INSPECTION END**

Component Inspection

INFOID:0000000005284894

DRAIN FILTER

1. Check visually for insect nests in the drain filter air inlet.
2. Check visually for cracks or flaws in the appearance.
3. Check visually for cracks or flaws in the hose.
4. Blow air into port A and check that it flows freely out of port B.
5. Block port B.
6. Blow air into port A and check that there is no leakage.
7. If NG, replace drain filter.

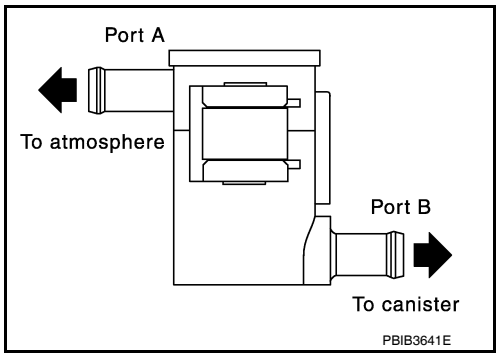

DTC P0460 FUEL LEVEL SENSOR

Component Description

INFOID:0000000005284895

The fuel level sensor (3) is mounted in the fuel level sensor unit. The sensor detects a fuel level in the fuel tank and transmits a signal to the combination meter. The combination meter sends the fuel level sensor signal to the ECM through CAN communication line.
It consists of two parts, one is mechanical float and the other is variable resistor. Fuel level sensor output voltage changes depending on the movement of the fuel mechanical float.

- Fuel level sensor unit and fuel pump (1)
- Fuel pressure regulator (2)
- Fuel tank temperature sensor (4)

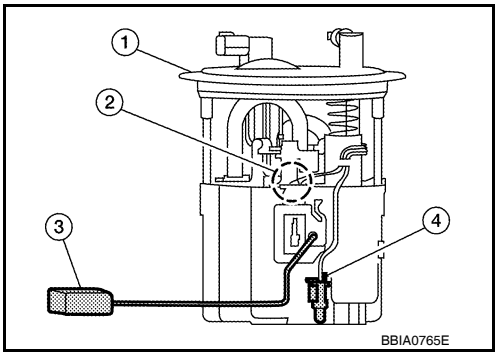

On Board Diagnosis Logic

INFOID:0000000005284896

NOTE:

- **If DTC P0460 is displayed with DTC UXXXX, first perform the trouble diagnosis for DTC UXXXX.**
- **If DTC P0460 is displayed with DTC P0607, first perform the trouble diagnosis for DTC P0607. Refer to EC-423.**

When the vehicle is parked, naturally the fuel level in the fuel tank is stable. It means that output signal of the fuel level sensor does not change. If ECM senses sloshing signal from the sensor, fuel level sensor malfunction is detected.

DTC No.	Trouble diagnosis name	DTC detecting condition	Possible cause
P0460 0460	Fuel level sensor circuit noise	Even though the vehicle is parked, a signal being varied is sent from the fuel level sensor to ECM.	• Harness or connectors (CAN communication line is open or shorted) • Harness or connectors (Fuel level sensor circuit is open or shorted) • Combination meter • Fuel level sensor

DTC Confirmation Procedure

INFOID:0000000005284897

NOTE:

If DTC Confirmation Procedure has been previously conducted, always turn ignition switch OFF and wait at least 10 seconds before conducting the next test.

1. Start engine and wait maximum of 2 consecutive minutes.
2. Check 1st trip DTC.
3. If 1st trip DTC is detected, go to EC-406, "Diagnosis Procedure".

Diagnosis Procedure

INFOID:0000000005284898

1. CHECK FUEL GAUGE OPERATION

Refer to DI-14, "Self-Diagnosis Mode of Combination Meter".

OK or NG

OK >> GO TO 2.
NG >> Follow the instruction of DI-14, "Self-Diagnosis Mode of Combination Meter".

2. CHECK FUEL LEVEL SENSOR AND CIRCUIT

Refer to DI-20, "Fuel Level Sensor Signal Inspection".

OK or NG

OK >> GO TO 3.
NG >> Repair or replace malfunctioning parts.

3. CHECK INTERMITTENT INCIDENT

Refer to EC-152.

>> **INSPECTION END**

Removal and Installation

INFOID:0000000005284899

FUEL LEVEL SENSOR

Refer to FL-6

DTC P0461 FUEL LEVEL SENSOR

Component Description

INFOID:0000000005284900

The fuel level sensor (3) is mounted in the fuel level sensor unit. The sensor detects a fuel level in the fuel tank and transmits a signal to the combination meter. The combination meter sends the fuel level sensor signal to the ECM through CAN communication line.
It consists of two parts, one is mechanical float and the other is variable resistor. Fuel level sensor output voltage changes depending on the movement of the fuel mechanical float.

- Fuel level sensor unit and fuel pump (1)
- Fuel pressure regulator (2)
- Fuel tank temperature sensor (4)

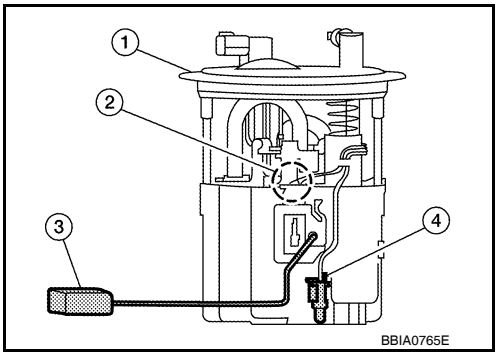

On Board Diagnosis Logic

INFOID:0000000005284901

NOTE:

- **If DTC P0461 is displayed with DTC UXXXX, first perform the trouble diagnosis for DTC UXXXX.**
- **If DTC P0461 is displayed with DTC P0607, first perform the trouble diagnosis for DTC P0607. Refer to EC-423.**
  This diagnosis detects the fuel gauge malfunction of the gauge not moving even after a long distance has been driven.Driving long distances naturally affect fuel gauge level.

DTC No.	Trouble diagnosis name	DTC detecting condition	Possible cause
P0461 0461	Fuel level sensor circuit range/performance	The output signal of the fuel level sensor does not change within the specified range even though the vehicle has been driven a long distance.	• Harness or connectors (CAN communication line is open or shorted) • Harness or connectors (Fuel level sensor circuit is open or shorted) • Combination meter • Fuel level sensor

Overall Function Check

INFOID:0000000005284902

Use this procedure to check the overall function of the fuel level sensor function. During this check, a 1st trip DTC might not be confirmed.

WARNING:
When performing following procedure, be sure to observe the handling of the fuel.
Refer to FL-10.
TESTING CONDITION:
Before starting overall function check, preparation of draining fuel and refilling fuel is required.

Diagnosis Procedure

INFOID:0000000005284903

1. CHECK FUEL GAUGE OPERATION

Refer to DI-14, "Self-Diagnosis Mode of Combination Meter".

OK or NG

OK >> GO TO 2.
NG >> Follow the instruction of DI-14, "Self-Diagnosis Mode of Combination Meter".

2. CHECK FUEL LEVEL SENSOR AND CIRCUIT

Refer to DI-20, "Fuel Level Sensor Signal Inspection".

OK or NG

OK >> GO TO 3.
NG >> Repair or replace malfunctioning parts.

3. CHECK INTERMITTENT INCIDENT

Refer to EC-152.

>> **INSPECTION END**

Removal and Installation

INFOID:0000000005284904

FUEL LEVEL SENSOR

Refer to FL-6.

DTC P0462, P0463 FUEL LEVEL SENSOR

Component Description

INFOID:0000000005284905

The fuel level sensor (3) is mounted in the fuel level sensor unit. The sensor detects a fuel level in the fuel tank and transmits a signal to the combination meter. The combination meter. sends the fuel level sensor signal to the ECM through CAN communication line.
It consists of two parts, one is mechanical float and the other is variable resistor. Fuel level sensor output voltage changes depending on the movement of the fuel mechanical float.

- Fuel level sensor unit and fuel pump (1)
- Fuel pressure regulator (2)
- Fuel tank temperature sensor (4)

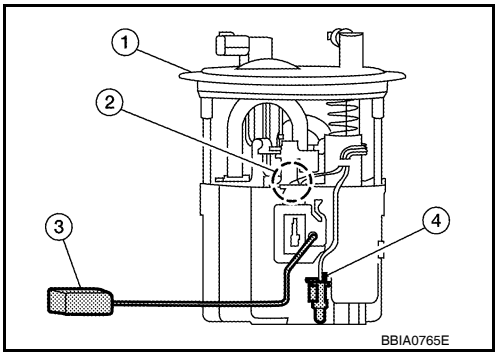

On Board Diagnosis Logic

INFOID:0000000005284906

NOTE:

- **If DTC P0462 or P0463 is displayed with DTC UXXXX, first perform the trouble diagnosis for DTC UXXXX.**
- **If DTC P0462 or P0463 is displayed with DTC P0607, first perform the trouble diagnosis for DTC P0607. Refer to EC-423.**

DTC No.	Trouble diagnosis name	DTC detecting condition	Possible cause
P0462 0462	Fuel level sensor circuit low input	An excessively low voltage from the sensor is sent to ECM.	• Harness or connectors (CAN communication line is open or shorted) • Harness or connectors (Fuel level sensor circuit is open or shorted) • Combination meter • Fuel level sensor
P0463 0463	Fuel level sensor circuit high input	An excessively high voltage from the sensor is sent to ECM.	

DTC Confirmation Procedure

INFOID:0000000005284907

NOTE:
If DTC Confirmation Procedure has been previously conducted, always turn ignition switch OFF and wait at least 10 seconds before conducting the next test.
TESTING CONDITION:
Before performing the following procedure, confirm that battery voltage is more than 11 V at ignition switch ON.

1. Turn ignition switch ON and wait at least 5 seconds.
2. Check 1st trip DTC.
3. If 1st trip DTC is detected, go to EC-410, "Diagnosis Procedure".

Diagnosis Procedure

INFOID:0000000005284908

1. CHECK FUEL GAUGE OPERATION

Refer to DI-14, "Self-Diagnosis Mode of Combination Meter".

OK or NG

OK >> GO TO 2.
NG >> Follow the instruction of DI-14, "Self-Diagnosis Mode of Combination Meter".

2. CHECK FUEL LEVEL SENSOR AND CIRCUIT

Refer to DI-20, "Fuel Level Sensor Signal Inspection".

OK or NG

OK >> GO TO 3.
NG >> Repair or replace malfunctioning parts.

3. CHECK INTERMITTENT INCIDENT

Refer to EC-152.

>> **INSPECTION END**

Removal and Installation

INFOID:0000000005284909

FUEL LEVEL SENSOR

Refer to FL-6.

DTC P0500 VSS

Description

INFOID:0000000005284910

NOTE:
- **If DTC P0500 is displayed with DTC UXXXX, first perform the trouble diagnosis for DTC UXXXX.**
- **If DTC P0500 is displayed with DTC P0607, first perform the trouble diagnosis for DTC P0607. Refer to EC-423.**

The vehicle speed signal is sent from “ABS actuator and electric unit (control unit)” or combination meter through CAN communication line.

On Board Diagnosis Logic

INFOID:0000000005284911

DTC No.	Trouble diagnosis name	DTC detecting condition	Possible cause
P0500 0500	Vehicle speed sensor	The vehicle speed signal sent to ECM is almost 0 km/h (0 MPH) even when vehicle is being driven.	• Harness or connectors (CAN communication line is open or shorted.) • Harness or connectors (Vehicle speed signal circuit is open or shorted) • ABS actuator and electric unit (control unit) • Combination meter

FAIL-SAFE MODE

When the malfunction is detected, ECM enters fail-safe mode.

Detected item	Engine operating condition in fail-safe mode
Vehicle speed sensor	The cooling fan operates (High) while engine is running.

DTC Confirmation Procedure

INFOID:0000000005284912

CAUTION:
Always drive vehicle at a safe speed.
NOTE:
If DTC Confirmation Procedure has been previously conducted, always turn ignition switch OFF and wait at least 10 seconds before conducting the next test.
TESTING CONDITION:
Steps 1 and 2 may be conducted with the drive wheels lifted in the shop or by driving the vehicle. If a road test is expected to be easier, it is unnecessary to lift the vehicle.

WITH CONSULT-III

1. Start engine.
2. Read “VHCL SPEED SE” in “DATA MONITOR” mode with CONSULT-III. The vehicle speed on CONSULT-III should exceed 10 km/h (6 MPH) when rotating wheels with suitable gear position.
   If NG, go to EC-413, "Diagnosis Procedure".
   If OK, go to following step.
3. Select “DATA MONITOR” mode with CONSULT-III.
4. Warm engine up to normal operating temperature.
5. Maintain the following conditions for at least 60 consecutive seconds.

ENG SPEED	More than 1,700 rpm (M/T) More than 1,300 rpm (CVT)
COOLAN TEMP/S	More than 70°C (158°F)
B/FUEL SCHDL	4.5 - 31.8 msec (M/T) 6.5 - 31.8 msec (CVT)
Shift lever	Suitable position
PW/ST SIGNAL	OFF

6. Check 1st trip DTC.

7. If 1st trip DTC is detected, go to EC-413, "Diagnosis Procedure".

Overall Function Check

INFOID:0000000005284913

Use this procedure to check the overall function of the vehicle speed signal circuit. During this check, a 1st trip DTC might not be confirmed.

WITH GST

1. Lift up drive wheels.
2. Start engine.
3. Read vehicle speed signal in Service $01 with GST.
   The vehicle speed signal on GST should be able to exceed 10 km/h (6 MPH) when rotating wheels with suitable gear position.
4. If NG, go to EC-413, "Diagnosis Procedure".

Diagnosis Procedure

INFOID:0000000005284914

1. CHECK DTC WITH “ABS ACTUATOR AND ELECTRIC UNIT (CONTROL UNIT)”

Refer to BRC-10.

OK or NG

OK >> GO TO 2.
NG >> Repair or replace.

2. CHECK COMBINATION METER

Refer to DI-6.

>> **INSPECTION END**

DTC P0506 ISC SYSTEM

Description

INFOID:0000000005284915

NOTE:
If DTC P0506 is displayed with other DTC, first perform the trouble diagnosis for the other DTC.
The ECM controls the engine idle speed to a specified level through the fine adjustment of the air, which is let into the intake manifold, by operating the electric throttle control actuator. The operating of the throttle valve is varied to allow for optimum control of the engine idling speed. The ECM calculates the actual engine speed from signals of crankshaft position sensor (POS) and camshaft position sensor (PHASE).
The ECM controls the electric throttle control actuator so that the engine speed coincides with the target value memorized in the ECM. The target engine speed is the lowest speed at which the engine can operate steadily. The optimum value stored in the ECM is determined by taking into consideration various engine conditions, such as during warming up, deceleration, and engine load (air conditioner, power steering and cooling fan operation, etc.).

On Board Diagnosis Logic

INFOID:0000000005284916

DTC No.	Trouble diagnosis name	DTC detecting condition	Possible cause
P0506 0506	Idle speed control system RPM lower than expected	The idle speed is less than the target idle speed by 100 rpm or more.	• Electric throttle control actuator • Intake air leak

DTC Confirmation Procedure

INFOID:0000000005284917

NOTE:
- If DTC Confirmation Procedure has been previously conducted, always turn ignition switch OFF and wait at least 10 seconds before conducting the next test.
- **If the target idle speed is out of the specified value, perform EC-99, "Idle Air Volume Learning", before conducting DTC Confirmation Procedure. For the target idle speed, refer to the EC-577.**

TESTING CONDITION:
- **Before performing the following procedure, confirm that battery voltage is more than 11 V at idle.**
- **Always perform the test at a temperature above –10°C (14°F).**

1. Start engine and warm it up to normal operating temperature.
2. Turn ignition switch OFF and wait at least 10 seconds.
3. Start engine and run it for at least 1 minute at idle speed.
4. Check 1st trip DTC.
5. If 1st trip DTC is detected, go to EC-414, "Diagnosis Procedure".

Diagnosis Procedure

INFOID:0000000005284918

1. CHECK INTAKE AIR LEAK

1. Start engine and let it idle.
2. Listen for an intake air leak after the mass air flow sensor.

OK or NG

OK >> GO TO 2.
NG >> Discover air leak location and repair.

2. REPLACE ECM

1. Stop engine.
2. Replace ECM.
3. Perform initialization of NVIS (NATS) system and registration of all NVIS (NATS) ignition key IDs.
   Refer to BL-171, "ECM Re-communicating Function".
4. Perform EC-99, "VIN Registration".
5. Perform EC-99, "Accelerator Pedal Released Position Learning".
6. Perform EC-99, "Throttle Valve Closed Position Learning".
7. Perform EC-99, "Idle Air Volume Learning".

>> **INSPECTION END**

DTC P0507 ISC SYSTEM

Description

INFOID:0000000005284919

NOTE:
If DTC P0507 is displayed with other DTC, first perform the trouble diagnosis for the other DTC.
The ECM controls the engine idle speed to a specified level through the fine adjustment of the air, which is let into the intake manifold, by operating the electric throttle control actuator. The operating of the throttle valve is varied to allow for optimum control of the engine idling speed. The ECM calculates the actual engine speed from signals of camshaft position sensor (POS) and camshaft position sensor (PHASE).
The ECM controls the electric throttle control actuator so that the engine speed coincides with the target value memorized in the ECM. The target engine speed is the lowest speed at which the engine can operate steadily. The optimum value stored in the ECM is determined by taking into consideration various engine conditions, such as during warming up, deceleration, and engine load (air conditioner, power steering and cooling fan operation, etc.).

On Board Diagnosis Logic

INFOID:0000000005284920

DTC No.	Trouble diagnosis name	DTC detecting condition	Possible cause
P0507 0507	Idle speed control system RPM higher than expected	The idle speed is more than the target idle speed by 200 rpm or more.	• Electric throttle control actuator • Intake air leak • PCV system

DTC Confirmation Procedure

INFOID:0000000005284921

NOTE:
- If DTC Confirmation Procedure has been previously conducted, always turn ignition switch OFF and wait at least 10 seconds before conducting the next test.
- **If the target idle speed is out of the specified value, perform EC-99, "Idle Air Volume Learning", before conducting DTC Confirmation Procedure. For the target idle speed, refer to the EC-577.**

TESTING CONDITION:
- **Before performing the following procedure, confirm that battery voltage is more than 11 V at idle.**
- **Always perform the test at a temperature above –10°C (14°F).**

1. Start engine and warm it up to normal operating temperature.
2. Turn ignition switch OFF and wait at least 10 seconds.
3. Start engine and run it for at least 1 minute at idle speed.
4. Check 1st trip DTC.
5. If 1st trip DTC is detected, go to EC-416, "Diagnosis Procedure".

Diagnosis Procedure

INFOID:0000000005284922

1. CHECK PCV HOSE CONNECTION

Confirm that PCV hose is connected correctly.

OK or NG

OK >> GO TO 2.
NG >> Repair or replace.

2. CHECK INTAKE AIR LEAK

1. Start engine and let it idle.
2. Listen for an intake air leak after the mass air flow sensor.

OK or NG

OK >> GO TO 3.
NG >> Discover air leak location and repair.

3. REPLACE ECM

1. Stop engine.
2. Replace ECM.

3. Perform initialization of NVIS (NATS) system and registration of all NVIS (NATS) ignition key IDs. Refer to BL-171, "ECM Re-communicating Function".
4. Perform EC-99, "VIN Registration".
5. Perform EC-99, "Accelerator Pedal Released Position Learning".
6. Perform EC-99, "Throttle Valve Closed Position Learning".
7. Perform EC-99, "Idle Air Volume Learning".

>> **INSPECTION END**

DTC P0603 ECM POWER SUPPLY

Component Description

INFOID:0000000005284923

Battery voltage is supplied to the ECM even when the ignition switch is turned OFF for the ECM memory function of the DTC memory, the air-fuel ratio feedback compensation value memory, the Idle Air Volume Learning value memory, etc.

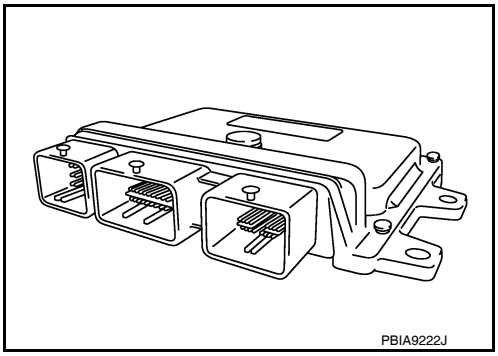

On Board Diagnosis Logic

INFOID:0000000005284924

DTC No.	Trouble diagnosis name	DTC detecting condition	Possible cause
P0603 0603	ECM power supply circuit	ECM back-up RAM system does not function properly.	• Harness or connectors [The ECM power supply (back-up) circuit is open or shorted.] • ECM

DTC Confirmation Procedure

INFOID:0000000005284925

NOTE:
If DTC Confirmation Procedure has been previously conducted, always turn ignition switch OFF and wait at least 10 seconds before conducting the next test.

1. Turn ignition switch ON and wait at least 10 seconds.
2. Turn ignition switch OFF and wait at least 5 minutes.
3. Turn ignition switch ON and wait at least 10 seconds.
4. Repeat steps 2 and 3 for five times.
5. Check 1st trip DTC.
6. If 1st trip DTC is detected, go to EC-420, "Diagnosis Procedure".

Wiring Diagram

INFOID:0000000005284926

EC-ECM/PW-01

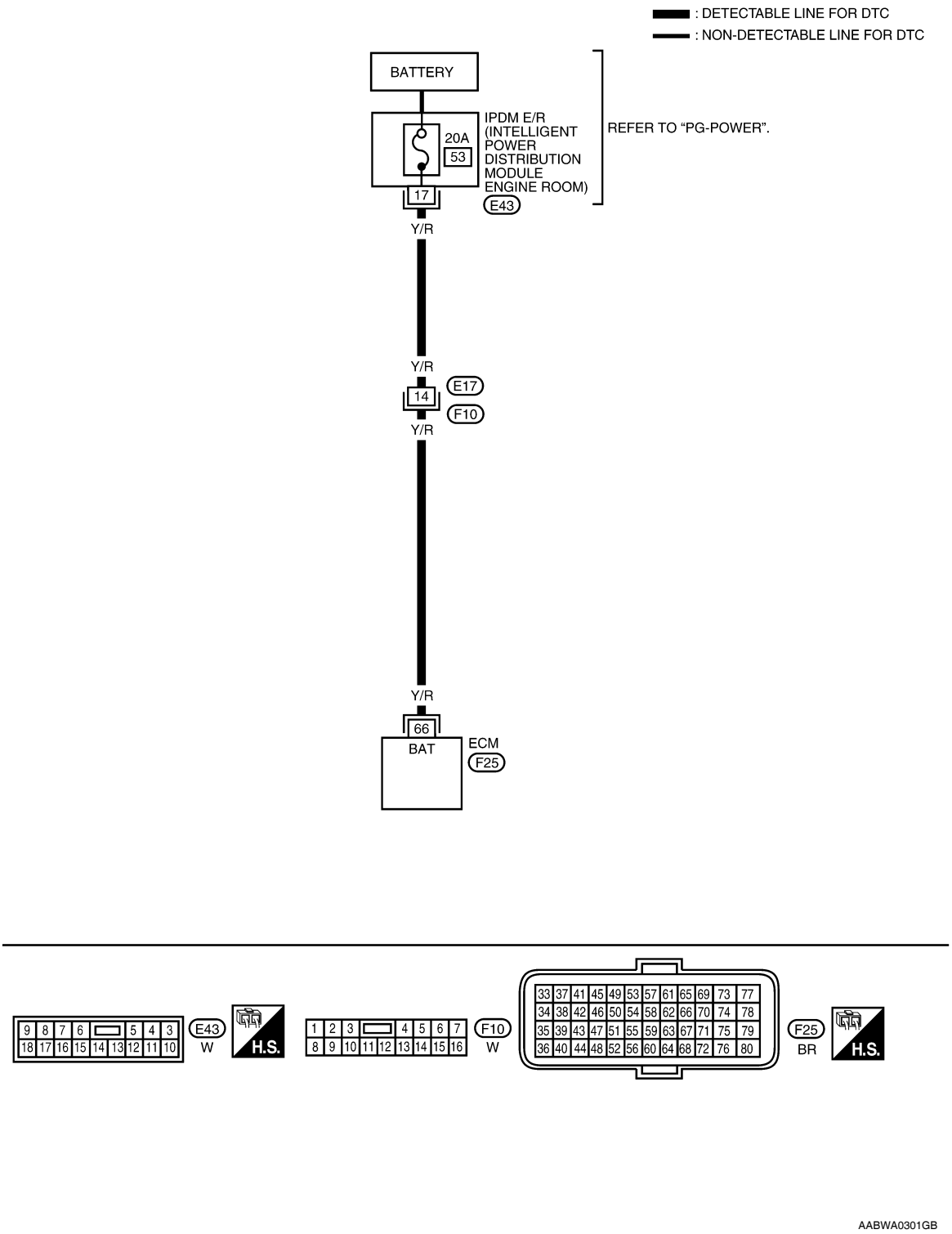

Specification data are reference values and are measured between each terminal and ground.

CAUTION:

Do not use ECM ground terminals when measuring input/output voltage. Doing so may result in damage to the ECM's transistor. Use a ground other than ECM terminals, such as the ground.

TER-MI-NAL NO.	WIRE COLOR	ITEM	CONDITION	DATA (DC Voltage)
66	Y/R	Power supply for ECM (Back-up)	**[Ignition switch: OFF]**	BATTERY VOLTAGE (11 - 14 V)

Diagnosis Procedure

INFOID:0000000005284927

1. CHECK ECM POWER SUPPLY

1. Turn ignition switch OFF.
2. Check voltage between ECM terminal 66 and ground with CONSULT-III or tester.

Voltage: Battery voltage

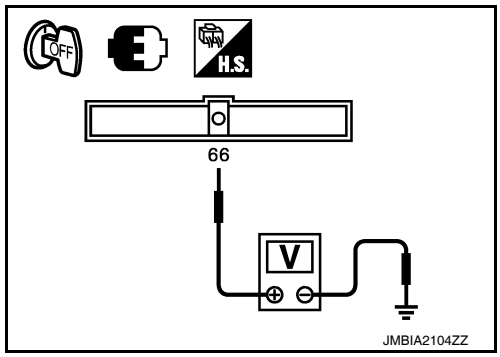

OK or NG

OK >> GO TO 3.
NG >> GO TO 2.

2. DETECT MALFUNCTIONING PART

Check the following.
- Harness connectors E17, F10
- 20 A fuse
- Harness for open or short between ECM and battery

>> Repair or replace harness or connectors.

3. CHECK INTERMITTENT INCIDENT

Refer to EC-152.

OK or NG

OK >> GO TO 4.
NG >> Repair or replace harness or connectors.

4. PERFORM DTC CONFIRMATION PROCEDURE

1. Erase DTC.
2. Perform DTC Confirmation Procedure.
   See EC-418, "DTC Confirmation Procedure".
3. Is the 1st trip DTC P0603 displayed again?

Yes or No

Yes >> GO TO 5.
No >> **INSPECTION END**

5. REPLACE ECM

1. Replace ECM.
2. Perform initialization of NVIS (NATS) system and registration of all NVIS (NATS) ignition key IDs.
   Refer to BL-171, "ECM Re-communicating Function".
3. Perform EC-99, "VIN Registration".
4. Perform EC-99, "Accelerator Pedal Released Position Learning".
5. Perform EC-99, "Throttle Valve Closed Position Learning".
6. Perform EC-99, "Idle Air Volume Learning".

>> **INSPECTION END**

DTC P0605 ECM

Component Description

INFOID:0000000005284928

The ECM consists of a microcomputer and connectors for signal input and output and for power supply. The ECM controls the engine.

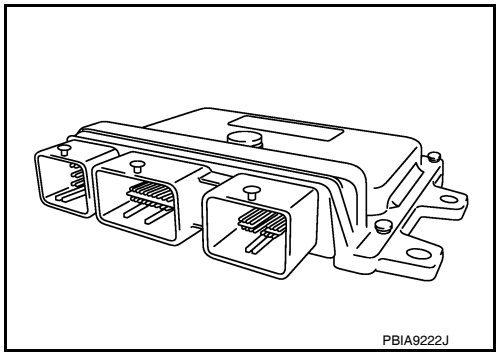

On Board Diagnosis Logic

INFOID:0000000005284929

This self-diagnosis has one or two trip detection logic.

DTC No.	Trouble diagnosis name	DTC detecting condition		Possible cause
P0605 0605	Engine control module	A)	ECM calculation function is malfunctioning.	• ECM
		B)	ECM EEP-ROM system is malfunctioning.	
		C)	ECM self shut-off function is malfunctioning.	

FAIL-SAFE MODE

ECM enters fail-safe mode when malfunction A is detected.

Detected items	Engine operation condition in fail-safe mode
Malfunction A	• ECM stops the electric throttle control actuator control, throttle valve is maintained at a fixed opening (approx. 5 degrees) by the return spring. • ECM deactivates ASCD operation.

DTC Confirmation Procedure

INFOID:0000000005284930

Perform PROCEDURE FOR MALFUNCTION A first. If the 1st trip DTC cannot be confirmed, perform PROCEDURE FOR MALFUNCTION B. If there is no malfunction on PROCEDURE FOR MALFUNCTION B, perform PROCEDURE FOR MALFUNCTION C.

NOTE:

If DTC Confirmation Procedure has been previously conducted, always turn ignition switch OFF and wait at least 10 seconds before conducting the next test.

PROCEDURE FOR MALFUNCTION A

1. Turn ignition switch ON.
2. Check 1st trip DTC.
3. If 1st trip DTC is detected, go to EC-422, "Diagnosis Procedure".

PROCEDURE FOR MALFUNCTION B

1. Turn ignition switch ON and wait at least 1 second.
2. Turn ignition switch OFF, wait at least 10 seconds and then turn ON.
3. Check 1st trip DTC.
4. If 1st trip DTC is detected, go to EC-422, "Diagnosis Procedure".

PROCEDURE FOR MALFUNCTION C

1. Turn ignition switch ON and wait at least 1 second.
2. Turn ignition switch OFF, wait at least 10 seconds and then turn ON.
3. Repeat step 2 for 32 times.

4. Check 1st trip DTC.
5. If 1st trip DTC is detected, go to EC-422, "Diagnosis Procedure".

Diagnosis Procedure

INFOID:0000000005284931

1. INSPECTION START

1. Erase DTC.
2. **Perform DTC Confirmation Procedure.**
   See EC-421, "DTC Confirmation Procedure".
3. Is the 1st trip DTC P0605 displayed again?

Yes or No

Yes >> GO TO 2.
No >> **INSPECTION END**

2. REPLACE ECM

1. Replace ECM.
2. Perform initialization of NVIS(NATS) system and registration of all NVIS(NATS) ignition key IDs.
   Refer to BL-171, "ECM Re-communicating Function".
3. Perform EC-99, "VIN Registration".
4. Perform EC-99, "Accelerator Pedal Released Position Learning".
5. Perform EC-99, "Throttle Valve Closed Position Learning".
6. Perform EC-99, "Idle Air Volume Learning".

>> **INSPECTION END**

DTC P0607 ECM

Description

INFOID:0000000005284932

CAN (Controller Area Network) is a serial communication line for real time application. It is an on-vehicle multiplex communication line with high data communication speed and excellent error detection ability. Many electronic control units are equipped onto a vehicle, and each control unit shares information and links with other control units during operation (not independent). In CAN communication, control units are connected with 2 communication lines (CAN H line, CAN L line) allowing a high rate of information transmission with less wiring. Each control unit transmits/receives data but selectively reads required data only.

On Board Diagnosis Logic

INFOID:0000000005284933

This self-diagnosis has the one trip detection logic (CVT).
The MIL will not light up for this self-diagnosis (M/T).

DTC No.	Trouble diagnosis name	DTC detecting condition	Possible cause
P0607 0607	CAN communication bus	When detecting error during the initial diagnosis for CAN controller of each control unit.	• ECM

DTC Confirmation Procedure

INFOID:0000000005284934

1. Turn ignition switch ON.
2. Check 1st trip DTC.
3. If 1st trip DTC is detected, go to EC-423, "Diagnosis Procedure".

Diagnosis Procedure

INFOID:0000000005284935

1. INSPECTION START

1. Erase DTC.
2. Perform DTC Confirmation Procedure.
   See EC-423, "DTC Confirmation Procedure".
3. Is the 1st trip DTC P0607 displayed again?

Yes or No

Yes >> GO TO 2.
No >> **INSPECTION END**

2. REPLACE ECM

1. Replace ECM.
2. Perform initialization of NVIS (NATS) system and registration of all NVIS (NATS) ignition key IDs.
   Refer to BL-171, "ECM Re-communicating Function".
3. Perform EC-99, "VIN Registration".
4. Perform EC-99, "Accelerator Pedal Released Position Learning".
5. Perform EC-99, "Throttle Valve Closed Position Learning".
6. Perform EC-99, "Idle Air Volume Learning".

>> **INSPECTION END**

DTC P0643 SENSOR POWER SUPPLY

On Board Diagnosis Logic

INFOID:0000000005284936

This self-diagnosis has the one trip detection logic.

DTC No.	Trouble diagnosis name	DTC detecting condition	Possible cause
P0643 0643	Sensor power supply circuit short	ECM detects a voltage of power source for sensor is excessively low or high.	• Harness or connectors (APP sensor 1 circuit is shorted.) (Throttle position sensor circuit is shorted.) [Camshaft position sensor (PHASE) circuit is shorted.] • Accelerator pedal position sensor • Throttle position sensor • Camshaft position sensor (PHASE)

FAIL-SAFE MODE

When the malfunction is detected, ECM enters fail-safe mode and the MIL lights up.

Engine operation condition in fail-safe mode
ECM stops the electric throttle control actuator control, throttle valve is maintained at a fixed opening (approx. 5 degrees) by the return spring.

DTC Confirmation Procedure

INFOID:0000000005284937

NOTE:
If DTC Confirmation Procedure has been previously conducted, always turn ignition switch OFF and wait at least 10 seconds before conducting the next test.

TESTING CONDITION:
Before performing the following procedure, confirm that battery voltage is more than 8 V at idle.

1. Start engine and let it idle for 1 second.
2. Check DTC.
3. If DTC is detected, go to EC-426, "Diagnosis Procedure".

Wiring Diagram

INFOID:0000000005284938

EC-SEN/PW-01

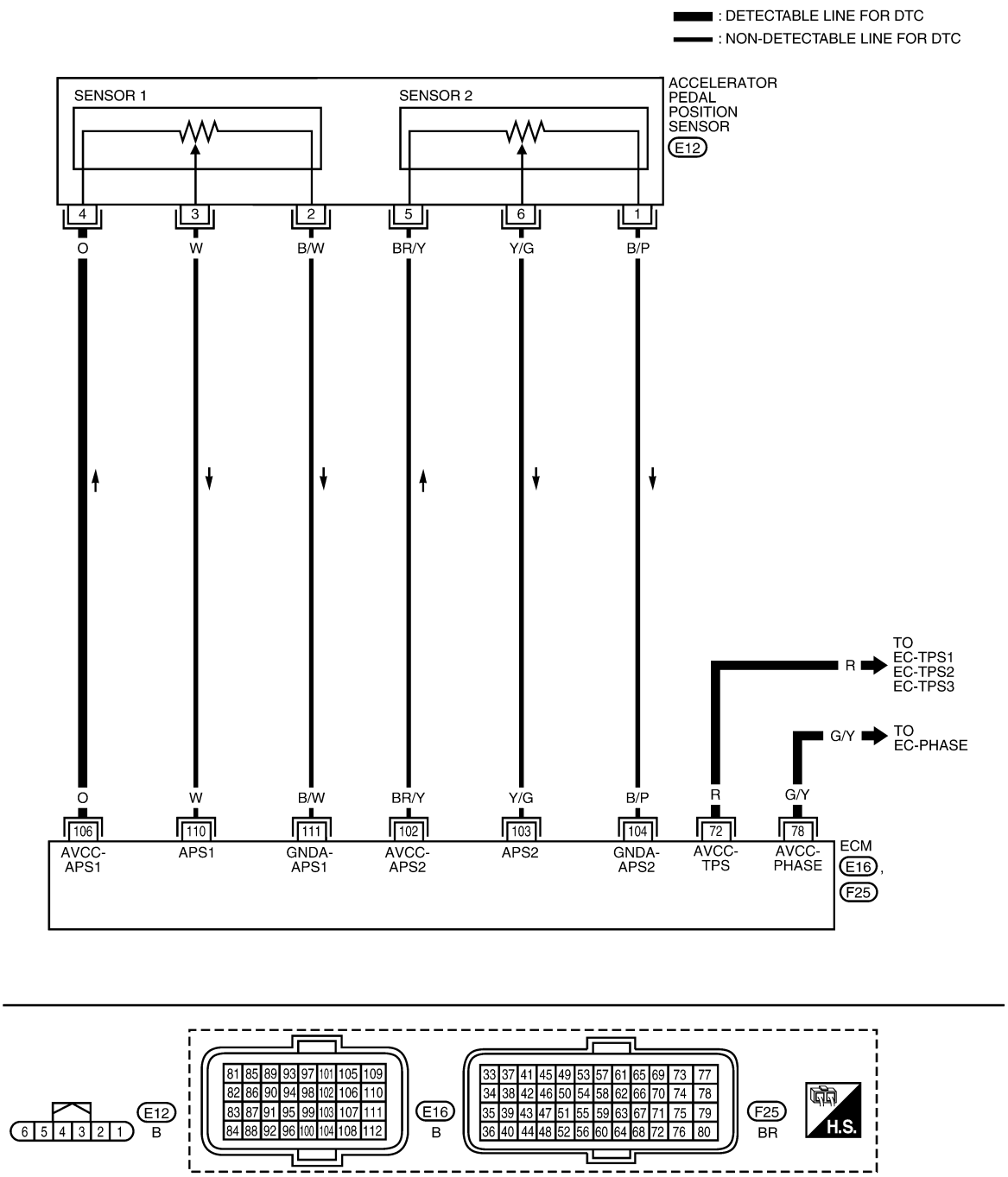

Specification data are reference values and are measured between each terminal and ground.

CAUTION:

Do not use ECM ground terminals when measuring input/output voltage. Doing so may result in damage to the ECM's transistor. Use a ground other than ECM terminals, such as the ground.

TERMINAL NO.	WIRE COLOR	ITEM	CONDITION	DATA (DC Voltage)
72	R	Sensor power supply (Throttle position sensor)	**[Ignition switch: ON]**	Approximately 5 V
78	G/Y	Sensor power supply [Camshaft position sensor (PHASE)]	**[Ignition switch: ON]**	Approximately 5 V
102	BR/Y	Sensor power supply (APP sensor 2)	**[Ignition switch: ON]**	Approximately 5 V
103	Y/G	Accelerator pedal position sensor 2	**[Ignition switch: ON]** • Engine stopped • Accelerator pedal: Fully released	0.3 - 0.6 V
			[Ignition switch: ON] • Engine stopped • Accelerator pedal: Fully depressed	1.95 - 2.4 V
104	B/P	Sensor ground (APP sensor 2)	**[Engine is running]** • **Warm-up condition** • Idle speed	Approximately 0 V
106	O	Sensor power supply (APP sensor 1)	**[Ignition switch: ON]**	Approximately 5 V
110	W	Accelerator pedal position sensor 1	**[Ignition switch: ON]** • Engine stopped • Accelerator pedal: Fully released	0.6 - 0.9 V
			[Ignition switch: ON] • Engine stopped • Accelerator pedal: Fully depressed	3.9 - 4.7 V
111	B/W	Sensor ground (APP sensor 1)	**[Engine is running]** • **Warm-up condition** • Idle speed	Approximately 0 V

Diagnosis Procedure

INFOID:0000000005284939

1. CHECK GROUND CONNECTIONS

1. Turn ignition switch OFF.
2. Loosen and retighten ground screws on the body.
   Refer to EC-157, "Ground Inspection".

- ⇦ : Vehicle front
- Body ground (1)

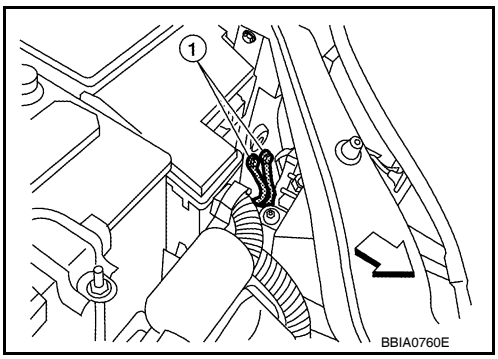

OK or NG

OK >> GO TO 2.
NG >> Repair or replace ground connections.

2. CHECK ACCELERATOR PEDAL POSITION SENSOR 1 POWER SUPPLY CIRCUIT

1. Disconnect accelerator pedal position (APP) sensor (1) harness connector.
2. Turn ignition switch ON.

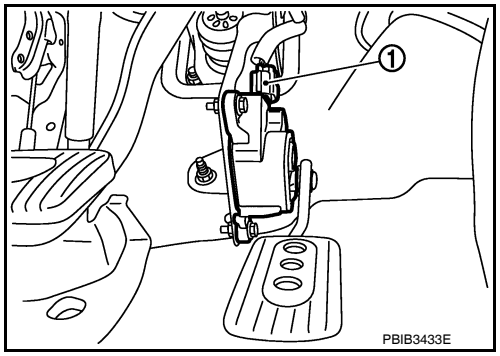

3. Check voltage between APP sensor terminal 4 and ground with CONSULT-III or tester.

Voltage: Approximately 5 V

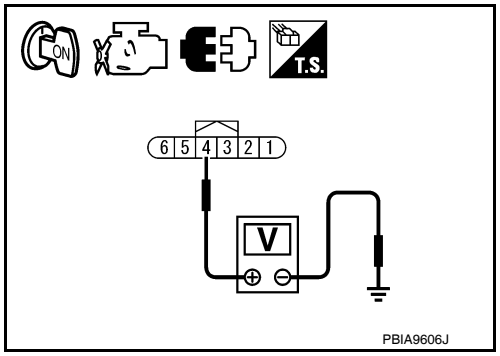

OK or NG

OK >> GO TO 7.
NG >> GO TO 3.

3. CHECK SENSOR POWER SUPPLY CIRCUITS

Check harness for short to power and short to ground, between the following terminals.

ECM terminal	Sensor terminal	Reference Wiring Diagram
72	Throttle position sensor terminal 1	EC-520, "Wiring Diagram"
78	Camshaft position sensor (PHASE) terminal 1	EC-325, "Wiring Diagram"
106	APP sensor terminal 4	EC-425, "Wiring Diagram"

OK or NG

OK >> GO TO 4.
NG >> Repair short to ground or short to power in harness or connectors.

4. CHECK CAMSHAFT POSITION SENSOR (PHASE)

Refer to EC-328, "Component Inspection".

OK or NG

OK >> GO TO 5.
NG >> Replace camshaft position sensor (PHASE).

5. CHECK THROTTLE POSITION SENSOR

Refer to EC-522, "Component Inspection".

OK or NG

OK >> GO TO 9.
NG >> GO TO 6.

6. REPLACE ELECTRIC THROTTLE CONTROL ACTUATOR

1. Replace the electric throttle control actuator.
2. Perform EC-99, "Throttle Valve Closed Position Learning".
3. Perform EC-99, "Idle Air Volume Learning".

>> **INSPECTION END**

7. CHECK APP SENSOR

Refer to EC-530, "Component Inspection".

OK or NG

OK >> GO TO 9.
NG >> GO TO 8.

8. REPLACE ACCELERATOR PEDAL ASSEMBLY

1. Replace accelerator pedal assembly.
2. Perform EC-99, "Accelerator Pedal Released Position Learning".
3. Perform EC-99, "Throttle Valve Closed Position Learning".
4. Perform EC-99, "Idle Air Volume Learning".

>> **INSPECTION END**

9. CHECK INTERMITTENT INCIDENT

Refer to EC-152.

>> **INSPECTION END**

DTC P0850 PNP SWITCH

Component Description

INFOID:0000000005284940

When the shift lever position is Neutral, park/neutral position (PNP) switch is ON. (M/T)
When the shift lever position is P or N, transmission range switch is ON. (CVT)
ECM detects the position because the continuity of the line (the ON signal) exists.

CONSULT-III Reference Value in Data Monitor Mode

INFOID:0000000005284941

Specification data are reference values.

Monitor item	Condition		Specification
P/N POSI SW	• Ignition switch: ON	Shift lever: P or N (CVT), Neutral (M/T)	ON
		Shift lever: Except above	OFF

On Board Diagnosis Logic

INFOID:0000000005284942

DTC No.	Trouble diagnosis name	DTC detecting condition	Possible cause
P0850 0850	Park/neutral position switch	The signal of the park/neutral position (PNP) signal is not changed in the process of engine starting and driving.	• Harness or connectors [Park/neutral position (PNP) signal circuit is open or shorted.] • Park/neutral position (PNP) switch (M/T) • Transmission range switch (CVT)

DTC Confirmation Procedure

INFOID:0000000005284943

CAUTION:
Always drive vehicle at a safe speed.
NOTE:
If DTC Confirmation Procedure has been previously conducted, always turn ignition switch OFF and wait at least 10 seconds before conducting the next test.

WITH CONSULT-III

1. Turn ignition switch ON.
2. Select “P/N POSI SW” in “DATA MONITOR” mode with CONSULT-III. Then check the “P/N POSI SW” signal under the following conditions.

Position (Shift lever)	Known-good signal
N or P position (CVT) Neutral position (M/T)	ON
Except above	OFF

If NG, go to EC-432, "Diagnosis Procedure".
If OK, go to following step.

3. Select “DATA MONITOR” mode with CONSULT-III.
4. Start engine and warm it up to normal operating temperature.
5. Maintain the following conditions for at least 60 consecutive seconds.

ENG SPEED	More than 1,100 rpm (CVT) More than 1,500 rpm (M/T)
COOLAN TEMP/S	More than 70°C (158°F)
B/FUEL SCHDL	2.0 - 31.8 msec
VHCL SPEED SE	More than 64km/h (29 MPH)
Shift lever	Suitable position

6. Check 1st trip DTC.

7. If 1st trip DTC is detected, go to EC-432, "Diagnosis Procedure".

Overall Function Check

INFOID:0000000005284944

Use this procedure to check the overall function of the park/neutral position (PNP) signal circuit. During this check, a 1st trip DTC might not be confirmed.

WITH GST

1. Turn ignition switch ON.
2. Check voltage between ECM terminal 14 (PNP signal) and ground under the following conditions.

Condition (Shift lever)	Voltage (Known-good data)
P or N position (CVT) Neutral position (M/T)	BATTERY VOLTAGE (11 - 14 V)
Except above	Approx. 0

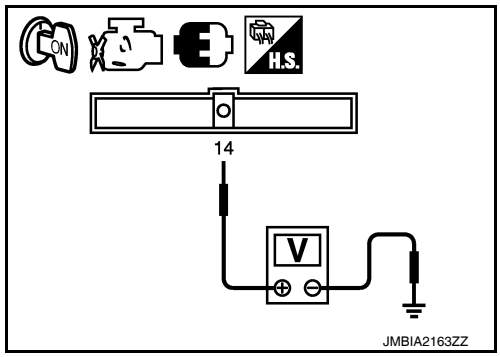

3. If NG, go to EC-432, "Diagnosis Procedure".

Wiring Diagram

INFOID:0000000005284945

EC-PNP/SW-01

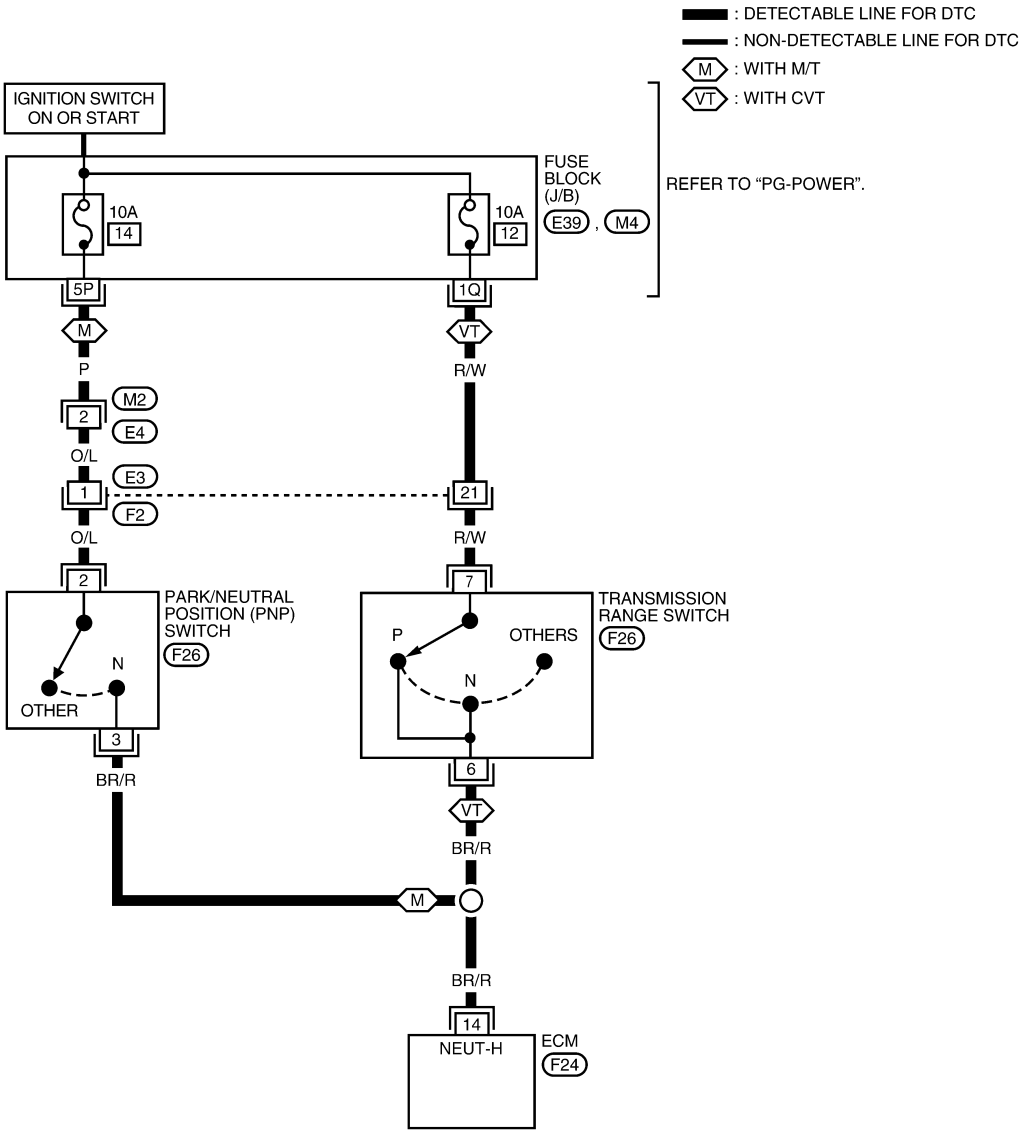

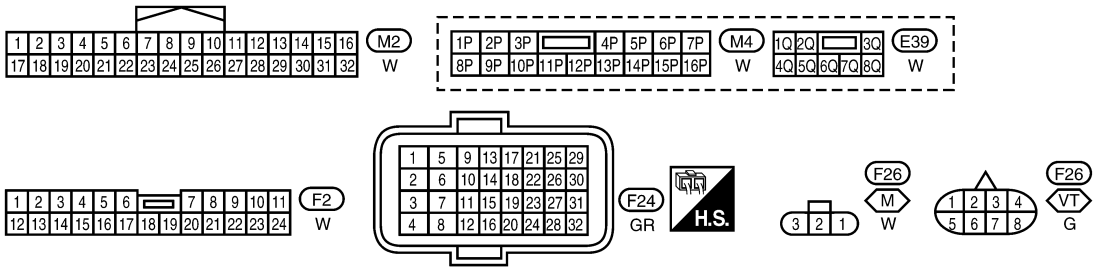

ABBWA0222GB

Specification data are reference values and are measured between each terminal and ground.

CAUTION:

Do not use ECM ground terminals when measuring input/output voltage. Doing so may result in damage to the ECM's transistor. Use a ground other than ECM terminals, such as the ground.

TERMINAL NO.	WIRE COLOR	ITEM	CONDITION	DATA (DC Voltage)
14	BR/R	PNP signal	**[Ignition switch: ON]** • Shift lever: P or N (CVT), Neutral (M/T)	BATTERY VOLTAGE (11 - 14 V)
			[Ignition switch: ON] • Except above	Approximately 0 V

Diagnosis Procedure

INFOID:0000000005284946

M/T MODELS

1. CHECK PNP SWITCH POWER SUPPLY CIRCUIT

1. Turn ignition switch OFF.
2. Disconnect PNP switch harness connector.
3. Turn ignition switch ON.
4. Check voltage between PNP switch terminal 2 and ground with CONSULT-III or tester.

Voltage: Battery voltage

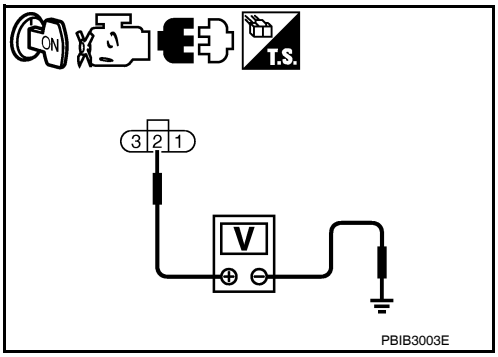

OK or NG

OK >> GO TO 3.
NG >> GO TO 2.

2. DETECT MALFUNCTIONING PART

Check the following.
- Harness connectors M2, E4
- Harness connectors E3, F2
- 10 A fuse
- Harness for open or short between PNP switch and fuse

>> Repair open circuit or short to ground or short to power in harness or connectors.

3. CHECK PNP SWITCH INPUT SIGNAL CIRCUIT FOR OPEN AND SHORT

1. Turn ignition switch OFF.
2. Disconnect ECM harness connector.
3. Check harness continuity between PNP switch terminal 3 and ECM terminal 14.
   Refer to Wiring Diagram.

Continuity should exist.

4. Also check harness for short to ground and short to power.

OK or NG

OK >> GO TO 4.
NG >> Repair open circuit or short to ground or short to power in harness or connectors.

4. CHECK PNP SWITCH

Refer to MT-14.

OK or NG

OK >> GO TO 5.
NG >> Replace PNP switch.

5. CHECK INTERMITTENT INCIDENT

Refer to EC-152.

>> **INSPECTION END**

CVT MODELS

1. CHECK TRANSMISSION RANGE SWITCH POWER SUPPLY CIRCUIT

1. Turn ignition switch OFF.
2. Disconnect transmission range switch harness connector.
3. Turn ignition switch ON.
4. Check voltage between transmission range switch terminal 7 and ground with CONSULT-III or tester.

Voltage: Battery voltage

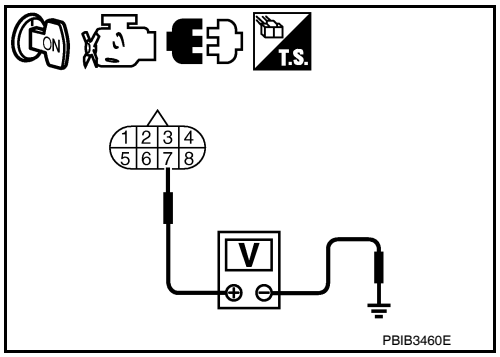

OK or NG

OK >> GO TO 3.
NG >> GO TO 2.

2. DETECT MALFUNCTIONING PART

Check the following.
- Harness connectors E3, F2
- 10 A fuse
- Harness for open or short between transmission range switch and fuse

>> Repair open circuit or short to ground or short to power in harness or connectors.

3. CHECK PNP INPUT SIGNAL CIRCUIT FOR OPEN AND SHORT

1. Turn ignition switch OFF.
2. Disconnect ECM harness connector.
3. Check harness continuity between transmission range switch terminal 6 and ECM terminal 14. Refer to Wiring Diagram.

Continuity should exist.

4. Also check harness for short to ground and short to power.

OK or NG

OK >> GO TO 4.
NG >> Repair open circuit or short to ground or short to power in harness or connectors.

4. CHECK TRANSMISSION RANGE SWITCH

Refer to CVT-60.

OK or NG

OK >> GO TO 5.
NG >> Replace transmission range switch.

5. CHECK INTERMITTENT INCIDENT

Refer to EC-152.

>> **INSPECTION END**

DTC P1148 CLOSED LOOP CONTROL

On Board Diagnosis Logic

INFOID:0000000005284947

This self-diagnosis has the one trip detection logic.

DTC No.	Trouble diagnosis name	DTC detecting condition	Possible cause
P1148 1148	Closed loop control function	The closed loop control function does not operate even when vehicle is driving in the specified condition.	• Harness or connectors [Air fuel ratio (A/F) sensor 1 circuit is open or shorted.] • Air fuel ratio (A/F) sensor 1 • Air fuel ratio (A/F) sensor 1 heater

NOTE:
DTC P1148 is displayed with another DTC for air fuel ratio (A/F) sensor 1.
Perform the trouble diagnosis for the corresponding DTC.

DTC P1212 TCS COMMUNICATION LINE

Description

INFOID:0000000005485511

NOTE:
- **If DTC P1212 is displayed with DTC U1001, first perform the trouble diagnosis for DTC U1001. Refer to EC-163.**
- **If DTC P1212 is displayed with DTC P0607, first perform the trouble diagnosis for DTC P0607. Refer to EC-423.**

This CAN communication line is used to control the smooth engine operation during the TCS operation. Pulse signals are exchanged between ECM and “ABS actuator and electric unit (control unit)”.
Be sure to erase the malfunction information such as DTC not only for “ABS actuator and electric unit (control unit)” but also for ECM after TCS related repair.

On Board Diagnosis Logic

INFOID:0000000005485512

Freeze frame data is not stored in the ECM for this self-diagnosis.
The MIL will not light up for this self-diagnosis.

DTC No.	Trouble diagnosis name	DTC detecting condition	Possible cause
P1212 1212	TCS communication line	ECM can not receive the information from “ABS actuator and electric unit (control unit)” continuously.	• Harness or connectors (The CAN communication line is open or shorted.) • ABS actuator and electric unit (control unit) • Dead (Weak) battery

DTC Confirmation Procedure

INFOID:0000000005485513

TESTING CONDITION:
Before performing the following procedure, confirm that battery voltage is more than 10.5 V at idle.

1. Start engine and let it idle for at least 10 seconds.
2. Check 1st trip DTC.
3. If 1st trip DTC is detected, go to EC-435, "Diagnosis Procedure".

Diagnosis Procedure

INFOID:0000000005485514

Go to BRC-45.

DTC P1217 ENGINE OVER TEMPERATURE

System Description

INFOID:0000000005284948

SYSTEM DESCRIPTION

NOTE:

- **If DTC P1217 is displayed with DTC UXXXX, first perform the trouble diagnosis for DTC UXXXX.**
- **If DTC P1217 is displayed with DTC P0607, first perform the trouble diagnosis for DTC P0607. Refer to EC-423.**

Cooling Fan Control

Sensor	Input Signal to ECM	ECM function	Actuator
Crankshaft position sensor (POS) Camshaft position sensor (PHASE)	Engine speed*1	Cooling fan control	• IPDM E/R (Cooling fan relays-1, -2 and -3) • Cooling fan relays-4 and -5
Battery	Battery voltage*1		
ABS actuator and electric unit (control unit)	Vehicle speed*2		
Combination meter			
Engine coolant temperature sensor	Engine coolant temperature		
Air conditioner switch	Air conditioner ON signal*2		
Refrigerant pressure sensor	Refrigerant pressure		

*1: The ECM determines the start signal status by the signals of engine speed and battery voltage.

*2: This signal is sent to ECM through CAN communication line.

The ECM controls the cooling fan corresponding to the vehicle speed, engine coolant temperature, refrigerant pressure, and air conditioner ON signal. The control system has 4-step control [HIGH/MIDDLE/LOW/OFF].

Cooling Fan Operation

Models with A/C

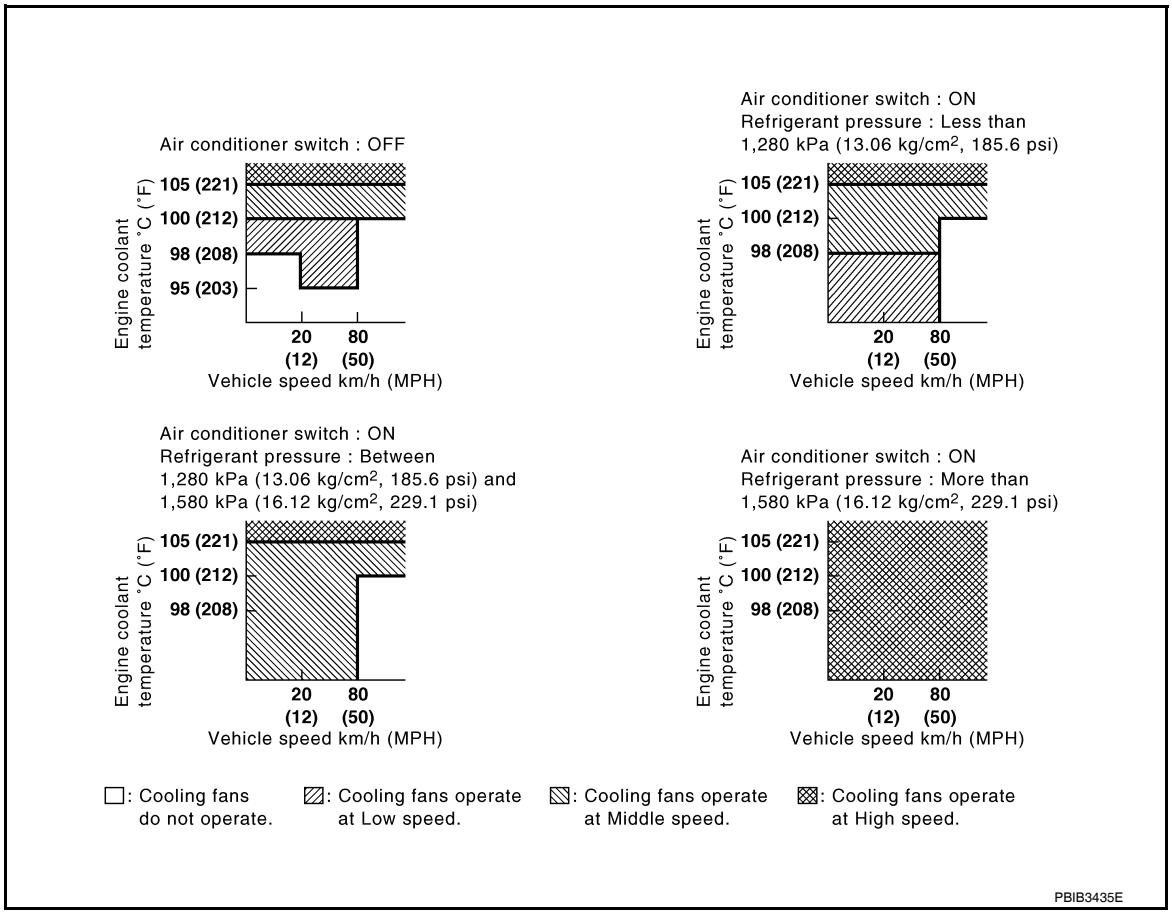

Models without A/C

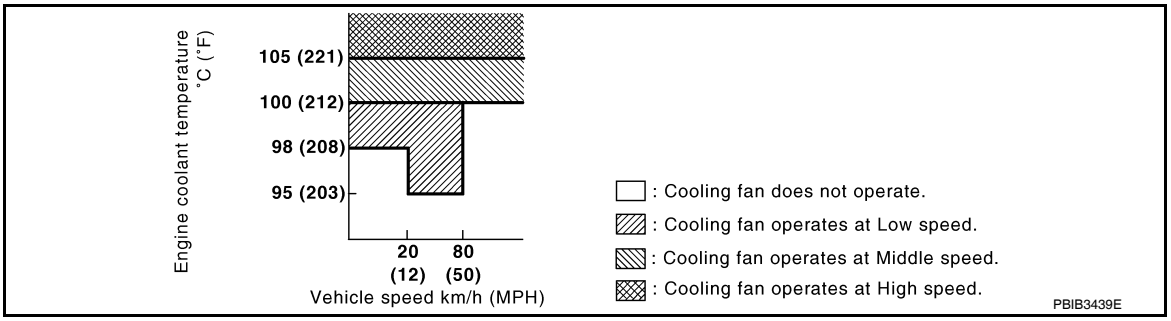

Cooling Fan Relay Operation

The ECM controls cooling fan relays through CAN communication line.

Cooling fan speed	Cooling fan relay				
	1	2	3	4	5
Stop (OFF)	OFF	OFF	OFF	OFF	OFF
Low (LOW)	OFF	OFF	OFF	ON	OFF
Middle (MID)	ON	OFF	OFF	OFF	ON
High (HI)	ON	ON	ON	OFF	ON

COMPONENT DESCRIPTION

Cooling Fan Motor

The cooling fan operates at each speed when the current flows in the cooling fan motor as follows.

Cooling fan speed	Cooling fan motor terminals	
	(+)	(–)
Middle (MID)	1	3 and 4
	2	3 and 4
	1 and 2	3
	1 and 2	4
High (HI)	1 and 2	3 and 4

The cooling fan operates at low (LOW) speed when cooling fan motors-1 and -2 are circuited in series under middle speed condition.

CONSULT-III Reference Value in Data Monitor Mode

INFOID:0000000005284949

Specification data are reference values.

Monitor item	Condition		Specification
AIR COND SIG	• Engine: After warming up, idle the engine	Air conditioner switch: OFF	OFF
		Air conditioner switch: ON (Compressor operates.)	ON
COOLING FAN	• Engine: After warming up, idle the engine • Air conditioner switch: OFF	Engine coolant temperature: 97°C (207°F) or less	OFF
		Engine coolant temperature: Between 98°C (208°F) and 99°C (210°F).	LOW
		Engine coolant temperature: Between 100°C (212°F) and 104°C (219°F).	MIDDLE
		Engine coolant temperature: 105°C (221°F) or more	HIGH

On Board Diagnosis Logic

INFOID:0000000005284950

If the cooling fan or another component in the cooling system malfunctions, engine coolant temperature will rise. When the engine coolant temperature reaches an abnormally high temperature condition, a malfunction is indicated.
This self-diagnosis has the one trip detection logic.

DTC No.	Trouble diagnosis name	DTC detecting condition	Possible cause
P1217 1217	Engine over temperature (Overheat)	• Cooling fan does not operate properly (Overheat). • Cooling fan system does not operate properly (Overheat). • Engine coolant was not added to the system using the proper filling method. • Engine coolant is not within the specified range.	• Harness or connectors (Cooling fan circuit is open or shorted.) • Cooling fan motor • IPDM E/R (Cooling fan relays-1, -2 and -3) • Cooling fan relays-4 and -5 • Radiator hose • Radiator • Reservoir tank • Radiator cap • Water pump • Thermostat • Water control valve For more information, refer to EC-446, "Main 13 Causes of Overheating".

CAUTION:
When a malfunction is indicated, be sure to replace the coolant. Refer to MA-20, "ENGINE COOLANT : Changing Engine Coolant". Also, replace the engine oil. Refer to MA-24, "ENGINE OIL : Changing Engine Oil".

1. **Fill radiator with coolant up to specified level with a filling speed of 2 liters per minute. Be sure to use coolant with the proper mixture ratio. Refer to MA-17, "Anti-freeze Coolant Mixture Ratio".**
2. **After refilling coolant, run engine to ensure that no water-flow noise is emitted.**

Overall Function Check

INFOID:0000000005284951

Use this procedure to check the overall function of the cooling fan. During this check, a DTC might not be confirmed.

WARNING:
Never remove the radiator cap when the engine is hot. Serious burns could be caused by high pressure fluid escaping from the reservoir tank or the radiator.
Wrap a thick cloth around cap. Carefully remove the cap by turning it a quarter turn to allow built-up pressure to escape. Then turn the cap all the way off.

WITH CONSULT-III

1. Check the coolant level in the reservoir tank and radiator.
   Allow engine to cool before checking coolant level.
   If the coolant level in the reservoir tank and/or radiator is below the proper range, skip the following steps and go to EC-442, "Diagnosis Procedure".
2. Confirm whether customer filled the coolant or not. If customer filled the coolant, skip the following steps and go to EC-442, "Diagnosis Procedure"
3. Turn ignition switch ON.

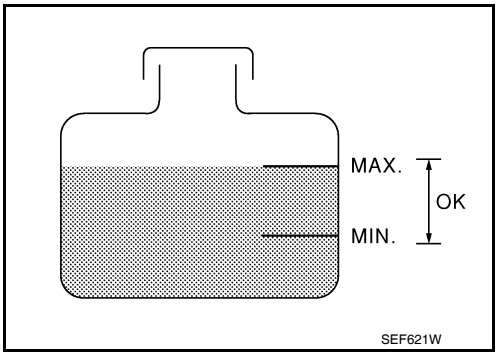

4. Perform “COOLING FAN” in “ACTIVE TEST” mode with CONSULT-III.
5. If the results are NG, go to EC-442, "Diagnosis Procedure".

WITH GST

1. Check the coolant level in the reservoir tank and radiator.
   Allow engine to cool before checking coolant level.
   If the coolant level in the reservoir tank and/or radiator is below the proper range, skip the following steps and go to EC-442, "Diagnosis Procedure".
2. Confirm whether customer filled the coolant or not. If customer filled the coolant, skip the following steps and go to EC-442, "Diagnosis Procedure".
3. Perform IPDM E/R auto active test and check cooling fan motor operation. Refer to PG-20, "Auto Active Test".
4. If NG, go to EC-442, "Diagnosis Procedure".

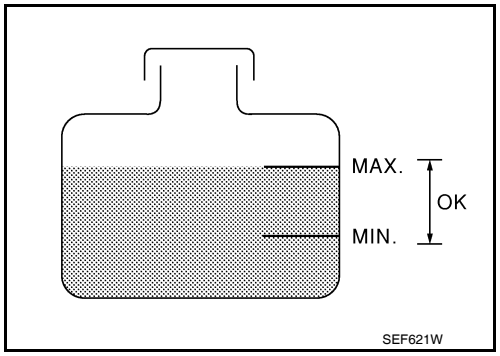

Wiring Diagram

INFOID:0000000005284952

EC-COOL/F-01

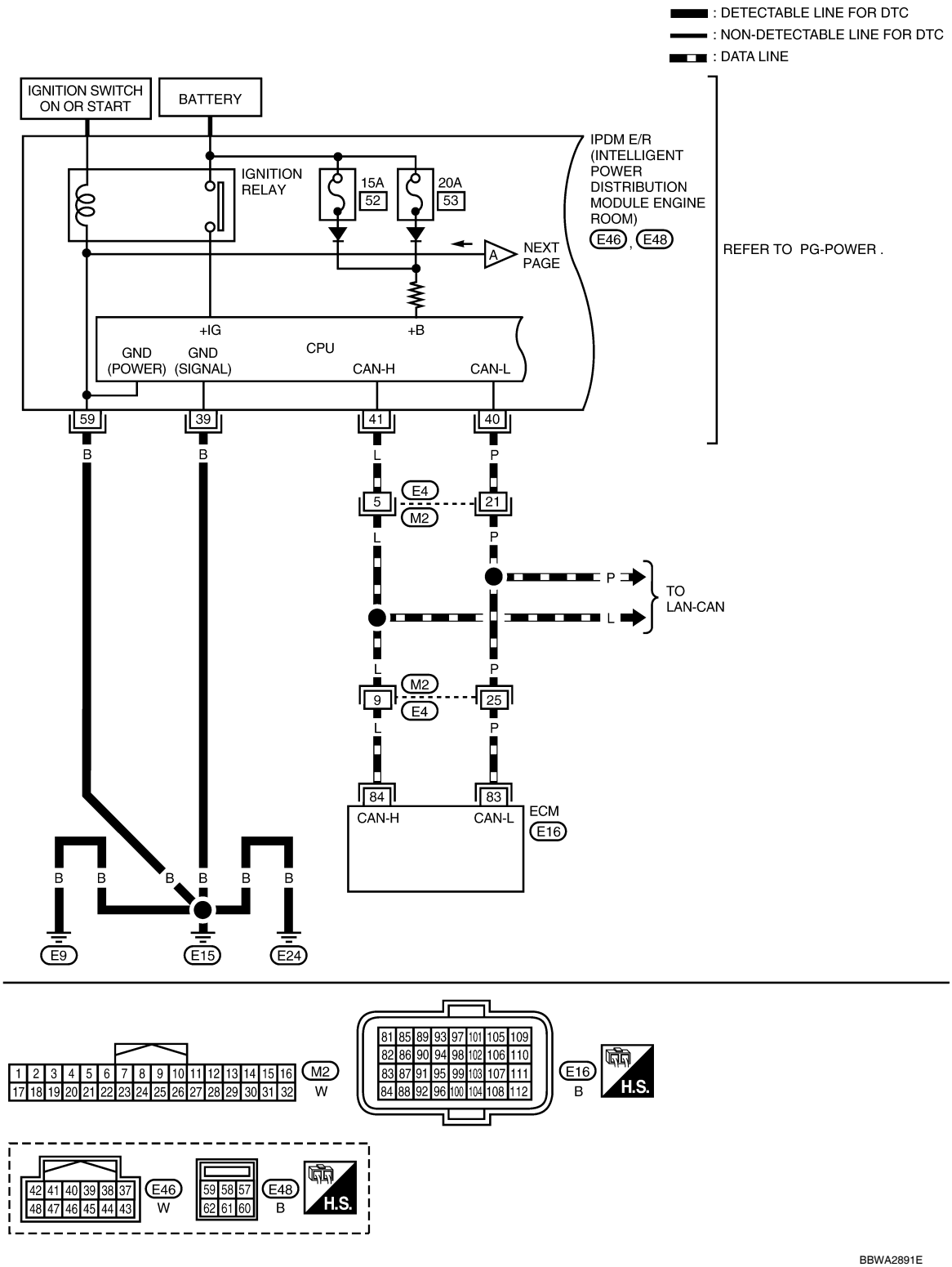

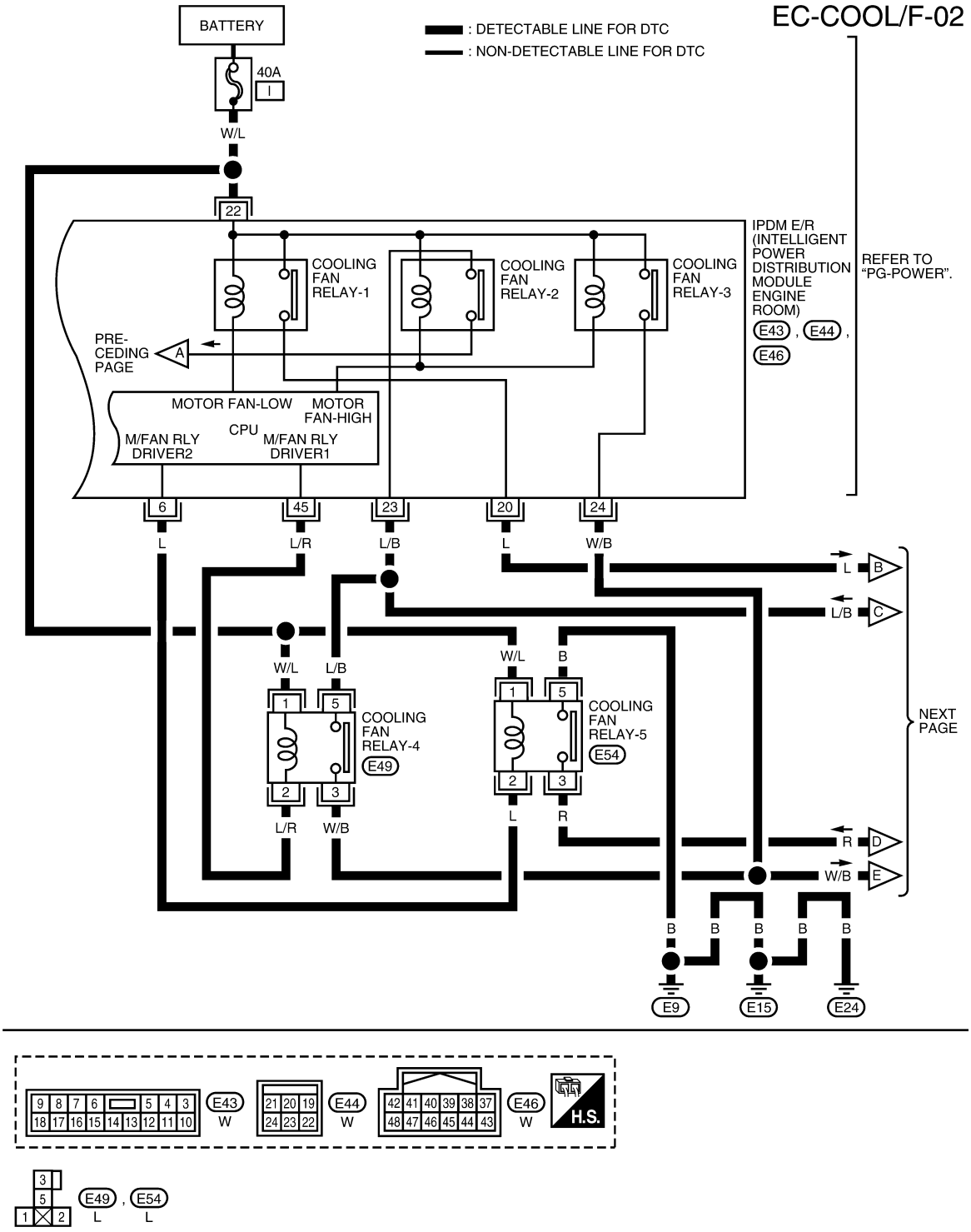
EC-COOL/F-02
: DETECTABLE LINE FOR DTC
: NON-DETECTABLE LINE FOR DTC
BATTERY
40A
I
W/L
22
IPDM E/R (INTELLIGENT POWER DISTRIBUTION MODULE ENGINE ROOM)
E43 , E44 , E46
REFER TO "PG-POWER".
COOLING FAN RELAY-1
COOLING FAN RELAY-2
COOLING FAN RELAY-3
PRE-CEDING PAGE
A
MOTOR FAN-LOW
MOTOR FAN-HIGH
CPU
M/FAN RLY DRIVER2
M/FAN RLY DRIVER1
6
45
23
20
24
L
L/R
L/B
L
W/B
B
C
W/L
L/B
W/L
B
COOLING FAN RELAY-4
E49
COOLING FAN RELAY-5
E54
NEXT PAGE
L/R
W/B
L
R
D
E
B
B
B
B
B
E9
E15
E24

E43
W
E44
W
E46
W
H.S.

E49 , E54
L
L

BBWA2892E

EC-COOL/F-03

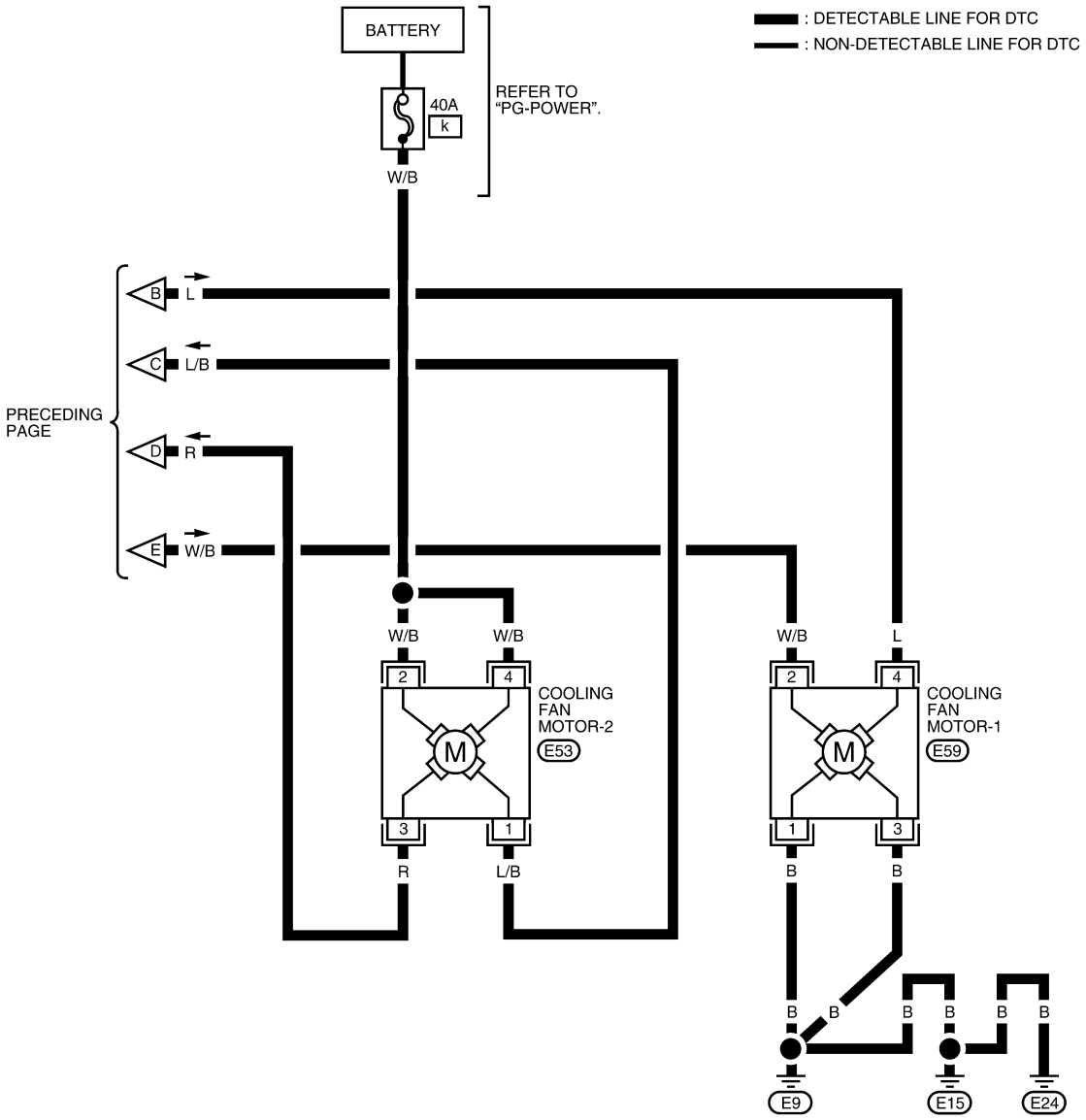

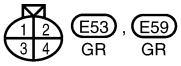

BBWA2893E

Diagnosis Procedure

INFOID:0000000005284953

1. INSPECTION START

Do you have CONSULT-III?

Yes or No

Yes >> GO TO 2.
No >> GO TO 3.

2. CHECK COOLING FAN OPERATION

With CONSULT-III

1. Turn ignition switch ON.
2. Select “COOLING FAN” in “ACTIVE TEST” mode with CONSULT-III.
3. Make sure that cooling fans-1 and -2 operates at each speed (LOW/MID/HI).

OK or NG

OK >> GO TO 4.
NG >> Check cooling fan control circuit. (Refer to "PROCEDURE A".)

3. CHECK COOLING FAN OPERATION

Without CONSULT-III

1. Perform IPDM E/R auto active test and check cooling fan motor operation.
   Refer to PG-20, "Auto Active Test".
2. Make sure that cooling fans-1 and -2 operates at each speed (Low/Middle/High).

OK or NG

OK >> GO TO 4.
NG >> Check cooling fan control circuit. (Refer to "PROCEDURE A".)

4. CHECK COOLING SYSTEM FOR LEAK

Refer to CO-11.

OK or NG

OK >> GO TO 5.
NG >> Check the following for leak.
- Hose
- Radiator
- Water pump

5. CHECK RADIATOR CAP

Refer to CO-15.

OK or NG

OK >> GO TO 6.
NG >> Replace radiator cap.

6. CHECK COMPONENT PARTS

Check the following.
- Thermostat. (Refer to CO-19.)
- Water control valve. (Refer to CO-24.)
- Engine coolant temperature sensor. (Refer to EC-211.)

OK or NG

OK >> GO TO 7.
NG >> Replace malfunctioning component parts.

7. CHECK MAIN 13 CAUSES

If the cause cannot be isolated, go to EC-446, "Main 13 Causes of Overheating".

>> **INSPECTION END**

PROCEDURE A

1. CHECK IPDM E/R POWER SUPPLY CIRCUIT

1. Turn ignition switch OFF.
2. Disconnect IPDM E/R harness connector E44.

3. Check voltage between IPDM E/R terminal 22 and ground with CONSULT-III or tester.

Voltage: Battery voltage

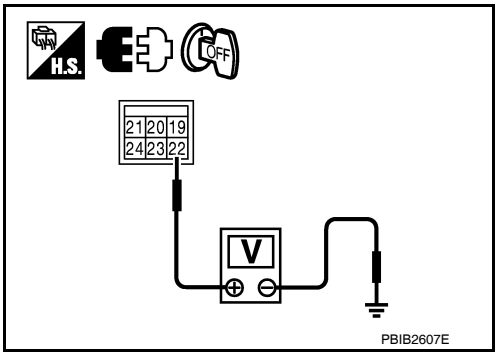

OK or NG

OK >> GO TO 3.
NG >> GO TO 2.

2. DETECT MALFUNCTIONING PART

Check the following.
- 40 A fusible link
- Harness for open or short between IPDM E/R and battery

>> Repair open circuit or short to ground or short to power in harness or connectors.

3. CHECK COOLING FAN RELAYS POWER SUPPLY CIRCUIT

1. Disconnect cooling fan relays-4 (2) and -5 (1).
- ⇦: Vehicle front

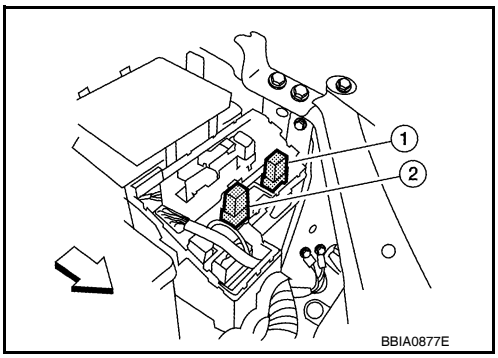

2. Check voltage between cooling fan relays-4, -5 terminal 1 and ground with CONSULT-III or tester.

Voltage: Battery voltage

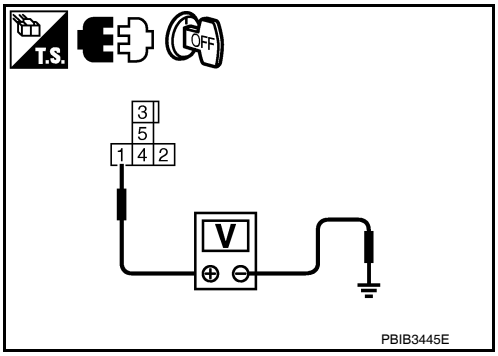

OK or NG

OK >> GO TO 4.
NG >> Repair open circuit or short to power or short to ground in harness or connectors.

4. CHECK COOLING FAN MOTORS POWER SUPPLY CIRCUIT

1. Disconnect cooling fan motor-2 harness connector (2).
- ⇦: Vehicle front
- Cooling fan motor-1 harness connector (1)
- Radiator (3)

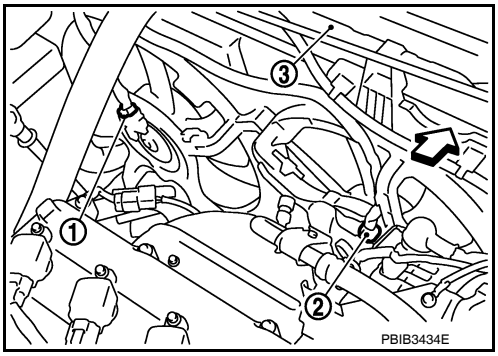

2. Check voltage between cooling fan motor-2 terminal 2, 4 and ground with CONSULT-III or tester.

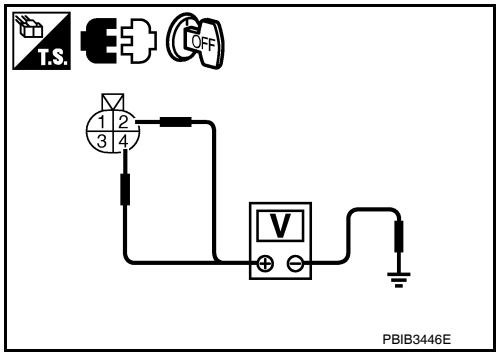

Voltage: Battery voltage

OK or NG

OK >> GO TO 6.
NG >> GO TO 5.

5. DETECT MALFUNCTIONING PART

Check the following.
- 40 A fusible link
- Harness for open or short between cooling fan motor-2 and battery

>> Repair open circuit or short to ground or short to power in harness or connectors.

6. CHECK COOLING FAN MOTORS CIRCUIT FOR OPEN AND SHORT

1. Turn ignition switch OFF.
2. Disconnect IPDM E/R harness connectors E46 and E48.
3. Disconnect cooling fan motor-1 harness connector (1).
- ⇦: Vehicle front
- Cooling fan motor-2 harness connector (2)
- Radiator (3)
4. Check harness continuity between the following;
   cooling fan relay-4 terminal 2 and IPDM E/R terminal 45,
   cooling fan relay-4 terminal 5 and IPDM E/R terminal 23,
   cooling fan relay-5 terminal 2 and IPDM E/R terminal 6,
   cooling fan relay-5 terminal 5 and ground,
   cooling fan relay-4 terminal 3 and cooling fan motor-1 terminal 2,
   cooling fan motor-1 terminal 2 and IPDM E/R terminal 24,
   cooling fan motor-1 terminal 4 and IPDM E/R terminal 20,
   cooling fan motor-1 terminal 1, 3 and ground.
   IPDM E/R terminal 39, 59 and ground.

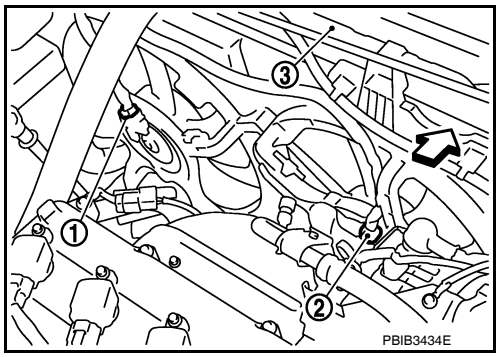

Continuity should exist.

cooling fan relay-4 terminal 5 and cooling fan motor-2 terminal 1,
cooling fan relay-5 terminal 3 and cooling fan motor-2 terminal 3,
cooling fan motor-2 terminal 1 and cooling fan relay-4 terminal 5,
Refer to Wiring Diagram.

Continuity should exist.

5. Also check harness for short to ground and short to power.

OK or NG

OK >> GO TO 8.
NG >> GO TO 7.

7. DETECT MALFUNCTIONING PART

Check the following.
- Harness for open or short between cooling fan relay-4 and IPDM E/R
- Harness for open or short between cooling fan relay-5 and IPDM E/R
- Harness for open or short between cooling fan relay-4 and cooling fan motor-1
- Harness for open or short between cooling fan relay-4 and cooling fan motor-2
- Harness for open or short between cooling fan relay-5 and cooling fan motor-2
- Harness for open or short between cooling fan relay-5 and ground
- Harness for open or short between cooling fan motor-1 and ground

- Harness for open or short between IPDM E/R and ground

>> Repair open circuit or short to ground or short to power in harness or connectors.

8. CHECK GROUND CONNECTIONS

Loosen and retighten ground screw on the body.
Refer to EC-157, "Ground Inspection".

- ⇦: Vehicle front
- Body ground (1)

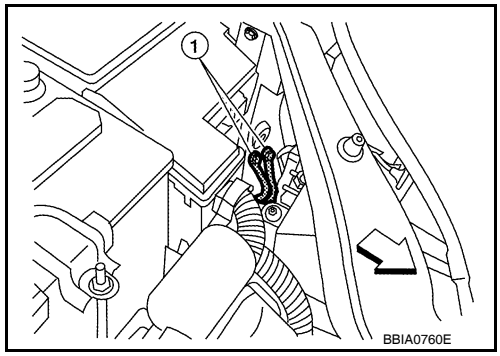

OK or NG

OK >> GO TO 9.
NG >> Repair or replace ground connections.

9. CHECK COOLING FAN RELAYS-4 AND -5

Refer to EC-447, "Component Inspection".

OK or NG

OK >> GO TO 10.
NG >> Replace malfunctioning cooling fan relay.

10. CHECK COOLING FAN MOTORS-1 AND -2

Refer to EC-447, "Component Inspection".

OK or NG

OK >> GO TO 11.
NG >> Replace malfunctioning cooling fan motor.

11. CHECK INTERMITTENT INCIDENT

Perform EC-152.

OK or NG

OK >> Replace IPDM E/R. Refer to PG-27, "Removal and Installation of IPDM E/R".
NG >> Repair or replace harness or connector.

Main 13 Causes of Overheating

INFOID:0000000005284954

Engine	Step	Inspection item	Equipment	Standard	Reference page
OFF	1	• Blocked radiator • Blocked condenser • Blocked radiator grille • Blocked bumper	• Visual	No blocking	—
	2	• Coolant mixture	• Coolant tester	See MA-17, "Anti-freeze Coolant Mixture Ratio".	
	3	• Coolant level	• Visual	Coolant up to MAX level in reservoir tank and radiator filler neck	See CO-11, "Inspection".
	4	• Radiator cap	• Pressure tester	See MA-18, "ENGINE COOLANT : Inspection".	
ON*2	5	• Coolant leaks	• Visual	No leaks	See CO-11, "Inspection".
ON*2	6	• Thermostat	• Touch the upper and lower radiator hoses	Both hoses should be hot	See CO-21, and CO-15
ON*1	7	• Cooling fan	• CONSULT-III	Operating	See trouble diagnosis for DTC P1217 (EC-442, "Diagnosis Procedure").
OFF	8	• Combustion gas leak	• Color checker chemical tester 4 Gas analyzer	Negative	—

Engine	Step	Inspection item	Equipment	Standard	Reference page
ON*3	9	• Coolant temperature gauge	• Visual	Gauge less than 3/4 when driving	—
		• Coolant overflow to reservoir tank	• Visual	No overflow during driving and idling	See MA-20, "ENGINE COOLANT : Changing Engine Coolant".
OFF*4	10	• Coolant return from reservoir tank to radiator	• Visual	Should be initial level in reservoir tank	See CO-11, "Inspection".
OFF	11	• Water control valve	• Remove and inspect the valve	Within the specified value	See CO-24
OFF	12	• Cylinder head	• Straight gauge feeler gauge	0.1 mm (0.004 in) Maximum distortion (warping)	See EM-65.
	13	• Cylinder block and pistons	• Visual	No scuffing on cylinder walls or piston	See EM-80.

*1: Turn the ignition switch ON.

*2: Engine running at 3,000 rpm for 10 minutes.

*3: Drive at 90 km/h (56 MPH) for 30 minutes and then let idle for 10 minutes.

*4: After 60 minutes of cool down time.

For more information, refer to CO-7.

Component Inspection

INFOID:0000000005284955

COOLING FAN MOTORS-1 AND -2

1. Disconnect cooling fan motor harness connectors.
2. Supply cooling fan motor terminals with battery voltage and check operation.

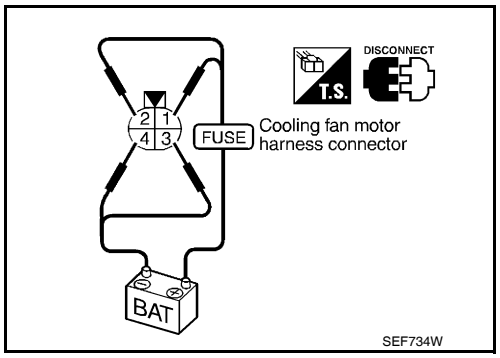

Cooling fan speed	Cooling fan motor terminals	
	(+)	(–)
Middle (MID)	1	3 and 4
	2	3 and 4
	1 and 2	3
	1 and 2	4
High (HI)	1 and 2	3 and 4

Cooling fan motor should operate.
If NG, replace cooling fan motor.

COOLING FAN RELAYS-4 AND -5

Check continuity between terminals 3 and 4.

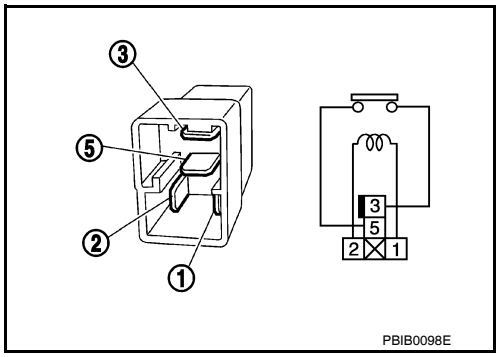

Conditions	Continuity
12 V direct current supply between terminal 1 and 2	Yes
No current supply	No

If NG, replace cooling fan motor.

DTC P1225 TP SENSOR

Component Description

INFOID:0000000005284956

Electric throttle control actuator consists of throttle control motor, throttle position sensor, etc. The throttle position sensor responds to the throttle valve movement.
The throttle position sensor has two sensors. These sensors are a kind of potentiometers which transform the throttle valve position into output voltage, and emit the voltage signal to the ECM. In addition, these sensors detect the opening and closing speed of the throttle valve and feed the voltage signals to the ECM. The ECM judges the current opening angle of the throttle valve from these signals and the ECM controls the throttle control motor to make the throttle valve opening angle properly in response to driving condition.

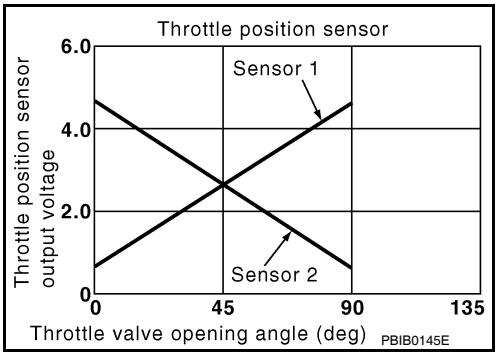

On Board Diagnosis Logic

INFOID:0000000005284957

The MIL will not light up for this self-diagnosis.

DTC No.	Trouble diagnosis name	DTC detecting condition	Possible cause
P1225 1225	Closed throttle position learning performance	Closed throttle position learning value is excessively low.	• Electric throttle control actuator (TP sensor 1 and 2)

DTC Confirmation Procedure

INFOID:0000000005284958

NOTE:
If DTC Confirmation Procedure has been previously conducted, always turn ignition switch OFF and wait at least 10 seconds before conducting the next test.
TESTING CONDITION:
Before performing the following procedure, confirm that battery voltage is more than 10 V at idle.

1. Turn ignition switch OFF and wait at least 10 seconds.
2. Turn ignition switch ON.
3. Check 1st trip DTC.
4. If 1st trip DTC is detected, go to EC-448, "Diagnosis Procedure".

Diagnosis Procedure

INFOID:0000000005284959

1. CHECK ELECTRIC THROTTLE CONTROL ACTUATOR VISUALLY

1. Turn ignition switch OFF.
2. Remove the intake air duct.
3. Check if foreign matter is caught between the throttle valve (1) and the housing.

- ⇦: Vehicle front
- Illustration shows the view with intake air duct removed.

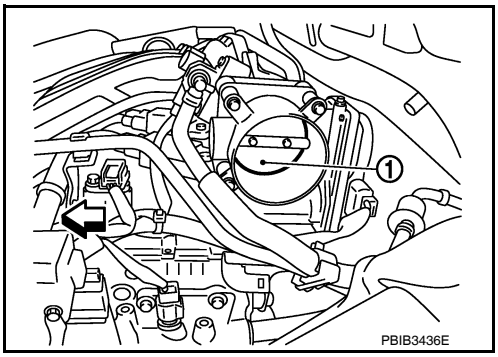

OK or NG

OK >> GO TO 2.
NG >> Remove the foreign matter and clean the electric throttle control actuator inside.

2. REPLACE ELECTRIC THROTTLE CONTROL ACTUATOR

1. Replace the electric throttle control actuator.
2. Perform EC-99, "Throttle Valve Closed Position Learning".
3. Perform EC-99, "Idle Air Volume Learning".

>> **INSPECTION END**

Removal and Installation

INFOID:0000000005284960

ELECTRIC THROTTLE CONTROL ACTUATOR

Refer to EM-18.

DTC P1226 TP SENSOR

Component Description

INFOID:0000000005284961

Electric throttle control actuator consists of throttle control motor, throttle position sensor, etc. The throttle position sensor responds to the throttle valve movement.
The throttle position sensor has two sensors. These sensors are a kind of potentiometers which transform the throttle valve position into output voltage, and emit the voltage signal to the ECM. In addition, these sensors detect the opening and closing speed of the throttle valve and feed the voltage signals to the ECM. The ECM judges the current opening angle of the throttle valve from these signals and the ECM controls the throttle control motor to make the throttle valve opening angle properly in response to driving condition.

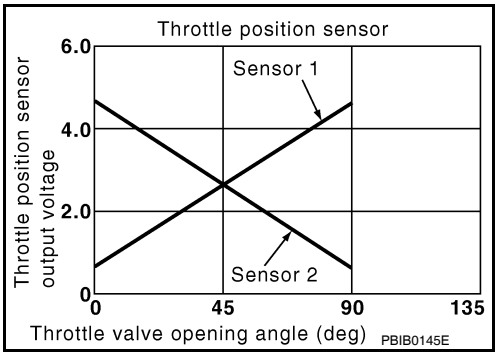

On Board Diagnosis Logic

INFOID:0000000005284962

The MIL will not light up for this self-diagnosis.

DTC No.	Trouble diagnosis name	DTC detecting condition	Possible cause
P1226 1226	Closed throttle position learning performance	Closed throttle position learning is not performed successfully, repeatedly.	• Electric throttle control actuator (TP sensor 1 and 2)

DTC Confirmation Procedure

INFOID:0000000005284963

NOTE:
If DTC Confirmation Procedure has been previously conducted, always turn ignition switch OFF and wait at least 10 seconds before conducting the next test.
TESTING CONDITION:
Before performing the following procedure, confirm that battery voltage is more than 10 V at idle.

1. Turn ignition switch OFF and wait at least 10 seconds.
2. Turn ignition switch ON.
3. Repeat steps 1 and 2 for 32 times.
4. Check 1st trip DTC.
5. If 1st trip DTC is detected, go to EC-450, "Diagnosis Procedure".

Diagnosis Procedure

INFOID:0000000005284964

1. CHECK ELECTRIC THROTTLE CONTROL ACTUATOR VISUALLY

1. Turn ignition switch OFF.
2. Remove the intake air duct.
3. Check if foreign matter is caught between the throttle valve (1) and the housing.

- ⇦: Vehicle front
- Illustration shows the view with intake air duct removed.

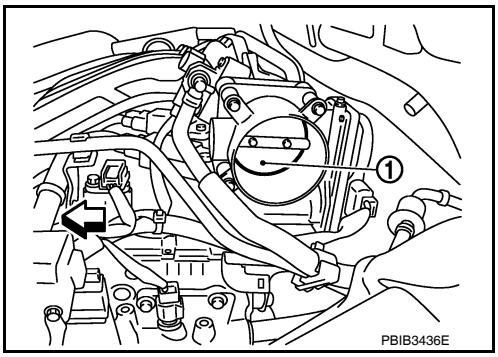

OK or NG

OK >> GO TO 2.
NG >> Remove the foreign matter and clean the electric throttle control actuator inside.

2. REPLACE ELECTRIC THROTTLE CONTROL ACTUATOR

1. Replace the electric throttle control actuator.
2. Perform EC-99, "Throttle Valve Closed Position Learning".
3. Perform EC-99, "Idle Air Volume Learning".

>> **INSPECTION END**

Removal and Installation

INFOID:0000000005284965

ELECTRIC THROTTLE CONTROL ACTUATOR

Refer to EM-18.

DTC P1421 COLD START CONTROL

Description

INFOID:0000000005284966

ECM controls ignition timing and engine idle speed when engine is started with prewarming up condition. This control promotes the activation of three way catalyst by heating the catalyst and reduces emissions.

On Board Diagnosis Logic

INFOID:0000000005284967

DTC No.	Trouble diagnosis name	DTC detecting condition	Possible cause
P1421 1421	Cold start emission reduction strategy monitoring	ECM does not control ignition timing and engine idle speed properly when engine is started with prewarming up condition.	• Lack of intake air volume • Fuel injection system • ECM

DTC Confirmation Procedure

INFOID:0000000005284968

NOTE:
- If DTC Confirmation Procedure has been previously conducted, always turn ignition switch OFF and wait at least 10 seconds before conducting the next test.
- **If DTC P1421 is displayed with other DTC, first perform the trouble diagnosis for other DTC.**

TESTING CONDITION:
Before performing the following procedure, confirm that battery voltage is more than 11 V at idle.

WITH CONSULT-III

1. Turn ignition switch OFF and wait at least 10 seconds.
2. Turn ignition switch ON.
3. Select “DATA MONITOR” mode with CONSULT-III.
4. Check that the “COOLAN TEMP/S” indication is between 5°C (41°F) and 36°C (97°F).
   If “COOLAN TEMP/S” indication is within the specified value, go to the following step.
   If “COOLAN TEMP/S” indication is out of the specified value, cool engine down or warm engine up and go to step 1.
5. Start engine and let it idle for 5 minutes.
6. Check 1st trip DTC.
7. If 1st trip DTC is detected, go to EC-452, "Diagnosis Procedure".

WITH GST

Follow the procedure “WITH CONSULT-III” above.

Diagnosis Procedure

INFOID:0000000005284969

1. PERFORM IDLE AIR VOLUME LEARNING

Perform EC-99, "Idle Air Volume Learning".
Is Idle Air Volume Learning carried out successfully?

Yes or No

Yes >> GO TO 2.
No >> Follow the instruction of Idle Air Volume Learning.

2. CHECK INTAKE SYSTEM

Check for the cause of intake air volume lacking. Refer to the following.
- Crushed intake air passage
- Intake air passage clogging

OK or NG

OK >> GO TO 3.
NG >> Repair or replace malfunctioning part

3. CHECK FUEL INJECTION SYSTEM FUNCTION

Perform EC-275, "DTC Confirmation Procedure" for DTC P0171.

OK or NG

OK >> GO TO 4.
NG >> Go to EC-278, "Diagnosis Procedure" for DTC P0171.

4. PERFORM DTC CONFIRMATION PROCEDURE

1. Erase DTC.
2. **Perform DTC Confirmation Procedure.**
   See EC-452, "DTC Confirmation Procedure".
3. Is the 1st trip DTC P1421 displayed again?

Yes or No

Yes >> GO TO 5.
No >> **INSPECTION END**

5. REPLACE ECM

1. Replace ECM.
2. Perform initialization of NVIS (NATS) system and registration of all NVIS (NATS) ignition key IDs.
   Refer to BL-171, "ECM Re-communicating Function".
3. Perform EC-99, "VIN Registration".
4. Perform EC-99, "Accelerator Pedal Released Position Learning".
5. Perform EC-99, "Throttle Valve Closed Position Learning".
6. Perform EC-99, "Idle Air Volume Learning".

>> **INSPECTION END**

DTC P1564 ASCD STEERING SWITCH

Component Description

INFOID:0000000005284970

ASCD steering switch has variant values of electrical resistance for each button. ECM reads voltage variation of switch, and determines which button is operated.

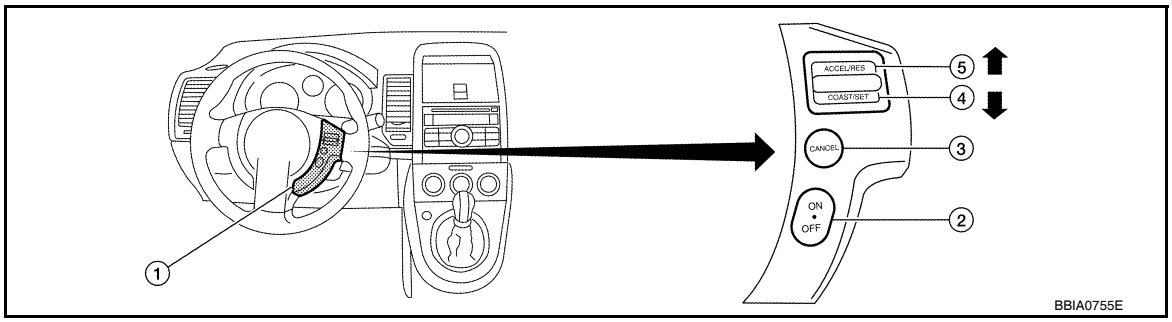

1. ASCD steering switch
2. MAIN switch
3. CANCEL switch
4. SET/COAST switch
5. RESUME/ACCELERATE switch

Refer to EC-42 for the ASCD function.

CONSULT-III Reference Value in Data Monitor Mode

INFOID:0000000005284971

Specification data are reference values.

Monitor item	Condition		Specification
MAIN SW	• Ignition switch: ON	MAIN switch: Pressed	ON
		MAIN switch: Released	OFF
CANCEL SW	• Ignition switch: ON	CANCEL switch: Pressed	ON
		CANCEL switch: Released	OFF
RESUME/ACC SW	• Ignition switch: ON	RESUME/ACCELERATE switch: Pressed	ON
		RESUME/ACCELERATE switch: Released	OFF
SET SW	• Ignition switch: ON	SET/COAST switch: Pressed	ON
		SET/COAST switch: Released	OFF

On Board Diagnosis Logic

INFOID:0000000005284972

- **This self-diagnosis has the one trip detection logic.**
- **The MIL will not light up for this self-diagnosis.**

NOTE:
If DTC P1564 is displayed with DTC P0605, first perform the trouble diagnosis for DTC P0605. Refer to EC-421.

DTC No.	Trouble Diagnosis Name	DTC Detecting Condition	Possible Cause
P1564 1564	ASCD steering switch	• An excessively high voltage signal from the ASCD steering switch is sent to ECM. • ECM detects that input signal from the ASCD steering switch is out of the specified range. • ECM detects that the ASCD steering switch is stuck ON.	• Harness or connectors (ASCD switch circuit is open or shorted.) • ASCD steering switch • ECM

DTC Confirmation Procedure

INFOID:0000000005284973

NOTE:
If DTC Confirmation Procedure has been previously conducted, always turn ignition switch OFF and wait at least 10 seconds before conducting the next test.

1. Turn ignition switch ON.
2. Wait at least 10 seconds.
3. Press MAIN switch for at least 10 seconds, then release it and wait at least 10 seconds.
4. Press CANCEL switch for at least 10 seconds, then release it and wait at least 10 seconds.
5. Press RESUME/ACCELERATE switch for at least 10 seconds, then release it and wait at least 10 seconds.
6. Press SET/COAST switch for at least 10 seconds, then release it and wait at least 10 seconds.
7. Check DTC.
8. If DTC is detected, go to EC-457, "Diagnosis Procedure".

Wiring Diagram

INFOID:0000000005284974

EC-ASC/SW-01

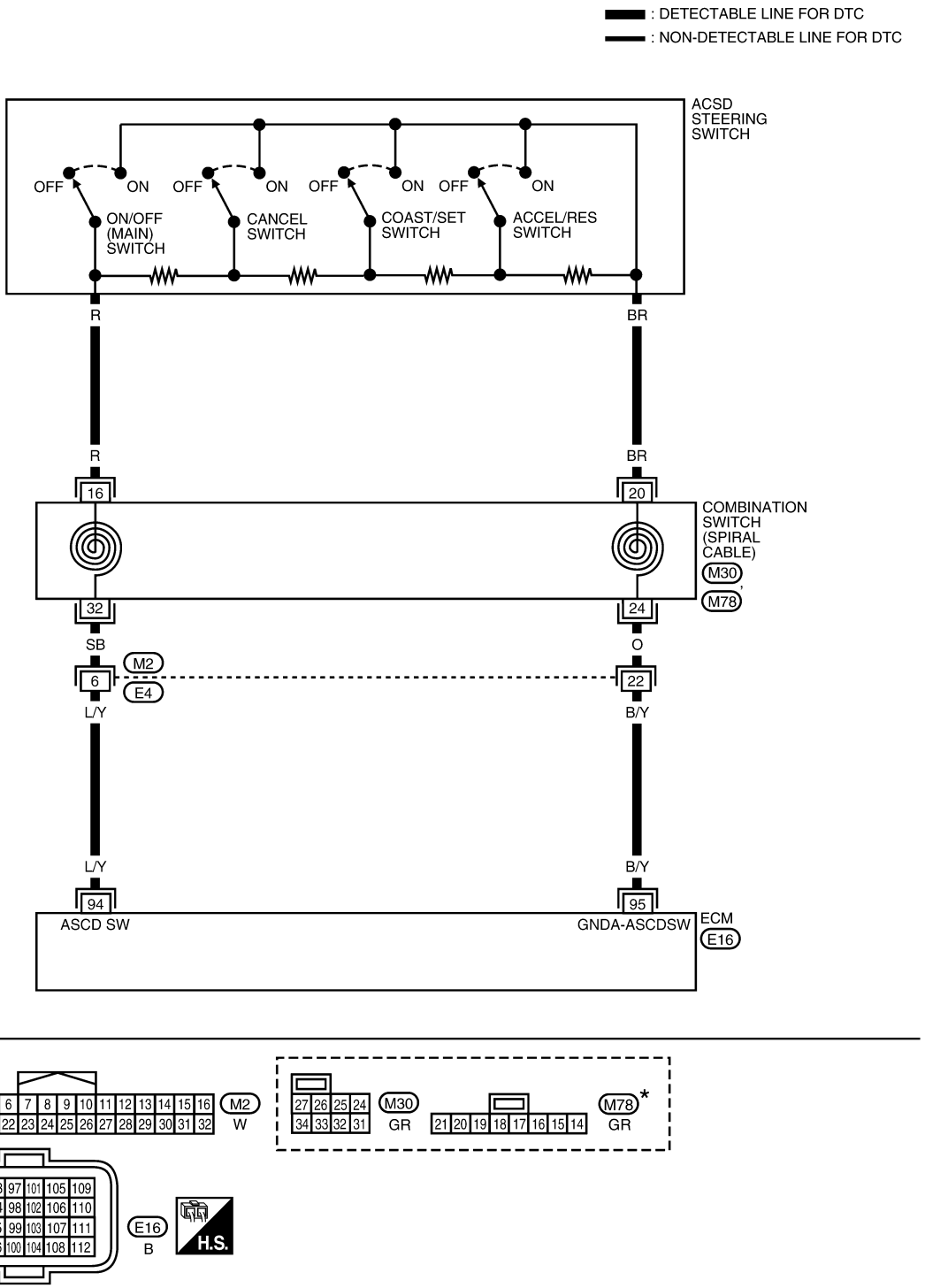

★: THIS CONNECTOR IS NOT SHOWN IN "HARNESS LAYOUT" OF PG SECTION.

BBWA2894E

Specification data are reference values and are measured between each terminal and ground.

CAUTION:

Do not use ECM ground terminals when measuring input/output voltage. Doing so may result in damage to the ECM's transistor. Use a ground other than ECM terminals, such as the ground.

TERMINAL NO.	WIRE COLOR	ITEM	CONDITION	DATA (DC Voltage)
94	L/Y	ASCD steering switch	**[Ignition switch: ON]** • ASCD steering switch: OFF	Approximately 4 V
			[Ignition switch: ON] • MAIN switch: Pressed	Approximately 0 V
			[Ignition switch: ON] • CANCEL switch: Pressed	Approximately 1 V
			[Ignition switch: ON] • RESUME/ACCELERATE switch: Pressed	Approximately 3 V
			[Ignition switch: ON] • SET/COAST switch: Pressed	Approximately 2 V
95	B/Y	Sensor ground	**[Engine is running]** • **Warm-up condition** • Idle speed	Approximately 0 V

Diagnosis Procedure

INFOID:0000000005284975

1. CHECK GROUND CONNECTIONS

1. Turn ignition switch OFF.
2. Loosen and retighten ground screws on the body.
   Refer to EC-157, "Ground Inspection".

- ⇦: Vehicle front
- Body ground (1)

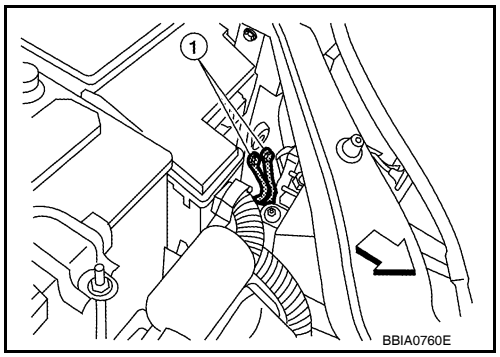

OK or NG

OK >> GO TO 2.
NG >> Repair or replace ground connections.

2. CHECK ASCD STEERING SWITCH CIRCUIT

With CONSULT-III

1. Turn ignition switch ON.
2. Select “MAIN SW”, “RESUME/ACC SW”, “SET SW and “CANCEL SW” in “DATA MONITOR” mode with CONSULT-III.
3. Check each item indication under the following conditions.

Switch	Monitor item	Condition	Indication
MAIN switch	MAIN SW	Pressed	ON
		Released	OFF
CANCEL switch	CANCEL SW	Pressed	ON
		Released	OFF
RESUME/ACCELERATE switch	RESUME/ACC SW	Pressed	ON
		Released	OFF
SET/COAST switch	SET SW	Pressed	ON
		Released	OFF

Without CONSULT-III

1. Turn ignition switch ON.

2. Check voltage between ECM terminal 94 and ground with pressing each button.

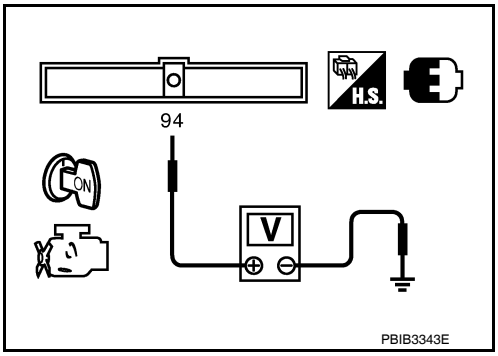

Switch	Condition	Voltage (V)
MAIN switch	Pressed	Approx. 0
	Released	Approx. 4.0
CANCEL switch	Pressed	Approx. 1.0
	Released	Approx. 4.0
RESUME/ACCELERATE switch	Pressed	Approx. 3.0
	Released	Approx. 4.0
SET/COAST switch	Pressed	Approx. 2.0
	Released	Approx. 4.0

OK or NG

OK >> GO TO 8.
NG >> GO TO 3.

3. CHECK ASCD STEERING SWITCH GROUND CIRCUIT FOR OPEN AND SHORT

1. Turn ignition switch OFF.
2. Disconnect combination switch harness connector M78.
3. Disconnect ECM harness connector.
4. Check harness continuity between combination switch terminal 20 (unit side) and ECM terminal 95. Refer to Wiring Diagram.

Continuity should exist.

5. Also check harness for short to ground or short to power.

OK or NG

OK >> GO TO 5.
NG >> GO TO 4.

4. DETECT MALFUNCTIONING PART

Check the following.
- Harness connectors M2, E4
- Combination switch (spiral cable)
- Harness for open and short between ECM and combination switch

>> Repair open circuit or short to ground or short to power in harness or connectors.

5. CHECK ASCD STEERING SWITCH INPUT SIGNAL CIRCUIT FOR OPEN AND SHORT

1. Check harness continuity between ECM terminal 94 and combination switch terminal 16. Refer to Wiring Diagram.

Continuity should exist.

2. Also check harness for short to ground and short to power.

OK or NG

OK >> GO TO 7.
NG >> GO TO 6.

6. DETECT MALFUNCTIONING PART

Check the following.
- Harness connectors M2, E4
- Combination switch (spiral cable)
- Harness for open and short between ECM and combination switch

>> Repair open circuit or short to ground or short to power in harness or connectors.

7. CHECK ASCD STEERING SWITCH

Refer to EC-459, "Component Inspection".

OK or NG

OK >> GO TO 8.
NG >> Replace ASCD steering switch.

8. CHECK INTERMITTENT INCIDENT

Refer to EC-152.

>> **INSPECTION END**

Component Inspection

INFOID:0000000005284976

ASCD STEERING SWITCH

1. Disconnect combination switch (spiral cable) harness connector M78.
2. Check continuity between combination switch (spiral cable) terminals 16 and 20 with pushing each switch.

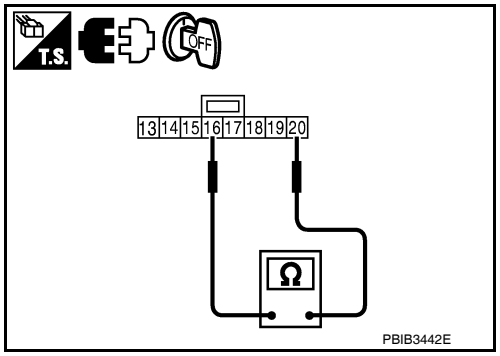

Switch	Condition	Resistance (Ω)
MAIN switch	Pressed	Approx. 0
	Released	Approx. 4,000
CANCEL switch	Pressed	Approx. 250
	Released	Approx. 4,000
RESUME/ACCELERATE switch	Pressed	Approx. 1,480
	Released	Approx. 4,000
SET/COAST switch	Pressed	Approx. 660
	Released	Approx. 4,000

If NG, replace ASCD steering switch.

DTC P1572 ASCD BRAKE SWITCH

Component Description

INFOID:0000000005284977

When the brake pedal is depressed, ASCD brake switch (1) is turned OFF and stop lamp switch (2) is turned ON. ECM detects the state of the brake pedal (3) by this input of two kinds (ON/OFF signal). Refer to EC-42 for the ASCD function.

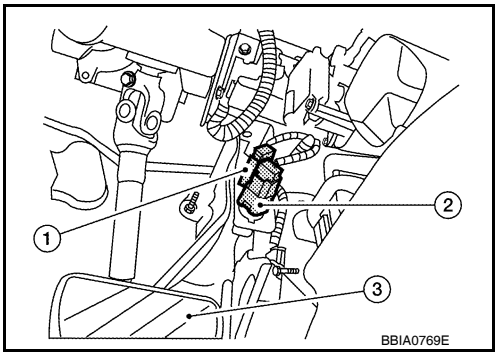

CONSULT-III Reference Value in Data Monitor Mode

INFOID:0000000005284978

Specification data are reference values.

Monitor item	Condition		Specification
BRAKE SW1 (ASCD brake switch)	• Ignition switch: ON	• Brake pedal: Fully released (CVT) • Brake pedal and clutch pedal: Fully released (M/T)	ON
		• Brake pedal: Slightly depressed (CVT) • Brake pedal and/or clutch pedal: Slightly depressed (M/T)	OFF
BRAKE SW2 (Stop lamp switch)	• Ignition switch: ON	Brake pedal: Fully released	OFF
		Brake pedal: Slightly depressed	ON

On Board Diagnosis Logic

INFOID:0000000005284979

- **This self-diagnosis has the one trip detection logic.**
- **The MIL will not light up for this self-diagnosis.**

NOTE:

- **If DTC P1572 is displayed with DTC P0605, first perform the trouble diagnosis for DTC P0605. Refer to EC-421.**
- **This self-diagnosis has the one trip detection logic. When malfunction A is detected, DTC is not stored in ECM memory. And in that case, 1st trip DTC and 1st trip freeze frame data are displayed. 1st trip DTC is erased when ignition switch OFF. And even when malfunction A is detected in two consecutive trips, DTC is not stored in ECM memory.**

DTC No.	Trouble Diagnosis Name	DTC Detecting Condition		Possible Cause
P1572 1572	ASCD brake switch	A)	When the vehicle speed is above 30km/h (19 MPH), ON signals from the stop lamp switch and the ASCD brake switch are sent to ECM at the same time.	• Harness or connectors (Stop lamp switch circuit is shorted.) • Harness or connectors (ASCD brake switch circuit is shorted.) • Harness or connectors (ASCD clutch switch circuit is shorted.) (M/T) • Stop lamp switch • ASCD brake switch • ASCD clutch switch (M/T) • Incorrect stop lamp switch installation • Incorrect ASCD brake switch installation • Incorrect ASCD clutch switch installation (M/T) • ECM
		B)	ASCD brake switch signal is not sent to ECM for extremely long time while the vehicle is driving	

DTC Confirmation Procedure

INFOID:0000000005284980

CAUTION:
Always drive vehicle at a safe speed.
NOTE:
- If DTC Confirmation Procedure has been previously conducted, always turn ignition switch OFF and wait at least 10 seconds before conducting the next test.
- Procedure for malfunction B is not described here. It takes extremely long time to complete procedure for malfunction B. By performing procedure for malfunction A, the incident that causes malfunction B can be detected.

TESTING CONDITION:
Steps 3 and 5 may be conducted with the drive wheels lifted in the shop or by driving the vehicle. If a road test is expected to be easier, it is unnecessary to lift the vehicle.

1. Start engine.
2. Press MAIN switch and make sure that CRUISE indicator lights up.
3. Drive the vehicle for at least 5 consecutive seconds under the following condition.

Vehicle speed	More than 30 km/h (19 MPH)
Shift lever	Suitable position

4. Check 1st trip DTC.
   If 1st trip DTC is detected, go to EC-463, "Diagnosis Procedure".
   If 1st trip DTC is not detected, go to the following step.
5. Drive the vehicle for at least 5 consecutive seconds under the following condition.

Vehicle speed	More than 30 km/h (19 MPH)
Shift lever	Suitable position
Driving location	Depress the brake pedal for more than 5 seconds so as not to come off from the above-mentioned vehicle speed.

6. Check 1st trip DTC.
7. If 1st trip DTC is detected, go to EC-463, "Diagnosis Procedure".

Wiring Diagram

INFOID:0000000005284981

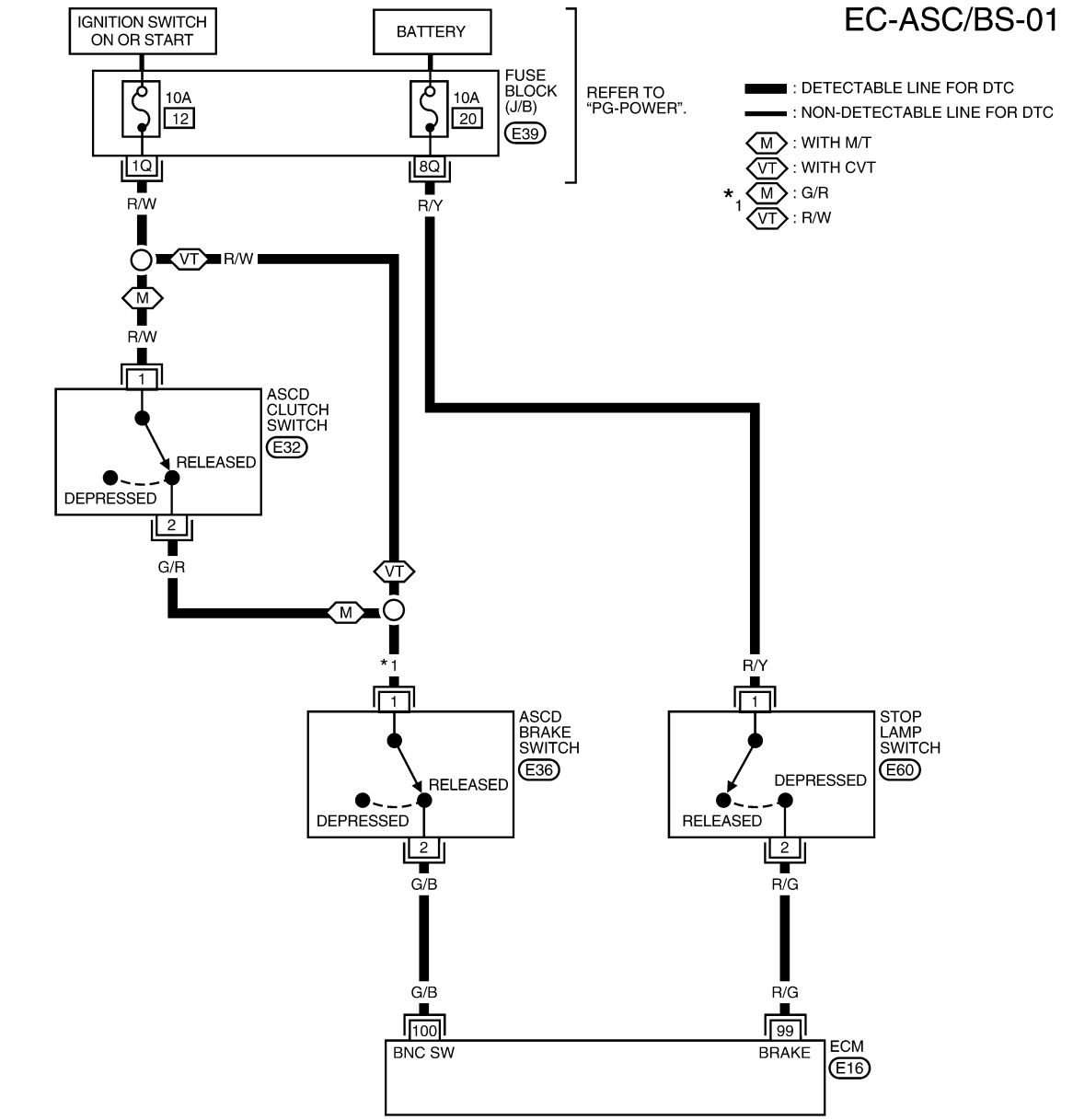

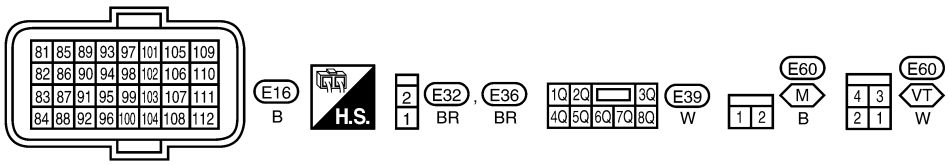

AABWA0299GB

Specification data are reference values and are measured between each terminal and ground.

CAUTION:

Do not use ECM ground terminals when measuring input/output voltage. Doing so may result in damage to the ECM's transistor. Use a ground other than ECM terminals, such as the ground.

TERMINAL NO.	WIRE COLOR	ITEM	CONDITION	DATA (DC Voltage)
99	R/G	Stop lamp switch	**[Ignition switch: ON]** • Brake pedal: Fully released	Approximately 0 V
			[Ignition switch: ON] • Brake pedal: Slightly depressed	BATTERY VOLTAGE (11 - 14 V)
100	G/B	ASCD brake switch	• Brake pedal: Slightly depressed (CVT) • Brake pedal and clutch pedal: Fully released (M/T)	BATTERY VOLTAGE (11 - 14 V)
			• Brake pedal: Slightly depressed (CVT) • Brake pedal and/or clutch pedal: Slightly depressed (M/T)	Approximately 0 V

Diagnosis Procedure

INFOID:0000000005284982

1. CHECK OVERALL FUNCTION-I

With CONSULT-III

1. Turn ignition switch ON.
2. Select “BRAKE SW1” in “DATA MONITOR” mode with CONSULT-III.
3. Check “BRAKE SW1” indication under the following conditions.

M/T models

Condition	Indication
Clutch pedal and/or brake pedal: Slightly depressed	OFF
Clutch pedal and brake pedal: Fully released	ON

CVT models

Condition	Indication
Brake pedal: Slightly depressed	OFF
Brake pedal: Fully released	ON

Without CONSULT-III

1. Turn ignition switch ON.
2. Check voltage between ECM terminal 100 and ground under the following conditions.

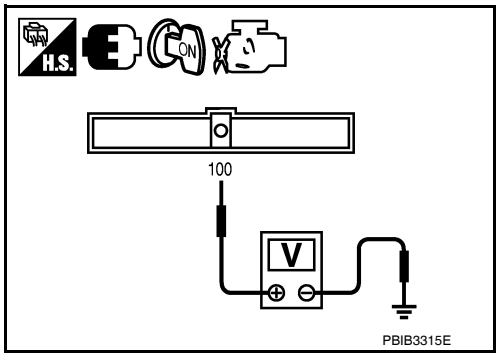

M/T models

Condition	Indication
Clutch pedal and/or brake pedal: Slightly depressed	Approximately 0 V
Clutch pedal and brake pedal: Fully released	Battery voltage

CVT models

Condition	Indication
Brake pedal: Slightly depressed	Approximately 0 V
Brake pedal: Fully released	Battery voltage

OK or NG

OK >> GO TO 2.
NG >> GO TO 3.

2. CHECK OVERALL FUNCTION-II

With CONSULT-III

Check “BRAKE SW2” indication in “DATA MONITOR” mode.

Condition	Indication
Brake pedal: Fully released	OFF
Brake pedal: Slightly depressed	ON

Without CONSULT-III

Check voltage between ECM terminal 99 and ground under the following conditions.

Condition	Indication
Brake pedal: Fully released	Approximately 0 V
Brake pedal: Slightly depressed	Battery voltage

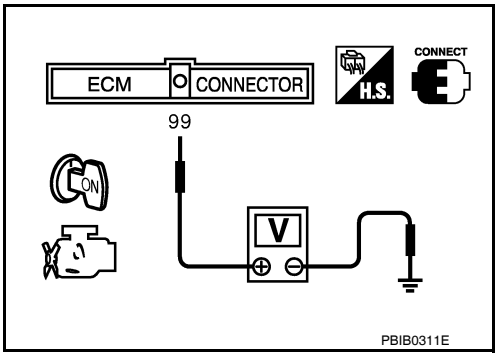

OK or NG

OK >> GO TO 15.
NG >> GO TO 11.

3. CHECK ASCD BRAKE SWITCH POWER SUPPLY

1. Turn ignition switch OFF.
2. Disconnect ASCD brake switch (1) harness connector.
- Stop lamp switch (2)
- Brake pedal (3)
3. Turn ignition switch ON.

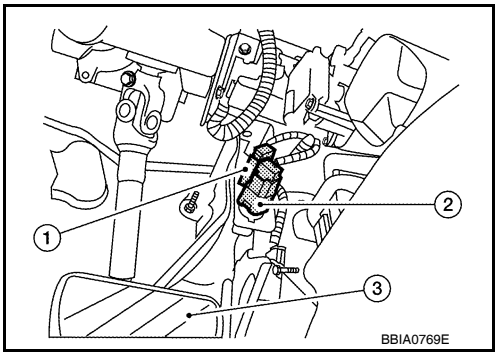

4. Check voltage between ASCD brake switch terminal 1 and ground with CONSULT-III or tester.

Voltage : Battery voltage

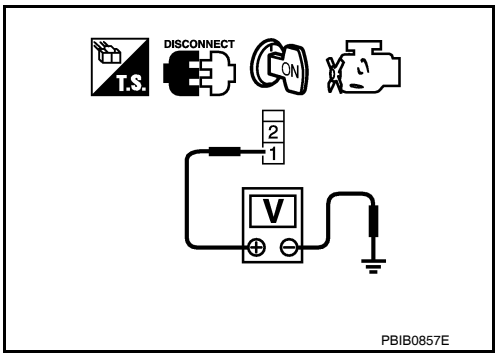

OK or NG

OK >> GO TO 8.
NG (M/T models)>>GO TO 4.
NG (CVT models)>>GO TO 6.

4. CHECK ASCD CLUTCH SWITCH POWER SUPPLY CIRCUIT

1. Turn ignition switch OFF.

2. Disconnect ASCD clutch switch (1) harness connector.
- Clutch pedal (2)
3. Turn ignition switch ON.

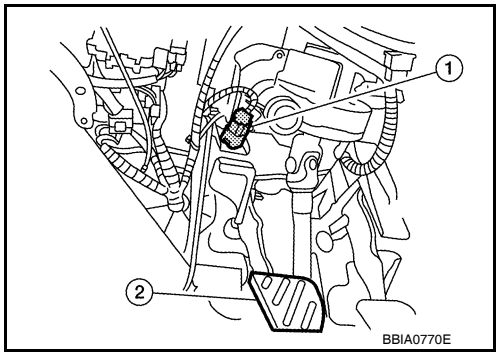

4. Check voltage between ASCD clutch switch terminal 1 and ground with CONSULT-III or tester.

Voltage : Battery voltage

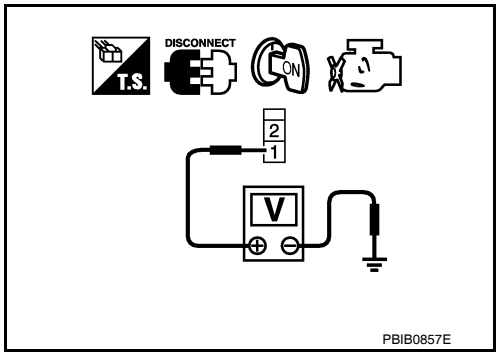

OK or NG

OK >> GO TO 7.
NG >> GO TO 5.

5. DETECT MALFUNCTIONING PART

Check the following.
- 10 A fuse
- Harness for open or short between ASCD clutch switch and fuse

>> Repair open circuit or short to ground or short to power in harness or connectors.

6. DETECT MALFUNCTIONING PART

Check the following.
- 10 A fuse
- Harness for open or short between ASCD brake switch and fuse

>> Repair open circuit or short to ground or short to power in harness or connectors.

7. CHECK ASCD CLUTCH SWITCH INPUT SIGNAL CIRCUIT FOR OPEN AND SHORT

1. Turn ignition switch OFF.
2. Check harness continuity between ASCD brake switch terminal 1 and ASCD clutch switch terminal 2. Refer to Wiring Diagram.

Continuity should exist.

3. Also check harness for short to ground and short to power.

OK or NG

OK >> GO TO 10.
NG >> Repair open circuit or short to ground or short to power in harness or connectors.

8. CHECK ASCD BRAKE SWITCH INPUT SIGNAL CIRCUIT FOR OPEN AND SHORT

1. Turn ignition switch OFF.
2. Disconnect ECM harness connector.
3. Check harness continuity between ECM terminal 100 and ASCD brake switch terminal 2. Refer to Wiring Diagram.

Continuity should exist.

4. Also check harness for short to ground and short to power.

OK or NG

OK >> GO TO 9.
NG >> Repair open circuit or short to ground or short to power in harness or connectors.

9. CHECK ASCD BRAKE SWITCH

Refer to EC-467, "Component Inspection".

OK or NG

OK >> GO TO 15.
NG >> Replace ASCD brake switch.

10. CHECK ASCD CLUTCH SWITCH

Refer to EC-467, "Component Inspection"

OK or NG

OK >> GO TO 15.
NG >> Replace ASCD clutch switch.

11. CHECK STOP LAMP SWITCH POWER SUPPLY CIRCUIT

1. Turn ignition switch OFF.
2. Disconnect stop lamp switch (2) harness connector.
- ASCD brake switch (1)
- Brake pedal (3)

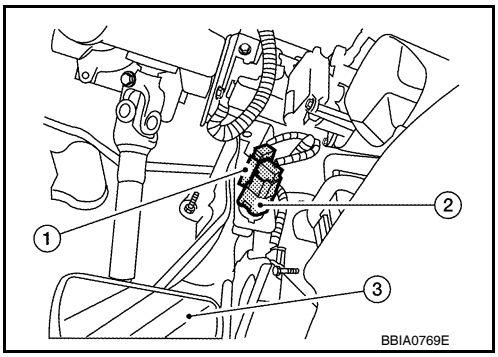

3. Check voltage between stop lamp switch terminal 1 and ground with CONSULT -III or tester.

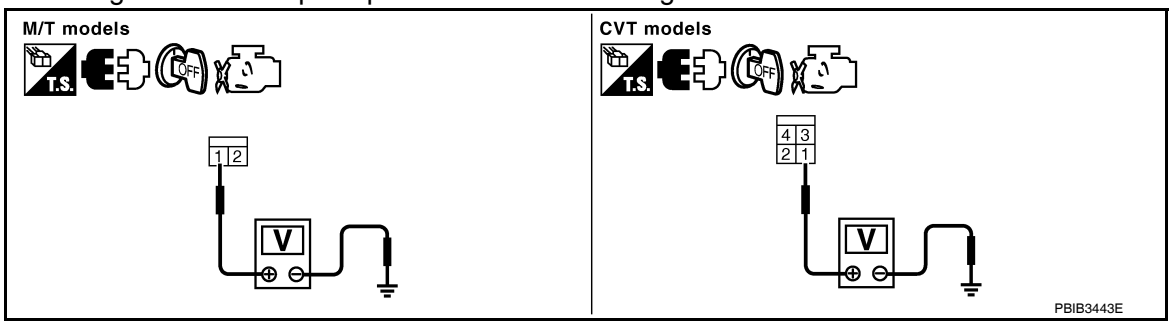

Voltage : Battery voltage

OK or NG

OK >> GO TO 13.
NG >> GO TO 12.

12. DETECT MALFUNCTIONING PART

Check the following.
- 10 A fuse
- Harness for open or short between stop lamp switch and battery

>> Repair open circuit or short to ground or short to power in harness or connectors.

13. CHECK STOP LAMP SWITCH INPUT SIGNAL CIRCUIT FOR OPEN AND SHORT

1. Disconnect ECM harness connector.
2. Check harness continuity between ECM terminal 99 and stop lamp switch terminal 2.
   Refer to Wiring Diagram.

Continuity should exist.

3. Also check harness for short to ground and short to power.

OK or NG

OK >> GO TO 14.
NG >> Repair open circuit or short to ground or short to power in harness or connectors.

14. CHECK STOP LAMP SWITCH

Refer to EC-467, "Component Inspection"

OK or NG

OK >> GO TO 15.
NG >> Replace stop lamp switch.

15. CHECK INTERMITTENT INCIDENT

Refer to EC-152.

>> **INSPECTION END**

Component Inspection

INFOID:0000000005284983

ASCD BRAKE SWITCH

1. Turn ignition switch OFF.
2. Disconnect ASCD brake switch harness connector.
3. Check continuity between ASCD brake switch terminals 1 and 2 under the following conditions.

Condition	Continuity
Brake pedal: Fully released.	Should exist.
Brake pedal: Slightly depressed.	Should not exist.

If NG, adjust ASCD brake switch installation, refer to BR-8, and perform step 3 again.

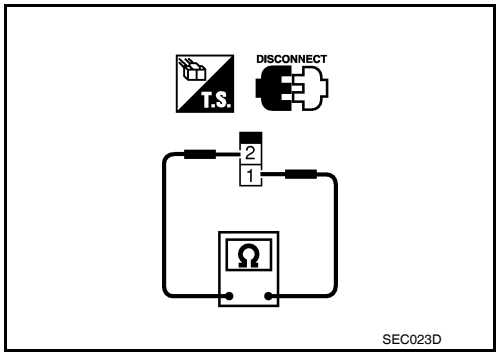

ASCD CLUTCH SWITCH

1. Turn ignition switch OFF.
2. Disconnect ASCD clutch switch harness connector.
3. Check continuity between ASCD clutch switch terminals 1 and 2 under the following conditions.

Condition	Continuity
Clutch pedal: Fully released.	Should exist.
Clutch pedal: Slightly depressed.	Should not exist.

If NG, adjust ASCD clutch switch installation, refer to CL-6, and perform step 3 again.

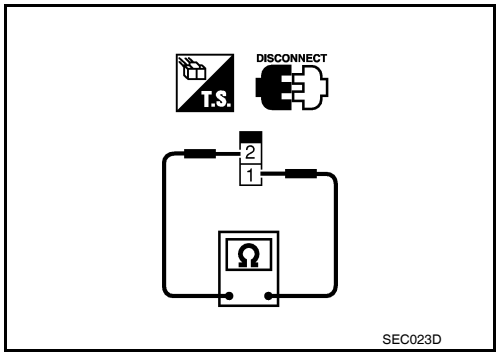

STOP LAMP SWITCH

1. Turn ignition switch OFF.
2. Disconnect stop lamp switch harness connector.

3. Check continuity between stop lamp switch terminals 1 and 2 under the following conditions.

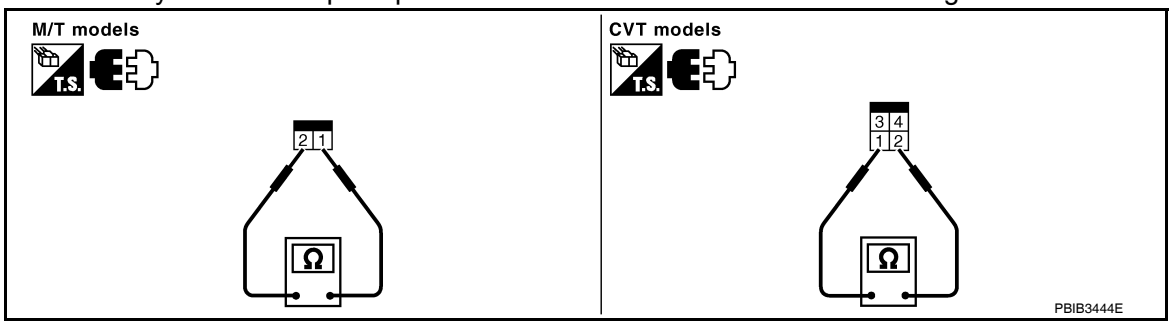

Condition	Continuity
Brake pedal: Fully released.	Should not exist.
Brake pedal: Slightly depressed.	Should exist.

If NG, adjust stop lamp switch installation, refer to BR-8, and perform step 3 again.

DTC P1574 ASCD VEHICLE SPEED SENSOR

Component Description

INFOID:0000000005284984

The ECM receives two vehicle speed signals via CAN communication line. One is sent from “ABS actuator and electric unit (control unit)” or combination meter, and the other is from TCM (Transmission control module). The ECM uses these signals for ASCD control. Refer to EC-42 for ASCD functions.

On Board Diagnosis Logic

INFOID:0000000005284985

- **This self-diagnosis has the one trip detection logic.**
- **The MIL will not light up for this self-diagnosis.**

NOTE:
- **If DTC P1574 is displayed with DTC UXXXX, first perform the trouble diagnosis for DTC UXXXX.**
- **If DTC P1574 is displayed with DTC P0500, first perform the trouble diagnosis for DTC P0500. Refer to EC-412.**
- **If DTC P1574 is displayed with DTC P0605, first perform the trouble diagnosis for DTC P0605. Refer to EC-421.**
- **If DTC P1574 is displayed with DTC P0607, first perform the trouble diagnosis for DTC P0607. Refer to EC-423.**

DTC No.	Trouble Diagnosis Name	DTC Detecting Condition	Possible Cause
P1574 1574	ASCD vehicle speed sensor	ECM detects a difference between two vehicle speed signals is out of the specified range.	• Harness or connectors (CAN communication line is open or shorted.) • TCM (CVT models) • ABS actuator and electric unit (control unit) • Combination meter • ECM

DTC Confirmation Procedure

INFOID:0000000005284986

CAUTION:
Always drive vehicle at a safe speed.
NOTE:
If DTC Confirmation Procedure has been previously conducted, always turn ignition switch OFF and wait at least 10 seconds before conducting the next test.
TESTING CONDITION:
Step 3 may be conducted with the drive wheels lifted in the shop or by driving the vehicle. If a road test is expected to be easier, it is unnecessary to lift the vehicle.

WITH CONSULT-III

1. Start engine.
2. Select “DATA MONITOR” mode with CONSULT-III.
3. Drive the vehicle at more than 40 km/h (25MPH).
4. Check DTC.
5. If DTC is detected, go to EC-469, "Diagnosis Procedure".

WITH GST

Follow the procedure “WITH CONSULT-III” above.

Diagnosis Procedure

INFOID:0000000005284987

1. CHECK DTC WITH TCM

Check DTC with TCM. Refer to CVT-24.

OK or NG

OK >> GO TO 2.
NG >> Perform trouble shooting relevant to DTC indicated.

2. CHECK DTC WITH “ABS ACTUATOR AND ELECTRIC UNIT”

Refer to BRC-10.

OK or NG

OK >> GO TO 3.
NG >> Repair or replace.

3. CHECK COMBINATION METER

Check combination meter function.
Refer to DI-6.

>> **INSPECTION END**

DTC P1715 INPUT SPEED SENSOR

Description

INFOID:0000000005284988

ECM receives input speed sensor signal from TCM through CAN communication line. ECM uses this signal for engine control.

CONSULT-III Reference Value in Data Monitor Mode

INFOID:0000000005284989

Specification data are reference values.

Monitor item	Condition	Specification
I/P PULLY SPD	• Vehicle speed: More than 20 km/h (12MPH)	Almost the same speed as the tachometer indication

On Board Diagnosis Logic

INFOID:0000000005284990

NOTE:
- **If DTC P1715 is displayed with DTC UXXXX, first perform the trouble diagnosis for DTC UXXXX.**
- **If DTC P1715 is displayed with DTC P0335, first perform the trouble diagnosis for DTC P0335. Refer to EC-317.**
- **If DTC P1715 is displayed with DTC P0340 first perform the trouble diagnosis for DTC P0340. Refer to EC-324.**
- **If DTC P1715 is displayed with DTC P0605, first perform the trouble diagnosis for DTC P0605. Refer to EC-421.**
- **If DTC P1715 is displayed with DTC P0607, first perform the trouble diagnosis for DTC P0607. Refer to EC-423.**

The MIL will not light up for this self-diagnosis.

DTC No.	Trouble diagnosis name	DTC detecting condition	Possible cause
P1715 1715	Input speed sensor (TCM output)	Input speed sensor signal is different from the theoretical value calculated by ECM from output speed sensor signal and engine rpm signal.	• Harness or connectors (CAN communication line is open or shorted) • Harness or connectors (Input speed sensor circuit is open or shorted) • TCM

DTC Confirmation Procedure

INFOID:0000000005284991

CAUTION:
Always drive vehicle at a safe speed.
NOTE:
If DTC Confirmation Procedure has been previously conducted, always turn ignition switch OFF and wait at least 10 seconds before conducting the next test.

WITH CONSULT-III

1. Turn ignition switch ON.
2. Select “DATA MONITOR” mode with CONSULT-III.
3. Start engine.
4. Drive vehicle at a speed of more than 50 km/h (31 MPH) for at least 5 seconds.
5. Check 1st trip DTC.
6. If 1st trip DTC is detected, go to EC-471, "Diagnosis Procedure".

WITH GST

Follow the procedure “WITH CONSULT-III” above.

Diagnosis Procedure

INFOID:0000000005284992

1. CHECK DTC WITH TCM

Check DTC with TCM. Refer to CVT-24.

OK or NG

OK >> GO TO 2.
NG >> Perform trouble shooting relevant to DTC indicated.

2. REPLACE TCM

Replace TCM. Refer to CVT-27.

>> **INSPECTION END**

DTC P1805 BRAKE SWITCH

Description

INFOID:0000000005284993

Brake switch signal is applied to the ECM through the stop lamp switch when the brake pedal is depressed. This signal is used mainly to decrease the engine speed when the vehicle is driving.

CONSULT-III Reference Value in Data Monitor Mode

INFOID:0000000005284994

Specification data are reference values.

Monitor item	Condition		Specification
BRAKE SW	• Ignition switch: ON	Brake pedal: Fully released	OFF
		Brake pedal: Slightly depressed	ON

On Board Diagnosis Logic

INFOID:0000000005284995

The MIL will not light up for this self-diagnosis.

DTC No.	Trouble diagnosis name	DTC detecting condition	Possible cause
P1805 1805	Brake switch	A brake switch signal is not sent to ECM for extremely long time while the vehicle is driving.	• Harness or connectors (Stop lamp switch circuit is open or shorted.) • Stop lamp switch

FAIL-SAFE MODE

When the malfunction is detected, the ECM enters in fail-safe mode.

Engine operation condition in fail-fail safe mode	
ECM controls the electric throttle control actuator by regulating the throttle opening to a small range. Therefore, acceleration will be poor.	
Vehicle condition	Driving condition
Engine: Idling	Normal
Accelerating	Poor acceleration

DTC Confirmation Procedure

INFOID:0000000005284996

1. Turn ignition switch ON.
2. Fully depress the brake pedal for at least 5 seconds.
3. Erase the DTC with CONSULT-III.
4. Check 1st trip DTC.
5. If 1st trip DTC is detected, go to EC-475, "Diagnosis Procedure".

Wiring Diagram

INFOID:0000000005284997

EC-BRK/SW-01

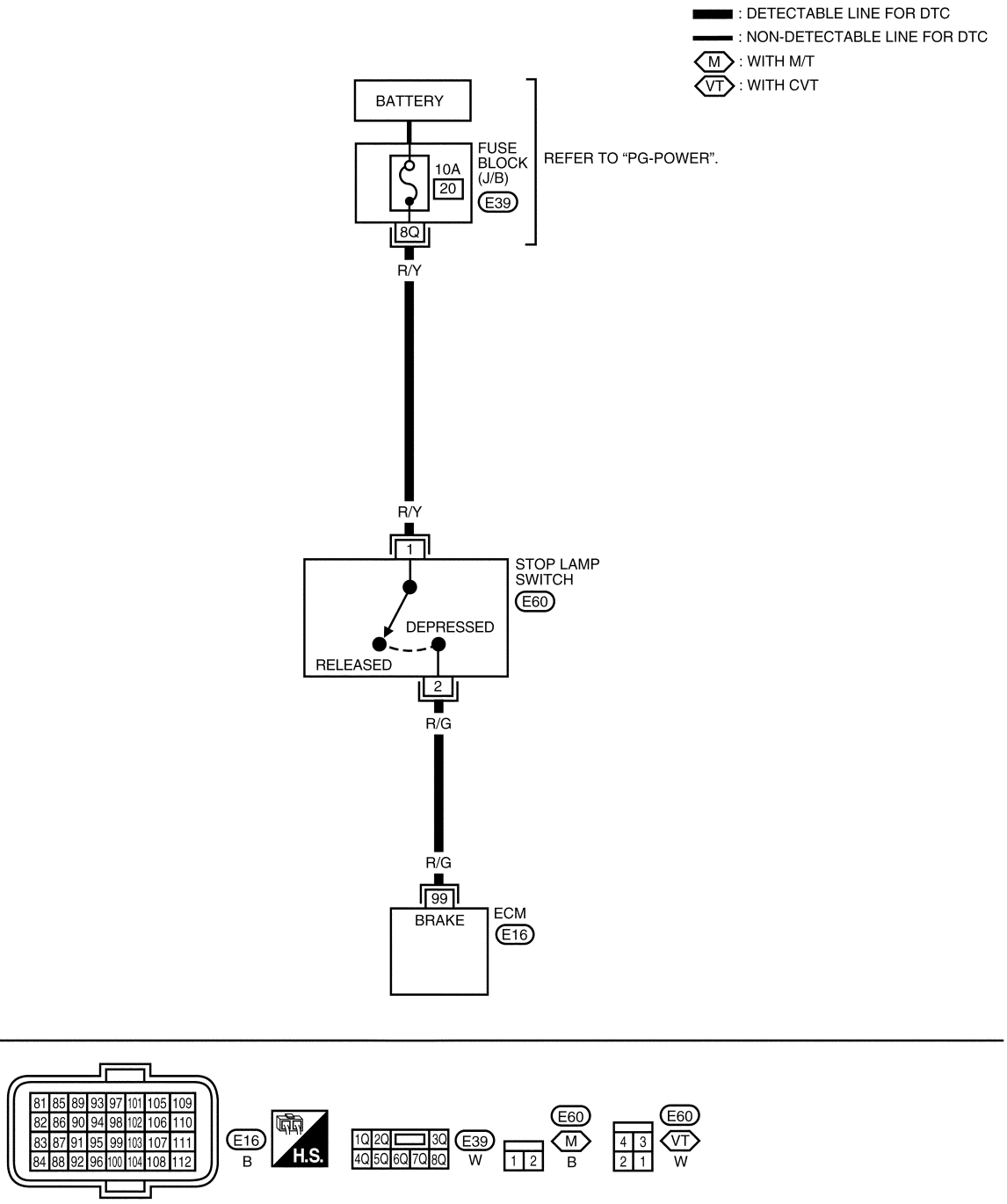

Specification data are reference values and are measured between each terminal and ground.

CAUTION:

Do not use ECM ground terminals when measuring input/output voltage. Doing so may result in damage to the ECM's transistor. Use a ground other than ECM terminals, such as the ground.

TERMINAL NO.	WIRE COLOR	ITEM	CONDITION	DATA (DC Voltage)
99	R/G	Stop lamp switch	**[Ignition switch: OFF]** • Brake pedal: Fully released	Approximately 0 V
			[Ignition switch: OFF] • Brake pedal: Slightly depressed	BATTERY VOLTAGE (11 - 14 V)

Diagnosis Procedure

INFOID:0000000005284998

1. CHECK STOP LAMP SWITCH CIRCUIT

1. Turn ignition switch OFF.
2. Check the stop lamp when depressing and releasing the brake pedal.

Brake pedal	Stop lamp
Fully released	Not illuminated
Slightly depressed	Illuminated

OK or NG

OK >> GO TO 4.
NG >> GO TO 2.

2. CHECK STOP LAMP SWITCH POWER SUPPLY CIRCUIT

1. Disconnect stop lamp switch (2) harness connector.
- ASCD brake switch (1)
- Brake pedal (3)

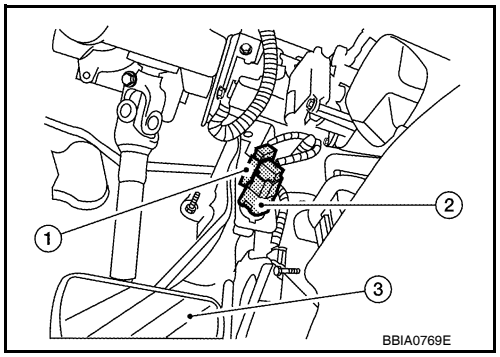

2. Check voltage between stop lamp switch terminal 1 and ground with CONSULT-III or tester.

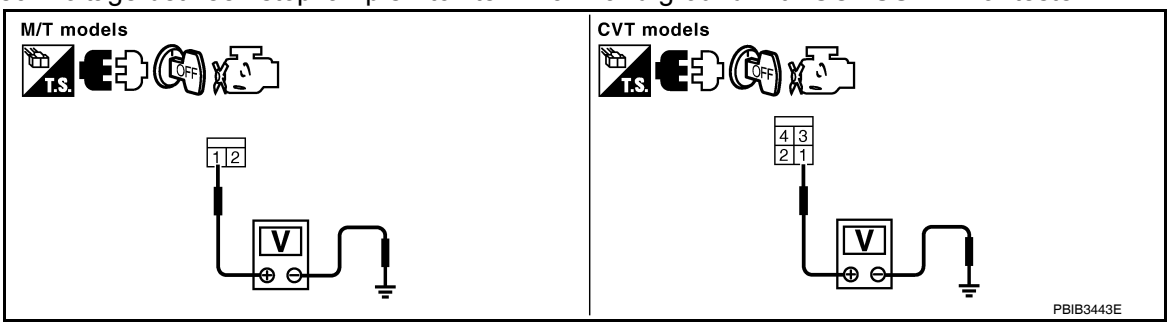

Voltage : Battery voltage

OK or NG

OK >> GO TO 4.
NG >> GO TO 3.

3. DETECT MALFUNCTIONING PART

Check the following.
- 10 A fuse
- Harness for open and short between stop lamp switch and battery

>> Repair open circuit or short to ground or short to power in harness or connectors.

4. CHECK STOP LAMP SWITCH INPUT SIGNAL CIRCUIT FOR OPEN AND SHORT

1. Disconnect stop lamp switch harness connector.
2. Disconnect ECM harness connector.
3. Check harness continuity between stop lamp switch terminal 2 and ECM terminal 99. Refer to Wiring Diagram.

Continuity should exist.

4. Also check harness for short to ground and short to power.

OK or NG

OK >> GO TO 5.
NG >> Repair open circuit or short to ground or short to power in harness connectors.

5. CHECK STOP LAMP SWITCH

Refer to EC-476, "Component Inspection".

OK or NG

OK >> GO TO 6.
NG >> Replace stop lamp switch.

6. CHECK INTERMITTENT INCIDENT

Refer to EC-152.

>> **INSPECTION END**

Component Inspection

INFOID:0000000005284999

STOP LAMP SWITCH

1. Turn ignition switch OFF.
2. Disconnect stop lamp switch harness connector.
3. Check continuity between stop lamp switch terminals 1 and 2 under the following conditions.

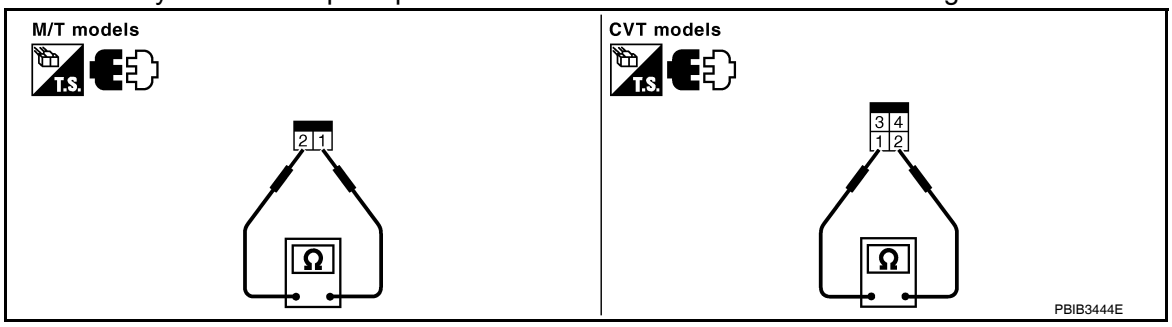

Condition	Continuity
Brake pedal: Fully released.	Should not exist.
Brake pedal: Slightly depressed.	Should exist.

If NG, adjust stop lamp switch installation, refer to BR-8, and perform step 3 again.

DTC P2004 TUMBLE CONTROL VALVE

Description

INFOID:0000000005285000

SYSTEM DESCRIPTION

Sensor	Input signal to ECM	ECM function	Actuator
Crankshaft position sensor (POS)	Engine speed*	Tumble control valve control	Tumble control valve motor
Camshaft position sensor (PHASE)			
Battery	Battery voltage*		
Engine coolant temperature sensor	Engine coolant temperature		
Accelerator pedal position sensor	Accelerator pedal position		
Tumble control valve position sensor	Tumble control valve position		

*: ECM determines the start signal status by the signals of engine speed and battery voltage.

Tumble control valve has a valve portion in the intake passage of each cylinder.
While idling and during low engine coolant temperature, the tumble control valve closes. Thus the velocity of the air in the intake passage increases, promoting the vaporization of the fuel and producing a tumble in the combustion chamber.
Because of this operation, this system tends to increase the burning speed of the gas mixture, improve fuel consumption, and increase the stability in running conditions.
Also, except when idling and during low engine coolant temperature, this system opens the tumble control valve.
In this condition, this system tends to increase power by improving intake efficiency via reduction of intake flow resistance.
The tumble control valve is operated by the ECM.

COMPONENT DESCRIPTION

Tumble control valve (2) is installed in the intake manifold adapter (1).
Tumble control valve actuator (3) is connected to the front end of the valve shaft.
Tumble control valve actuator consists of motor and position sensor, etc.
The motor opens or closes the valve by the output signal of the ECM.
The sensor consists of a permanent magnet and Hall IC. It senses the valve shaft movement and feeds the voltage signals to the ECM.

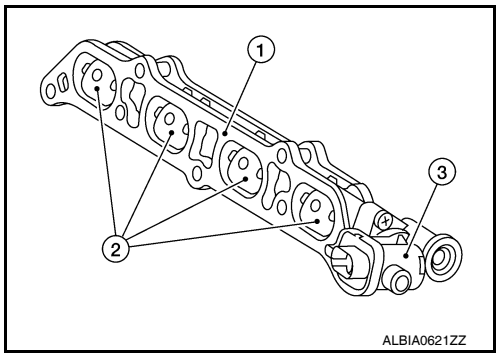

CONSULT-III Reference Value in Data Monitor Mode

INFOID:0000000005285001

Specification data are reference values.

Monitor item	Condition		Specification
SWRL CONT S/V	• Engine coolant temperature: Between 5°C (41°F) and 45°C (113°F) • Engine speed: Less than 3,200 rpm	Accelerator pedal: Fully released	ON
		Accelerator pedal: Slightly depressed	OFF

On Board Diagnosis Logic

INFOID:0000000005285002

DTC No.	Trouble diagnosis name	DTC detecting condition	Possible cause
P2004	Tumble control valve stuck	The target angle of tumble control valve controlled by ECM and the input signal from tumble control valve position sensor is not in the normal range.	• Harness or connectors (Tumble control valve motor circuit is open or shorted.) (Tumble control valve position sensor circuit is open or shorted.) (Accelerator pedal position sensor 2 circuit is shorted.) [Crankshaft position sensor (POS) circuit is shorted.] (EVAP control system pressure sensor circuit is shorted.) (Refrigerant pressure sensor circuit is shorted.) • Tumble control valve actuator (Tumble control valve motor) (Tumble control valve position sensor) • Accelerator pedal position sensor • Crankshaft position sensor (POS) • EVAP control system pressure sensor • Refrigerant pressure sensor

DTC Confirmation Procedure

INFOID:0000000005285003

NOTE:
If DTC Confirmation Procedure has been previously conducted, always turn ignition switch OFF and wait at least 10 seconds before conducting the next test.
TESTING CONDITION:
- **Before performing the following procedure, confirm that battery voltage is more than 11 V at idle.**
- **Always perform the test at a temperature above 0°C (32°F)**

WITH CONSULT-III

1. Turn ignition switch ON.
2. Select “DATA MONITOR” mode with CONSULT-III.
3. Make sure that “COOLAN TEMP/S” indicates between 5°C (41°F) to 45°C (113°F).
   If not, cool engine down or warm engine up until “COOLAN TEMP/S” indicates between 5°C (41°F) to 45°C (113°F). Then go to the following steps.
4. Fully release accelerator pedal and wait at least 5 seconds.
5. Depress accelerator pedal and wait at least 5 seconds.
6. Check 1st trip DTC.
7. If 1st trip DTC is detected, go to EC-480, "Diagnosis Procedure".

WITH GST

Following the procedure “WITH CONSULT-III” above.

Wiring Diagram

INFOID:0000000005285004

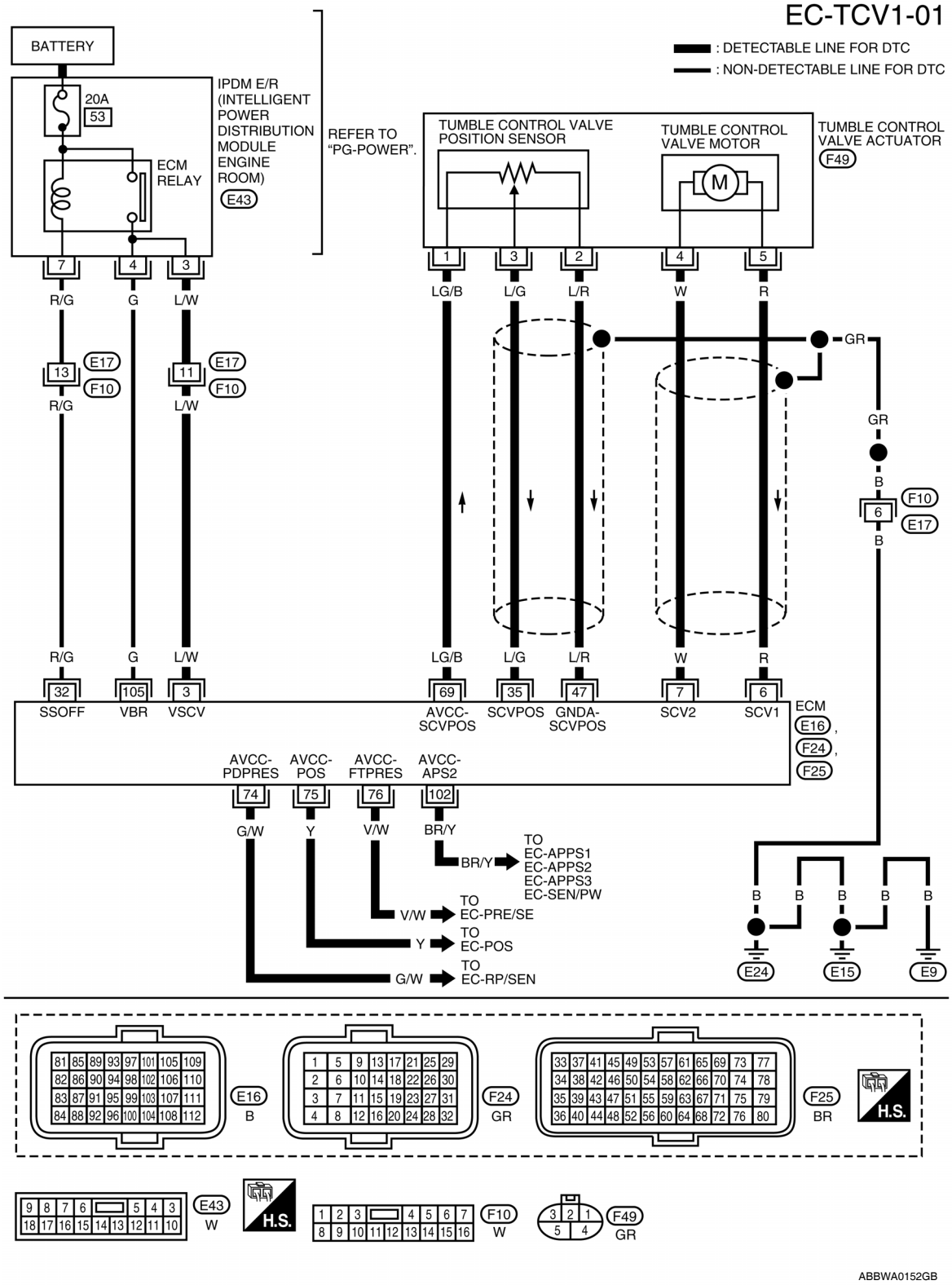

Specification data are reference values and are measured between each terminal and ground.
Pulse signal is measured by CONSULT-III.

CAUTION:

Do not use ECM ground terminals when measuring input/output voltage. Doing so may result in damage to the ECM's transistor. Use a ground other than ECM terminals, such as the ground.

TERMINAL NO.	WIRE COLOR	ITEM	CONDITION	DATA (DC Voltage)
3	L/W	Tumble control vale motor power supply	**[Ignition switch: ON]**	BATTERY VOLTAGE (11 - 14 V)
6	R	Tumble control valve motor (Open)	**[Ignition switch: ON → OFF]** • For a few seconds after turning ignition switch ON	0 V ↓ BATTERY VOLTAGE (11 - 14 V) ↓ 0 V
7	W	Tumble control valve motor (Close)	**[Ignition switch: OFF → ON]** • For a few seconds after turning ignition switch ON	0 V ↓ BATTERY VOLTAGE (11 - 14 V) ↓ 0 V
35	L/G	Tumble control valve position sensor	**[Engine is running]** • Engine coolant temperature: Between 5°C (41°F) and 45°C (113°F) • Engine speed: Less than 3,200 rpm • Accelerator pedal: Fully released	Less than 1.2 V
			[Engine is running] • Engine coolant temperature: Between 5°C (41°F) and 45°C (113°F) • Accelerator pedal: Slightly depressed	More than 2.9 V
47	L/R	Sensor ground (Tumble control valve position sensor)	**[Engine is running]** • **Warm-up condition** • Idle speed	Approximately 0 V
69	LG/B	Sensor power supply (Tumble control valve position sensor)	**[Ignition switch: ON]**	Approximately 5 V
74	G/W	Sensor power supply (Refrigerant pressure sensor)	**[Ignition switch: ON]**	Approximately 5 V
75	Y	Sensor power supply [Crankshaft position sensor (POS)]	**[Ignition switch: ON]**	Approximately 5 V
76	V/W	EVAP control system pressure sensor power supply	**[Ignition switch: ON]**	Approximately 5 V
102	BR/Y	Sensor power supply (Accelerator pedal position sensor 2)	**[Ignition switch: ON]**	Approximately 5 V

★: Average voltage for pulse signal (Actual pulse signal can be confirmed by oscilloscope.)

Diagnosis Procedure

INFOID:0000000005285005

1. CHECK GROUND CONNECTIONS

1. Turn ignition switch OFF.

2. Loosen and retighten ground screws on the body.
   Refer to EC-157, "Ground Inspection".
- ⇦: Vehicle front
- Body ground (1)

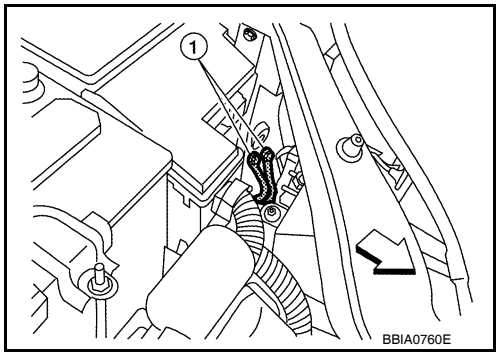

OK or NG

OK >> GO TO 2.
NG >> Repair or replace ground connections.

2. CHECK TUMBLE CONTROL VALVE MOTOR POWER SUPPLY CIRCUIT-I

Check the voltage between ECM terminal 3 and ground under the following conditions with CONSULT-III or tester.

Ignition switch	Voltage
OFF	Approximately 0 V
ON	Battery voltage (11 - 14 V)

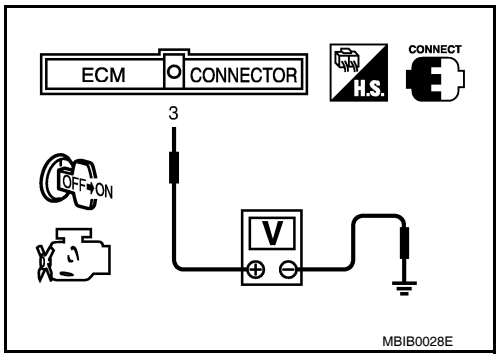

OK or NG

OK >> GO TO 5.
NG >> GO TO 3.

3. CHECK TUMBLE CONTROL VALVE MOTOR POWER SUPPLY CIRCUIT-II

1. Turn ignition switch OFF.
2. Disconnect ECM harness connector.
3. Disconnect IPDM E/R harness connector.
4. Check harness continuity between ECM terminal 3 and IPDM E/R terminal 3. Refer to Wiring Diagram.

Continuity should exist.

5. Also check harness for short to ground and short to power.

OK or NG

OK >> Refer to EC-154, "Diagnosis Procedure".
NG >> GO TO 4.

4. DETECT MALFUNCTIONING PART

Check the following.
- Harness connectors E17, F10
- Harness for open or short between ECM and IPDM E/R

>> Repair open circuit or short to ground or short to power in harness or connectors.

5. CHECK TUMBLE CONTROL VALVE MOTOR OUTPUT SIGNAL CIRCUIT FOR OPEN AND SHORT

1. Disconnect tumble control valve actuator harness connector.
2. Disconnect ECM harness connector.
3. Check harness continuity between the following terminals.
   Refer to Wiring Diagram.

Tumble control valve actuator terminal	ECM terminal	Continuity
4	6	Should not existed
	7	Should existed
5	6	Should existed
	7	Should not existed

4. Also check harness for short to ground and short to power.

OK or NG

OK >> GO TO 6.
NG >> Repair open circuit or short to ground or short to power in harness or connectors.

6. CHECK TUMBLE CONTROL VALVE POSITION SENSOR POWER SUPPLY CIRCUIT-I

1. Reconnect ECM harness connector disconnected.
2. Turn ignition switch ON.
3. Check voltage between tumble control valve actuator terminal 1 and ground with CONSULT-III or tester.

Voltage : Battery voltage

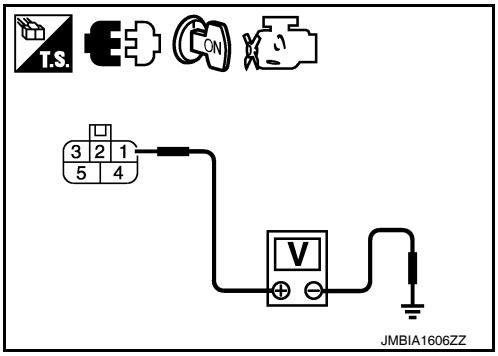

OK or NG

YES >> GO TO 15.
NO >> GO TO 7.

7. CHECK TUMBLE CONTROL VALVE POSITION SENSOR POWER SUPPLY CIRCUIT-II

1. Turn ignition switch OFF.
2. Disconnect ECM harness connector.
3. Check harness continuity between tumble control valve actuator terminal 1 and ECM terminal 69. Refer to Wiring Diagram.

Continuity should exist.

OK or NG

OK >> GO TO 8.
NG >> Repair open circuit.

8. CHECK POWER SUPPLY CIRCUITS

Check harness for short to power and short to ground, between the following terminals.

ECM terminal	Sensor terminal	Reference Wiring Diagram
69	Tumble control valve actuator terminal 1	EC-479, "Wiring Diagram"
74	Refrigerant pressure sensor terminal 3	EC-571, "Wiring Diagram"
75	Crankshaft position sensor (POS) terminal 1	EC-319, "Wiring Diagram"
76	EVAP control system pressure sensor terminal 3	EC-378, "Wiring Diagram"
102	APP sensor terminal 5	EC-514, "Wiring Diagram"

OK or NG

OK >> GO TO 9.
NG >> Repair short to ground or short to power in harness or connectors.

9. CHECK REFRIGERANT PRESSURE SENSOR

Refer to MTC-27.

OK or NG

OK >> GO TO 10.
NG >> Replace refrigerant pressure sensor.

10. CHECK CRANKSHAFT POSITION SENSOR (POS)

Refer to EC-323, "Component Inspection".

OK or NG

OK >> GO TO 11.
NG >> Replace crankshaft position sensor (POS).

11. CHECK EVAP CONTROL SYSTEM PRESSURE SENSOR

Refer to EC-382, "Component Inspection".

OK or NG

OK >> GO TO 12.
NG >> Replace EVAP control system pressure sensor.

12. CHECK REFRIGERANT PRESSURE SENSOR

Refer to MTC-27.

OK or NG

OK >> GO TO 13.
NG >> Replace refrigerant pressure sensor.

13. CHECK APP SENSOR

Refer to EC-517, "Component Inspection".

OK or NG

OK >> GO TO 18.
NG >> GO TO 14.

14. REPLACE ACCELERATOR PEDAL ASSEMBLY

1. Replace accelerator pedal assembly.
2. Perform EC-99, "Accelerator Pedal Released Position Learning".
3. Perform EC-99, "Throttle Valve Closed Position Learning".
4. Perform EC-99, "Idle Air Volume Learning".

>> **INSPECTION END**

15. CHECK TUMBLE CONTROL VALVE POSITION SENSOR GROUND CIRCUIT FOR OPEN AND SHORT

1. Turn ignition switch OFF.
2. Disconnect ECM harness connector.
3. Check harness continuity between tumble control valve actuator terminal 2 and ECM terminal 47. Refer to Wiring Diagram.

Continuity should exist.

4. Also check harness for short to ground and short to power.

OK or NG

OK >> GO TO 16.
NG >> Repair open circuit or short to ground or short to power in harness or connectors.

16. CHECK TUMBLE CONTROL VALVE POSITION SENSOR INPUT SIGNAL CIRCUIT FOR OPEN AND SHORT

1. Check harness continuity between tumble control valve actuator terminal 3 and ECM terminal 35. Refer to Wiring Diagram.

Continuity should exist.

2. Also check harness for short to ground and short to power.

OK or NG

OK >> GO TO 17.
NG >> Repair open circuit or short to ground or short to power in harness or connectors.

17. CHECK TUMBLE CONTROL VALVE

Refer to EC-484, "Component Inspection".

OK or NG

OK >> GO TO 18.
NG >> Replace intake manifold adapter.

18. CHECK INTERMITTENT INCIDENT

Refer to EC-152, "Description".

OK or NG

OK >> Replace intake manifold adapter.
NG >> Repair or replace harness or connectors.

Component Inspection

INFOID:0000000005285006

TUMBLE CONTROL VALVE

WITH CONSULT-III

1. Turn ignition switch OFF.
2. Remove intake manifold adapter.
3. Visually check the valve for damage and check if foreign matter is caught between the valve and the housing.
4. Connect tumble control valve actuator harness connector.
5. Turn ignition switch ON.
6. Perform “TUMBLE CONTROL VALVE” in “ACTIVE TEST” mode with CONSULT-III.
7. Touch “ON/OFF” and check that the valve opens and closes.

WITHOUT CONSULT-III

1. Turn ignition switch OFF.
2. Remove intake manifold adapter.
3. Visually check the valve for damage and check if foreign matter is caught between the valve and the housing.
4. Supply tumble control valve actuator terminals with battery voltage within 2 seconds and check operation.

Tumble control valve	Terminal	
	(+)	(-)
Close	4	5
Open	5	4

CAUTION:
Do not apply 12 V DC continuously for 30 seconds or more. Doing so may result in damage to the coil in tumble control valve motor.

Removal and Installation

INFOID:0000000005285007

INTAKE MANIFOLD ADAPTER

Refer to EM-19, "Removal and Installation".

DTC P2014 TUMBLE CONTROL VALVE POSITION SENSOR

Component Description

INFOID:0000000005285008

Tumble control valve position sensor is built into the tumble control valve actuator (3).

1 : Intake manifold adapter
2 : Tumble control valve

The sensor consists of a permanent magnet and Hall IC. It senses the valve shaft movement and feeds the voltage signals to the ECM.

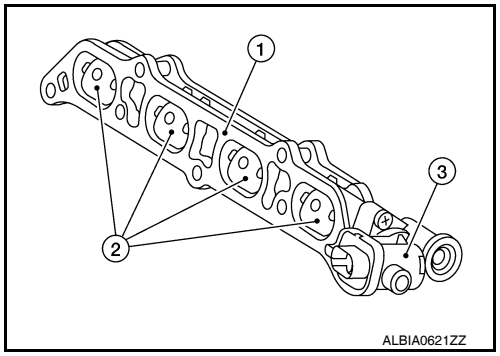

CONSULT-III Reference Value in Data Monitor Mode

INFOID:0000000005285009

Specification data are reference values.

Monitor item	Condition		Specification
TUMBLE POS SEN	• Engine coolant temperature: Between 5°C (41°F) and 45°C (113°F) • Engine speed: Less than 3,200 rpm	Accelerator pedal: Fully released	Less than 1.2 V
		Accelerator pedal: Slightly depressed	More than 2.9 V

On Board Diagnosis Logic

INFOID:0000000005285010

DTC No.	Trouble diagnosis name	DTC detecting condition	Possible cause
P2014	Tumble control valve position sensor circuit	An excessively low or high voltage from the sensor is sent to ECM.	• Harness or connectors (Tumble control valve position sensor circuit is open or shorted.) (Accelerator pedal position sensor 2 circuit is shorted.) [Crankshaft position sensor (POS) circuit is shorted.] (EVAP control system pressure sensor circuit is shorted.) (Refrigerant pressure sensor circuit is shorted.) • Tumble control valve actuator (Tumble control valve position sensor) • Accelerator pedal position sensor (APP sensor 2) • Crankshaft position sensor (POS) • EVAP control system pressure sensor • Refrigerant pressure sensor

DTC Confirmation Procedure

INFOID:0000000005285011

NOTE:
If DTC Confirmation Procedure has been previously conducted, always turn ignition switch OFF and wait at least 10 seconds before conducting the next test.

TESTING CONDITION:
Before performing the following procedure, confirm that battery voltage is more than 11 V at idle.

1. Start engine and let it idle for 5 second.
2. Check 1st trip DTC.
3. If 1st trip DTC is detected, go to EC-487, "Diagnosis Procedure".

Wiring Diagram

INFOID:0000000005285012

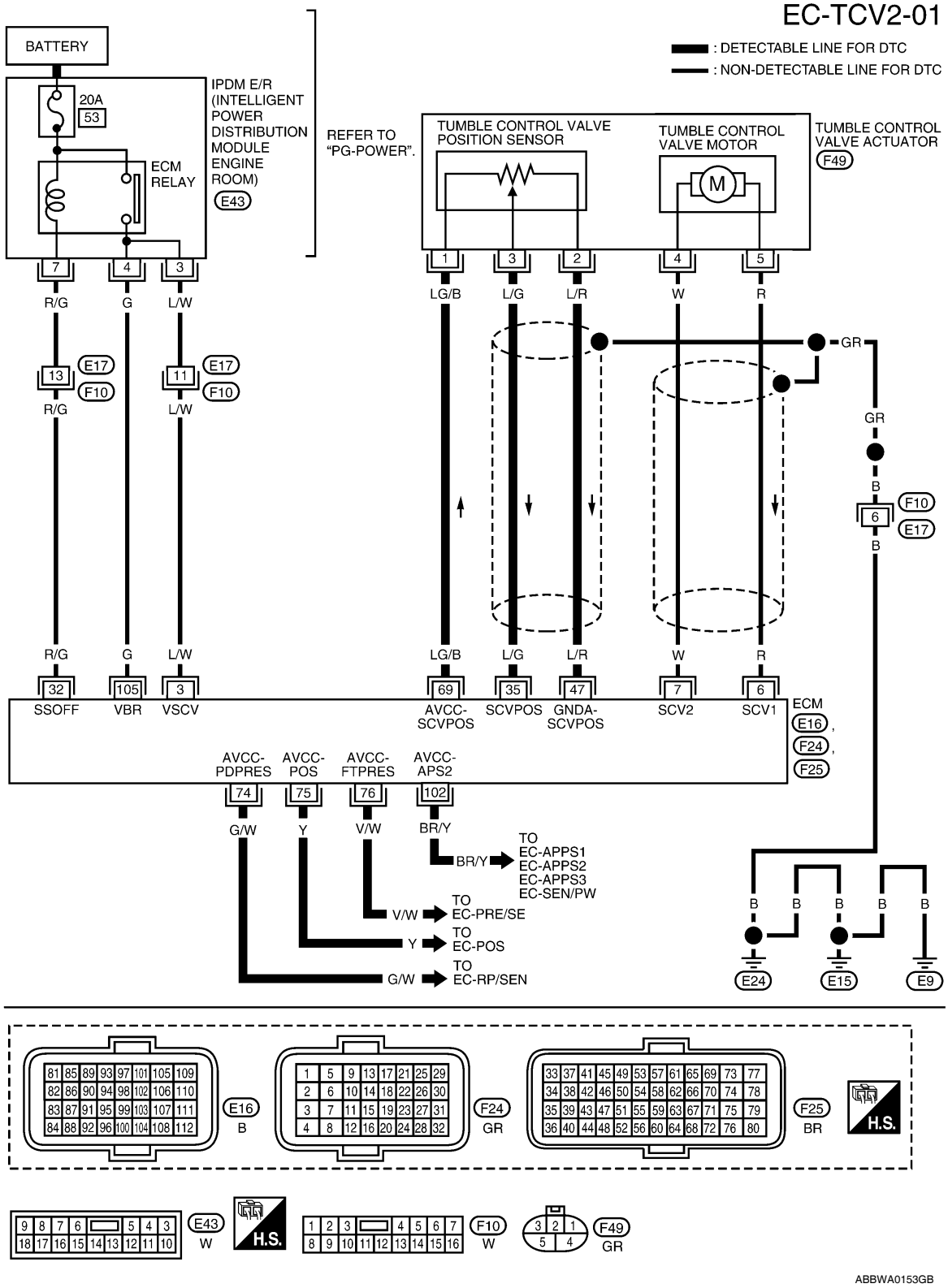

Specification data are reference values and are measured between each terminal and ground.
Pulse signal is measured by CONSULT-III.

CAUTION:

Do not use ECM ground terminals when measuring input/output voltage. Doing so may result in damage to the ECM's transistor. Use a ground other than ECM terminals, such as the ground.

TERMINAL NO.	WIRE COLOR	ITEM	CONDITION	DATA (DC Voltage)
3	L/W	Tumble control vale motor power supply	**[Ignition switch: ON]**	BATTERY VOLTAGE (11 - 14 V)
6	R	Tumble control valve motor (Open)	**[Ignition switch: ON → OFF]** • For a few seconds after turning ignition switch ON	0 V ↓ BATTERY VOLTAGE (11 - 14 V) ↓ 0 V
7	W	Tumble control valve motor (Close)	**[Ignition switch: OFF → ON]** • For a few seconds after turning ignition switch ON	0 V ↓ BATTERY VOLTAGE (11 - 14 V) ↓ 0 V
35	L/G	Tumble control valve position sensor	**[Engine is running]** • Engine coolant temperature: Between 5°C (41°F) and 45°C (113°F) • Engine speed: Less than 3,200 rpm • Accelerator pedal: Fully released	Less than 1.2 V
			[Engine is running] • Engine coolant temperature: Between 5°C (41°F) and 45°C (113°F) • Accelerator pedal: Slightly depressed	More than 2.9 V
47	L/R	Sensor ground (Tumble control valve position sensor)	**[Engine is running]** • **Warm-up condition** • Idle speed	Approximately 0 V
69	LG/B	Sensor power supply (Tumble control valve position sensor)	**[Ignition switch: ON]**	Approximately 5 V
74	G/W	Sensor power supply (Refrigerant pressure sensor)	**[Ignition switch: ON]**	Approximately 5 V
75	Y	Sensor power supply [Crankshaft position sensor (POS)]	**[Ignition switch: ON]**	Approximately 5 V
76	V/W	EVAP control system pressure sensor power supply	**[Ignition switch: ON]**	Approximately 5 V
102	BR/Y	Sensor power supply (Accelerator pedal position sensor 2)	**[Ignition switch: ON]**	Approximately 5 V

★: Average voltage for pulse signal (Actual pulse signal can be confirmed by oscilloscope.)

Diagnosis Procedure

INFOID:0000000005285013

1. CHECK GROUND CONNECTIONS

1. Turn ignition switch OFF.

2. Loosen and retighten ground screws on the body.
   Refer to EC-157, "Ground Inspection".
- ⇦: Vehicle front
- Body ground (1)

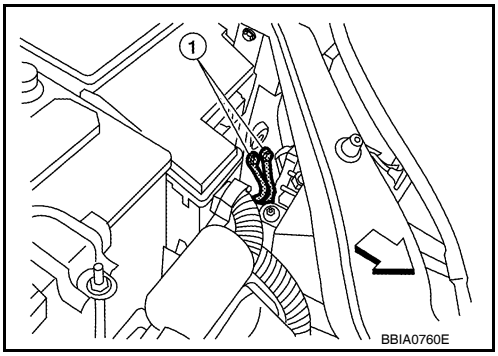

OK or NG

OK >> GO TO 2.
NG >> Repair or replace ground connections.

2. CHECK TUMBLE CONTROL VALVE POSITION SENSOR POWER SUPPLY CIRCUIT-I

1. Reconnect ECM harness connector disconnected.
2. Turn ignition switch ON.
3. Check voltage between tumble control valve actuator terminal 1 and ground with CONSULT-III or tester.

Voltage : Battery voltage

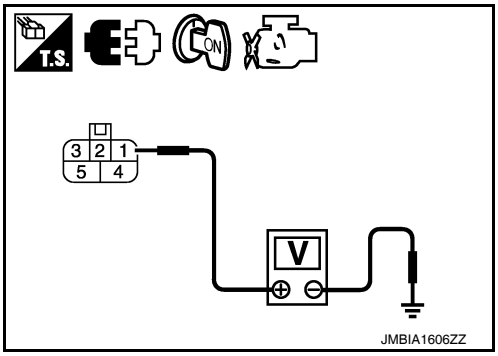

OK or NG

YES >> GO TO 10.
NO >> GO TO 3.

3. CHECK TUMBLE CONTROL VALVE POSITION SENSOR POWER SUPPLY CIRCUIT-II

1. Turn ignition switch OFF.
2. Disconnect ECM harness connector.
3. Check harness continuity between tumble control valve actuator terminal 1 and ECM terminal 69.
   Refer to Wiring Diagram.

Continuity should exist.

OK or NG

OK >> GO TO 4.
NG >> Repair open circuit.

4. CHECK POWER SUPPLY CIRCUITS

Check harness for short to power and short to ground, between the following terminals.

ECM terminal	Sensor terminal	Reference Wiring Diagram
69	Tumble control valve actuator terminal 1	EC-486, "Wiring Diagram"
74	Refrigerant pressure sensor terminal 3	EC-571, "Wiring Diagram"
75	Crankshaft position sensor (POS) terminal 1	EC-319, "Wiring Diagram"
76	EVAP control system pressure sensor terminal 3	EC-378, "Wiring Diagram"
102	APP sensor terminal 5	EC-514, "Wiring Diagram"

OK or NG

OK >> GO TO 5.
NG >> Repair short to ground or short to power in harness or connectors.

5. CHECK CRANKSHAFT POSITION SENSOR (POS)

Refer to EC-323, "Component Inspection".

OK or NG

OK >> GO TO 6.
NG >> Replace crankshaft position sensor (POS).

6. CHECK EVAP CONTROL SYSTEM PRESSURE SENSOR

Refer to EC-382, "Component Inspection".

OK or NG

OK >> GO TO 7.
NG >> Replace EVAP control system pressure sensor.

7. CHECK REFRIGERANT PRESSURE SENSOR

Refer to MTC-27.

OK or NG

OK >> GO TO 8.
NG >> Replace refrigerant pressure sensor.

8. CHECK APP SENSOR

Refer to EC-517, "Component Inspection".

OK or NG

OK >> GO TO 12.
NG >> GO TO 9.

9. REPLACE ACCELERATOR PEDAL ASSEMBLY

1. Replace accelerator pedal assembly.
2. Perform EC-99, "Accelerator Pedal Released Position Learning".
3. Perform EC-99, "Throttle Valve Closed Position Learning".
4. Perform EC-99, "Idle Air Volume Learning".

>> **INSPECTION END**

10. CHECK TUMBLE CONTROL VALVE POSITION SENSOR GROUND CIRCUIT FOR OPEN AND SHORT

1. Turn ignition switch OFF.
2. Disconnect ECM harness connector.
3. Check harness continuity between tumble control valve actuator terminal 2 and ECM terminal 47. Refer to Wiring Diagram.

Continuity should exist.

4. Also check harness for short to ground and short to power.

OK or NG

OK >> GO TO 11.
NG >> Repair open circuit or short to ground or short to power in harness or connectors.

11. CHECK TUMBLE CONTROL VALVE POSITION SENSOR INPUT SIGNAL CIRCUIT FOR OPEN AND SHORT

1. Check harness continuity between tumble control valve actuator terminal 3 and ECM terminal 35. Refer to Wiring Diagram.

Continuity should exist.

2. Also check harness for short to ground and short to power.

OK or NG

OK >> GO TO 12.
NG >> Repair open circuit or short to ground or short to power in harness or connectors.

12. CHECK INTERMITTENT INCIDENT

Refer to EC-152, "Description".

OK or NG

OK >> Replace intake manifold adapter.
NG >> Repair or replace harness or connectors.

Removal and Installation

INFOID:0000000005285014

INTAKE MANIFOLD ADAPTER

Refer to EM-19, "Removal and Installation".

DTC P2100, P2103 THROTTLE CONTROL MOTOR RELAY

Component Description

INFOID:0000000005285015

Power supply for the throttle control motor is provided to the ECM via throttle control motor relay. The throttle control motor relay is ON/OFF controlled by the ECM. When the ignition switch is turned ON, the ECM sends an ON signal to throttle control motor relay and battery voltage is provided to the ECM. When the ignition switch is turned OFF, the ECM sends an OFF signal to throttle control motor relay and battery voltage is not provided to the ECM.

CONSULT-III Reference Value in Data Monitor Mode

INFOID:0000000005285016

Specification data are reference values.

Monitor item	Condition	Specification
THRTL RELAY	• Ignition switch: ON	ON

On Board Diagnosis Logic

INFOID:0000000005285017

These self-diagnoses have one trip detection logic.

DTC No.	Trouble diagnosis name	DTC detecting condition	Possible cause
P2100 2100	Throttle control motor relay circuit open	ECM detects a voltage of power source for throttle control motor is excessively low.	• Harness or connectors (Throttle control motor relay circuit is open) • Throttle control motor relay
P2103 2103	Throttle control motor relay circuit short	ECM detects the throttle control motor relay is stuck ON.	• Harness or connectors (Throttle control motor relay circuit is shorted) • Throttle control motor relay

FAIL-SAFE MODE

When the malfunction is detected, ECM enters fail-safe mode and the MIL lights up.

Engine operating condition in fail-safe mode
ECM stops the electric throttle control actuator control, throttle valve is maintained at a fixed opening (approx. 5 degrees) by the return spring.

DTC Confirmation Procedure

INFOID:0000000005285018

NOTE:
If DTC Confirmation Procedure has been previously conducted, always turn ignition switch OFF and wait at least 10 seconds before conducting the next test.

PROCEDURE FOR DTC P2100

1. Turn ignition switch ON and wait at least 2 seconds.
2. Start engine and let it idle for 5 seconds.
3. Check DTC.
4. If DTC is detected, go to EC-493, "Diagnosis Procedure".

PROCEDURE FOR DTC P2103

TESTING CONDITION:
Before performing the following procedure, confirm that battery voltage is more than 10 V at idle.

1. Turn ignition switch ON and wait at least 1 second.
2. Check DTC.
3. If DTC is detected, go to EC-493, "Diagnosis Procedure".

Wiring Diagram

INFOID:0000000005285019

EC-ETC2-01

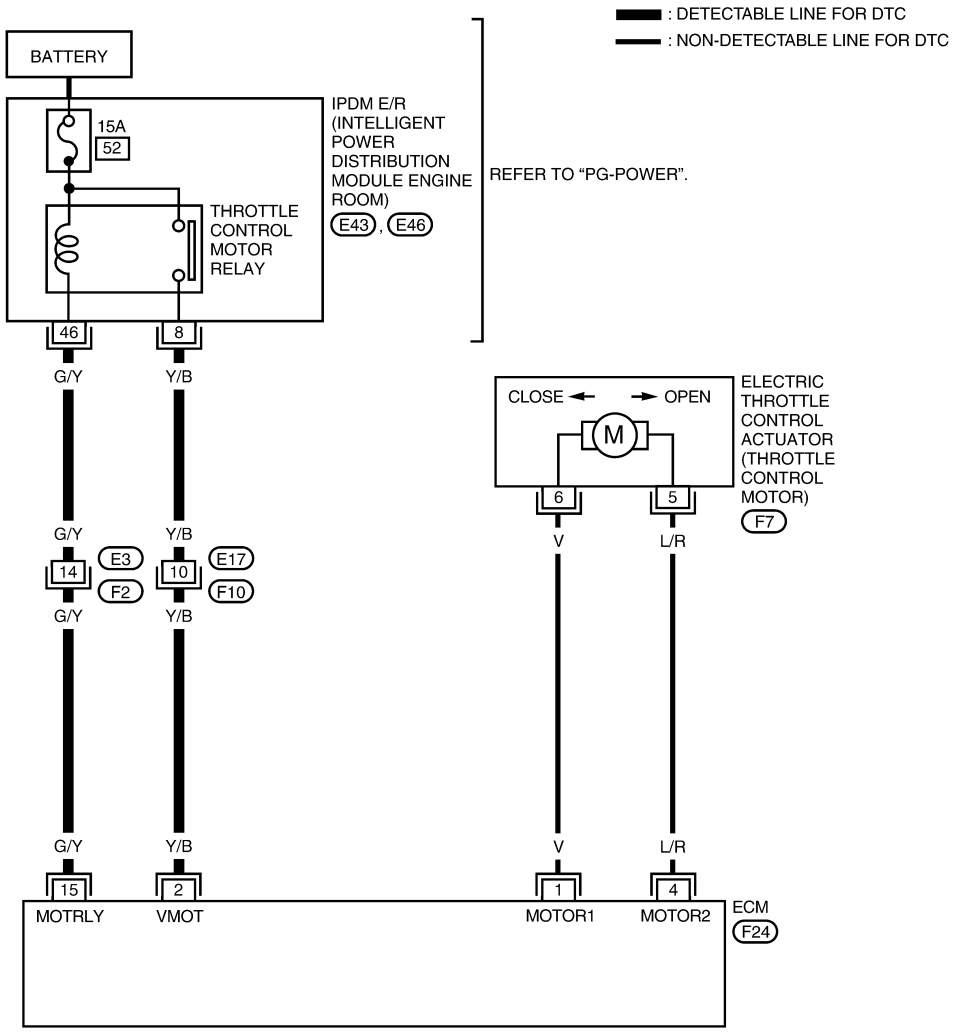

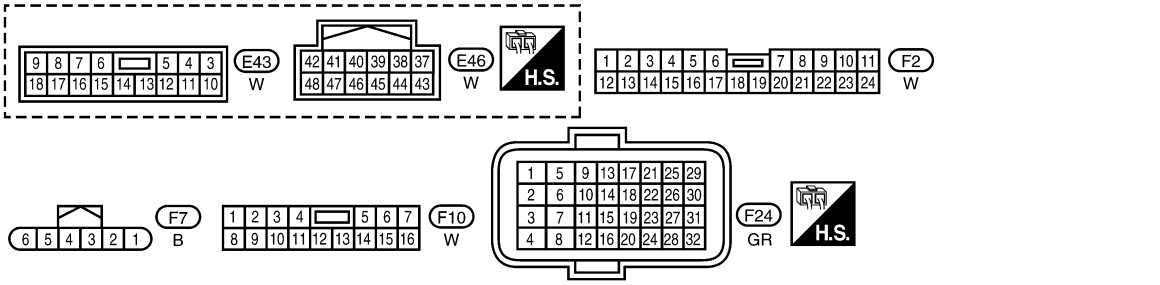

AABWA0289GB

Specification data are reference values and are measured between each terminal and ground.
Pulse signal is measured by CONSULT-III.

CAUTION:

Do not use ECM ground terminals when measuring input/output voltage. Doing so may result in damage to the ECM's transistor. Use a ground other than ECM terminals, such as the ground.

TERMINAL NO.	WIRE COLOR	ITEM	CONDITION	DATA (DC Voltage)
1	V	Throttle control motor (Open)	**[Ignition switch: ON]** • Engine stopped • Shift lever: D (CVT), 1st (M/T) • Accelerator pedal: Fully depressed	Approximately 3.2 V★ 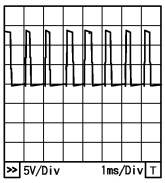 PBIA8150J
2	Y/B	Throttle control motor power supply	**[Ignition switch: ON]**	BATTERY VOLTAGE (11 - 14 V)
4	L/R	Throttle control motor (Close)	**[Ignition switch: ON]** • Engine stopped • Shift lever: D (CVT), 1st (M/T) • Accelerator pedal: Fully released	Approximately 1.8 V★ 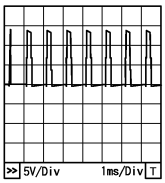 PBIA8149J
15	G/Y	Throttle control motor relay	**[Ignition switch: OFF]**	BATTERY VOLTAGE (11 - 14 V)
			[Ignition switch: ON]	0 - 1.0 V

★: Average voltage for pulse signal (Actual pulse signal can be confirmed by oscilloscope.)

Diagnosis Procedure

INFOID:0000000005285020

1. CHECK THROTTLE CONTROL MOTOR RELAY POWER SUPPLY CIRCUIT-I

1. Turn ignition switch OFF.
2. Check voltage between ECM terminal 15 and ground with CONSULT-III or tester.

Voltage : Battery voltage

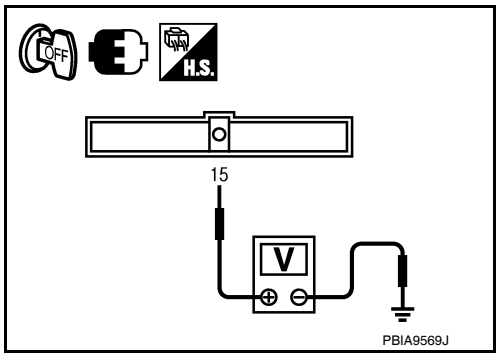

OK or NG

OK >> GO TO 5.
NG >> GO TO 2.

2. CHECK THROTTLE CONTROL MOTOR RELAY POWER SUPPLY CIRCUIT-II

1. Disconnect ECM harness connector.
2. Disconnect IPDM E/R harness connector E46.
3. Check continuity between ECM terminal 15 and IPDM E/R terminal 46. Refer to Wiring Diagram.

Continuity should exist.

4. Also check harness for short to ground and short to power.

OK or NG

OK >> GO TO 4.
NG >> GO TO 3.

3. DETECT MALFUNCTIONING PART

Check the following.
- Harness connectors E3, F2
- Harness for open or short between ECM and IPDM E/R

>> Repair open circuit or short to ground or short to power in harness or connectors.

4. CHECK FUSE

1. Disconnect 15 A fuse.
2. Check 15 A fuse for blown.

OK or NG

OK >> GO TO 8.
NG >> Replace 15 A fuse.

5. CHECK THROTTLE CONTROL MOTOR RELAY INPUT SIGNAL CIRCUIT-I

Check voltage between ECM terminal 2 and ground under the following conditions with CONSULT-III or tester.

Ignition switch	Voltage
OFF	Approximately 0 V
ON	Battery voltage (11 - 14 V)

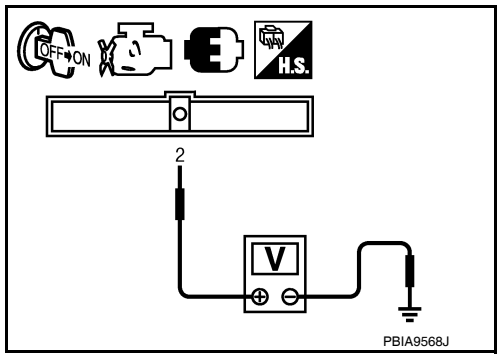

OK or NG

OK >> GO TO 8.
NG >> GO TO 6.

6. CHECK THROTTLE CONTROL MOTOR RELAY INPUT SIGNAL CIRCUIT-II

1. Turn ignition switch OFF.
2. Disconnect ECM harness connector.
3. Disconnect IPDM E/R harness connector E43.
4. Check continuity between ECM terminal 2 and IPDM E/R terminal 8.
   Refer to Wiring Diagram.

Continuity should exist.

5. Also check harness for short to ground and short to power.

OK or NG

OK >> GO TO 8.
NG >> GO TO 7.

7. DETECT MALFUNCTIONING PART

Check the following.
- Harness connectors E17, F10
- Harness for open or short between ECM and IPDM E/R

>> Repair open circuit or short to ground or short to power in harness or connectors.

8. CHECK INTERMITTENT INCIDENT

Refer to EC-152.

OK or NG

OK >> Replace IPDM E/R. Refer to PG-17.
NG >> Repair or replace harness or connectors.

DTC P2101 ELECTRIC THROTTLE CONTROL FUNCTION

Description

INFOID:0000000005285021

NOTE:
If DTC P2101 is displayed with DTC P2100 or P2119, first perform the trouble diagnosis for DTC P2100 or P2119. Refer to EC-491or EC-505.
Electric throttle control actuator consists of throttle control motor, throttle position sensor, etc.
The throttle control motor is operated by the ECM and it opens and closes the throttle valve.
The current opening angle of the throttle valve is detected by the throttle position sensor and it provides feedback to the ECM to control the throttle control motor to make the throttle valve opening angle properly in response to driving condition.

On Board Diagnosis Logic

INFOID:0000000005285022

This self-diagnosis has the one trip detection logic.

DTC No.	Trouble diagnosis name	DTC detecting condition	Possible cause
P2101 2101	Electric throttle control performance	Electric throttle control function does not operate properly.	• Harness or connectors (Throttle control motor circuit is open or shorted) • Electric throttle control actuator

FAIL-SAFE MODE

When the malfunction is detected, the ECM enters fail-safe mode and the MIL lights up.

Engine operating condition in fail-safe mode
ECM stops the electric throttle control actuator control, throttle valve is maintained at a fixed opening (approx. 5 degrees) by the return spring.

DTC Confirmation Procedure

INFOID:0000000005285023

NOTE:
If DTC Confirmation Procedure has been previously conducted, always turn ignition switch OFF and wait at least 10 seconds before conducting the next test.
TESTING CONDITION:
Before performing the following procedure, confirm that battery voltage is more than 11 V when engine is running.

1. Turn ignition switch ON and wait at least 2 seconds.
2. Start engine and let it idle for 5 seconds.
3. Check DTC.
4. If DTC is detected, go to EC-497, "Diagnosis Procedure".

Wiring Diagram

INFOID:0000000005285024

EC-ETC1-01

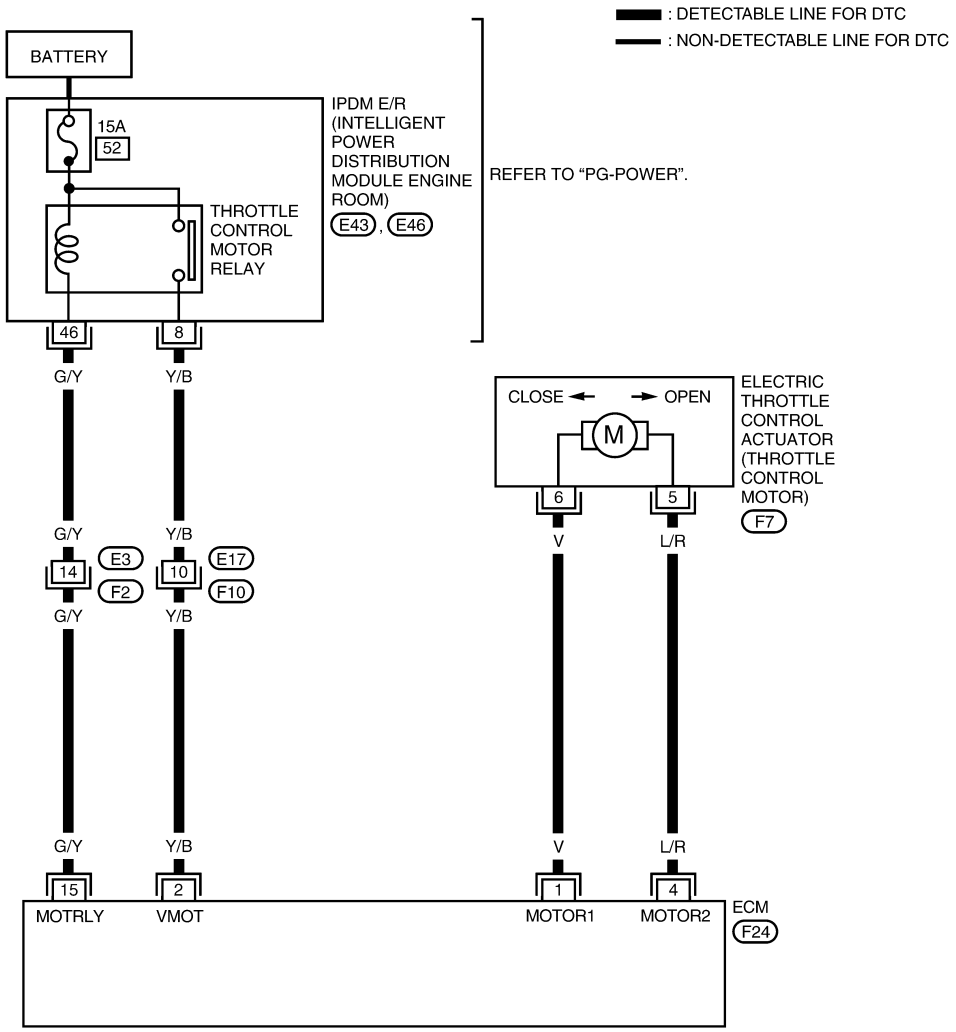

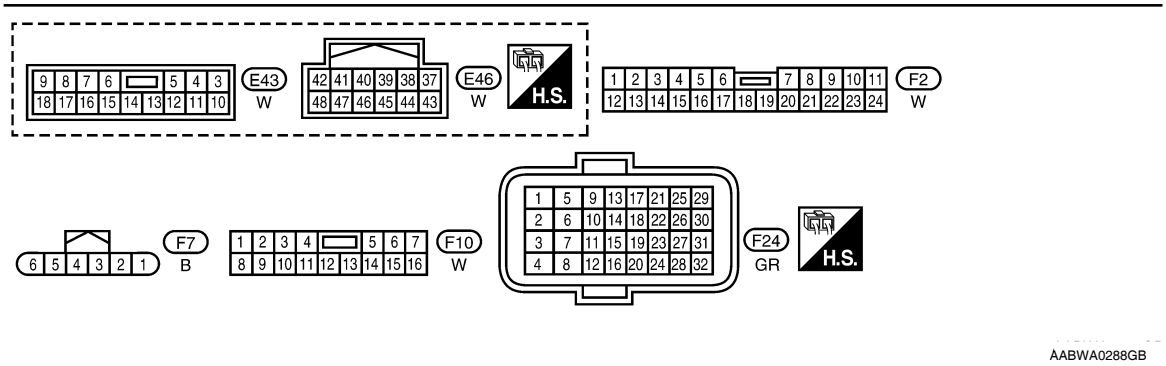

Specification data are reference values and are measured between each terminal and ground.
Pulse signal is measured by CONSULT-III.

CAUTION:

Do not use ECM ground terminals when measuring input/output voltage. Doing so may result in damage to the ECM's transistor. Use a ground other than ECM terminals, such as the ground.

TERMINAL NO.	WIRE COLOR	ITEM	CONDITION	DATA (DC Voltage)
1	V	Throttle control motor (Open)	**[Ignition switch: ON]** • Engine stopped • Shift lever: D (CVT), 1st (M/T) • Accelerator pedal: Fully depressed	Approximately 3.2 V★ 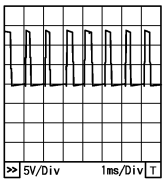 PBIA8150J
2	Y/B	Throttle control motor power supply	**[Ignition switch: ON]**	BATTERY VOLTAGE (11 - 14 V)
4	L/R	Throttle control motor (Close)	**[Ignition switch: ON]** • Engine stopped • Shift lever: D (CVT), 1st (M/T) • Accelerator pedal: Fully released	Approximately 1.8 V★ 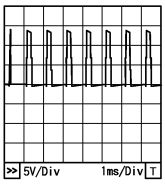 PBIA8149J
15	G/Y	Throttle control motor relay	**[Ignition switch: OFF]**	BATTERY VOLTAGE (11 - 14 V)
			[Ignition switch: ON]	0 - 1.0 V

★: Average voltage for pulse signal (Actual pulse signal can be confirmed by oscilloscope.)

Diagnosis Procedure

INFOID:0000000005285025

1. CHECK GROUND CONNECTIONS

1. Turn ignition switch OFF.
2. Loosen and retighten ground screws on the body. Refer to EC-157, "Ground Inspection".

- ⇦ : Vehicle front
- Body ground (1)

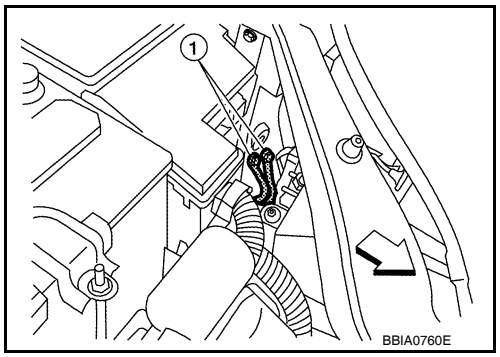

OK or NG

OK >> GO TO 2.
NG >> Repair or replace ground connections.

2. CHECK THROTTLE CONTROL MOTOR RELAY INPUT SIGNAL CIRCUIT-I

Check voltage between ECM terminal 2 and ground under the following conditions with CONSULT-III or tester.

Ignition switch	Voltage
OFF	Approximately 0 V
ON	Battery voltage (11 - 14 V)

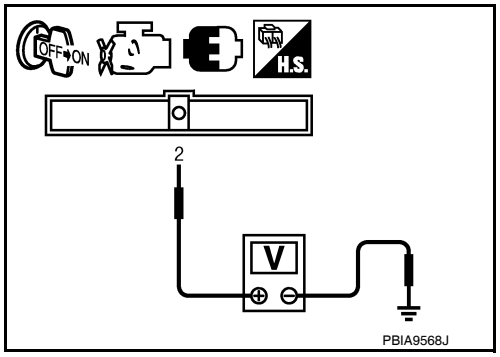

OK or NG

OK >> GO TO 10.
NG >> GO TO 3.

3. CHECK THROTTLE CONTROL MOTOR RELAY INPUT SIGNAL CIRCUIT-II

1. Turn ignition switch OFF.
2. Disconnect ECM harness connector.
3. Disconnect IPDM E/R harness connector E43.
4. Check continuity between ECM terminal 2 and IPDM E/R terminal 8.
   Refer to Wiring Diagram.

Continuity should exist.

5. Also check harness for short to ground and short to power.

OK or NG

OK >> GO TO 5.
NG >> GO TO 4.

4. DETECT MALFUNCTIONING PART

Check the following.
- Harness connectors E17, F10
- Harness for open or short between ECM and IPDM E/R

>> Repair open circuit or short to ground or short to power in harness or connectors.

5. CHECK THROTTLE CONTROL MOTOR RELAY POWER SUPPLY CIRCUIT-I

1. Reconnect all harness connectors disconnected.
2. Check voltage between ECM terminal 15 and ground with CONSULT-III or tester.

Voltage : Battery voltage

OK or NG

OK >> GO TO 9.
NG >> GO TO 6.

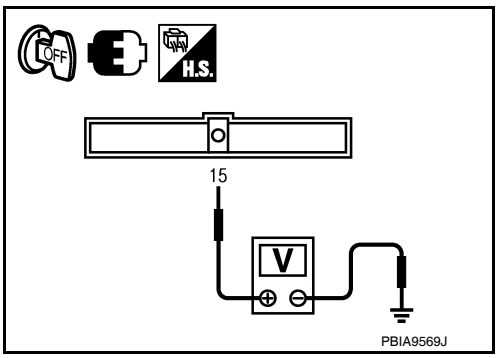

6. CHECK THROTTLE CONTROL MOTOR RELAY POWER SUPPLY CIRCUIT-II

1. Disconnect ECM harness connector.
2. Disconnect IPDM E/R harness connector E46.
3. Check harness continuity between ECM terminal 15 and IPDM E/R terminal 46.
   Refer to Wiring Diagram.

Continuity should exist.

4. Also check harness for short to ground and short to power.

OK or NG

OK >> GO TO 8.
NG >> GO TO 7.

7. DETECT MALFUNCTIONING PART

Check the following.
- Harness connectors E3, F2
- Harness for open or short between ECM and IPDM E/R

>> Repair open circuit or short to ground or short to power in harness or connectors.

8. CHECK FUSE

1. Disconnect 15 A fuse.
2. Check 15 A fuse for blown.

OK or NG

OK >> GO TO 9.
NG >> Replace 15A fuse.

9. CHECK INTERMITTENT INCIDENT

Refer to EC-152.

OK or NG

OK >> Replace IPDM E/R. Refer to PG-17.
NG >> Repair or replace harness or connectors.

10. CHECK THROTTLE CONTROL MOTOR OUTPUT SIGNAL CIRCUIT FOR OPEN OR SHORT

1. Turn ignition switch OFF.
2. Disconnect electric throttle control actuator (1) harness connector.
3. Disconnect ECM harness connector.
4. Check harness continuity between the following terminals. Refer to Wiring Diagram.

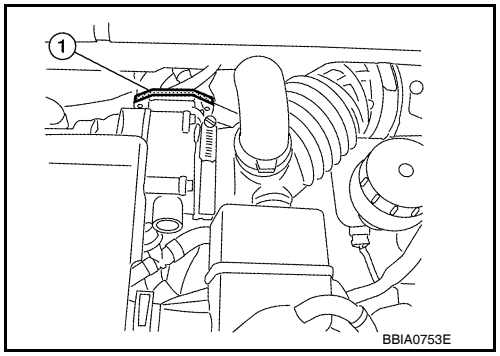

Electric throttle control actuator terminal	ECM terminal	Continuity
5	1	Should not exist.
	4	Should exist.
6	1	Should exist.
	4	Should not exist.

5. Also check harness for short to ground and short to power.

OK or NG

OK >> GO TO 11.
NG >> Repair or replace.

11. CHECK ELECTRIC THROTTLE CONTROL ACTUATOR VISUALLY

1. Remove the intake air duct.
2. Check if foreign matter is caught between the throttle valve (1) and the housing.

- ⇦ : Vehicle front
- Illustration shows the view with intake air duct removed.

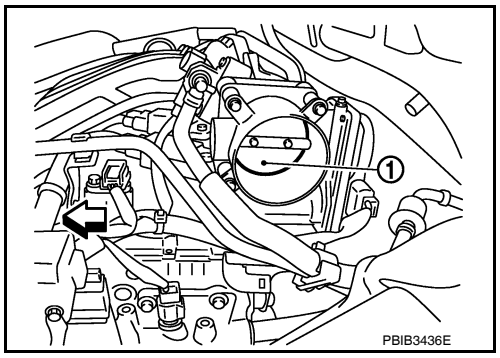

OK or NG

OK >> GO TO 12.
NG >> Remove the foreign matter and clean the electric throttle control actuator inside.

12. CHECK THROTTLE CONTROL MOTOR

Refer to EC-500, "Component Inspection".

OK or NG

OK >> GO TO 13.
NG >> GO TO 14.

13. CHECK INTERMITTENT INCIDENT

Refer to EC-152.

OK or NG

OK >> GO TO 14.
NG >> Repair or replace harness or connectors.

14. REPLACE ELECTRIC THROTTLE CONTROL ACTUATOR

1. Replace the electric throttle control actuator.
2. Perform EC-99, "Throttle Valve Closed Position Learning".
3. Perform EC-99, "Idle Air Volume Learning".

>> **INSPECTION END**

Component Inspection

INFOID:0000000005285026

THROTTLE CONTROL MOTOR

1. Disconnect electric throttle control actuator harness connector.
2. Check resistance between terminals 5 and 6.

Resistance: Approximately 1 - 15 Ω [at 25 °C (77°F)]

3. If NG, replace electric throttle control actuator and go to next step.
4. Perform EC-99, "Throttle Valve Closed Position Learning".
5. Perform EC-99, "Idle Air Volume Learning".

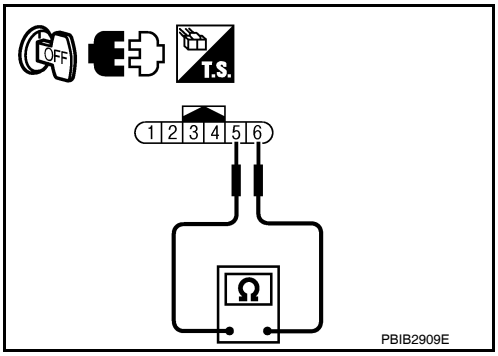

Removal and Installation

INFOID:0000000005285027

ELECTRIC THROTTLE CONTROL ACTUATOR

Refer to EM-18.

DTC P2118 THROTTLE CONTROL MOTOR

Component Description

INFOID:0000000005285028

The throttle control motor is operated by the ECM and it opens and closes the throttle valve.
The current opening angle of the throttle valve is detected by the throttle position sensor and it provides feedback to the ECM to control the throttle control motor to make the throttle valve opening angle properly in response to driving condition.

On Board Diagnosis Logic

INFOID:0000000005285029

This self-diagnosis has the one trip detection logic.

DTC No.	Trouble diagnosis name	DTC detecting condition	Possible cause
P2118 2118	Throttle control motor circuit short	ECM detects short in both circuits between ECM and throttle control motor.	• Harness or connectors (Throttle control motor circuit is shorted.) • Electric throttle control actuator (Throttle control motor)

FAIL-SAFE MODE
When the malfunction is detected, ECM enters fail-safe mode and the MIL lights up.

Engine operating condition in fail-safe mode
ECM stops the electric throttle control actuator control, throttle valve is maintained at a fixed opening (approx. 5 degrees) by the return spring.

DTC Confirmation Procedure

INFOID:0000000005285030

NOTE:
If DTC Confirmation Procedure has been previously conducted, always turn ignition switch OFF and wait at least 10 seconds before conducting the next test.

1. Turn ignition switch ON and wait at least 2 seconds.
2. Start engine and let it idle for 5 seconds.
3. Check DTC.
4. If DTC is detected, go to EC-503, "Diagnosis Procedure".

Wiring Diagram

INFOID:0000000005285031

EC-ETC3-01

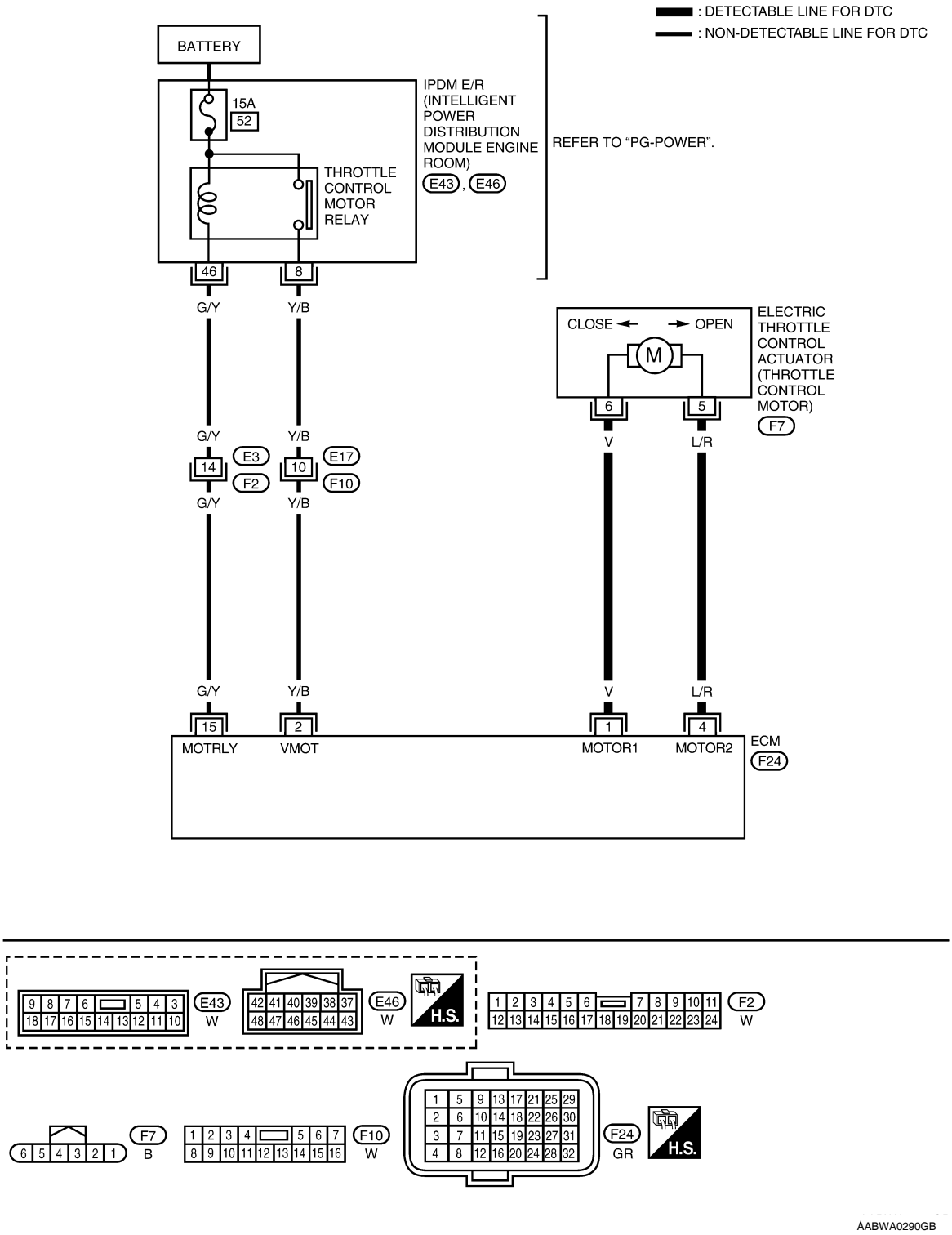

Specification data are reference values and are measured between each terminal and ground.
Pulse signal is measured by CONSULT-III.

CAUTION:

Do not use ECM ground terminals when measuring input/output voltage. Doing so may result in damage to the ECM's transistor. Use a ground other than ECM terminals, such as the ground.

TERMINAL NO.	WIRE COLOR	ITEM	CONDITION	DATA (DC Voltage)
1	V	Throttle control motor (Open)	**[Ignition switch: ON]** • Engine stopped • Shift lever: D (CVT), 1st (M/T) • Accelerator pedal: Fully depressed	Approximately 3.2 V★ 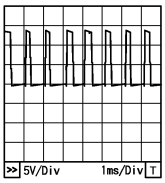 PBIA8150J
2	Y/B	Throttle control motor power supply	**[Ignition switch: ON]**	BATTERY VOLTAGE (11 - 14 V)
4	L/R	Throttle control motor (Close)	**[Ignition switch: ON]** • Engine stopped • Shift lever: D (CVT), 1st (M/T) • Accelerator pedal: Fully released	Approximately 1.8 V★ 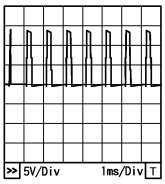 PBIA8149J
15	G/Y	Throttle control motor relay	**[Ignition switch: OFF]**	BATTERY VOLTAGE (11 - 14 V)
			[Ignition switch: ON]	0 - 1.0 V

★: Average voltage for pulse signal (Actual pulse signal can be confirmed by oscilloscope.)

Diagnosis Procedure

INFOID:0000000005285032

1. CHECK GROUND CONNECTIONS

1. Turn ignition switch OFF.
2. Loosen and retighten engine screws on the body. Refer to EC-157, "Ground Inspection".

- ⇦ : Vehicle front
- Body ground (1)

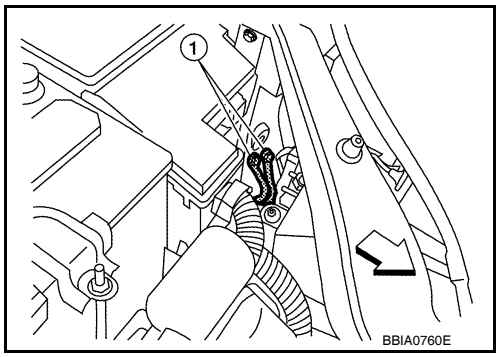

OK or NG

OK >> GO TO 2.
NG >> Repair or replace ground connections.

2. CHECK THROTTLE CONTROL MOTOR OUTPUT SIGNAL CIRCUIT FOR OPEN OR SHORT

1. Disconnect electric throttle control actuator (1) harness connector.
2. Disconnect ECM harness connector.
3. Check harness continuity between the following terminals. Refer to Wiring Diagram.

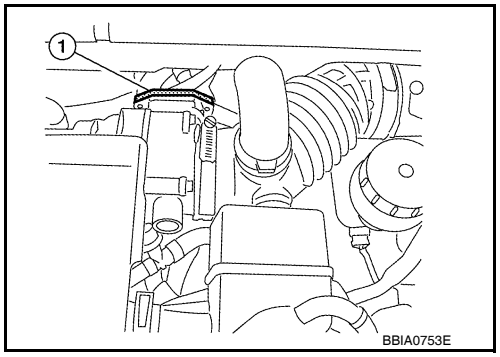

Electric throttle control actuator terminal	ECM terminal	Continuity
5	1	Should not exist.
	4	Should exist.

Electric throttle control actuator terminal	ECM terminal	Continuity
6	1	Should exist.
	4	Should not exist.

4. Also check harness for short to ground and short to power.

OK or NG

OK >> GO TO 3.
NG >> Repair open circuit or short to ground or short to power in harness or connectors.

3. CHECK THROTTLE CONTROL MOTOR

Refer to EC-504, "Component Inspection".

OK or NG

OK >> GO TO 4.
NG >> GO TO 5.

4. CHECK INTERMITTENT INCIDENT

Refer to EC-152.

OK or NG

OK >> GO TO 5.
NG >> Repair or replace harness or connectors.

5. REPLACE ELECTRIC THROTTLE CONTROL ACTUATOR

1. Replace the electric throttle control actuator.
2. Perform EC-99, "Throttle Valve Closed Position Learning".
3. Perform EC-99, "Idle Air Volume Learning".

>> **INSPECTION END**

Component Inspection

INFOID:0000000005285033

THROTTLE CONTROL MOTOR

1. Disconnect electric throttle control actuator harness connector.
2. Check resistance between terminals 5 and 6.

Resistance: Approximately 1 - 15 Ω [at 25 °C (77°F)]

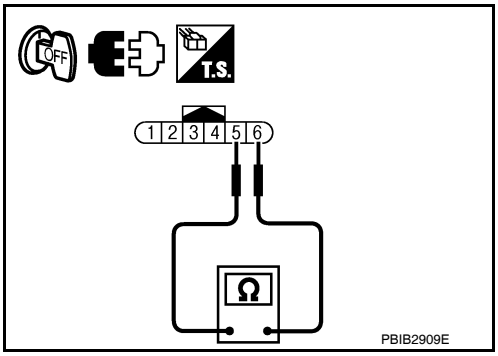

3. If NG, replace electric throttle control actuator and go to next step.
4. Perform EC-99, "Throttle Valve Closed Position Learning".
5. Perform EC-99, "Idle Air Volume Learning".

Removal and Installation

INFOID:0000000005285034

ELECTRIC THROTTLE CONTROL ACTUATOR

Refer to EM-18.

DTC P2119 ELECTRIC THROTTLE CONTROL ACTUATOR

Component Description

INFOID:0000000005285035

Electric throttle control actuator consists of throttle control motor, throttle position sensor, etc.
The throttle control motor is operated by the ECM and it opens and closes the throttle valve.
The throttle position sensor detects the throttle valve position, and the opening and closing speed of the throttle valve and feeds the voltage signals to the ECM. The ECM judges the current opening angle of the throttle valve from these signals and the ECM controls the throttle control motor to make the throttle valve opening angle properly in response to driving condition.

On Board Diagnosis Logic

INFOID:0000000005285036

This self-diagnosis has the one trip detection logic.

DTC No.	Trouble diagnosis name	DTC detecting condition		Possible cause
P2119 2119	Electric throttle control actuator	A)	Electric throttle control actuator does not function properly due to the return spring malfunction.	• Electric throttle control actuator
		B)	Throttle valve opening angle in fail-safe mode is not in specified range.	
		C)	ECM detects the throttle valve is stuck open.	

FAIL-SAFE MODE

When the malfunction is detected, ECM enters fail-safe mode and the MIL lights up.

Detected items	Engine operating condition in fail-safe mode
Malfunction A	ECM controls the electric throttle actuator by regulating the throttle opening around the idle position. The engine speed will not rise more than 2,000 rpm.
Malfunction B	ECM controls the electric throttle control actuator by regulating the throttle opening to 20 degrees or less.
Malfunction C	While the vehicle is driving, it slows down gradually by fuel cut. After the vehicle stops, the engine stalls. The engine can restart in N or P position (CVT), neutral (M/T), and engine speed will not exceed 1,000 rpm or more.

DTC Confirmation Procedure

INFOID:0000000005285037

NOTE:
- **Perform PROCEDURE FOR MALFUNCTION A AND B first. If the DTC cannot be confirmed, perform PROCEDURE FOR MALFUNCTION C.**
- If DTC Confirmation Procedure has been previously conducted, always turn ignition switch OFF and wait at least 10 seconds before conducting the next test.

PROCEDURE FOR MALFUNCTION A AND B

1. Turn ignition switch ON and wait at least 1 second.
2. Set shift lever to D position (CVT) or 1st position (M/T), and wait at least 3 seconds.
3. Set shift lever to P position (CVT) or Neutral position (M/T).
4. Turn ignition switch OFF and wait at least 10 seconds.
5. Turn ignition switch ON and wait at least 1 second.
6. Set shift lever to D position (CVT) or 1st position (M/T), and wait at least 3 seconds.
7. Set shift lever to P position (CVT) or Neutral position (M/T).
8. Turn ignition switch OFF, wait at least 10 seconds, and then turn ON.
9. Check DTC.
10. If DTC is detected, go to EC-506, "Diagnosis Procedure".

PROCEDURE FOR MALFUNCTION C

1. Turn ignition switch ON and wait at least 1 second.
2. Set shift lever to D position (CVT) or 1st position (M/T) and wait at least 3 seconds.

3. Set shift lever to N, P position (CVT) or Neutral (M/T) position.
4. Start engine and let it idle for 3 seconds.
5. Check DTC.
6. If DTC is detected, go to EC-506, "Diagnosis Procedure".

Diagnosis Procedure

INFOID:0000000005285038

1. CHECK ELECTRIC THROTTLE CONTROL ACTUATOR VISUALLY

1. Remove the intake air duct.
2. Check if a foreign matter is caught between the throttle valve (1) and the housing.

- ⇦ : Vehicle front
- This illumination is shows the view with intake air duct removed.

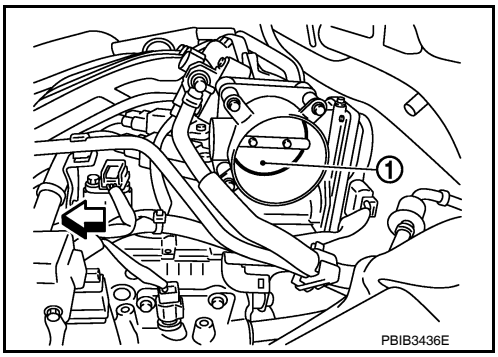

OK or NG

OK >> GO TO 2.
NG >> Remove the foreign matter and clean the electric throttle control actuator inside.

2. REPLACE ELECTRIC THROTTLE CONTROL ACTUATOR

1. Replace the electric throttle control actuator.
2. Perform EC-99, "Throttle Valve Closed Position Learning".
3. Perform EC-99, "Idle Air Volume Learning".

>> **INSPECTION END**

DTC P2122, P2123 APP SENSOR

Component Description

INFOID:0000000005285039

The accelerator pedal position sensor is installed on the upper end of the accelerator pedal assembly. The sensor detects the accelerator position and sends a signal to the ECM.
Accelerator pedal position sensor has two sensors. These sensors are a kind of potentiometers which transform the accelerator pedal position into output voltage, and emit the voltage signal to the ECM. In addition, these sensors detect the opening and closing speed of the accelerator pedal and feed the voltage signals to the ECM. The ECM judges the current opening angle of the accelerator pedal from these signals and controls the throttle control motor based on these signals.

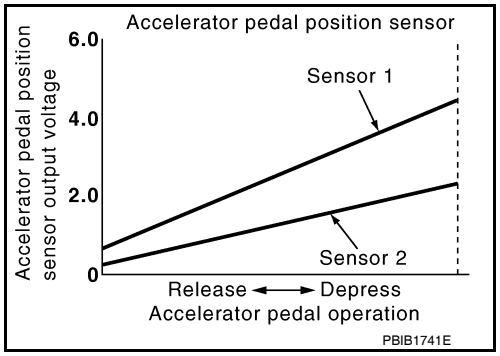

Idle position of the accelerator pedal is determined by the ECM receiving the signal from the accelerator pedal position sensor. The ECM uses this signal for the engine operation such as fuel cut.

CONSULT-III Reference Value in Data Monitor Mode

INFOID:0000000005285040

Specification data are reference values.

Monitor item	Condition		Specification
ACCEL SEN 1	• Ignition switch: ON (Engine stopped)	Accelerator pedal: Fully released	0.6 - 0.9 V
		Accelerator pedal: Fully depressed	4.0 - 4.8 V
ACCEL SEN 2*	• Ignition switch: ON (Engine stopped)	Accelerator pedal: Fully released	0.6 - 0.9 V
		Accelerator pedal: Fully depressed	3.9 - 4.8 V
CLSD THL POS	• Ignition switch: ON (Engine stopped)	Accelerator pedal: Fully released	ON
		Accelerator pedal: Slightly depressed	OFF

*: Accelerator pedal position sensor 2 signal is converted by ECM internally. Thus, it differs from ECM terminal voltage.

On Board Diagnosis Logic

INFOID:0000000005285041

These self-diagnoses have the one trip detection logic.
NOTE:
If DTC P2122 or P2123 is displayed with DTC P0643, first perform the trouble diagnosis for DTC P0643. Refer to EC-424.

DTC No.	Trouble diagnosis name	DTC detecting condition	Possible cause
P2122 2122	Accelerator pedal position sensor 1 circuit low input	An excessively low voltage from the APP sensor 1 is sent to ECM.	• Harness or connectors (APP sensor 1 circuit is open or shorted.) • Accelerator pedal position sensor (APP sensor 1)
P2123 2123	Accelerator pedal position sensor 1 circuit high input	An excessively high voltage from the APP sensor 1 is sent to ECM.	

FAIL-SAFE MODE

When the malfunction is detected, ECM enters fail-safe mode and the MIL lights up.

Engine operating condition in fail-safe mode
The ECM controls the electric throttle control actuator in regulating the throttle opening in order for the idle position to be within +10 degrees. The ECM regulates the opening speed of the throttle valve to be slower than the normal condition. So, the acceleration will be poor.

DTC Confirmation Procedure

INFOID:0000000005285042

NOTE:

If DTC Confirmation Procedure has been previously conducted, always turn ignition switch OFF and wait at least 10 seconds before conducting the next test.

TESTING CONDITION:

Before performing the following procedure, confirm that battery voltage is more than 8 V at idle.

1. Start engine and let it idle for 1 second.
2. Check DTC.
3. If DTC is detected, go to EC-509, "Diagnosis Procedure".

Wiring Diagram

INFOID:0000000005285043

EC-APPS1-01

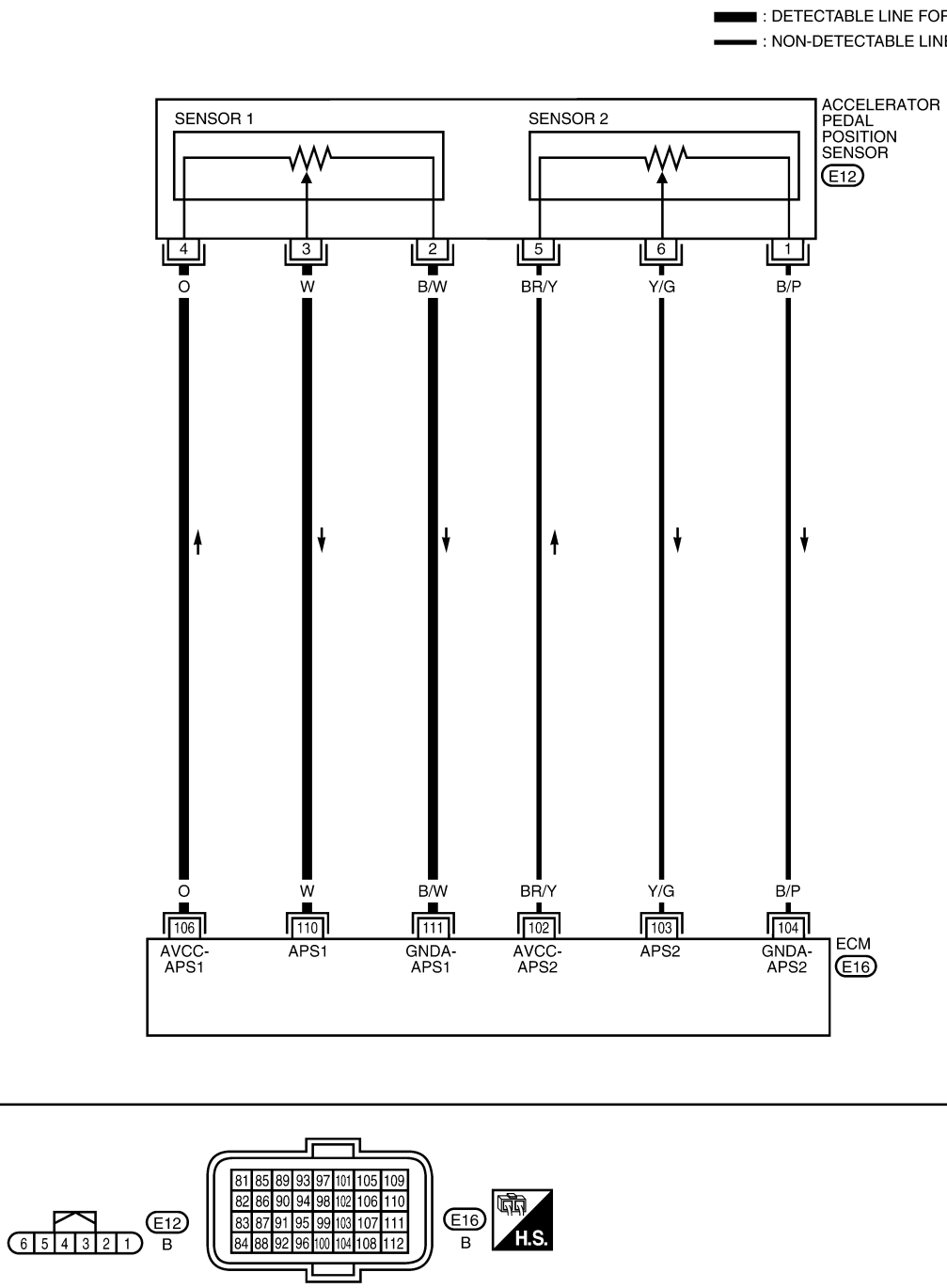

BBWA2900E

Specification data are reference values and are measured between each terminal and ground.

CAUTION:

Do not use ECM ground terminals when measuring input/output voltage. Doing so may result in damage to the ECM's transistor. Use a ground other than ECM terminals, such as the ground.

TERMINAL NO.	WIRE COLOR	ITEM	CONDITION	DATA (DC Voltage)
102	BR/Y	Sensor power supply (APP sensor 2)	**[Ignition switch: ON]**	Approximately 5 V
103	Y/G	Accelerator pedal position sensor 2	**[Ignition switch: ON]** • Engine stopped • Accelerator pedal: Fully released	0.3 - 0.6 V
			[Ignition switch: ON] • Engine stopped • Accelerator pedal: Fully depressed	1.95 - 2.4 V
104	B/P	Sensor ground (APP sensor 2)	**[Engine is running]** • **Warm-up condition** • Idle speed	Approximately 0 V
106	O	Sensor power supply (APP sensor 1)	**[Ignition switch: ON]**	Approximately 5 V
110	W	Accelerator pedal position sensor 1	**[Ignition switch: ON]** • Engine stopped • Accelerator pedal: Fully released	0.6 - 0.9 V
			[Ignition switch: ON] • Engine stopped • Accelerator pedal: Fully depressed	3.9 - 4.7 V
111	B/W	Sensor ground (APP sensor 1)	**[Engine is running]** • **Warm-up condition** • Idle speed	Approximately 0 V

Diagnosis Procedure

INFOID:0000000005285044

1. CHECK GROUND CONNECTIONS

1. Turn ignition switch OFF.
2. Loosen and retighten ground screws on the body.
   Refer to EC-157, "Ground Inspection".

- ⇦ : Vehicle front
- Body ground (1)

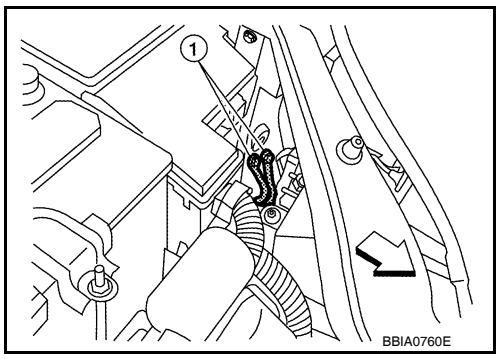

OK or NG

OK >> GO TO 2.
NG >> Repair or replace ground connections.

2. CHECK APP SENSOR 1 POWER SUPPLY CIRCUIT

1. Disconnect accelerator pedal position (APP) sensor (1) harness connector.
2. Turn ignition switch ON.

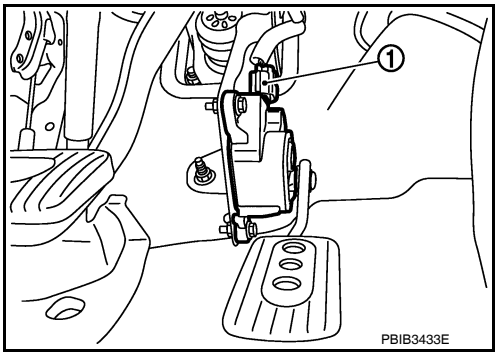

3. Check voltage between APP sensor terminal 4 and ground with CONSULT-III or tester.

Voltage : Approximately 5 V

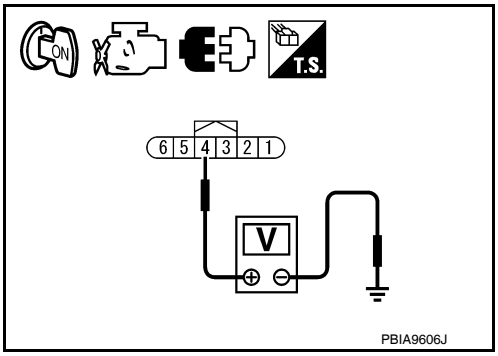

OK or NG

OK >> GO TO 3.
NG >> Repair open circuit or short to ground or short to power in harness or connectors.

3. CHECK APP SENSOR 1 GROUND CIRCUIT FOR OPEN AND SHORT

1. Turn ignition switch OFF.
2. Disconnect ECM harness connector.
3. Check harness continuity between ECM terminal 111 and APP sensor terminal 2. Refer to Wiring Diagram.

Continuity should exist.

4. Also check harness for short to ground and short to power.

OK or NG

OK >> GO TO 4.
NG >> Repair open circuit or short to ground or short to power in harness or connectors.

4. CHECK APP SENSOR 1 INPUT SIGNAL CIRCUIT FOR OPEN AND SHORT

1. Check harness continuity between ECM terminal 110 and APP sensor terminal 3. Refer to Wiring Diagram.

Continuity should exist.

2. Also check harness for short to ground and short to power.

OK or NG

OK >> GO TO 5.
NG >> Repair open circuit or short to ground or short to power in harness or connectors.

5. CHECK APP SENSOR

Refer to EC-511, "Component Inspection".

OK or NG

OK >> GO TO 7.
NG >> GO TO 6.

6. REPLACE ACCELERATOR PEDAL ASSEMBLY

1. Replace accelerator pedal assembly.
2. Perform EC-99, "Accelerator Pedal Released Position Learning".
3. Perform EC-99, "Throttle Valve Closed Position Learning".
4. Perform EC-99, "Idle Air Volume Learning".

>> **INSPECTION END**

7. CHECK INTERMITTENT INCIDENT

Refer to EC-152.

>> **INSPECTION END**

Component Inspection

INFOID:0000000005285045

ACCELERATOR PEDAL POSITION SENSOR

1. Reconnect all harness connectors disconnected.
2. Turn ignition switch ON.
3. Check voltage between ECM terminals 110 (APP sensor 1 signal), 103 (APP sensor 2 signal) and ground under the following conditions.

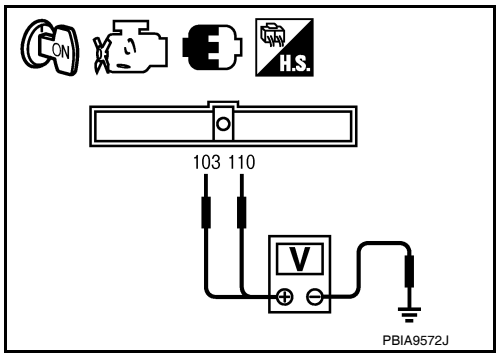

Terminal	Accelerator pedal	Voltage
110 (Accelerator pedal position sensor 1)	Fully released	0.6 - 0.9 V
	Fully depressed	3.9 - 4.7 V
103 (Accelerator pedal position sensor 2)	Fully released	0.3 - 0.6 V
	Fully depressed	1.95 - 2.4 V

4. If NG, replace accelerator pedal assembly and go to next step.
5. Perform EC-99, "Accelerator Pedal Released Position Learning".
6. Perform EC-99, "Throttle Valve Closed Position Learning".
7. Perform EC-99, "Idle Air Volume Learning".

Removal and Installation

INFOID:0000000005285046

ACCELERATOR PEDAL

Refer to ACC-4.

DTC P2127, P2128 APP SENSOR

Component Description

INFOID:0000000005285047

The accelerator pedal position sensor is installed on the upper end of the accelerator pedal assembly. The sensor detects the accelerator position and sends a signal to the ECM.
Accelerator pedal position sensor has two sensors. These sensors are a kind of potentiometers which transform the accelerator pedal position into output voltage, and emit the voltage signal to the ECM. In addition, these sensors detect the opening and closing speed of the accelerator pedal and feed the voltage signals to the ECM. The ECM judges the current opening angle of the accelerator pedal from these signals and controls the throttle control motor based on these signals.

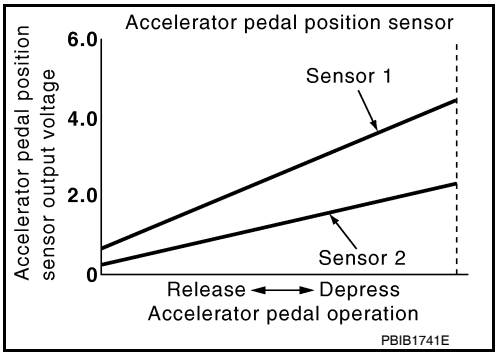

Idle position of the accelerator pedal is determined by the ECM receiving the signal from the accelerator pedal position sensor. The ECM uses this signal for the engine operation such as fuel cut.

CONSULT-III Reference Value in Data Monitor Mode

INFOID:0000000005285048

Specification data are reference values.

Monitor item	Condition		Specification
ACCEL SEN 1	• Ignition switch: ON (Engine stopped)	Accelerator pedal: Fully released	0.6 - 0.9 V
		Accelerator pedal: Fully depressed	4.0 - 4.8 V
ACCEL SEN 2*	• Ignition switch: ON (Engine stopped)	Accelerator pedal: Fully released	0.6 - 0.9 V
		Accelerator pedal: Fully depressed	3.9 - 4.8 V
CLSD THL POS	• Ignition switch: ON (Engine stopped)	Accelerator pedal: Fully released	ON
		Accelerator pedal: Slightly depressed	OFF

*: Accelerator pedal position sensor 2 signal is converted by ECM internally. Thus, it differs from ECM terminal voltage.

On Board Diagnosis Logic

INFOID:0000000005285049

These self-diagnoses have the one trip detection logic.

DTC No.	Trouble diagnosis name	DTC detecting condition	Possible cause
P2127 2127	Accelerator pedal position sensor 2 circuit low input	An excessively low voltage from the APP sensor 2 is sent to ECM.	• Harness or connectors (APP sensor 2 circuit is open or shorted.) [Crankshaft position sensor (POS) circuit is shorted.] (Refrigerant pressure sensor circuit is shorted.) (EVAP control system pressure sensor circuit is shorted.) (Tumble control valve position sensor circuit is shorted.) • Accelerator pedal position sensor (APP sensor 2) • Crankshaft position sensor (POS) • Refrigerant pressure sensor • EVAP control system pressure sensor • Tumble control valve position sensor
P2128 2128	Accelerator pedal position sensor 2 circuit high input	An excessively high voltage from the APP sensor 2 is sent to ECM.	

FAIL-SAFE MODE

When the malfunction is detected, ECM enters fail-safe mode and the MIL lights up.

Engine operating condition in fail-safe mode
The ECM controls the electric throttle control actuator in regulating the throttle opening in order for the idle position to be within +10 degrees. The ECM regulates the opening speed of the throttle valve to be slower than the normal condition. So, the acceleration will be poor.

DTC Confirmation Procedure

INFOID:0000000005285050

NOTE:
If DTC Confirmation Procedure has been previously conducted, always turn ignition switch OFF and wait at least 10 seconds before conducting the next test.
TESTING CONDITION:
Before performing the following procedure, confirm that battery voltage is more than 8 V at idle.

1. Start engine and let it idle for 1 second.
2. Check DTC.
3. If DTC is detected, go to EC-515, "Diagnosis Procedure".

Wiring Diagram

INFOID:0000000005285051

EC-APPS2-01

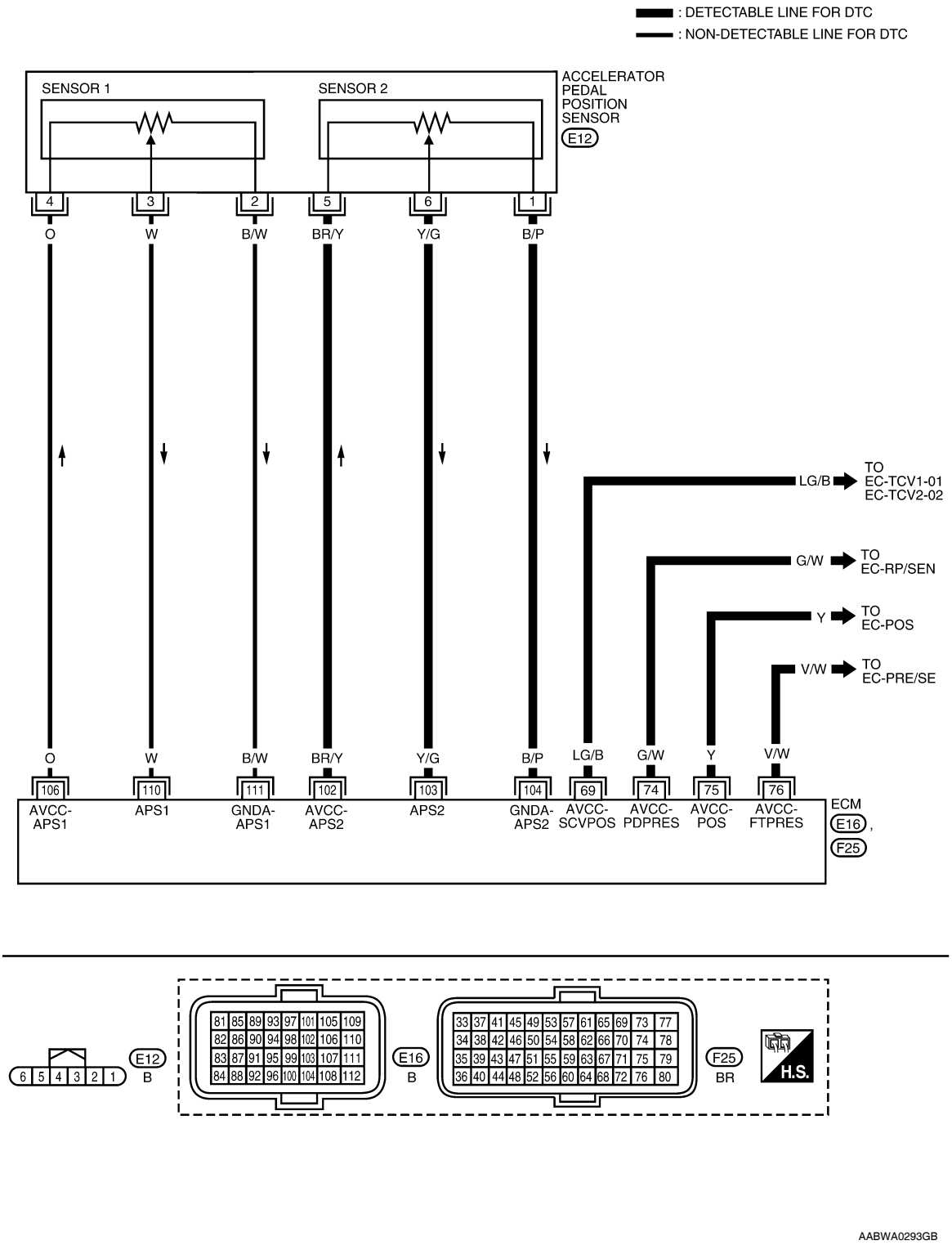

Specification data are reference values and are measured between each terminal and ground.

CAUTION:

Do not use ECM ground terminals when measuring input/output voltage. Doing so may result in damage to the ECM's transistor. Use a ground other than ECM terminals, such as the ground.

TERMINAL NO.	WIRE COLOR	ITEM	CONDITION	DATA (DC Voltage)
69	LG/B	Sensor power supply (Tumble control valve position sensor)	**[Ignition switch: ON]**	Approximately 5 V
74	G/W	Sensor power supply (Refrigerant pressure sensor)	**[Ignition switch: ON]**	Approximately 5 V
75	Y	Sensor power supply [Crankshaft position sensor (POS)]	**[Ignition switch: ON]**	Approximately 5 V
76	V/W	EVAP control system pressure sensor power supply	**[Ignition switch: ON]**	Approximately 5 V
102	BR/Y	Sensor power supply (APP sensor 2)	**[Ignition switch: ON]**	Approximately 5 V
103	Y/G	Accelerator pedal position sensor 2	**[Ignition switch: ON]** • Engine stopped • Accelerator pedal: Fully released	0.3 - 0.6 V
			[Ignition switch: ON] • Engine stopped • Accelerator pedal: Fully depressed	1.95 - 2.4 V
104	B/P	Sensor ground (APP sensor 2)	**[Engine is running]** • **Warm-up condition** • Idle speed	Approximately 0 V
106	O	Sensor power supply (APP sensor 1)	**[Ignition switch: ON]**	Approximately 5 V
110	W	Accelerator pedal position sensor 1	**[Ignition switch: ON]** • Engine stopped • Accelerator pedal: Fully released	0.6 - 0.9 V
			[Ignition switch: ON] • Engine stopped • Accelerator pedal: Fully depressed	3.9 - 4.7 V
111	B/W	Sensor ground (APP sensor 1)	**[Engine is running]** • **Warm-up condition** • Idle speed	Approximately 0 V

Diagnosis Procedure

INFOID:0000000005285052

1. CHECK GROUND CONNECTIONS

1. Turn ignition switch OFF.
2. Loosen and retighten ground screws on the body.
   Refer to EC-157, "Ground Inspection".

- ⇦ : Vehicle front
- Body ground (1)

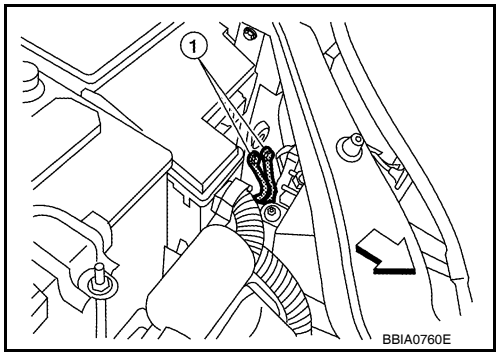

OK or NG

OK >> GO TO 2.
NG >> Repair or replace ground connections.

2. CHECK APP SENSOR 2 POWER SUPPLY CIRCUIT-I

1. Disconnect accelerator pedal position (APP) sensor (1) harness connector.
2. Turn ignition switch ON.

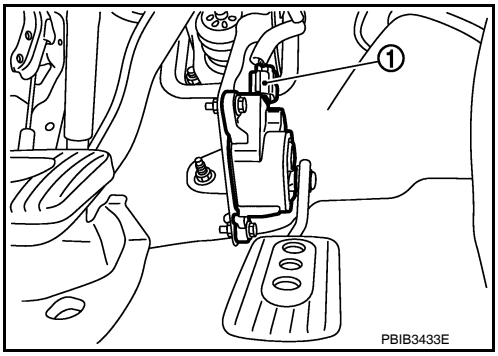

3. Check voltage between APP sensor terminal 5 and ground with CONSULT-III or tester.

Voltage : Approximately 5 V

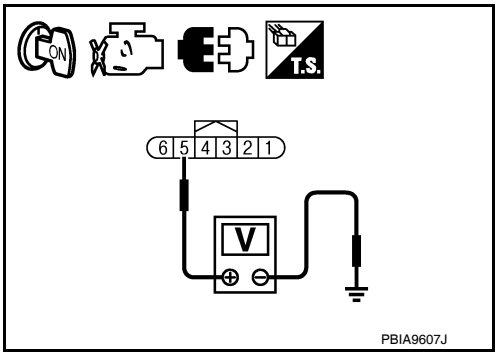

OK or NG

OK >> GO TO 6.
NG >> GO TO 3.

3. CHECK APP SENSOR 2 POWER SUPPLY CIRCUIT-II

1. Turn ignition switch OFF.
2. Disconnect ECM harness connector.
3. Check harness continuity between APP sensor terminal 5 and ECM terminal 102. Refer to Wiring Diagram.

Continuity should exist.

OK or NG

OK >> GO TO 4.
NG >> Repair open circuit.

4. CHECK APP SENSOR 2 POWER SUPPLY CIRCUIT-III

Check harness for short to power and short to ground, between the following terminals.

ECM terminal	Sensor terminal	Reference Wiring Diagram
69	Tumble control valve position sensor terminal 1	EC-486, "Wiring Diagram"
74	Refrigerant pressure sensor terminal 3	EC-571, "Wiring Diagram"
75	Crankshaft position sensor (POS) terminal 1	EC-319, "Wiring Diagram"
76	EVAP control system pressure sensor terminal 3	EC-378, "Wiring Diagram"
102	APP sensor terminal 5	EC-514, "Wiring Diagram"

OK or NG

OK >> GO TO 5.
NG >> Repair short to ground or short to power in harness or connectors.

5. CHECK COMPONENTS

Check the following.
- Crankshaft position sensor (POS) (Refer to EC-323, "Component Inspection".)
- Refrigerant pressure sensor (Refer to MTC-27.)
- EVAP control system pressure (Refer to EC-382, "Component Inspection".)
- Tumble control valve position sensor (Refer to EC-487, "Diagnosis Procedure".)

OK or NG

OK >> GO TO 10.

NG >> Replace malfunctioning component.

6. CHECK APP SENSOR 2 GROUND CIRCUIT FOR OPEN AND SHORT

1. Turn ignition switch OFF.
2. Disconnect ECM harness connector.
3. Check harness continuity between ECM terminal 104 and APP sensor terminal 1.
   Refer to Wiring Diagram.

   Continuity should exist.

4. Also check harness for short to ground and short to power.

OK or NG

OK >> GO TO 7.
NG >> Repair open circuit or short to ground or short to power in harness or connectors.

7. CHECK APP SENSOR 2 INPUT SIGNAL CIRCUIT FOR OPEN AND SHORT

1. Check harness continuity between ECM terminal 103 and APP sensor terminal 6.
   Refer to Wiring Diagram.

   Continuity should exist.

2. Also check harness for short to ground and short to power.

OK or NG

OK >> GO TO 8.
NG >> Repair open circuit or short to ground or short to power in harness or connectors.

8. CHECK APP SENSOR

Refer to EC-517, "Component Inspection".

OK or NG

OK >> GO TO 10.
NG >> GO TO 9.

9. REPLACE ACCELERATOR PEDAL ASSEMBLY

1. Replace accelerator pedal assembly.
2. Perform EC-99, "Accelerator Pedal Released Position Learning".
3. Perform EC-99, "Throttle Valve Closed Position Learning".
4. Perform EC-99, "Idle Air Volume Learning".

>> **INSPECTION END**

10. CHECK INTERMITTENT INCIDENT

Refer to EC-152.

>> **INSPECTION END**

Component Inspection

INFOID:0000000005285053

ACCELERATOR PEDAL POSITION SENSOR

1. Reconnect all harness connectors disconnected.
2. Turn ignition switch ON.

3. Check voltage between ECM terminals 110 (APP sensor 1 signal), 103 (APP sensor 2 signal) and ground under the following conditions.

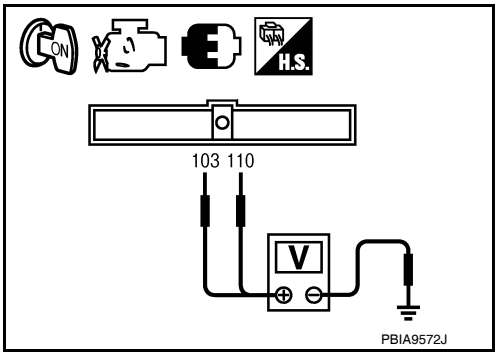

Terminal	Accelerator pedal	Voltage
110 (Accelerator pedal position sensor 1)	Fully released	0.6 - 0.9 V
	Fully depressed	3.9 - 4.7 V
103 (Accelerator pedal position sensor 2)	Fully released	0.3 - 0.6 V
	Fully depressed	1.95 - 2.4 V

4. If NG, replace accelerator pedal assembly and go to next step.
5. Perform EC-99, "Accelerator Pedal Released Position Learning".
6. Perform EC-99, "Throttle Valve Closed Position Learning".
7. Perform EC-99, "Idle Air Volume Learning".

Removal and Installation

INFOID:0000000005285054

ACCELERATOR PEDAL

Refer to ACC-4.

DTC P2135 TP SENSOR

Component Description

INFOID:0000000005285055

Electric throttle control actuator consists of throttle control motor, throttle position sensor, etc. The throttle position sensor responds to the throttle valve movement.
The throttle position sensor has two sensors. These sensors are a kind of potentiometers which transform the throttle valve position into output voltage, and emit the voltage signal to the ECM. In addition, these sensors detect the opening and closing speed of the throttle valve and feed the voltage signals to the ECM. The ECM judges the current opening angle of the throttle valve from these signals and the ECM controls the throttle control motor to make the throttle valve opening angle properly in response to driving condition.

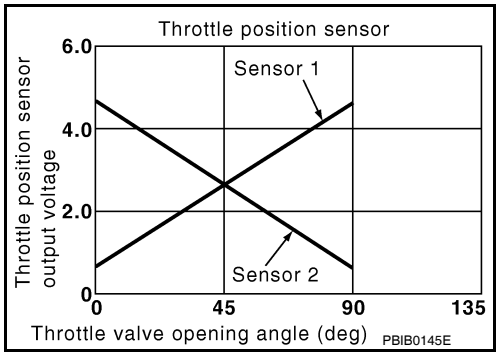

CONSULT-III Reference Value in Data Monitor Mode

INFOID:0000000005285056

Specification data are reference values.

Monitor item	Condition		Specification
TP SEN 1-B1 TP SEN 2-B1*	• Ignition switch: ON (Engine stopped) • Shift lever: D (CVT), 1st (M/T)	Accelerator pedal: Fully released	More than 0.36 V
		Accelerator pedal: Fully depressed	Less than 4.75 V

*: Throttle position sensor 2 signal is converted by ECM internally. Thus, it differs from ECM terminal voltage signal.

On Board Diagnosis Logic

INFOID:0000000005285057

This self-diagnosis has the one trip detection logic.
NOTE:
If DTC P2135 is displayed with DTC P0643, first perform the trouble diagnosis for DTC P0643.
Refer to EC-424.

DTC No.	Trouble diagnosis name	DTC detecting condition	Possible cause
P2135 2135	Throttle position sensor circuit range/performance	Rationally incorrect voltage is sent to ECM compared with the signals from TP sensor 1 and TP sensor 2.	• Harness or connector (TP sensor 1 and 2 circuit is open or short-ed.) • Electric throttle control actuator (TP sensor 1 and 2)

FAIL-SAFE MODE

When the malfunction is detected, the ECM enters fail-safe mode and the MIL lights up.

Engine operation condition in fail-safe mode
The ECM controls the electric throttle control actuator in regulating the throttle opening in order for the idle position to be within +10 degrees. The ECM regulates the opening speed of the throttle valve to be slower than the normal condition. So, the acceleration will be poor.

DTC Confirmation Procedure

INFOID:0000000005285058

NOTE:
If DTC Confirmation Procedure has been previously conducted, always turn ignition switch OFF and wait at least 10 seconds before conducting the next test.
TESTING CONDITION:
Before performing the following procedure, confirm that battery voltage is more than 8 V at idle.

1. Start engine and let it idle for 1 second.
2. Check DTC.
3. If DTC is detected, go to EC-521, "Diagnosis Procedure".

Wiring Diagram

INFOID:0000000005285059

EC-TPS3-01

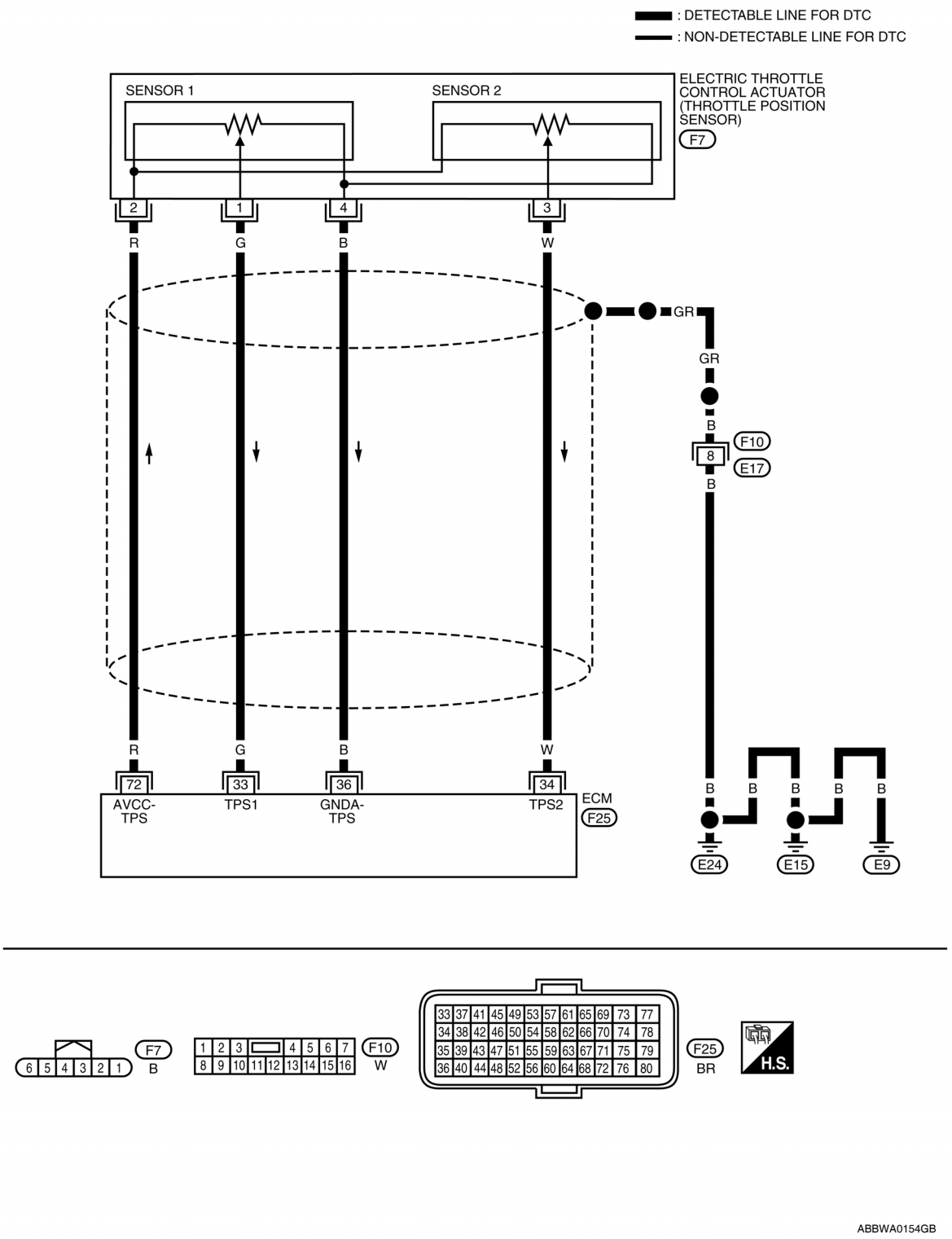

Specification data are reference values and are measured between each terminal and ground.

CAUTION:

Do not use ECM ground terminals when measuring input/output voltage. Doing so may result in damage to the ECM's transistor. Use a ground other than ECM terminals, such as the ground.

TERMINAL NO.	WIRE COLOR	ITEM	CONDITION	DATA (DC Voltage)
33	G	Throttle position sensor 1	**[Ignition switch: ON]** • Engine stopped • Shift lever: D (CVT), 1st (M/T) • Accelerator pedal: Fully released	More than 0.36 V
			[Ignition switch: ON] • Engine stopped • Shift lever: D (CVT), 1st (M/T) • Accelerator pedal: Fully depressed	Less than 4.75 V
34	W	Throttle position sensor 2	**[Ignition switch: ON]** • Engine stopped • Shift lever: D (CVT), 1st (M/T) • Accelerator pedal: Fully released	Less than 4.75 V
			[Ignition switch: ON] • Engine stopped • Shift lever: D (CVT), 1st (M/T) • Accelerator pedal: Fully depressed	More than 0.36 V
36	B	Sensor ground (Throttle position sensor)	**[Engine is running]** • **Warm-up condition** • Idle speed	Approximately 0 V
72	R	Sensor power supply (Throttle position sensor)	**[Ignition switch: ON]**	Approximately 5 V

Diagnosis Procedure

INFOID:0000000005285060

1. CHECK GROUND CONNECTIONS

1. Turn ignition switch OFF.
2. Loosen and retighten ground screws on the body.
   Refer to EC-157, "Ground Inspection".

- ⇦ : Vehicle front
- Body ground (1)

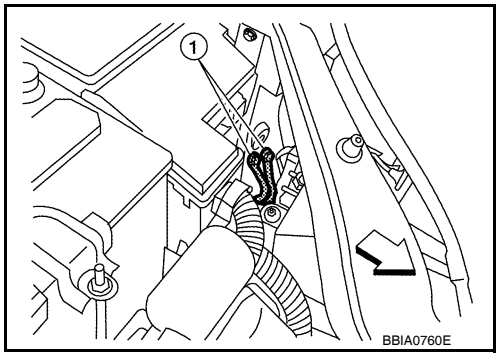

OK or NG

OK >> GO TO 2.
NG >> Repair or replace ground connections.

2. CHECK THROTTLE POSITION SENSOR POWER SUPPLY CIRCUIT

1. Disconnect electric throttle control actuator (1) harness connector.
2. Turn ignition switch ON.

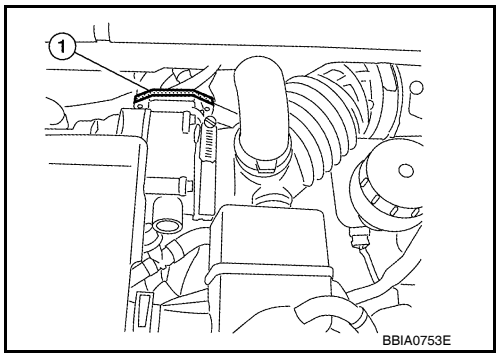

3. Check voltage between electric throttle control actuator terminal 2 and ground with CONSULT-III or tester.

Voltage : Approximately 5 V

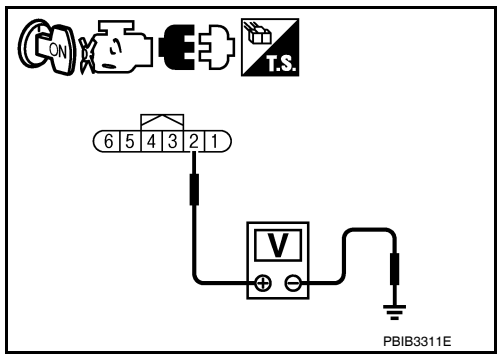

OK or NG

OK >> GO TO 3.
NG >> Repair open circuit or short to ground or short to power in harness or connectors.

3. CHECK THROTTLE POSITION SENSOR GROUND CIRCUIT FOR OPEN AND SHORT

1. Turn ignition switch OFF.
2. Disconnect ECM harness connector.
3. Check harness continuity between electric throttle control actuator terminal 4 and ECM terminal 36. Refer to Wiring Diagram.

Continuity should exist.

4. Also check harness for short to ground and short to power.

OK or NG

OK >> GO TO 4.
NG >> Repair open circuit or short to ground or short to power in harness or connectors.

4. CHECK THROTTLE POSITION SENSOR INPUT SIGNAL CIRCUIT FOR OPEN AND SHORT

1. Check harness continuity between the following;
electric throttle control actuator terminal 1 and ECM terminal 33,
electric throttle control actuator terminal 3 and ECM terminal 34.
Refer to Wiring Diagram.

Continuity should exist.

2. Also check harness for short to ground and short to power.

OK or NG

OK >> GO TO 5.
NG >> Repair open circuit or short to ground or short to power in harness or connectors.

5. CHECK THROTTLE POSITION SENSOR

Refer to EC-522, "Component Inspection".

OK or NG

OK >> GO TO 7.
NG >> GO TO 6.

6. REPLACE ELECTRIC THROTTLE CONTROL ACTUATOR

1. Replace the electric throttle control actuator.
2. Perform EC-99, "Throttle Valve Closed Position Learning".
3. Perform EC-99, "Idle Air Volume Learning".

>> **INSPECTION END**

7. CHECK INTERMITTENT INCIDENT

Refer to EC-152.

>> **INSPECTION END**

Component Inspection

INFOID:0000000005285061

THROTTLE POSITION SENSOR

1. Reconnect all harness connectors disconnected.
2. Perform EC-99, "Throttle Valve Closed Position Learning".
3. Turn ignition switch ON.
4. Set shift lever to D position (CVT) or 1st position (M/T).
5. Check voltage between ECM terminals 33 (TP sensor 1 signal), 34 (TP sensor 2 signal) and ground under the following conditions.

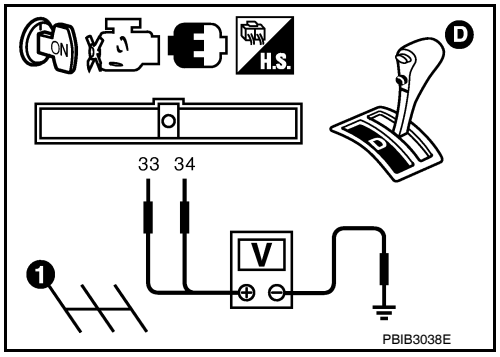

Terminal	Accelerator pedal	Voltage
33 (Throttle position sensor 1)	Fully released	More than 0.36 V
	Fully depressed	Less than 4.75 V
34 (Throttle position sensor 2)	Fully released	Less than 4.75 V
	Fully depressed	More than 0.36 V

6. If NG, replace electric throttle control actuator and go to the next step.
7. Perform EC-99, "Throttle Valve Closed Position Learning".
8. Perform EC-99, "Idle Air Volume Learning".

Removal and Installation

INFOID:0000000005285062

ELECTRIC THROTTLE CONTROL ACTUATOR

Refer to EM-18.

DTC P2138 APP SENSOR

Component Description

INFOID:0000000005285063

The accelerator pedal position sensor is installed on the upper end of the accelerator pedal assembly. The sensor detects the accelerator position and sends a signal to the ECM.
Accelerator pedal position sensor has two sensors. These sensors are a kind of potentiometers which transform the accelerator pedal position into output voltage, and emit the voltage signal to the ECM. In addition, these sensors detect the opening and closing speed of the accelerator pedal and feed the voltage signals to the ECM. The ECM judges the current opening angle of the accelerator pedal from these signals and controls the throttle control motor based on these signals.

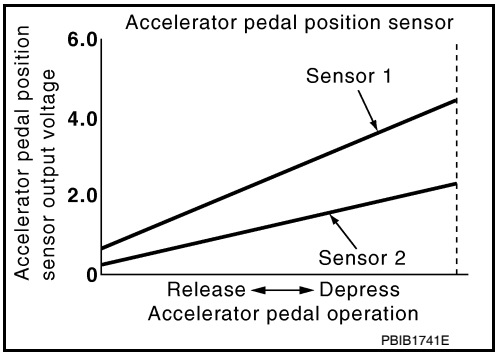

Idle position of the accelerator pedal is determined by the ECM receiving the signal from the accelerator pedal position sensor. The ECM uses this signal for the engine operation such as fuel cut.

CONSULT-III Reference Value in Data Monitor Mode

INFOID:0000000005285064

Specification data are reference values.

Monitor item	Condition		Specification
ACCEL SEN 1	• Ignition switch: ON (Engine stopped)	Accelerator pedal: Fully released	0.6 - 0.9 V
		Accelerator pedal: Fully depressed	4.0 - 4.8 V
ACCEL SEN 2*	• Ignition switch: ON (Engine stopped)	Accelerator pedal: Fully released	0.6 - 0.9 V
		Accelerator pedal: Fully depressed	3.9 - 4.8 V
CLSD THL POS	• Ignition switch: ON (Engine stopped)	Accelerator pedal: Fully released	ON
		Accelerator pedal: Slightly depressed	OFF

*: Accelerator pedal position sensor 2 signal is converted by ECM internally. Thus, it differs from ECM terminal voltage.

On Board Diagnosis Logic

INFOID:0000000005285065

This self-diagnosis has the one trip detection logic.
NOTE:
If DTC P2138 is displayed with DTC P0643, first perform the trouble diagnosis for DTC P0643.
Refer to EC-424.

DTC No.	Trouble diagnosis name	DTC detecting condition	Possible cause
P2138 2138	Accelerator pedal position sensor circuit range/performance	Rationally incorrect voltage is sent to ECM compared with the signals from APP sensor 1 and APP sensor 2.	• Harness or connector (APP sensor 1 and 2 circuit is open or shorted.) [Crankshaft position sensor (POS) circuit is shorted.] (Refrigerant pressure sensor circuit is shorted.) (EVAP control system pressure sensor circuit is shorted.) (Tumble control valve position sensor circuit is shorted.) • Accelerator pedal position sensor (APP sensor 1 and 2) • Crankshaft position sensor (POS) • Refrigerant pressure sensor • EVAP control system pressure sensor • Tumble control valve position sensor

FAIL-SAFE MODE

When the malfunction is detected, ECM enters fail-safe mode and the MIL lights up.

Engine operating condition in fail-safe mode
The ECM controls the electric throttle control actuator in regulating the throttle opening in order for the idle position to be within +10 degrees. The ECM regulates the opening speed of the throttle valve to be slower than the normal condition. So, the acceleration will be poor.

DTC Confirmation Procedure

INFOID:0000000005285066

NOTE:
If DTC Confirmation Procedure has been previously conducted, always turn ignition switch OFF and wait at least 10 seconds before conducting the next test.
TESTING CONDITION:
Before performing the following procedure, confirm that battery voltage is more than 8 V at idle.

1. Start engine and let it idle for 1 second.
2. Check DTC.
3. If DTC is detected, go to EC-527, "Diagnosis Procedure".

Wiring Diagram

INFOID:0000000005285067

EC-APPS3-01

: DETECTABLE LINE FOR DTC
: NON-DETECTABLE LINE FOR DTC

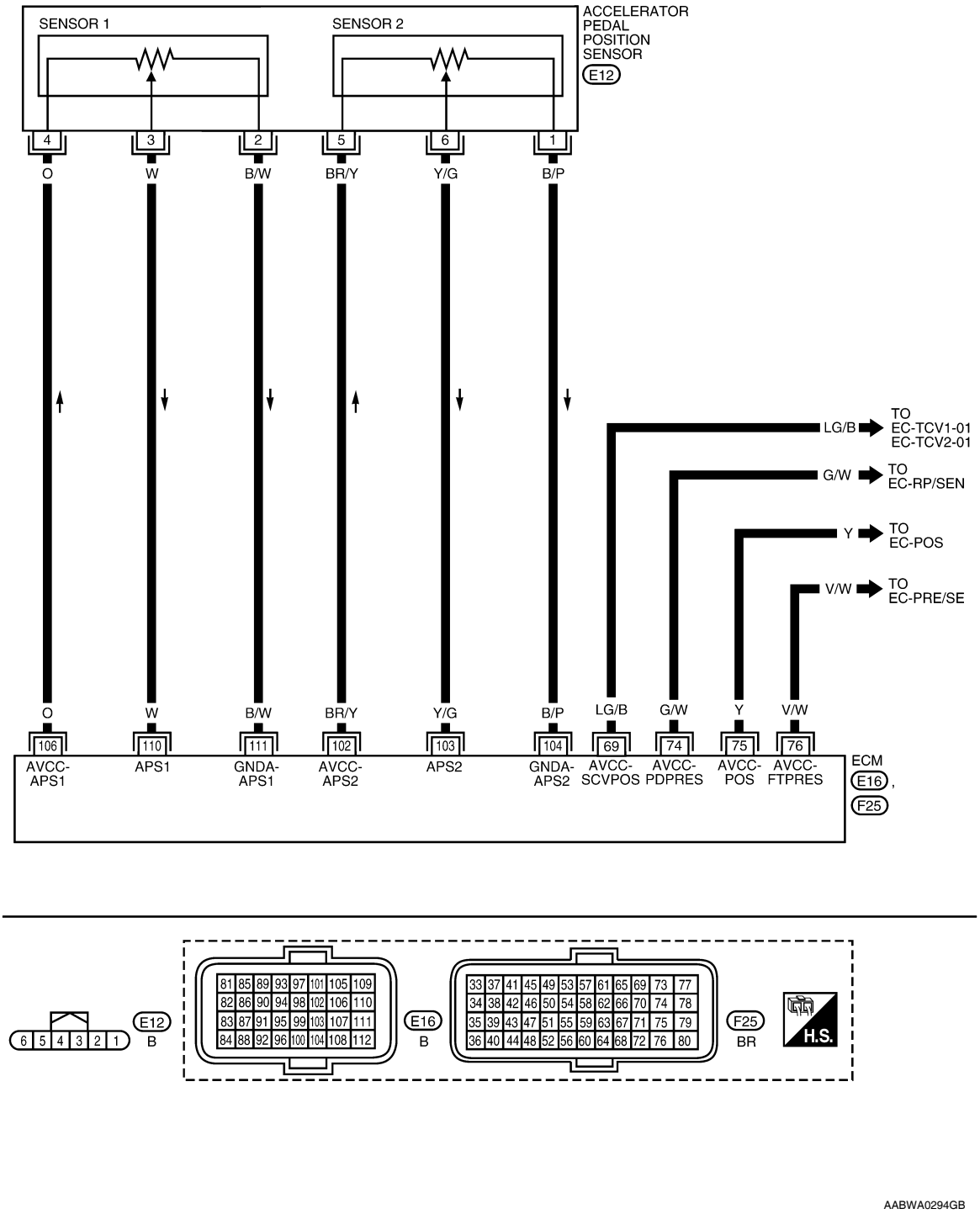

Specification data are reference values and are measured between each terminal and ground.

CAUTION:

Do not use ECM ground terminals when measuring input/output voltage. Doing so may result in damage to the ECM's transistor. Use a ground other than ECM terminals, such as the ground.

TERMINAL NO.	WIRE COLOR	ITEM	CONDITION	DATA (DC Voltage)
69	LG/B	Sensor power supply (Tumble control valve position sensor)	**[Ignition switch: ON]**	Approximately 5 V
74	G/W	Sensor power supply (Refrigerant pressure sensor)	**[Ignition switch: ON]**	Approximately 5 V
75	Y	Sensor power supply [Crankshaft position sensor (POS)]	**[Ignition switch: ON]**	Approximately 5 V
76	V/W	EVAP control system pressure sensor power supply	**[Ignition switch: ON]**	Approximately 5 V
102	BR/Y	Sensor power supply (APP sensor 2)	**[Ignition switch: ON]**	Approximately 5 V
103	Y/G	Accelerator pedal position sensor 2	**[Ignition switch: ON]** • Engine stopped • Accelerator pedal: Fully released	0.3 - 0.6 V
			[Ignition switch: ON] • Engine stopped • Accelerator pedal: Fully depressed	1.95 - 2.4 V
104	B/P	Sensor ground (APP sensor 2)	**[Engine is running]** • **Warm-up condition** • Idle speed	Approximately 0 V
106	O	Sensor power supply (APP sensor 1)	**[Ignition switch: ON]**	Approximately 5 V
110	W	Accelerator pedal position sensor 1	**[Ignition switch: ON]** • Engine stopped • Accelerator pedal: Fully released	0.6 - 0.9 V
			[Ignition switch: ON] • Engine stopped • Accelerator pedal: Fully depressed	3.9 - 4.7 V
111	B/W	Sensor ground (APP sensor 1)	**[Engine is running]** • **Warm-up condition** • Idle speed	Approximately 0 V

Diagnosis Procedure

INFOID:0000000005285068

1. CHECK GROUND CONNECTIONS

1. Turn ignition switch OFF.
2. Loosen and retighten ground screws on the body.
   Refer to EC-157, "Ground Inspection".

- ⇦ : Vehicle front
- Body ground (1)

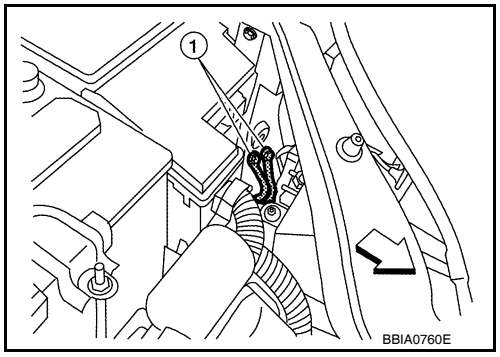

OK or NG

OK >> GO TO 2.
NG >> Repair or replace ground connections.

2. CHECK APP SENSOR 1 POWER SUPPLY CIRCUIT

1. Disconnect accelerator pedal position (APP) sensor (1) harness connector.
2. Turn ignition switch ON.

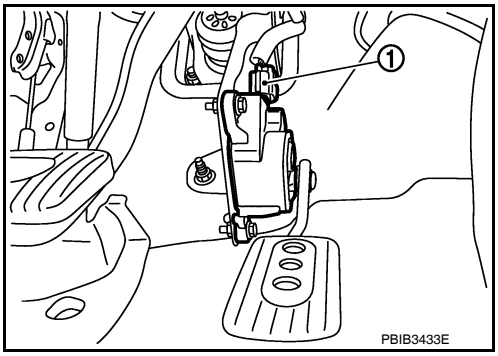

3. Check voltage between APP sensor terminal 4 and ground with CONSULT-III or tester.

Voltage : Approximately 5 V

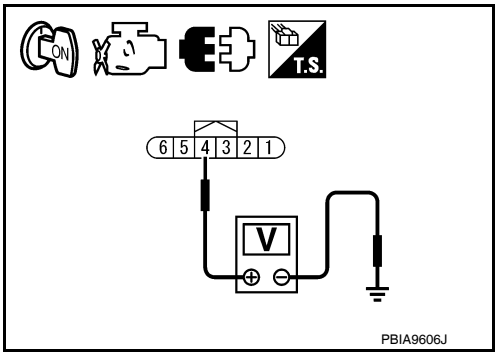

OK or NG

OK >> GO TO 3.
NG >> Repair open circuit or short to ground or short to power in harness or connectors.

3. CHECK APP SENSOR 2 POWER SUPPLY CIRCUIT-I

1. Turn ignition switch ON.
2. Check voltage between APP sensor terminal 5 and ground with CONSULT-III or tester.

Voltage : Approximately 5 V

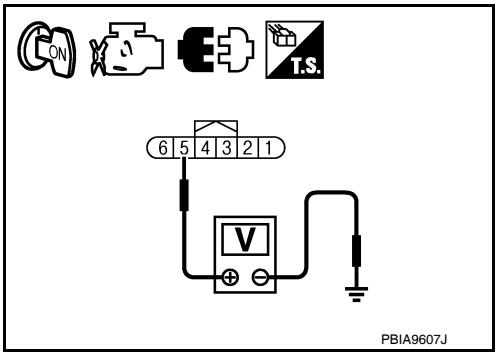

OK or NG

OK >> GO TO 7.
NG >> GO TO 4.

4. CHECK APP SENSOR 2 POWER SUPPLY CIRCUIT-II

1. Turn ignition switch OFF.
2. Disconnect ECM harness connector.
3. Check harness continuity between APP sensor terminal 5 and ECM terminal 102. Refer to Wiring Diagram.

Continuity should exist.

OK or NG

OK >> GO TO 5.
NG >> Repair open circuit.

5. CHECK APP SENSOR 2 POWER SUPPLY CIRCUIT-III

Check harness for short to power and short to ground, between the following terminals.

ECM terminal	Sensor terminal	Reference Wiring Diagram
69	Tumble control valve position sensor terminal 1	EC-486, "Wiring Diagram"
74	Refrigerant pressure sensor terminal 3	EC-571, "Wiring Diagram"
75	Crankshaft position sensor (POS) terminal 1	EC-319, "Wiring Diagram"

ECM terminal	Sensor terminal	Reference Wiring Diagram
76	EVAP control system pressure sensor terminal 3	EC-378, "Wiring Diagram"
102	APP sensor terminal 5	EC-514, "Wiring Diagram"

OK or NG

OK >> GO TO 6.
NG >> Repair short to ground or short to power in harness or connectors.

6. CHECK COMPONENTS

Check the following.
- Crankshaft position sensor (POS) (Refer to EC-323, "Component Inspection".)
- Refrigerant pressure sensor (Refer to MTC-27.)
- EVAP control system pressure (Refer to EC-382, "Component Inspection".)
- Tumble control valve position sensor (Refer to EC-487, "Diagnosis Procedure".)

OK or NG

OK >> GO TO 11.
NG >> Replace malfunctioning component.

7. CHECK APP SENSOR GROUND CIRCUIT FOR OPEN AND SHORT

1. Turn ignition switch OFF.
2. Disconnect ECM harness connector.
3. Check harness continuity between the following;
   ECM terminal 111 and APP sensor terminal 2,
   ECM terminal 104 and APP sensor terminal 1.
   Refer to Wiring Diagram.

   Continuity should exist.

4. Also check harness for short to ground and short to power.

OK or NG

OK >> GO TO 8.
NG >> Repair open circuit or short to ground or short to power in harness or connectors.

8. CHECK APP SENSOR INPUT SIGNAL CIRCUIT FOR OPEN AND SHORT

1. Check harness continuity between the following;
   ECM terminal 110 and APP sensor terminal 3,
   ECM terminal 103 and APP sensor terminal 6.
   Refer to Wiring Diagram.

   Continuity should exist.

2. Also check harness for short to ground and short to power.

OK or NG

OK >> GO TO 9.
NG >> Repair open circuit or short to ground or short to power in harness or connectors.

9. CHECK APP SENSOR

Refer to EC-530, "Component Inspection".

OK or NG

OK >> GO TO 11.
NG >> GO TO 10.

10. REPLACE ACCELERATOR PEDAL ASSEMBLY

1. Replace accelerator pedal assembly.
2. Perform EC-99, "Accelerator Pedal Released Position Learning".
3. Perform EC-99, "Throttle Valve Closed Position Learning".
4. Perform EC-99, "Idle Air Volume Learning".

>> **INSPECTION END**

11. CHECK INTERMITTENT INCIDENT

Refer to EC-152.

>> **INSPECTION END**

Component Inspection

INFOID:0000000005285069

ACCELERATOR PEDAL POSITION SENSOR

1. Reconnect all harness connectors disconnected.
2. Turn ignition switch ON.
3. Check voltage between ECM terminals 110 (APP sensor 1 signal), 103 (APP sensor 2 signal) and ground under the following conditions.

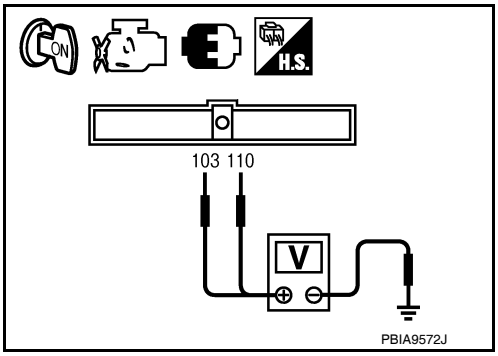

Terminal	Accelerator pedal	Voltage
110 (Accelerator pedal position sensor 1)	Fully released	0.6 - 0.9 V
	Fully depressed	3.9 - 4.7 V
103 (Accelerator pedal position sensor 2)	Fully released	0.3 - 0.6 V
	Fully depressed	1.95 - 2.4 V

4. If NG, replace accelerator pedal assembly and go to next step.
5. Perform EC-99, "Accelerator Pedal Released Position Learning".
6. Perform EC-99, "Throttle Valve Closed Position Learning".
7. Perform EC-99, "Idle Air Volume Learning".

Removal and Installation

INFOID:0000000005285070

ACCELERATOR PEDAL

Refer to ACC-4.

DTC P2A00 A/F SENSOR 1

Component Description

INFOID:0000000005285071

The air fuel ratio (A/F) sensor 1 is a planar one-cell limit current sensor. The sensor element of the A/F sensor 1 is composed an electrode layer, which transports ions. It has a heater in the element.
The sensor is capable of precise measurement λ = 1, but also in the lean and rich range. Together with its control electronics, the sensor outputs a clear, continuous signal throughout a wide λ range.
The exhaust gas components diffuse through the diffusion layer at the sensor cell. An electrode layer is applied voltage, and this current relative oxygen density in lean. Also this current relative hydrocarbon density in rich.
Therefore, the A/F sensor 1 is able to indicate air fuel ratio by this electrode layer of current. In addition, a heater is integrated in the sensor to ensure the required operating temperature of about 800°C (1,472°F).

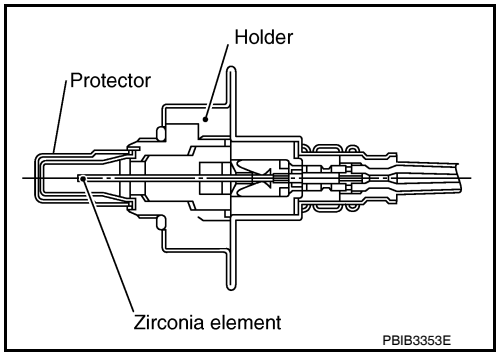

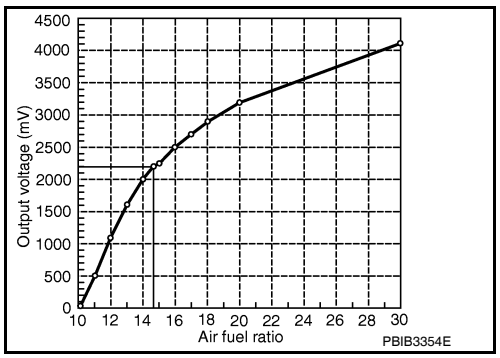

CONSULT-III Reference Value in Data Monitor Mode

INFOID:0000000005285072

Specification data are reference values.

Monitor item	Condition		Specification
A/F SEN1 (B1)	• Engine: After warming up	Maintaining engine speed at 2,000 rpm	Fluctuates around 2.2 V

On Board Diagnosis Logic

INFOID:0000000005285073

To judge the malfunction, the A/F signal computed by ECM from the A/F sensor 1 signal is monitored not to be shifted to LEAN side or RICH side.

DTC No.	Trouble diagnosis name	DTC detecting condition	Possible Cause
P2A00 2A00	Air fuel ratio (A/F) sensor 1 circuit range/performance	• The output voltage computed by ECM from the A/F sensor 1 signal is shifted to the lean side for a specified period. • The A/F signal computed by ECM from the A/F sensor 1 signal is shifted to the rich side for a specified period.	• Air fuel ratio (A/F) sensor 1 • Air fuel ratio (A/F) sensor 1 heater • Fuel pressure • Fuel injector • Intake air leaks

DTC Confirmation Procedure

INFOID:0000000005285074

NOTE:
If DTC Confirmation Procedure has been previously conducted, always turn ignition switch OFF and wait at least 10 seconds before conducting the next test.
TESTING CONDITION:
Before performing the following procedure, confirm that battery voltage is more than 11 V at idle.

WITH CONSULT-III
1. Start engine and warm it up to normal operating temperature.
2. Turn ignition switch OFF and wait at least 10 seconds.

3. Turn ignition switch ON and select “SELF-LEARNING CONT” in “WORK SUPPORT” mode with CONSULT-III.
4. Clear the self-learning coefficient by touching “CLEAR”.
5. Turn ignition switch OFF and wait at least 10 seconds.
6. Start engine and keep the engine speed between 3,500 and 4,000 rpm for 1 minute under no load.
7. Let engine idle for 1 minute.
8. Keep engine speed between 2,500 and 3,000 rpm for 20 minutes.
9. Check 1st trip DTC.
10. If 1st trip DTC is detected, go to EC-534, "Diagnosis Procedure".

WITH GST

1. Start engine and warm it up to normal operating temperature.
2. Turn ignition switch OFF and wait at least 10 seconds.
3. Disconnect mass air flow sensor (1) harness connector.
4. Start engine and let it idle for at least 5 seconds.
5. Stop engine and reconnect mass air flow sensor harness connector.
6. Select Service $03 with GST and make sure that DTC P0102 is detected.
7. Select Service $04 with GST and erase the DTC P0102.
8. Start engine and keep the engine speed between 3,500 and 4,000 rpm for 1 minute under no load.
9. Let engine idle for 1 minute.
10. Keep engine speed between 2,500 and 3,000 rpm for 20 minutes.
11. Select Service $07 with GST.
    If 1st trip DTC is detected, go to EC-534, "Diagnosis Procedure".

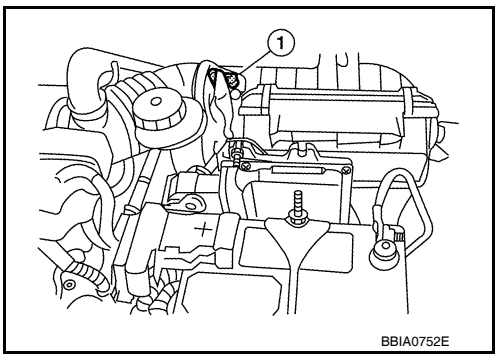

Wiring Diagram

INFOID:0000000005285075

EC-A/F-01

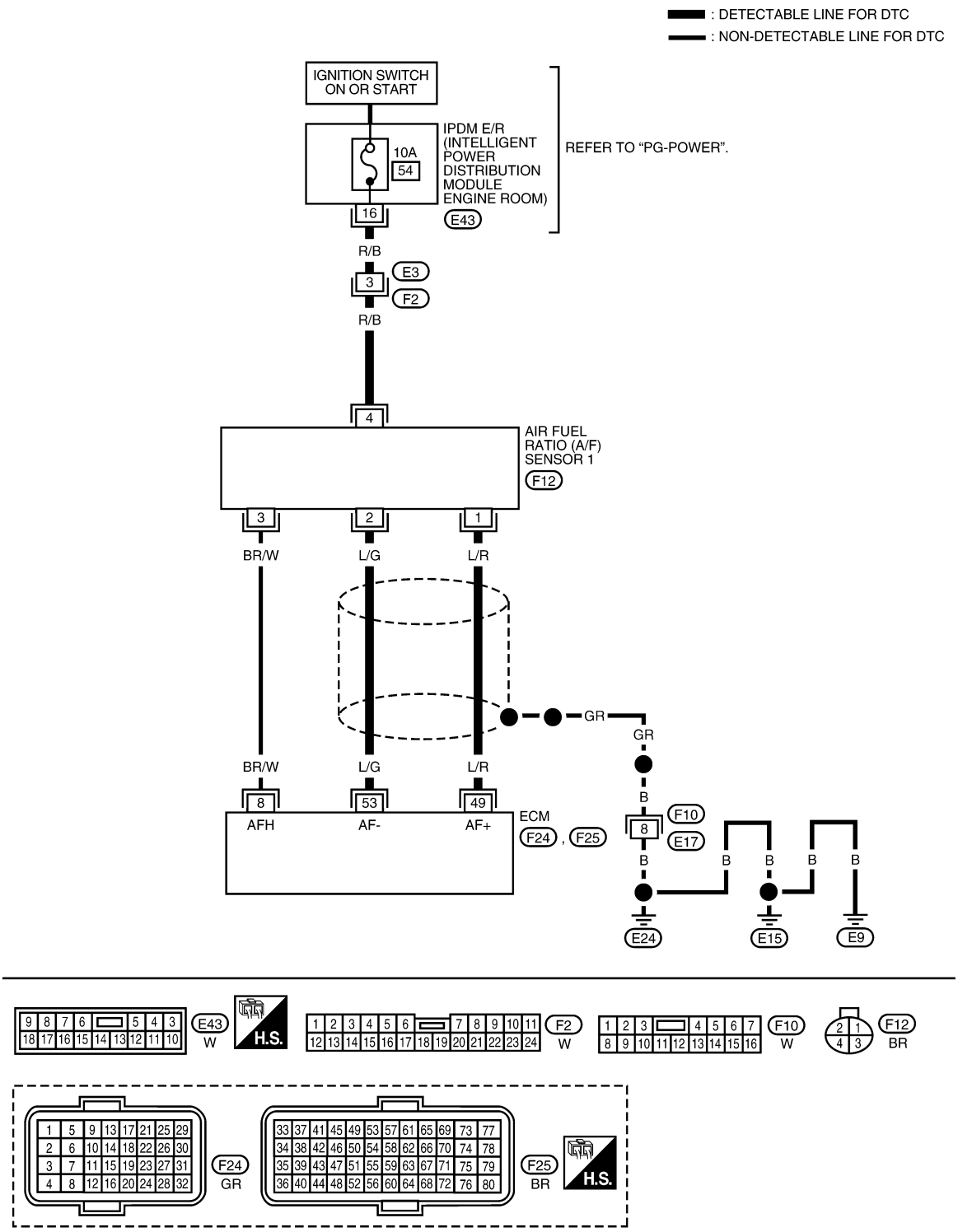

Specification data are reference values and are measured between each terminal and ground.
Pulse signal is measured by CONSULT-III.

CAUTION:

Do not use ECM ground terminals when measuring input/output voltage. Doing so may result in damage to the ECM's transistor. Use a ground other than ECM terminals, such as the ground.

TERMINAL NO.	WIRE COLOR	ITEM	CONDITION	DATA (DC Voltage)
8	BR/W	A/F sensor 1 heater	**[Engine is running]** • **Warm-up condition** • Idle speed (More than 140 seconds after starting engine)	Approximately 2.9 - 8.8 V★ 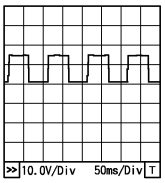 PBIA8148J
49	L/R	A/F sensor 1	**[Engine is running]** • **Warm-up condition** • Engine speed: 2,000 rpm	Approximately 1.8 V Output voltage varies with air fuel ratio.
53	L/G	A/F sensor 1	**[Ignition switch: ON]**	Approximately 2.2 V

★: Average voltage for pulse signal (Actual pulse signal can be confirmed by oscilloscope.)

Diagnosis Procedure

INFOID:0000000005285076

1. CHECK GROUND CONNECTIONS

1. Turn ignition switch OFF.
2. Loosen and retighten ground screws on the body.
   Refer to EC-157, "Ground Inspection".

- ⇦ : Vehicle front
- Body ground (1)

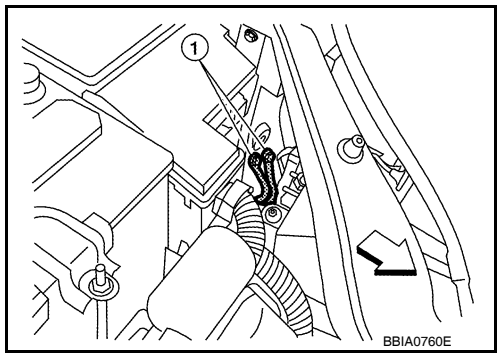

OK or NG

OK >> GO TO 2.
NG >> Repair or replace ground connections.

2. RETIGHTEN AIR FUEL RATIO (A/F) SENSOR 1

Loosen and retighten the air fuel ratio (A/F) sensor 1.
Refer to EM-24, "Removal and Installation".

>> GO TO 3.

3. CHECK FOR INTAKE AIR LEAK

1. Start engine and run it at idle.
2. Listen for an intake air leak after the mass air flow sensor.

OK or NG

OK >> GO TO 4.
NG >> Repair or replace.

4. CLEAR THE SELF-LEARNING DATA.

With CONSULT-III

1. Start engine and warm it up to normal operating temperature.
2. Select “SELF-LEARNING CONT” in “WORK SUPPORT” mode with CONSULT-III.
3. Clear the self-learning control coefficient by touching “CLEAR”.
4. Run engine for at least 10 minutes at idle speed.
5. Check 1st trip DTC.
   Is the 1st trip DTC P0171 and P0172 detected?

Is it difficult to start engine?

Without CONSULT-III

1. Start engine and warm it up to normal operating temperature.
2. Turn ignition switch OFF.
3. Disconnect mass air flow sensor (1) harness connector.
4. Restart engine and let it idle for at least 5 seconds.
5. Stop engine and reconnect mass air flow sensor harness connector.
6. Make sure DTC P0102 is displayed.
7. Erase the DTC memory. Refer to EC-62, "Emission-related Diagnostic Information".
8. Make sure DTC P0000 is displayed.
9. Run engine for at least 10 minutes at idle speed.
   Is the 1st trip DTC P0171 and P0172 detected?
   Is it difficult to start engine?

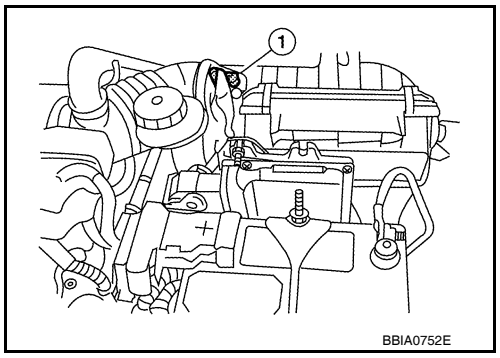

Yes or No

Yes >> Perform trouble diagnosis for DTC P0171 or P0172. Refer to EC-275 or EC-281.
No >> GO TO 5.

5. CHECK HARNESS CONNECTOR

1. Turn ignition switch OFF.
2. Disconnect A/F sensor 1 harness connector (1).
- Air fuel ratio (A/F) sensor (2)
3. Check harness connector for water.

Water should no exist.

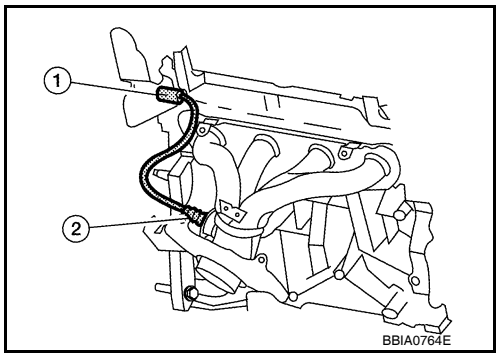

OK or NG

OK >> GO TO 6.
NG >> Repair or replace harness connector.

6. CHECK AIR FUEL RATIO (A/F) SENSOR 1 POWER SUPPLY CIRCUIT

1. Turn ignition switch ON.
2. Check voltage between A/F sensor 1 terminal 4 and ground with CONSULT-III or tester.

Voltage : Battery voltage

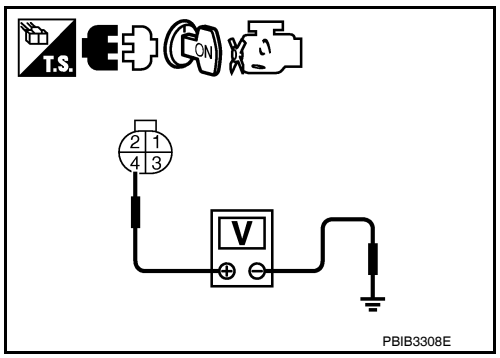

OK or NG

OK >> GO TO 8.
NG >> GO TO 7.

7. DETECT MALFUNCTIONING PART

Check the following.
- Harness connectors E3, F2
- 10 A fuse
- Harness for open or short between A/F sensor 1 and fuse

>> Repair or replace harness or connectors.

8. CHECK A/F SENSOR 1 INPUT SIGNAL CIRCUIT FOR OPEN AND SHORT

1. Turn ignition switch OFF.
2. Disconnect ECM harness connector.
3. Check harness continuity between the following terminals. Refer to Wiring Diagram.

A/F sensor 1 terminal	ECM terminal
1	49
2	53

Continuity should exist.

4. Check harness continuity between ECM terminals 49, 53 or A/F sensor 1 terminals 1, 2 and ground. Refer to Wiring Diagram.

Continuity should not exist.

5. Also check harness for short to power.

OK or NG

OK >> GO TO 9.
NG >> Repair open circuit or short to ground or short to power in harness or connectors.

9. CHECK A/F SENSOR 1 HEATER

Refer to EC-172, "Component Inspection".

OK or NG

OK >> GO TO 10.
NG >> GO TO 11.

10. CHECK INTERMITTENT INCIDENT

Perform EC-152.

OK or NG

OK >> GO TO 11.
NG >> Repair or replace.

11. REPLACE AIR FUEL RATIO (A/F) SENSOR 1

Replace air fuel ratio (A/F) sensor 1.

CAUTION:

- **Discard any air fuel ratio (A/F) sensor which has been dropped from a height of more than 0.5 m (19.7 in) onto a hard surface such as a concrete floor; use a new one.**
- **Before installing new air fuel ratio (A/F) sensor, clean exhaust system threads using Heated Oxygen Sensor Thread Cleaner tool J-43897-18 or J-43897-12 and approved anti-seize lubricant.**

>> GO TO 12.

12. CONFIRM A/F ADJUSTMENT DATA

1. Turn ignition switch ON.
2. Select “A/F ADJ-B1” in “DATA MONITOR” mode with CONSULT-III.
3. Make sure that “0.000” is displayed on CONSULT-III screen.

OK or NG

OK >> **INSPECTION END**
NG >> GO TO 13.

13. CLEAR THE SELF-LEARNING DATA

With CONSULT-III

1. Start engine and warm it up to normal operating temperature.
2. Select “SELF-LEARNING CONT” in “WORK SUPPORT” mode with CONSULT-III.
3. Clear the self-learning control coefficient by touching “CLEAR”.

Without CONSULT-III

1. Start engine and warm it up to normal operating temperature.
2. Turn ignition switch OFF.

3. Disconnect mass air flow sensor harness (1) connector.
4. Restart engine and let it idle for at least 5 seconds.
5. Stop engine and reconnect mass air flow sensor harness connector.
6. Make sure DTC P0102 is displayed.
7. Erase the DTC memory. Refer to EC-62, "Emission-related Diagnostic Information".
8. Make sure DTC P0000 is displayed.

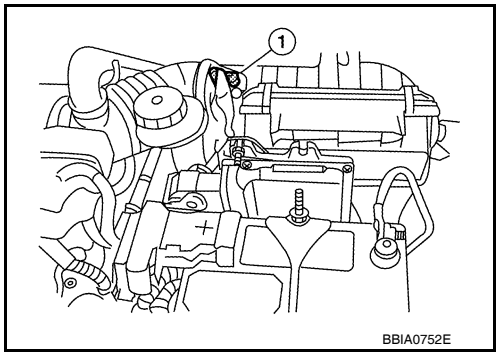

>> GO TO 14.

14. CONFIRM A/F ADJUSTMENT DATA

1. Turn ignition switch OFF and then ON.
2. Select “A/F ADJ-B1” in “DATA MONITOR” mode with CONSULT-III.
3. Make sure that “0.000” is displayed on CONSULT-III screen.

>> **INSPECTION END**

Removal and Installation

INFOID:0000000005285077

AIR FUEL RATIO SENSOR

Refer to EM-23.

ASCD BRAKE SWITCH

Component Description

INFOID:0000000005285078

When depress on the brake pedal, ASCD brake switch (1) is turned OFF and stop lamp switch (2) is turned ON. ECM detects the state of the brake pedal (3) by this input of two kinds (ON/OFF signal)
Refer to EC-42 for the ASCD function.

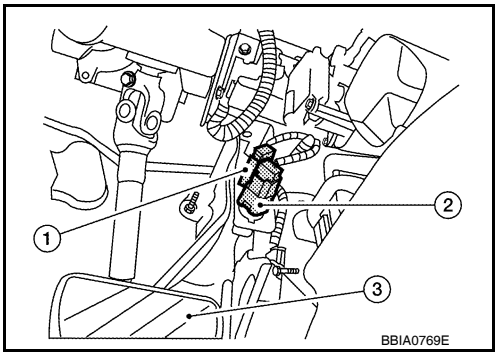

CONSULT-III Reference Value in Data Monitor Mode

INFOID:0000000005285079

Specification data are reference values.

Monitor item	Condition		Specification
BRAKE SW1 (ASCD brake switch)	• Ignition switch: ON	• Brake pedal: Fully released (CVT) • Brake pedal and clutch pedal: Fully released (M/T)	ON
		• Brake pedal: Slightly depressed (CVT) • Brake pedal and/or clutch pedal: Slightly depressed (M/T)	OFF
BRAKE SW2 (Stop lamp switch)	• Ignition switch: ON	Brake pedal: Fully released	OFF
		Brake pedal: Slightly depressed	ON

Wiring Diagram

INFOID:0000000005285080

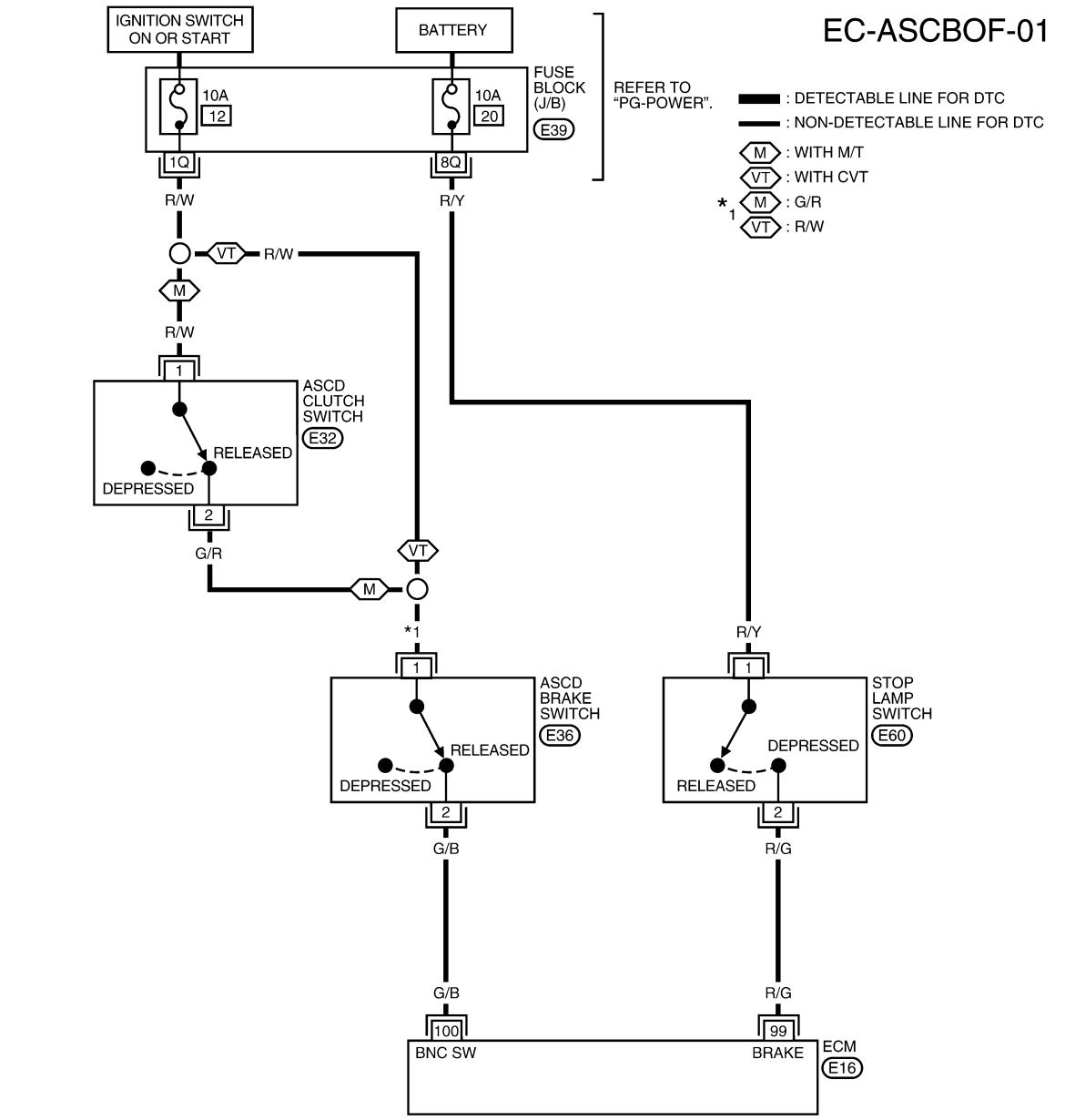

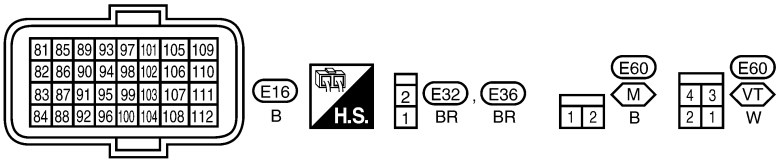

AABWA0300GB

Specification data are reference values and are measured between each terminal and ground.

CAUTION:

Do not use ECM ground terminals when measuring input/output voltage. Doing so may result in damage to the ECM's transistor. Use a ground other than ECM terminals, such as the ground.

TERMINAL NO.	WIRE COLOR	ITEM	CONDITION	DATA (DC Voltage)
99	R/G	Stop lamp switch	**[Ignition switch: ON]** • Brake pedal: Fully released	Approximately 0 V
			[Ignition switch: ON] • Brake pedal: Slightly depressed	BATTERY VOLTAGE (11 - 14 V)
100	G/B	ASCD brake switch	**[Ignition switch: ON]** • Brake pedal: Slightly depressed (CVT) • Brake pedal and/or clutch pedal: Slightly depressed (M/T)	Approximately 0 V
			[Ignition switch: ON] • Brake pedal: Fully released (CVT) • Brake pedal and clutch pedal: Fully released (M/T)	BATTERY VOLTAGE (11 - 14 V)

Diagnosis Procedure

INFOID:0000000005285081

1. CHECK OVERALL FUNCTION-I

With CONSULT-III

1. Turn ignition switch ON.
2. Select “BRAKE SW1” in “DATA MONITOR” mode with CONSULT-III.
3. Check “BRAKE SW1” indication under the following conditions.

M/T models

Condition	Indication
Clutch pedal and/or brake pedal: Slightly depressed	OFF
Clutch pedal and brake pedal: Fully released	ON

CVT models

Condition	Indication
Brake pedal: Slightly depressed	OFF
Brake pedal: Fully released	ON

Without CONSULT-III

1. Turn ignition switch ON.
2. Check voltage between ECM terminal 100 and ground under the following conditions.

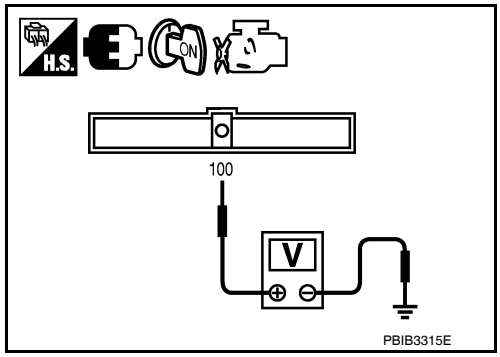

M/T models

Condition	Voltage
Clutch pedal and/or brake pedal: Slightly depressed	Approximately 0 V
Clutch pedal and brake pedal: Fully released	Battery voltage

CVT models

Condition	Voltage
Brake pedal: Slightly depressed	Approximately 0 V
Brake pedal: Fully released	Battery voltage

OK or NG

OK >> GO TO 2.
NG >> GO TO 3.

2. CHECK OVERALL FUNCTION-II

With CONSULT-III

Check “BRAKE SW2” indication in “DATA MONITOR” mode.

Condition	Indication
Brake pedal: Fully released	OFF
Brake pedal: Slightly depressed	ON

Without CONSULT-III

Check voltage between ECM terminal 99 and ground under the following conditions.

Condition	Voltage
Brake pedal: Fully released	Approximately 0 V
Brake pedal: Slightly depressed	Battery voltage

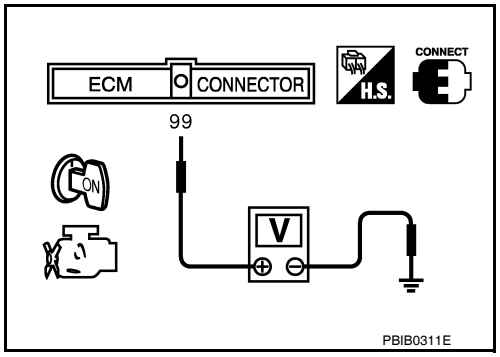

OK or NG

OK >> **INSPECTION END**
NG >> GO TO 11.

3. CHECK ASCD BRAKE SWITCH POWER SUPPLY

1. Turn ignition switch OFF.
2. Disconnect ASCD brake switch (1) harness connector.
- Stop lamp switch (2)
- Brake pedal (3)
3. Turn ignition switch ON.

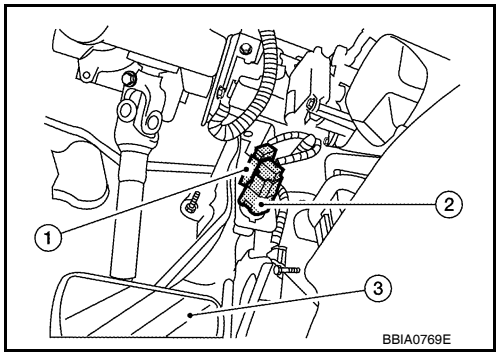

4. Check voltage between ASCD brake switch terminal 1 and ground with CONSULT-III or tester.

Voltage : Battery voltage

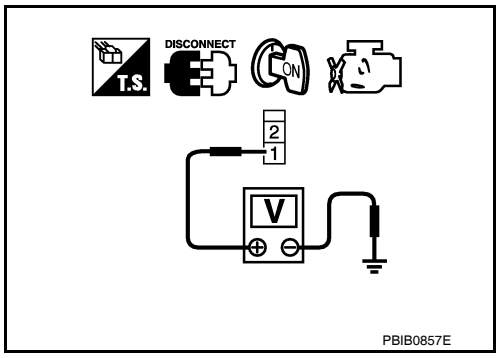

OK or NG

OK >> GO TO 8.
NG (M/T models) >>GO TO 4.
NG (CVT models)>>GO TO 6.

4. CHECK ASCD CLUTCH SWITCH POWER SUPPLY CIRCUIT

1. Turn ignition switch OFF.

2. Disconnect ASCD clutch switch (1) harness connector.
- Clutch pedal (2)
3. Turn ignition switch ON.

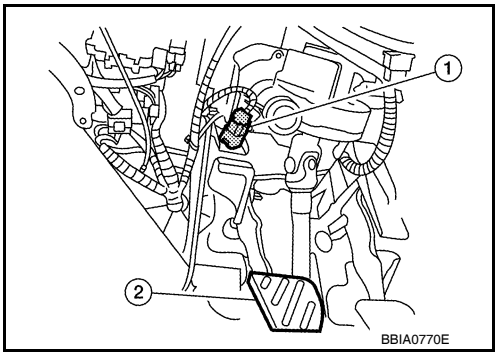

4. Check voltage between ASCD clutch switch terminal 1 and ground with CONSULT-III or tester.

Voltage : Battery voltage

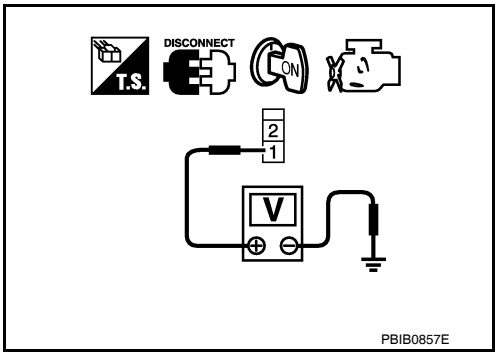

OK or NG

OK >> GO TO 7.
NG >> GO TO 5.

5. DETECT MALFUNCTIONING PART

Check the following.
- 10 A fuse
- Harness for open or short between ASCD clutch switch and fuse

>> Repair open circuit or short to ground or short to power in harness or connectors.

6. DETECT MALFUNCTIONING PART

Check the following.
- 10 A fuse
- Harness for open or short between ASCD brake switch and fuse

>> Repair open circuit or short to ground or short to power in harness or connectors.

7. CHECK ASCD CLUTCH SWITCH INPUT SIGNAL CIRCUIT FOR OPEN AND SHORT

1. Turn ignition switch OFF.
2. Check harness continuity between ASCD brake switch terminal 1 and ASCD clutch switch terminal 2. Refer to Wiring Diagram.

Continuity should exist.

3. Also check harness for short to ground and short to power.

OK or NG

OK >> GO TO 10.
NG >> Repair open circuit or short to ground or short to power in harness or connectors.

8. CHECK ASCD BRAKE SWITCH INPUT SIGNAL CIRCUIT FOR OPEN AND SHORT

1. Turn ignition switch OFF.
2. Disconnect ECM harness connector.
3. Check harness continuity between ECM terminal 100 and ASCD brake switch terminal 2. Refer to Wiring Diagram.

Continuity should exist.

4. Also check harness for short to ground and short to power.

OK or NG

OK >> GO TO 9.
NG >> Repair open circuit or short to ground or short to power in harness or connectors.

9. CHECK ASCD BRAKE SWITCH

Refer to EC-467, "Component Inspection".

OK or NG

OK >> GO TO 15.
NG >> Replace ASCD brake switch.

10. CHECK ASCD CLUTCH SWITCH

Refer to EC-467, "Component Inspection"

OK or NG

OK >> GO TO 15.
NG >> Replace ASCD clutch switch.

11. CHECK STOP LAMP SWITCH POWER SUPPLY CIRCUIT

1. Turn ignition switch OFF.
2. Disconnect stop lamp switch (2) harness connector.
- ASCD brake switch (1)
- Brake pedal (3)

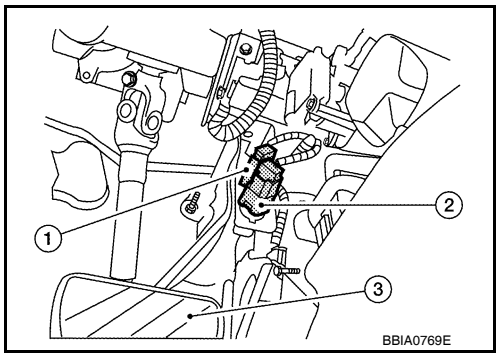

3. Check voltage between stop lamp switch terminal 1 and ground with CONSULT -III or tester.

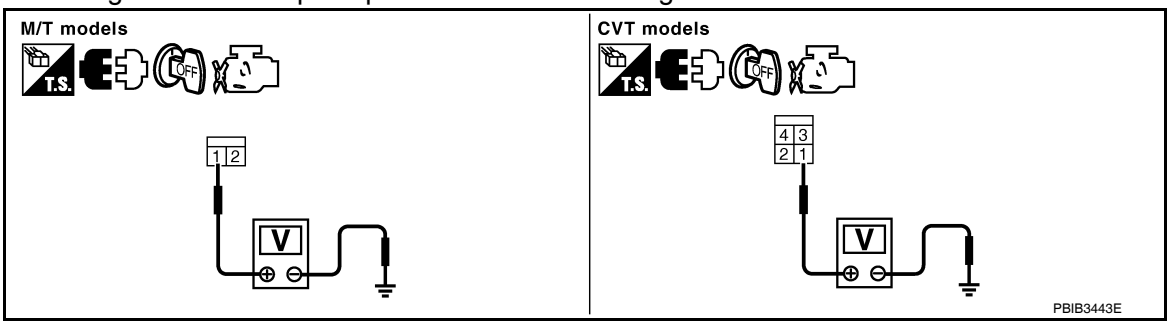

Voltage : Battery voltage

OK or NG

OK >> GO TO 13.
NG >> GO TO 12.

12. DETECT MALFUNCTIONING PART

Check the following.
- 10 A fuse
- Harness for open or short between stop lamp switch and battery

>> Repair open circuit or short to ground or short to power in harness or connectors.

13. CHECK STOP LAMP SWITCH INPUT SIGNAL CIRCUIT FOR OPEN AND SHORT

1. Disconnect ECM harness connector.
2. Check harness continuity between ECM terminal 99 and stop lamp switch terminal 2.
   Refer to Wiring Diagram.

Continuity should exist.

3. Also check harness for short to ground and short to power.

OK or NG

OK >> GO TO 14.
NG >> Repair open circuit or short to ground or short to power in harness or connectors.

14. CHECK STOP LAMP SWITCH

Refer to EC-467, "Component Inspection"

OK or NG

OK >> GO TO 15.
NG >> Replace stop lamp switch.

15. CHECK INTERMITTENT INCIDENT

Refer to EC-152.

>> **INSPECTION END**

Component Inspection

INFOID:0000000005285082

ASCD BRAKE SWITCH

1. Turn ignition switch OFF.
2. Disconnect ASCD brake switch harness connector.
3. Check continuity between ASCD brake switch terminals 1 and 2 under the following conditions.

Condition	Continuity
Brake pedal: Fully released.	Should exist.
Brake pedal: Slightly depressed.	Should not exist.

If NG, adjust ASCD brake switch installation, refer to BR-8, and perform step 3 again.

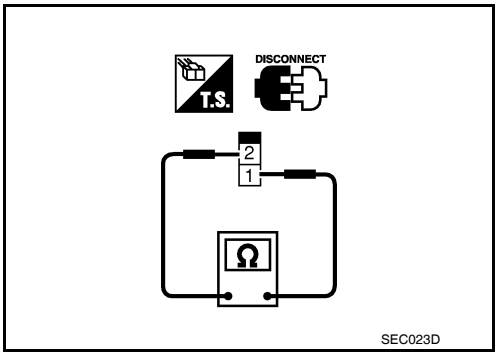

ASCD CLUTCH SWITCH

1. Turn ignition switch OFF.
2. Disconnect ASCD clutch switch harness connector.
3. Check continuity between ASCD clutch switch terminals 1 and 2 under the following conditions.

Condition	Continuity
Clutch pedal: Fully released.	Should exist.
Clutch pedal: Slightly depressed.	Should not exist.

If NG, adjust ASCD clutch switch installation, refer to CL-6, and perform step 3 again.

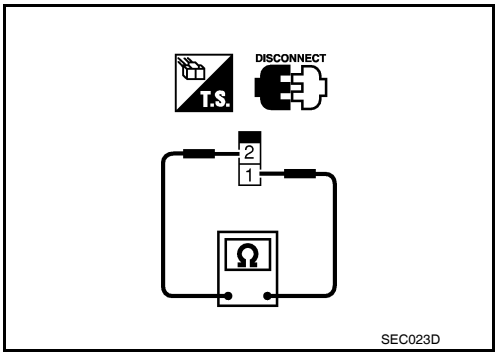

STOP LAMP SWITCH

1. Turn ignition switch OFF.
2. Disconnect stop lamp switch harness connector.

3. Check continuity between stop lamp switch terminals 1 and 2 under the following conditions.

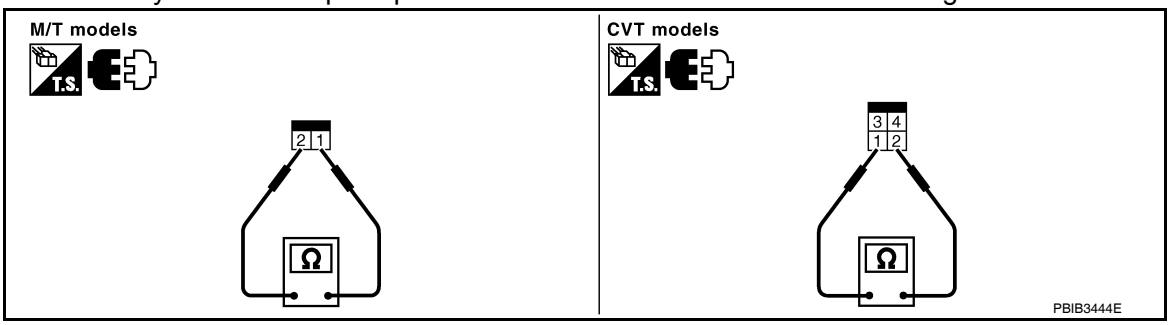

Condition	Continuity
Brake pedal: Fully released.	Should not exist.
Brake pedal: Slightly depressed.	Should exist.

If NG, adjust stop lamp switch installation, refer to BR-8, and perform step 3 again.

ASCD INDICATOR

Component Description

INFOID:0000000005285083

ASCD indicator lamp illuminates to indicate ASCD operation status. Lamp has two indicators, CRUISE and SET, and is integrated in combination meter.
CRUISE indicator illuminates when MAIN switch on ASCD steering switch is turned ON to indicate that ASCD system is ready for operation.
SET indicator illuminates when following conditions are met.
- CRUISE indicator is illuminated.
- SET/COAST switch on ASCD steering switch is turned ON while vehicle speed is within the range of ASCD setting.

SET indicator remains lit during ASCD control.
Refer to EC-42 for the ASCD function.

CONSULT-III Reference Value in Data Monitor Mode

INFOID:0000000005285084

Specification data are reference value.

Monitor item	Condition		Specification
CRUISE LAMP	• Ignition switch: ON	MAIN switch: Pressed at 1st time → 2nd	ON → OFF
SET LAMP	• MAIN switch: ON • Vehicle: Between 40 km/h (25 MPH) and 144 km/h (89 MPH)	ASCD: Operating	ON
		ASCD: Not operating	OFF

Wiring Diagram

INFOID:0000000005285085

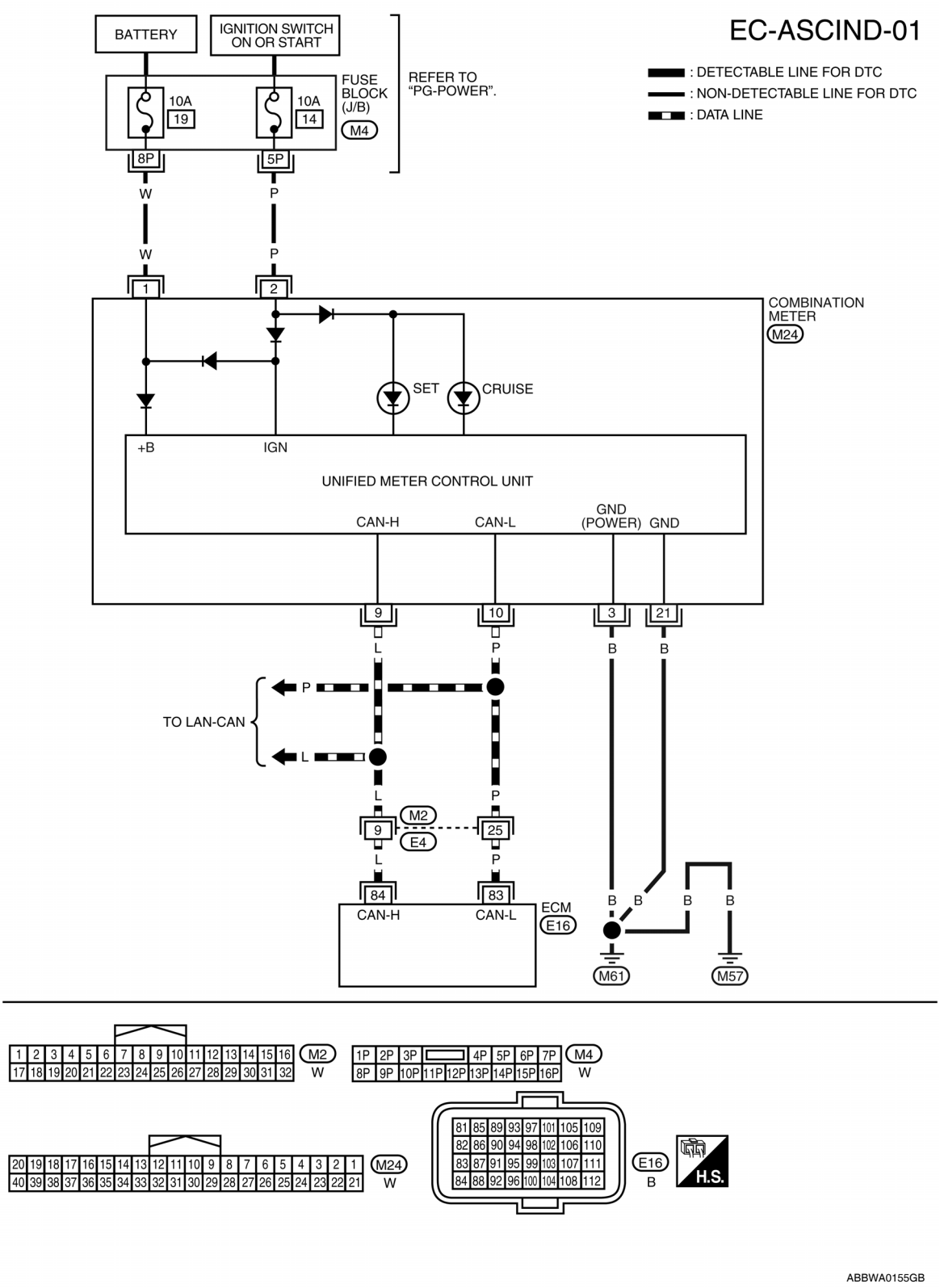

Diagnosis Procedure

INFOID:0000000005285086

1. CHECK OVERALL FUNCTION

Check ASCD indicator under the following conditions.

ASCD indicator	Condition		Specification
CRUISE LAMP	• Ignition switch: ON	MAIN switch: Pressed at 1st time → 2nd	ON → OFF
SET LAMP	• MAIN switch: ON • Vehicle: Between 40 km/h (25 MPH) and 144 km/h (89 MPH)	ASCD: Operating	ON
		ASCD: Not operating	OFF

OK or NG

OK >> **INSPECTION END**
NG >> GO TO 2.

2. CHECK DTC

Check that DTC UXXXX is not displayed.

Yes or No

Yes >> Perform trouble diagnoses for DTC UXXXX.
No >> GO TO 3.

3. CHECK COMBINATION METER OPERATION

Does combination meter operate normally?

Yes or No

Yes >> GO TO 4.
No >> Check combination meter circuit. Refer to DI-6.

4. CHECK INTERMITTENT INCIDENT

Refer to EC-152.

>> **INSPECTION END**

ELECTRICAL LOAD SIGNAL

CONSULT-III Reference Value in Data Monitor Mode

INFOID:0000000005285087

Specification data are reference values.

Monitor item	Condition		Specification
LOAD SIGNAL	• Ignition switch: ON	Rear window defogger switch is ON and/or lighting switch is in 2nd position.	ON
		Rear window defogger switch is OFF and lighting switch is OFF.	OFF
HEATER FAN SW	• Ignition switch: ON	Heater fan: Operating.	ON
		Heater fan: Not operating.	OFF

Diagnosis Procedure

INFOID:0000000005285088

1. CHECK LOAD SIGNAL CIRCUIT OVERALL FUNCTION-I

1. Turn ignition switch ON.
2. Check “LOAD SIGNAL” in “DATA MONITOR” mode with CONSULT-III under the following conditions.

Condition	LOAD SIGNAL
Lighting switch: ON at 2nd position	ON
Lighting switch: OFF	OFF

OK or NG

OK >> GO TO 2.
NG >> GO TO 4.

2. CHECK LOAD SIGNAL CIRCUIT OVERALL FUNCTION-II

Check “LOAD SIGNAL” in “DATA MONITOR” mode with CONSULT-III under the following conditions.

Condition	LOAD SIGNAL
Rear window defogger switch: ON	ON
Rear window defogger switch: OFF	OFF

OK or NG

OK >> GO TO 3.
NG >> GO TO 5.

3. CHECK HEATER FAN SIGNAL CIRCUIT OVERALL FUNCTION

Check “HEATER FAN SW” in “DATA MONITOR” mode with CONSULT-III under the following conditions.

Condition	HEATER FAN SW
Heater fan control switch: ON	ON
Heater fan control switch: OFF	OFF

OK or NG

OK >> **INSPECTION END**.
NG >> GO TO 6.

4. CHECK HEADLAMP SYSTEM

Refer to LT-4 or LT-25.

>> **INSPECTION END**

5. CHECK REAR WINDOW DEFOGGER SYSTEM

Refer to GW-54.

>> **INSPECTION END**

6. CHECK HEATER FAN CONTROL SYSTEM

Refer to MTC-27.

>> **INSPECTION END**

FUEL INJECTOR

Component Description

INFOID:0000000005285089

The fuel injector is a small, precise solenoid valve. When the ECM supplies a ground to the fuel injector circuit, the coil in the fuel injector is energized. The energized coil pulls the ball valve back and allows fuel to flow through the fuel injector into the intake manifold. The amount of fuel injected depends upon the injection pulse duration. Pulse duration is the length of time the fuel injector remains open. The ECM controls the injection pulse duration based on engine fuel needs.

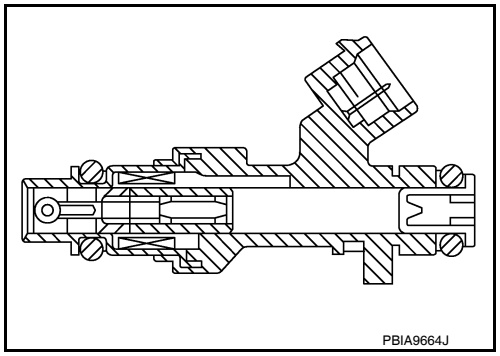

CONSULT-III Reference Value in Data Monitor Mode

INFOID:0000000005285090

Specification data are reference values.

Monitor item	Condition		Specification
B/FUEL SCHDL	See EC-144.		
INJ PULSE-B1	• Engine: After warming up • Air conditioner switch: OFF • Shift lever: P or N (CVT), Neutral (M/T) • No load	Idle	2.0 - 3.0 msec
		2,000 rpm	1.9 - 2.9 msec

Wiring Diagram

INFOID:0000000005285091

EC-INJECT-01

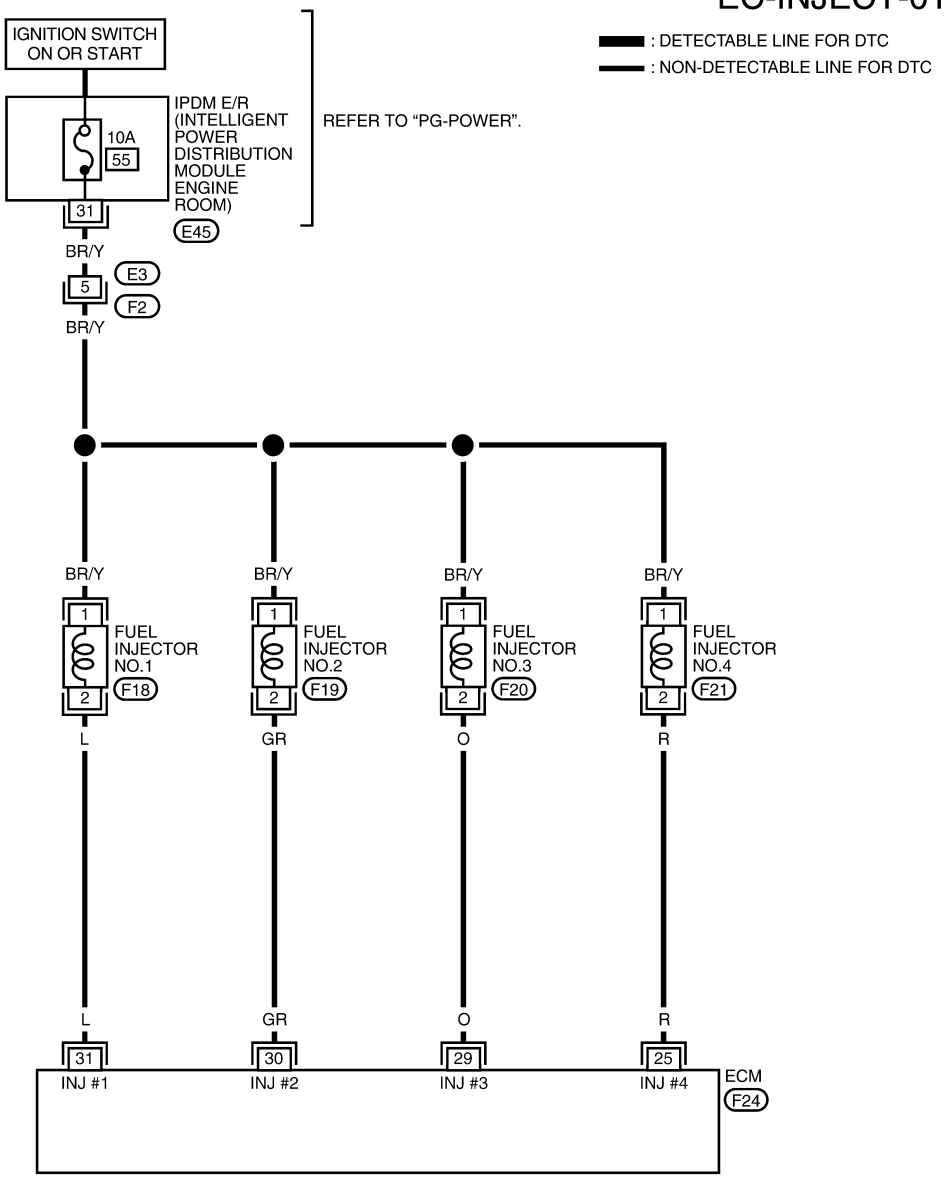

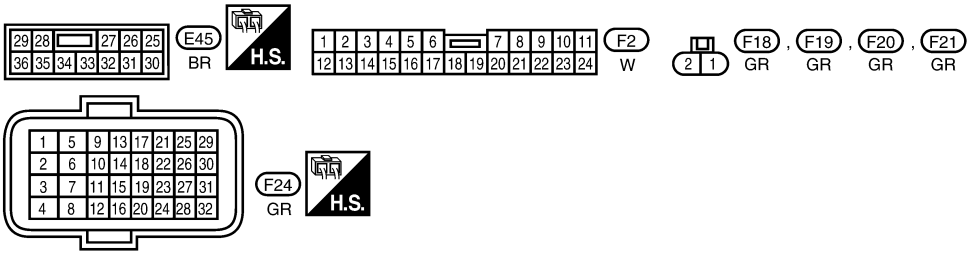

BBWA2907E

Specification data are reference values and are measured between each terminal and ground.
Pulse signal is measured by CONSULT-III.

CAUTION:

Do not use ECM ground terminals when measuring input/output voltage. Doing so may result in damage to the ECM's transistor. Use a ground other than ECM terminals, such as the ground.

TERMINAL NO.	WIRE COLOR	ITEM	CONDITION	DATA (DC Voltage)
25 29 30 31	R O GR L	Fuel injector No. 4 Fuel injector No. 3 Fuel injector No. 2 Fuel injector No. 1	**[Engine is running]** • **Warm-up condition** • Idle speed **NOTE:** The pulse cycle changes depending on rpm at idle	BATTERY VOLTAGE (11 - 14 V)★ 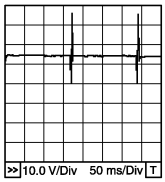 PBIB0529E
			[Engine is running] • **Warm-up condition** • Engine speed: 2,000 rpm	BATTERY VOLTAGE (11 - 14 V)★ 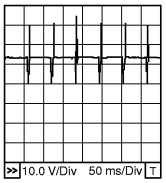 PBIA4943J

★: Average voltage for pulse signal (Actual pulse signal can be confirmed by oscilloscope.)

Diagnosis Procedure

INFOID:0000000005285092

1. INSPECTION START

Turn ignition switch to START.
Is any cylinder ignited?

Yes or No

Yes >> GO TO 2.
No >> GO TO 3.

2. CHECK OVERALL FUNCTION

With CONSULT-III

1. Start engine.
2. Perform “POWER BALANCE” in “ACTIVE TEST” mode with CONSULT-III.
3. Make sure that each circuit produces a momentary engine speed drop.

Without CONSULT-III

1. Start engine.
2. Listen to each fuel injector operating sound.

Clicking noise should be heard.

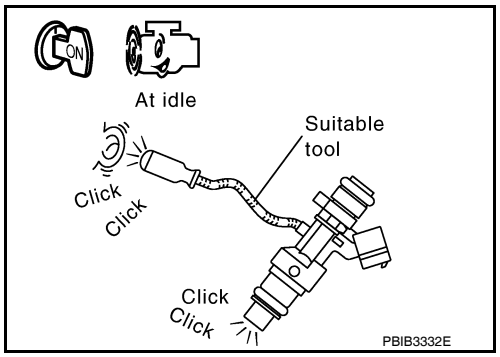

OK or NG

OK >> **INSPECTION END**
NG >> GO TO 3.

3. CHECK FUEL INJECTOR POWER SUPPLY CIRCUIT

1. Turn ignition switch OFF.
2. Disconnect fuel injector (1) harness connector.
3. Turn ignition switch ON.

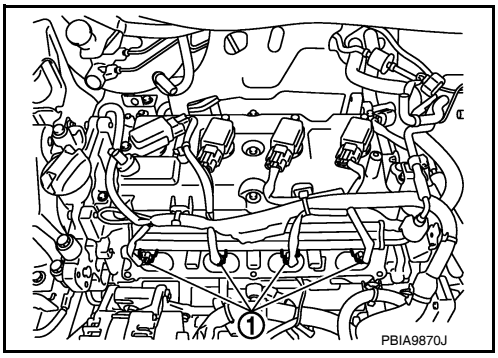

4. Check voltage between fuel injector terminal 1 and ground with CONSULT-III or tester.

Voltage : Battery voltage

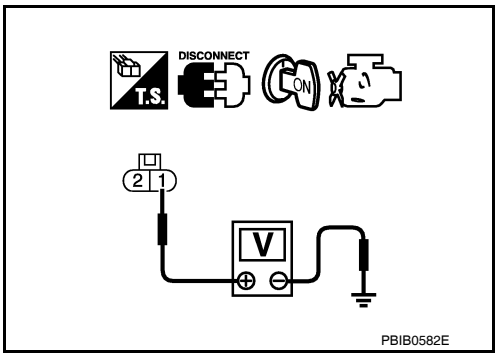

OK or NG

OK >> GO TO 5.
NG >> GO TO 4.

4. DETECT MALFUNCTIONING PART

Check the following.
- Harness connectors E3, F2
- IPDM E/R harness connector E45
- 10 A fuse
- Harness for open or short between fuel injector and fuse

>> Repair open circuit or short to ground or short to power in harness or connectors.

5. CHECK FUEL INJECTOR OUTPUT SIGNAL CIRCUIT FOR OPEN AND SHORT

1. Turn ignition switch OFF.
2. Disconnect ECM harness connector.
3. Check harness continuity between fuel injector terminal 2 and ECM terminals 25, 29, 30, 31. Refer to Wiring Diagram.

Continuity should exist.

4. Also check harness for short to ground and short to power.

OK or NG

OK >> GO TO 6.
NG >> Repair open circuit or short to ground or short to power in harness or connectors.

6. CHECK FUEL INJECTOR

Refer to EC-555, "Component Inspection".

OK or NG

OK >> GO TO 7.
NG >> Replace fuel injector.

7. CHECK INTERMITTENT INCIDENT

Refer to EC-152.

>> **INSPECTION END**

Component Inspection

INFOID:0000000005285093

FUEL INJECTOR

1. Disconnect fuel injector harness connector.
2. Check resistance between terminals as shown in the figure.

Resistance: 11.1 - 14.3 Ω [at 10 - 60°C (50 - 140°F)]

3. If NG, replace fuel injector.

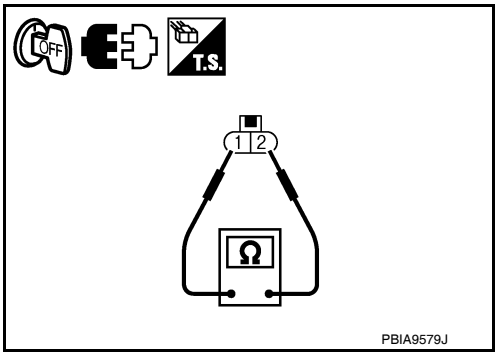

Removal and Installation

INFOID:0000000005285094

FUEL INJECTOR

Refer to EM-36.

FUEL PUMP

Description

INFOID:0000000005285095

SYSTEM DESCRIPTION

Sensor	Input Signal to ECM	ECM Function	Actuator
Crankshaft position sensor (POS) Camshaft position sensor (PHASE)	Engine speed*	Fuel pump control	Fuel pump relay
Battery	Battery voltage*		

*: ECM determines the start signal status by the signals of engine speed and battery voltage.

The ECM activates the fuel pump for several seconds after the ignition switch is turned ON to improve engine start ability. If the ECM receives a engine speed signal from the crankshaft position sensor (POS) and camshaft position sensor (PHASE), it knows that the engine is rotating, and causes the pump to operate. If the engine speed signal is not received when the ignition switch is ON, the engine stalls. The ECM stops pump operation and prevents battery discharging, thereby improving safety. The ECM does not directly drive the fuel pump. It controls the ON/OFF fuel pump relay, which in turn controls the fuel pump.

Condition	Fuel pump operation
Ignition switch is turned to ON	Operates for 1 second
Engine running and cranking	Operates
Engine: Stopped	Stops in 1.5 seconds
Except as shown above	Stops

COMPONENT DESCRIPTION

A turbine type design fuel pump is used in the fuel tank.

- Fuel level sensor unit and fuel pump (1)
- Fuel pressure regulator (2)
- Fuel level sensor (3)
- Fuel tank temperature sensor (4)

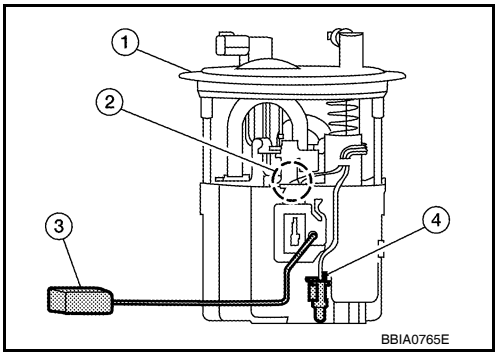

CONSULT-III Reference Value in Data Monitor Mode

INFOID:0000000005285096

Specification data are reference values.

Monitor item	Condition	Specification
FUEL PUMP RLY	• For 1 second after turning ignition switch ON • Engine running or cranking	ON
	• Except above conditions	OFF

Wiring Diagram

INFOID:0000000005285097

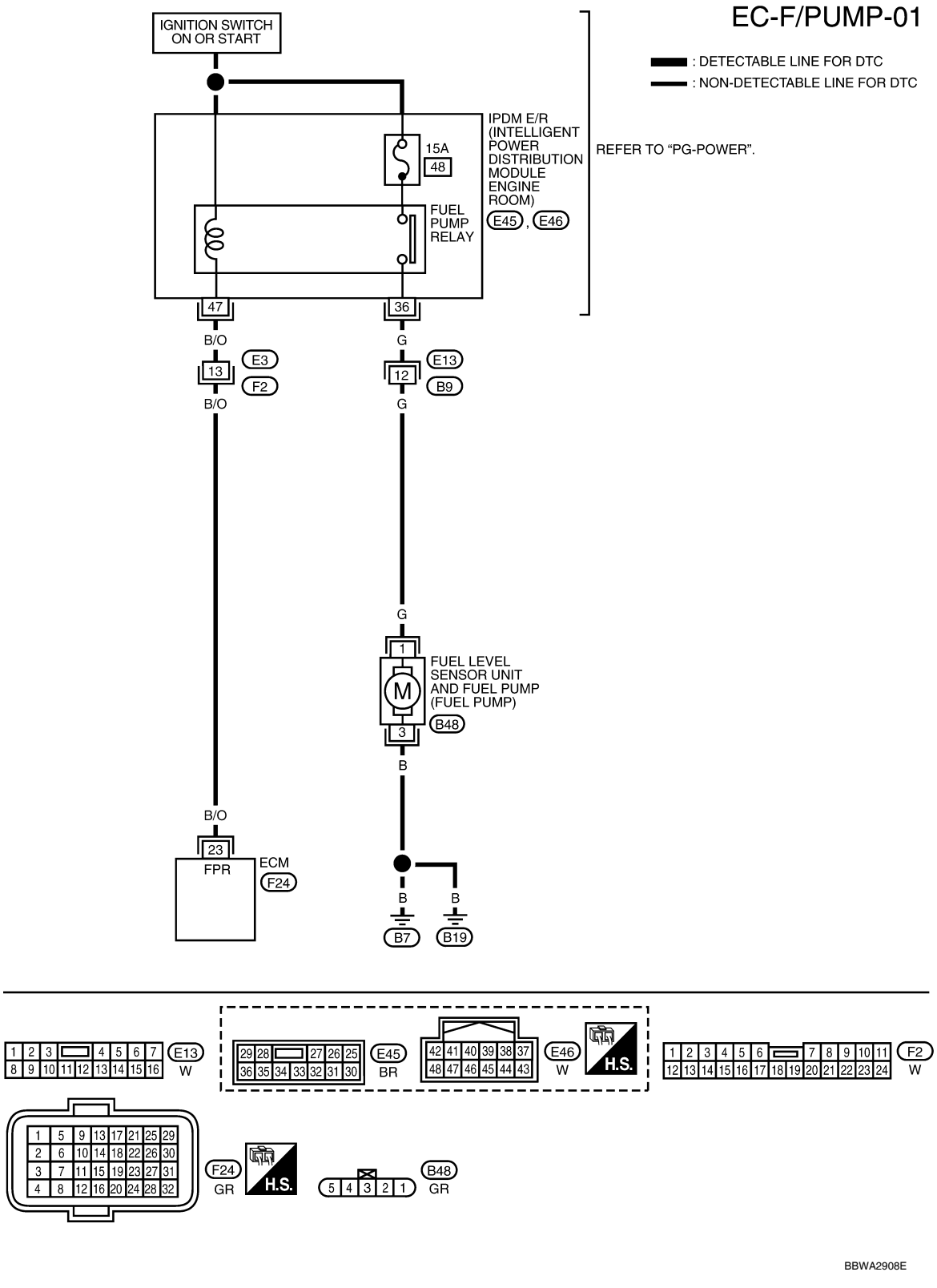

Specification data are reference values and are measured between each terminal and ground.

CAUTION:

Do not use ECM ground terminals when measuring input/output voltage. Doing so may result in damage to the ECM's transistor. Use a ground other than ECM terminals, such as the ground.

TERMINAL NO.	WIRE COLOR	ITEM	CONDITION	DATA (DC Voltage)
23	B/O	Fuel pump relay	**[Ignition switch: ON]** • For 1 second after turning ignition switch ON **[Engine is running]**	0 - 1.0 V
			[Ignition switch: ON] • More than 1 second after turning ignition switch ON	BATTERY VOLTAGE (11 - 14 V)

Diagnosis Procedure

INFOID:0000000005285098

1. CHECK OVERALL FUNCTION

1. Turn ignition switch ON.
2. Pinch fuel feed hose (1) with two fingers.

- This illumination is shows the view with intake air duct removed.

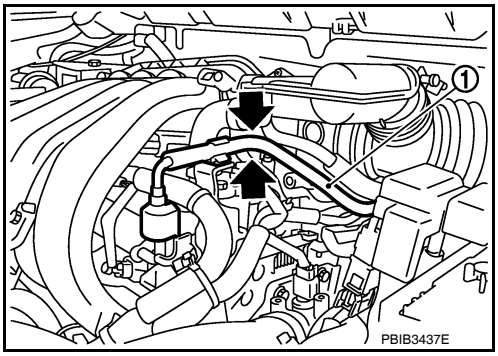

Fuel pressure pulsation should be felt on the fuel feed hose for 1 second after ignition switch is turned ON.

OK or NG

OK >> **INSPECTION END**
NG >> GO TO 2.

2. CHECK FUEL PUMP POWER SUPPLY CIRCUIT-I

1. Turn ignition switch OFF.
2. Disconnect ECM harness connector.
3. Turn ignition switch ON.
4. Check voltage between ECM terminal 23 and ground with CONSULT-III or tester.

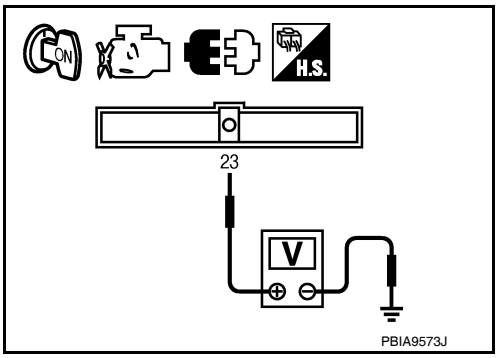

Voltage : Battery voltage

OK or NG

OK >> GO TO 5.
NG >> GO TO 3.

3. CHECK FUEL PUMP POWER SUPPLY CIRCUIT-II

1. Turn ignition switch OFF.
2. Disconnect IPDM E/R harness connector E46.
3. Turn ignition switch ON.
4. Check voltage between IPDM E/R terminal 47 and ground with CONSULT-III or tester.

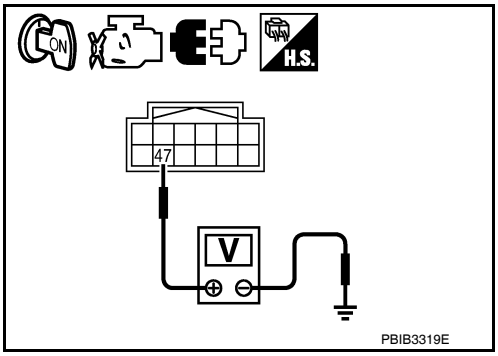

Voltage : Battery voltage

OK or NG

OK >> GO TO 4.
NG >> GO TO 11.

4. DETECT MALFUNCTIONING PART

Check the following.
- Harness connectors E3, F2
- Harness for open or short between IPDM E/R and ECM

>> Repair open circuit or short to ground or short to power in harness or connectors.

5. CHECK FUEL PUMP POWER SUPPLY CIRCUIT-III

1. Turn ignition switch OFF.
2. Reconnect all harness connectors disconnected.
3. Disconnect “fuel level sensor unit and fuel pump” harness connector (1).
- This illumination is shows the view with inspection hole cover removed.
4. Turn ignition switch ON.

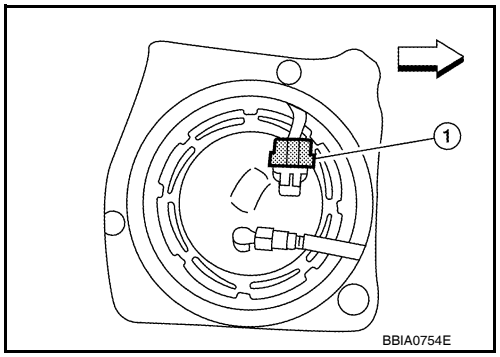

5. Check voltage between “fuel level sensor unit and fuel pump” terminal 1 and ground with CONSULT-III or tester.

Voltage: **Battery voltage should exist for 1 second after ignition switch is turned ON.**

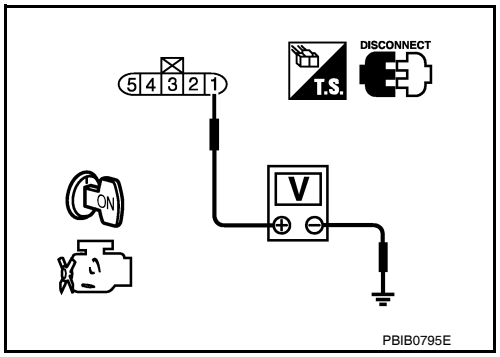

OK or NG

OK >> GO TO 9.
NG >> GO TO 6.

6. CHECK 15A FUSE

1. Turn ignition switch OFF.
2. Disconnect 15 A fuse.
3. Check 15A fuse.

OK or NG

OK >> GO TO 7.
NG >> Replace fuse.

7. CHECK FUEL PUMP POWER SUPPLY CIRCUIT-IV

1. Disconnect IPDM E/R harness connector E45.
2. Check harness continuity between IPDM E/R terminal 36 and “fuel level sensor unit and fuel pump” terminal 1. Refer to Wiring Diagram.

Continuity should exist.

3. Also check harness for short to ground and short to power.

OK or NG

OK >> GO TO 11.
NG >> GO TO 8.

8. DETECT MALFUNCTIONING PART

Check the following.
- Harness connectors E13, B9
- Harness for open or short between IPDM E/R and “fuel level sensor unit and fuel pump”

>> Repair open circuit or short to ground or short to power in harness or connectors.

9. CHECK FUEL PUMP GROUND CIRCUIT

1. Check harness continuity between “fuel level sensor unit and fuel pump” terminal 3 and ground. Refer to Wiring Diagram.

Continuity should exist.

2. Also check harness for short to power.

OK or NG

OK >> GO TO 10.
NG >> Repair or replace harness or connectors.

10. CHECK FUEL PUMP

Refer to EC-560, "Component Inspection".

OK or NG

OK >> GO TO 11.
NG >> Replace fuel pump.

11. CHECK INTERMITTENT INCIDENT

Refer to EC-152.

OK or NG

OK >> Replace IPDM E/R. Refer to PG-17.
NG >> Repair or replace harness or connectors.

Component Inspection

INFOID:0000000005285099

FUEL PUMP

1. Disconnect “fuel level sensor unit and fuel pump” harness connector.
2. Check resistance between “fuel level sensor unit and fuel pump” terminals 1 and 3.

Resistance: Approximately 0.2 - 5.0 Ω [at 25°C (77°F)]

3. If NG, replace “fuel level sensor unit and fuel pump”.

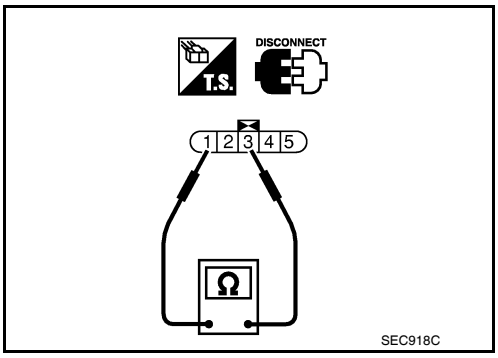

Removal and Installation

INFOID:0000000005285100

FUEL PUMP

Refer to FL-6.

IGNITION SIGNAL

Component Description

INFOID:0000000005285101

IGNITION COIL & POWER TRANSISTOR

The ignition signal from the ECM is sent to and amplified by the power transistor. The power transistor turns ON and OFF the ignition coil (1) primary circuit. This ON/OFF operation induces the proper high voltage in the coil secondary circuit.

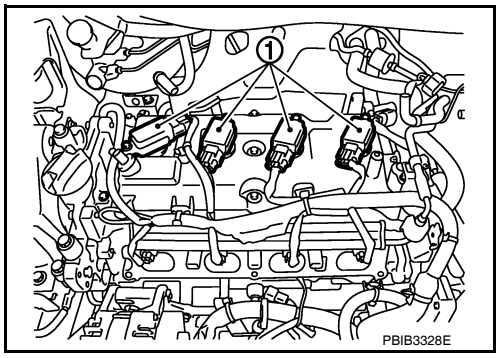

Wiring Diagram

INFOID:0000000005285102

EC-IGNSYS-01

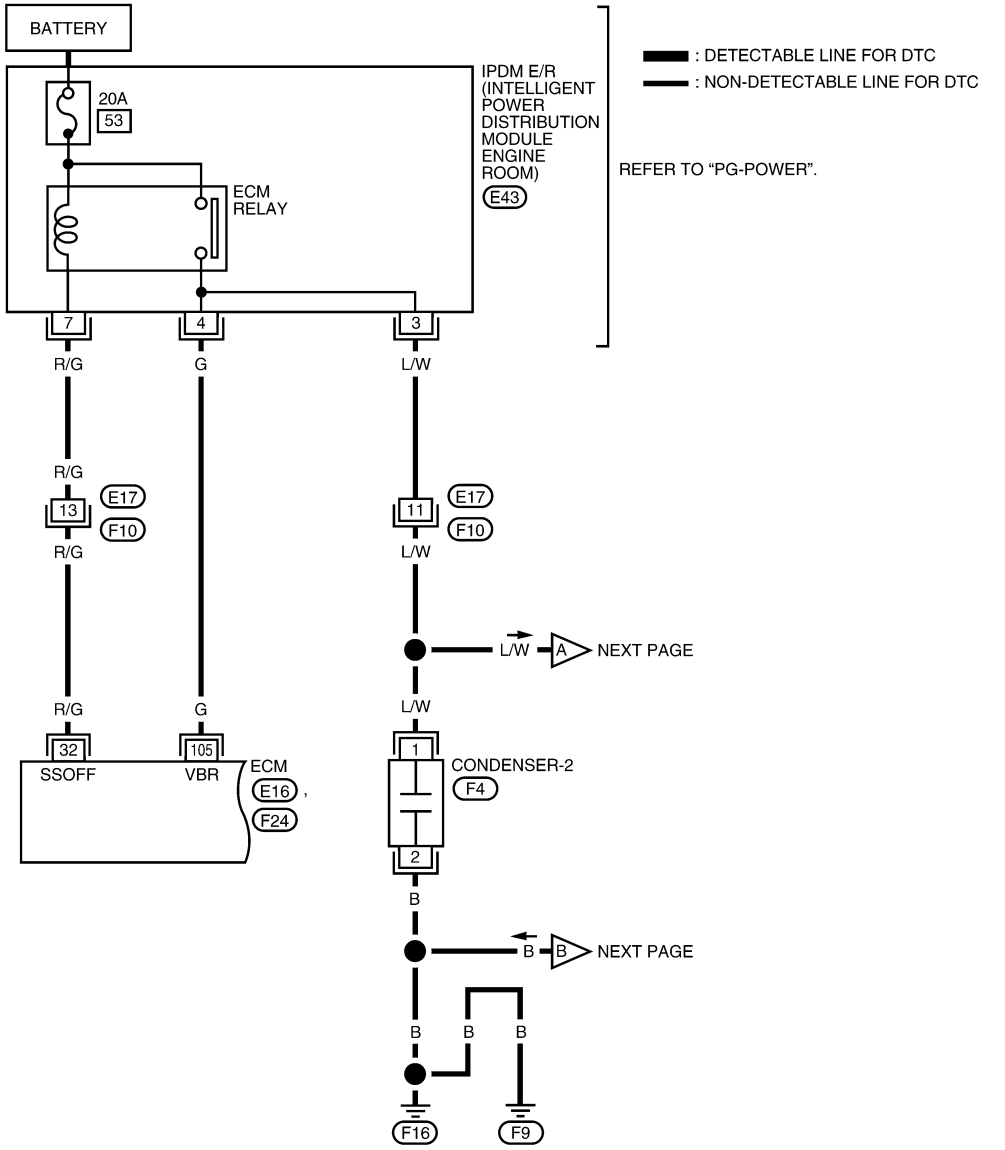

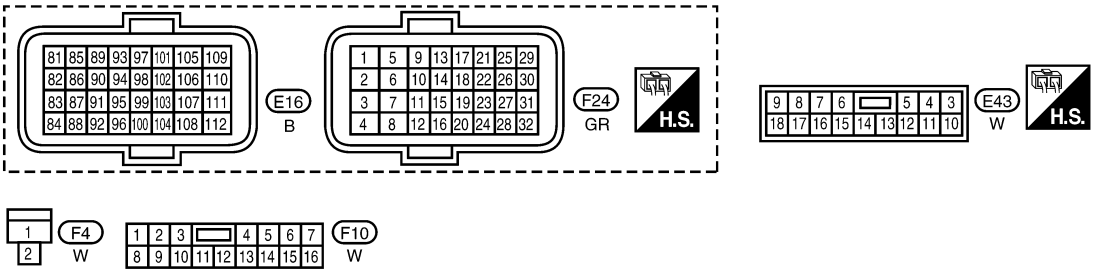

AABWA0298GB

Specification data are reference values and are measured between each terminal and ground.

CAUTION:

Do not use ECM ground terminals when measuring input/output voltage. Doing so may result in damage to the ECM's transistor. Use a ground other than ECM terminals, such as the ground.

TERMINAL NO.	WIRE COLOR	ITEM	CONDITION	DATA (DC Voltage)
32	R/G	ECM relay (Self shut-off)	**[Engine is running]** **[Ignition switch: OFF]** • For a few seconds after turning ignition switch OFF	0 - 1.0 V
			[Ignition switch: OFF] • More than a few seconds after turning ignition switch OFF	BATTERY VOLTAGE (11 - 14 V)
105	G	Power supply for ECM	**[Ignition switch: ON]**	BATTERY VOLTAGE (11 - 14 V)

EC-IGNSYS-02

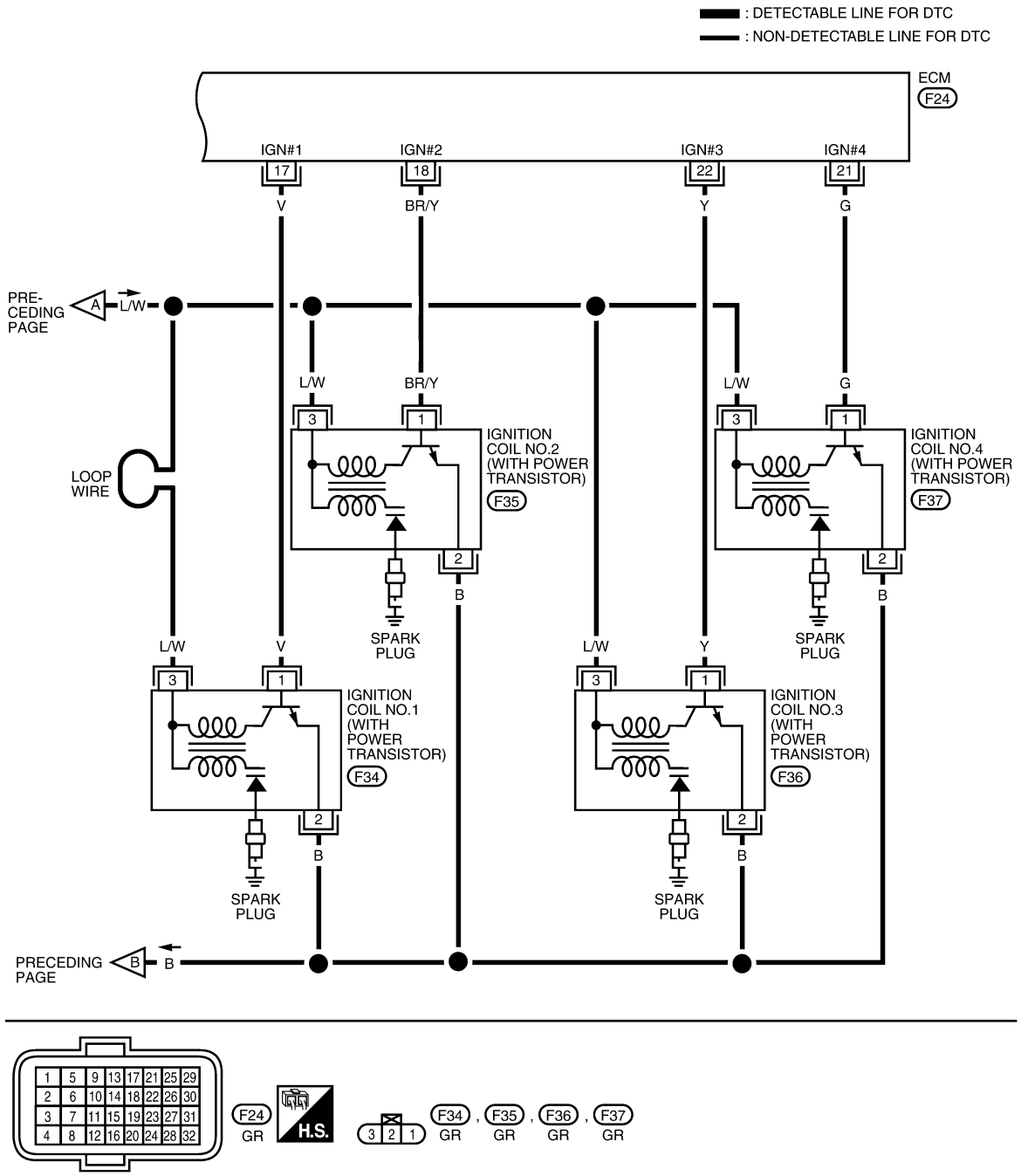

Specification data are reference values and are measured between each terminal and ground.
Pulse signal is measured by CONSULT-III.

CAUTION:

Do not use ECM ground terminals when measuring input/output voltage. Doing so may result in damage to the ECM's transistor. Use a ground other than ECM terminals, such as the ground.

TERMINAL NO.	WIRE COLOR	ITEM	CONDITION	DATA (DC Voltage)
17 18 21 22	V BR/Y G Y	Ignition signal No. 1 Ignition signal No. 2 Ignition signal No. 4 Ignition signal No. 3	**[Engine is running]** • **Warm-up condition** • Idle speed **NOTE:** The pulse cycle changes depending on rpm at idle	0 - 0.3 V★ 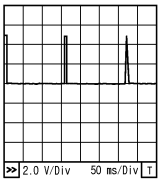 PBIA9265J
			[Engine is running] • **Warm-up condition** • Engine speed: 2,500 rpm	0.2 - 0.5 V★ 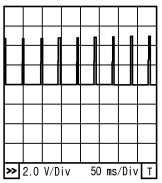 PBIA9266J

★: Average voltage for pulse signal (Actual pulse signal can be confirmed by oscilloscope.)

Diagnosis Procedure

INFOID:0000000005285103

1. CHECK ENGINE START

Turn ignition switch OFF, and restart engine.
Is engine running?

Yes or No

Yes (With CONSULT-III)>>GO TO 2.
Yes (Without CONSULT-III)>>GO TO 3.
No >> GO TO 4.

2. CHECK OVERALL FUNCTION

With CONSULT-III

1. Perform “POWER BALANCE” in “ACTIVE TEST” mode with CONSULT-III.
2. Make sure that each circuit produces a momentary engine speed drop.

OK or NG

OK >> **INSPECTION END**
NG >> GO TO 10.

3. CHECK OVERALL FUNCTION

Without CONSULT-III

1. Let engine idle.
2. Read the voltage signal between ECM terminals 17, 18, 21, 22 and ground with an oscilloscope.
3. Verify that the oscilloscope screen shows the signal wave as shown below.
   NOTE:
   The pulse cycle changes depending on rpm at idle.

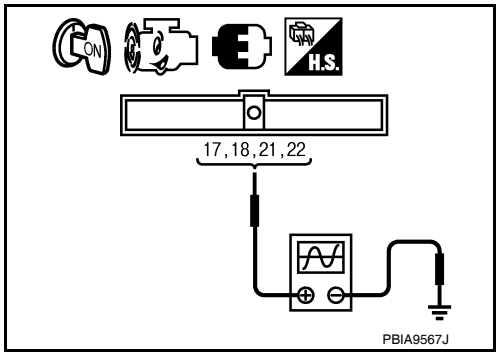

PBIA9567J

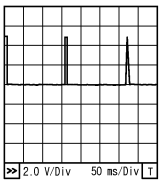

PBIA9265J

OK or NG

OK >> **INSPECTION END**
NG >> GO TO 10.

4. CHECK IGNITION COIL POWER SUPPLY CIRCUIT-I

1. Turn ignition switch OFF, wait at least 10 seconds and then turn ON.
2. Check voltage between ECM terminal 105 and ground with CONSULT-III or tester.

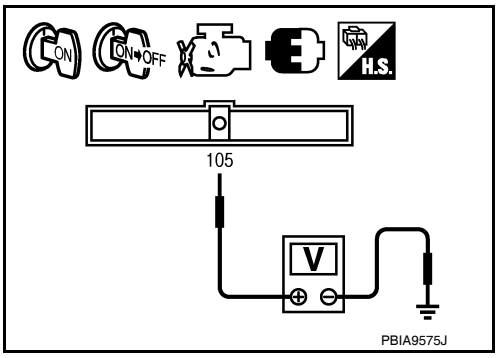

Voltage : Battery voltage

OK or NG

OK >> GO TO 5.
NG >> Go to EC-153.

5. CHECK IGNITION COIL POWER SUPPLY CIRCUIT-II

1. Turn ignition switch OFF.
2. Disconnect condenser-2 (1) harness connector.
3. Turn ignition switch ON.

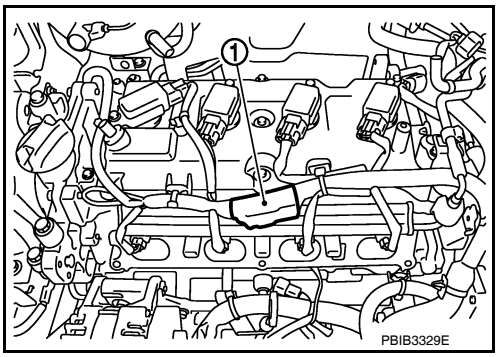

4. Check voltage between condenser-2 terminal 1 and ground with CONSULT-III or tester.

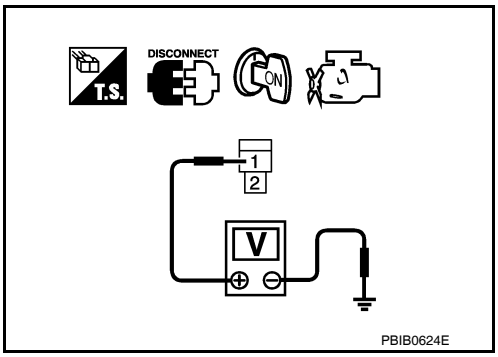

Voltage : Battery voltage

OK or NG

OK >> GO TO 8.
NG >> GO TO 6.

6. CHECK IGNITION COIL POWER SUPPLY CIRCUIT-III

1. Turn ignition switch OFF.
2. Disconnect IPDM E/R harness connector E43.
3. Check harness continuity between IPDM E/R terminal 3 and condenser-2 terminal 1. Refer to Wiring Diagram.

Continuity should exist.

4. Also check harness for short to ground and short to power.

OK or NG

OK >> Go to EC-153.
NG >> GO TO 7.

7. DETECT MALFUNCTIONING PART

Check the following.
- Harness connectors E17, F10

- Harness for open or short between IPDM E/R and condenser-2

>> Repair open circuit or short to ground or short to power in harness or connectors.

8. CHECK CONDENSER-2 GROUND CIRCUIT FOR OPEN AND SHORT

1. Turn ignition switch OFF.
2. Check harness continuity between condenser-2 terminal 2 and ground.
   Refer to Wiring Diagram.

Continuity should exist.

3. Also check harness for short to power.

OK or NG

OK >> GO TO 9.
NG >> Repair open circuit or short to power in harness or connectors.

9. CHECK CONDENSER-2

Refer to EC-568, "Component Inspection"

OK or NG

OK >> GO TO 10.
NG >> Replace condenser-2.

10. CHECK IGNITION COIL POWER SUPPLY CIRCUIT-IV

1. Turn ignition switch OFF.
2. Reconnect all harness connectors disconnected.
3. Disconnect ignition coil (1) harness connector.
4. Turn ignition switch ON.

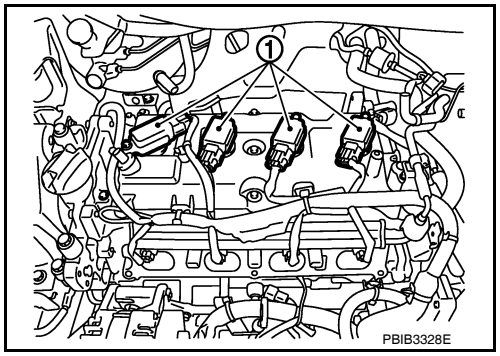

5. Check voltage between ignition coil terminal 3 and ground with CONSULT-III or tester.

Voltage : Battery voltage

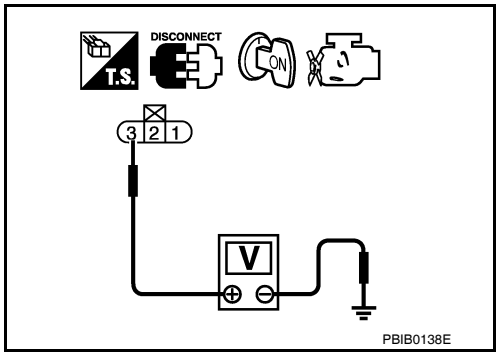

OK or NG

OK >> GO TO 12.
NG >> GO TO 11.

11. DETECT MALFUNCTIONING PART

Check the following.
- Harness connector F10
- Harness for open or short between ignition coil and harness connector F10

>> Repair or replace harness or connectors.

12. CHECK IGNITION COIL GROUND CIRCUIT FOR OPEN AND SHORT

1. Turn ignition switch OFF.

2. Check harness continuity between ignition coil terminal 2 and ground.
   Refer to Wiring Diagram.

   Continuity should exist.

3. Also check harness for short to power.

OK or NG

OK >> GO TO 13.
NG >> Repair open circuit or short to power in harness or connectors.

13. CHECK IGNITION COIL OUTPUT SIGNAL CIRCUIT FOR OPEN AND SHORT

1. Disconnect ECM harness connector.
2. Check harness continuity between ECM terminals 17, 18, 21, 22 and ignition coil terminal 1.
   Refer to Wiring Diagram.

   Continuity should exist.

3. Also check harness for short to ground and short to power.

OK or NG

OK >> GO TO 14.
NG >> Repair open circuit or short to ground or short to power in harness or connectors.

14. CHECK IGNITION COIL WITH POWER TRANSISTOR

Refer to EC-568, "Component Inspection".

OK or NG

OK >> GO TO 15.
NG >> Replace ignition coil with power transistor.

15. CHECK INTERMITTENT INCIDENT

Refer to EC-152.

>> **INSPECTION END**

Component Inspection

INFOID:0000000005285104

IGNITION COIL WITH POWER TRANSISTOR

CAUTION:

Do the following procedure in the place where ventilation is good without the combustible.

1. Turn ignition switch OFF.
2. Disconnect ignition coil harness connector.
3. Check resistance between ignition coil terminals as follows.

Terminal No. (Polarity)	Resistance [at 25°C (77°F)]
1 and 2	Except 0 or ∞ Ω
1 and 3	Except 0 Ω
2 and 3	

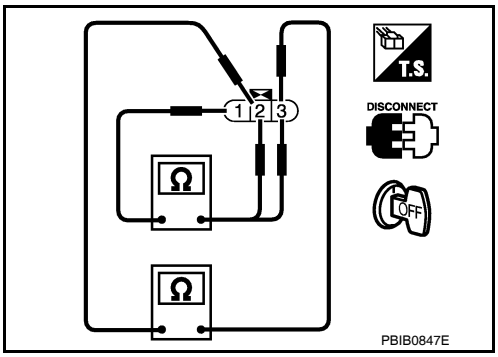

4. If NG, replace ignition coil with power transistor.
   If OK, go to next step.
5. Turn ignition switch OFF.
6. Reconnect all harness connectors disconnected.

7. Remove fuel pump fuse (1) in IPDM E/R (2) to release fuel pressure.
   NOTE:
   Do not use CONSULT-III to release fuel pressure, or fuel pressure applies again during the following procedure.
- ⇦ : Vehicle front
8. Start engine.
9. After engine stalls, crank it two or three times to release all fuel pressure.
10. Turn ignition switch OFF.
11. Remove all ignition coil harness connectors to avoid the electrical discharge from the ignition coils.

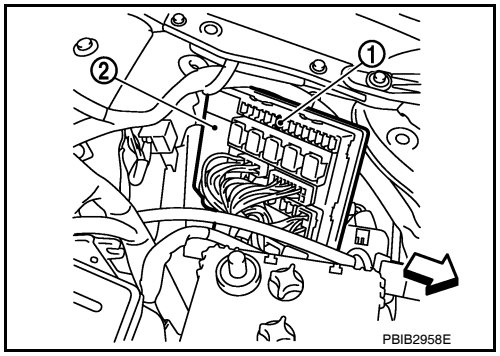

12. Remove ignition coil and spark plug of the cylinder to be checked.
13. Crank engine for 5 seconds or more to remove combustion gas in the cylinder.
14. Connect spark plug and harness connector to ignition coil.
15. Fix ignition coil using a rope etc. with gap of 13 – 17 mm (0.52 – 0.66 in) between the edge of the spark plug and grounded metal portion as shown in the figure.
16. Crank engine for about 3 seconds, and check whether spark is generated between the spark plug and the grounded metal portion.

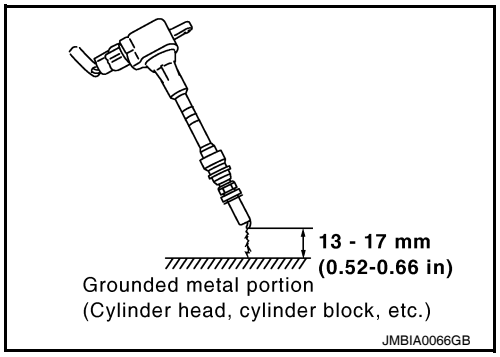

Spark should be generated.

CAUTION:
- **Do not approach to the spark plug and the ignition coil within 50 cm. Be careful not to get an electrical shock while checking, because the electrical discharge voltage becomes 20 kV or more.**
- **It might cause to damage the ignition coil if the gap of more than 17 mm (0.66 in) is taken.**

NOTE:
When the gap is less than 13 mm (0.52 in), the spark might be generated even if the coil is malfunctioning.

17. If NG, replace ignition coil with power transistor.

CONDENSER-2

1. Turn ignition switch OFF.
2. Disconnect condenser-2 harness connector.
3. Check resistance between condenser-2 terminals 1 and 2.

Resistance: Above 1 MΩ [at 25°C (77°F)]

4. If NG, replace condenser-2.

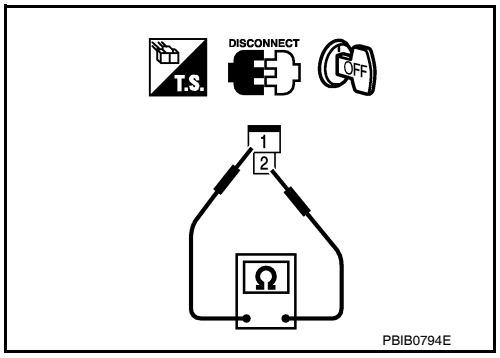

Removal and Installation

INFOID:0000000005285105

IGNITION COIL WITH POWER TRANSISTOR

Refer to EM-33.

REFRIGERANT PRESSURE SENSOR

Component Description

INFOID:0000000005285106

The refrigerant pressure sensor (1) is installed at the condenser of the air conditioner system. The sensor uses an electrostatic volume pressure transducer to convert refrigerant pressure to voltage. The voltage signal is sent to ECM, and ECM controls cooling fan system.

- ⇦: Vehicle front

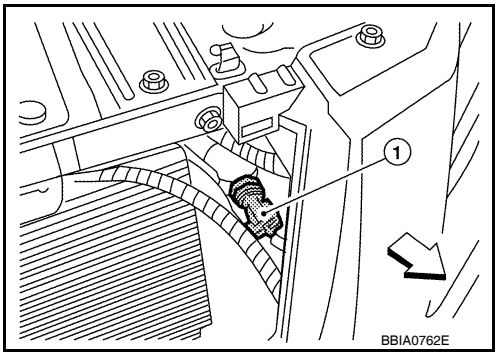

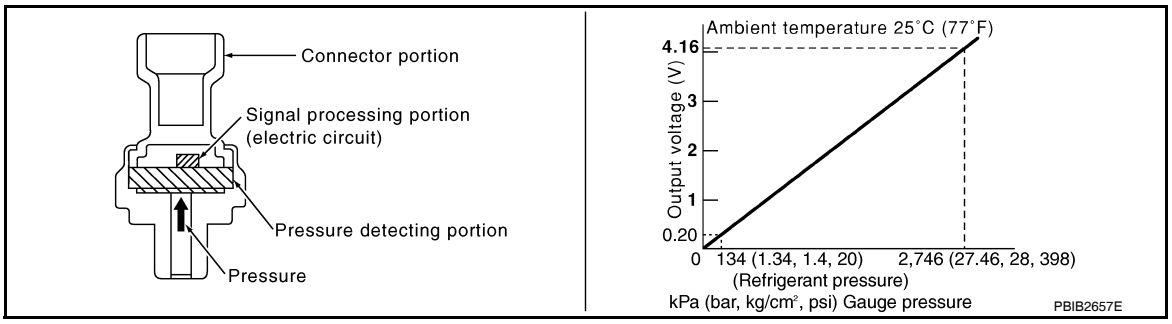

Wiring Diagram

INFOID:0000000005285107

EC-RP/SEN-01

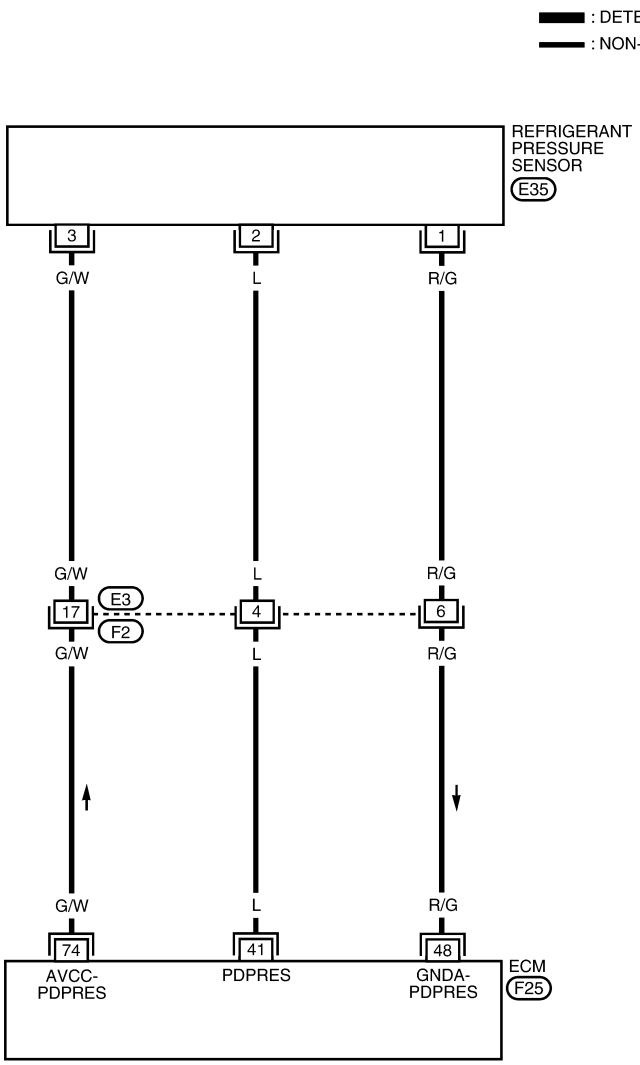

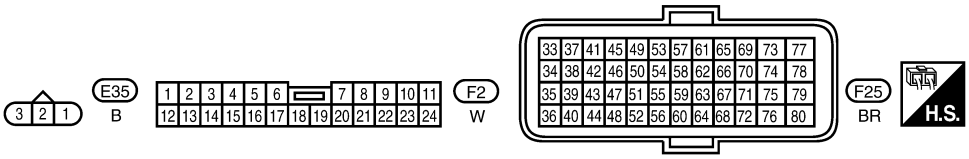

BBWA2911E

Specification data are reference values and are measured between each terminal and ground.

CAUTION:

Do not use ECM ground terminals when measuring input/output voltage. Doing so may result in damage to the ECM's transistor. Use a ground other than ECM terminals, such as the ground.

TERMINAL NO.	WIRE COLOR	ITEM	CONDITION	DATA (DC Voltage)
41	L	Refrigerant pressure sensor	**[Engine is running]** • **Warm-up condition** • Both A/C switch and blower fan switch: ON (Compressor operates)	1.0 - 4.0 V
48	R/G	Sensor ground (Refrigerant pressure sensor)	**[Engine is running]** • **Warm-up condition** • Idle speed	Approximately 0 V
74	G/W	Sensor power supply (Refrigerant pressure sensor)	**[Ignition switch: ON]**	Approximately 5 V

Diagnosis Procedure

INFOID:0000000005285108

1. CHECK REFRIGERANT PRESSURE SENSOR OVERALL FUNCTION

1. Start engine and warm it up to normal operating temperature.
2. Turn A/C switch and blower fan switch ON.
3. Check voltage between ECM terminal 41 and ground with CONSULT-III or tester.

Voltage : 1.0 - 4.0 V

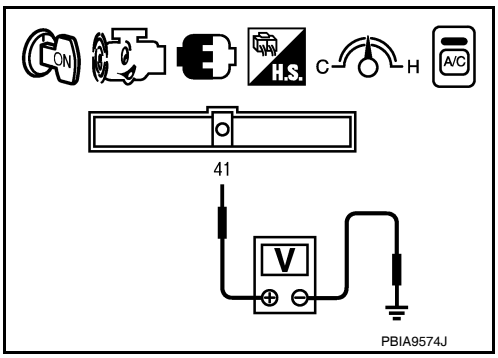

OK or NG

OK >> **INSPECTION END**
NG >> GO TO 2.

2. CHECK GROUND CONNECTIONS

1. Turn A/C switch and blower fan switch OFF.
2. Stop engine and turn ignition switch OFF.
3. Loosen and retighten ground screws on the body. Refer to EC-157, "Ground Inspection".

- ⇦ : Vehicle front
- Body ground (1)

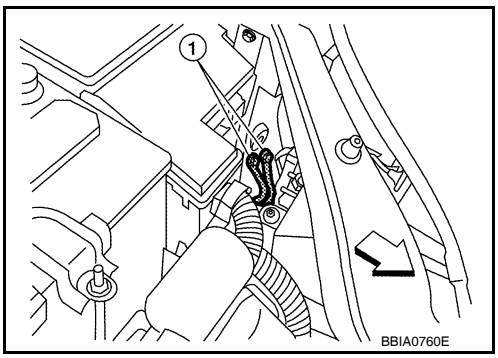

OK or NG

OK >> GO TO 3.
NG >> Repair or replace ground connections.

3. CHECK REFRIGERANT PRESSURE SENSOR POWER SUPPLY CIRCUIT

1. Disconnect refrigerant pressure sensor (1) harness connector.

- ⇦: Vehicle front

2. Turn ignition switch ON.

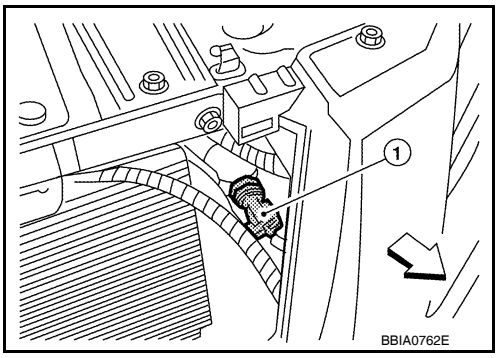

3. Check voltage between refrigerant pressure sensor terminal 3 and ground with CONSULT-III or tester.

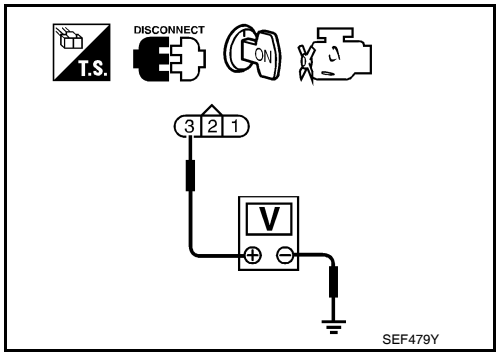

Voltage : Approximately 5 V

OK or NG

OK >> GO TO 5.
NG >> GO TO 4.

4. DETECT MALFUNCTIONING PART

Check the following.
- Harness connectors E3, F2
- Harness for open or short between refrigerant pressure sensor and ECM

>> Repair open circuit or short to ground or short to power in harness or connectors.

5. CHECK REFRIGERANT PRESSURE SENSOR GROUND CIRCUIT FOR OPEN AND SHORT

1. Turn ignition switch OFF.
2. Disconnect ECM harness connector.
3. Check harness continuity between refrigerant pressure sensor terminal 1 and ECM terminal 48. Refer to Wiring Diagram.

Continuity should exist.

4. Also check harness for short to ground and short to power.

OK or NG

OK >> GO TO 7.
NG >> GO TO 6.

6. DETECT MALFUNCTIONING PART

Check the following.
- Harness connectors E3, F2
- Harness for open or short between refrigerant pressure sensor and ECM

>> Repair open circuit or short to ground or short to power in harness or connectors.

7. CHECK REFRIGERANT PRESSURE SENSOR INPUT SIGNAL CIRCUIT FOR OPEN AND SHORT

1. Check harness continuity between refrigerant pressure sensor terminal 2 and ECM terminal 41. Refer to Wiring Diagram.

Continuity should exist.

2. Also check harness for short to ground and short to power.

OK or NG

OK >> GO TO 9.
NG >> GO TO 8.

8. DETECT MALFUNCTIONING PART

Check the following.
- Harness connectors E3, F2
- Harness for open or short between refrigerant pressure sensor and ECM

>> Repair open circuit or short to ground or short to power in harness or connectors.

9. CHECK INTERMITTENT INCIDENT

Refer to EC-152.

OK or NG

OK >> Replace refrigerant pressure sensor.
NG >> Repair or replace.

Removal and Installation

INFOID:0000000005285109

REFRIGERANT PRESSURE SENSOR

Refer to MTC-88, "Removal and Installation for Refrigerant Pressure Sensor".

MIL AND DATA LINK CONNECTOR

Wiring Diagram

INFOID:0000000005285110

EC-MIL/DL-01

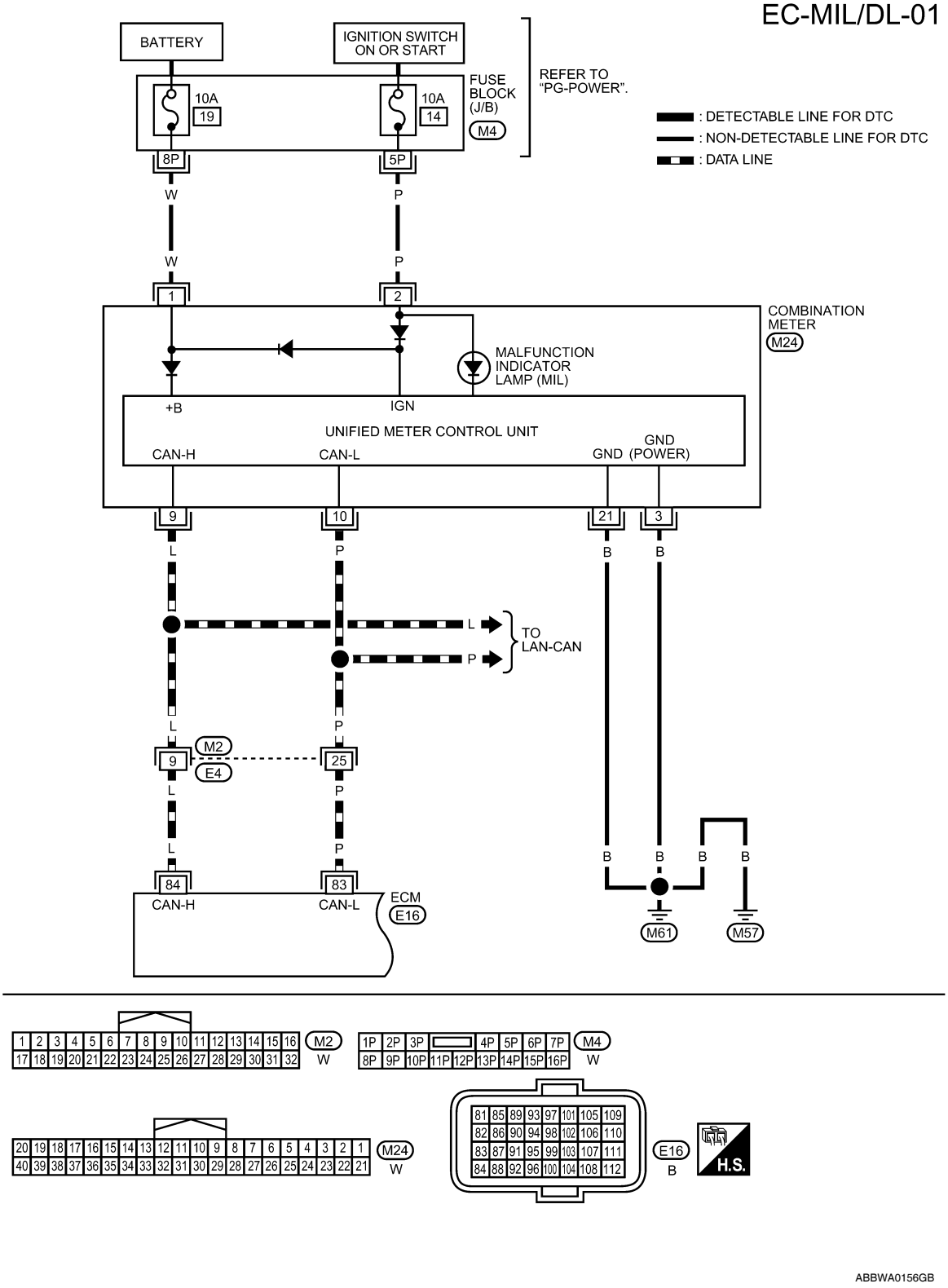

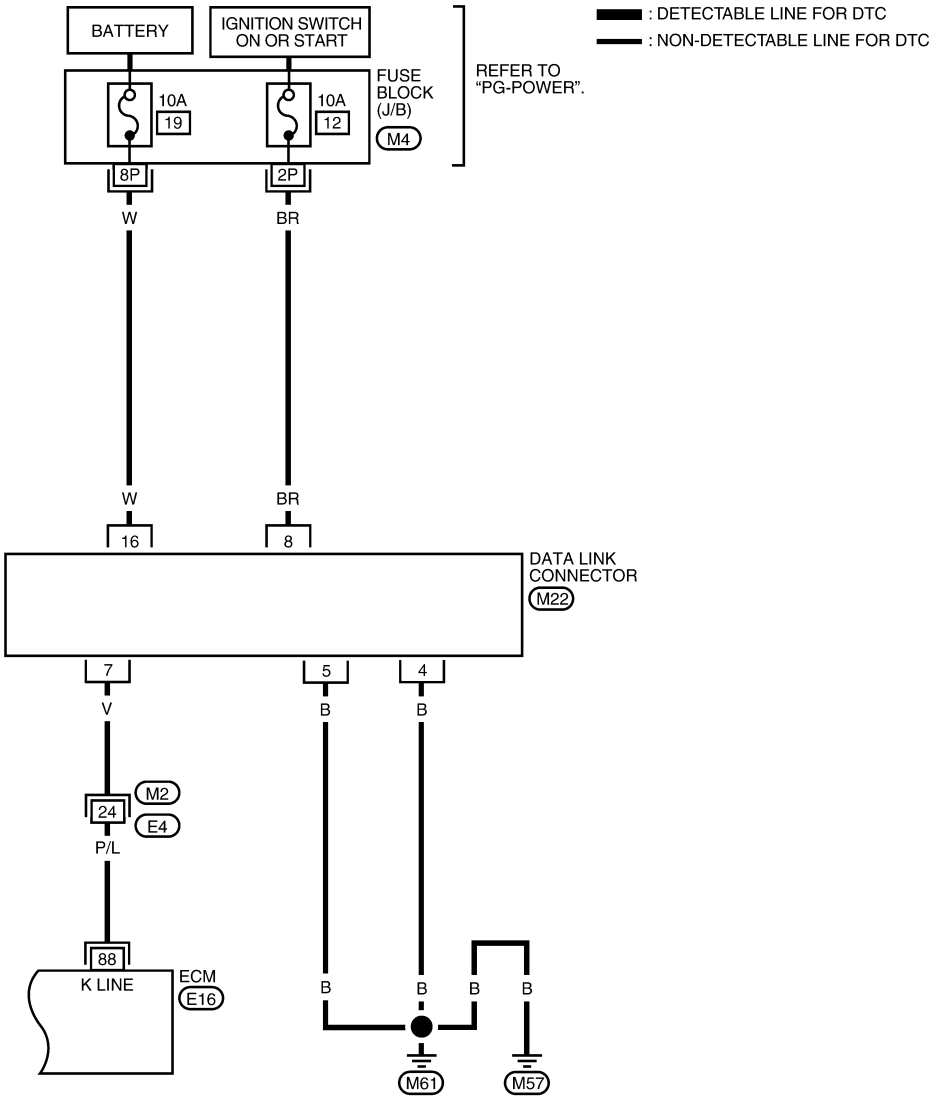
: DETECTABLE LINE FOR DTC
: NON-DETECTABLE LINE FOR DTC
BATTERY
IGNITION SWITCH ON OR START
FUSE BLOCK (J/B)
M4
REFER TO "PG-POWER".
10A
19
10A
12
8P
2P
W
BR
W
BR
16
8
DATA LINK CONNECTOR
M22
7
5
4
V
B
B
M2
24
E4
P/L
88
K LINE
ECM
E16
B
B
B
B
M61
M57

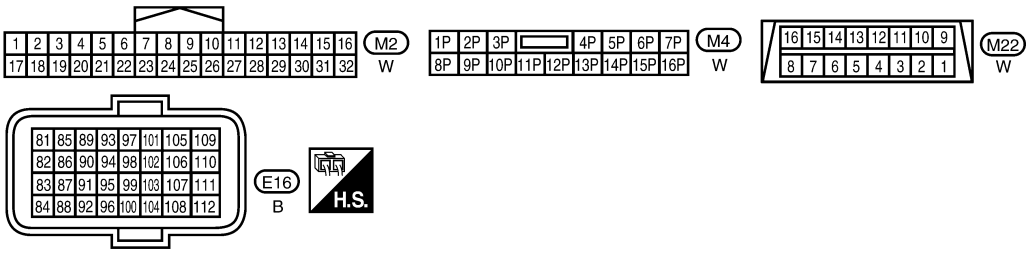
M2
W
M4
W
M22
W
E16
B
H.S.

BBWA2913E

SERVICE DATA AND SPECIFICATIONS (SDS)

Fuel Pressure

INFOID:0000000005285111

Fuel pressure at idle	Approximately 350 kPa (3.57 kg/cm^2, 51 psi)

Idle Speed and Ignition Timing

INFOID:0000000005285112

Target idle speed	CVT	No load*1 (In P or N position)	700 ± 50 rpm
	M/T	No load*1 (in Neutral position)	675 ± 50 rpm
Air conditioner: ON	CVT	In P or N position	800 rpm or more
	M/T	In Neutral position	
Ignition timing	CVT	In P or N position	6 ± 5° BTDC
	M/T	In Neutral position	

*1: Under the following conditions:

- Air conditioner switch: OFF
- Electric load: OFF (Lights, heater fan & rear window defogger)
- Steering wheel: Kept in straight-ahead position

Calculated Load Value

INFOID:0000000005285113

	Calculated load value (Using CONSULT-III or GST)
At idle	10 - 35 %
At 2,500 rpm	10 - 35 %

Mass Air Flow Sensor

INFOID:0000000005285114

Supply voltage	Battery voltage (11 - 14 V)
Output voltage at idle	0.9 - 1.2* V
Mass air flow (Using CONSULT-III or GST)	1.0 - 4.0 g·m/sec at idle* 2.0 - 10.0 g·m/sec at 2,500 rpm*

*: Engine is warmed up to normal operating temperature and running under no load.

Intake Air Temperature Sensor

INFOID:0000000005285115

Temperature [°C (°F)]	Resistance (kΩ)
25 (77)	1.800 - 2.200

Engine Coolant Temperature Sensor

INFOID:0000000005285116

Temperature [°C (°F)]	Resistance (kΩ)
20 (68)	2.37 - 2.63
50 (122)	0.68 - 1.00
90 (194)	0.236 - 0.260

Air Fuel Ratio (A/F) Sensor 1 Heater

INFOID:0000000005285117

Resistance [at 25°C (77°F)]	1.8 - 2.44 Ω

Heated Oxygen sensor 2 Heater

INFOID:0000000005285118

Resistance [at 25°C (77°F)]	3.4 - 4.4 Ω

Crankshaft Position Sensor (POS)

INFOID:0000000005285119

Refer to EC-323, "Component Inspection".

Camshaft Position Sensor (PHASE)

INFOID:0000000005285120

Refer to EC-328, "Component Inspection".

Throttle Control Motor

INFOID:0000000005285121

Resistance [at 25°C (77°F)]	Approximately 1 - 15 Ω

Fuel Injector

INFOID:0000000005285122

Resistance [at 10 - 60°C (50 - 140°F)]	11.1 - 14.3 Ω

Fuel Pump

INFOID:0000000005285123

Resistance [at 25°C (77°F)]	Approximately 0.2 - 5.0 Ω

SERVICE INFORMATION

INDEX FOR DTC

U0101-U1001

INFOID:0000000005285124

DTC*1		Items (CONSULT-III screen terms)	Reference page
CONSULT-III GST*2	ECM*3		
U0101	0101*4	LOST COMM (TCM)	EC-713
U0140	0140*4	LOST COMM (BCM)	EC-715
U1001	1001*4	CAN COMM CIRCUIT	EC-717

*1: 1st trip DTC No. is the same as DTC No.
*2: This number is prescribed by SAE J2012/ISO 15031-6.
*3: In Diagnostic Test Mode II (Self-diagnostic results), this number is controlled by NISSAN.
*4: The troubleshooting for this DTC needs CONSULT-III.

P0011-P0075

INFOID:0000000005285125

DTC*1		Items (CONSULT-III screen terms)	Reference page
CONSULT-III GST*2	ECM*3		
P0011	0011	INT/V TIM CONT-B1	EC-719
P0031	0031	A/F SEN1 HTR (B1)	EC-723
P0032	0032	A/F SEN1 HTR (B1)	EC-723
P0037	0037	HO2S2 HTR (B1)	EC-728
P0038	0038	HO2S2 HTR (B1)	EC-728
P0075	0075	INT/V TIM V/CIR-B1	EC-734

*1: 1st trip DTC No. is the same as DTC No.
*2: This number is prescribed by SAE J2012/ISO 15031-6.
*3: In Diagnostic Test Mode II (Self-diagnostic results), this number is controlled by NISSAN.

P0101-P0128

INFOID:0000000005285126

DTC*1		Items (CONSULT-III screen terms)	Reference page
CONSULT-III GST*2	ECM*3		
P0101	0101	MAF SEN/CIRCUIT-B1	EC-739
P0102	0102	MAF SEN/CIRCUIT-B1	EC-747
P0103	0103	MAF SEN/CIRCUIT-B1	EC-747
P0112	0112	IAT SEN/CIRCUIT-B1	EC-754
P0113	0113	IAT SEN/CIRCUIT-B1	EC-754
P0116	0116	ECT SEN/CIRC	EC-758
P0117	0117	ECT SEN/CIRC	EC-761
P0118	0118	ECT SEN/CIRC	EC-761
P0122	0122	TP SEN 2/CIRC-B1	EC-766
P0123	0123	TP SEN 2/CIRC-B1	EC-766
P0125	0125	ECT SENSOR	EC-771

DTC*1		Items (CONSULT-III screen terms)	Reference page
CONSULT-III GST*2	ECM*3		
P0127	0127	IAT SENSOR-B1	EC-774
P0128	0128	THERMSTAT FNCTN	EC-777

*1: 1st trip DTC No. is the same as DTC No.
*2: This number is prescribed by SAE J2012/ISO 15031-6.
*3: In Diagnostic Test Mode II (Self-diagnostic results), this number is controlled by NISSAN.

P0130-P0198

INFOID:0000000005285127

DTC*1		Items (CONSULT-III screen terms)	Reference page
CONSULT-III GST*2	ECM*3		
P0130	0130	A/F SENSOR1 (B1)	EC-779
P0131	0131	A/F SENSOR1 (B1)	EC-785
P0132	0132	A/F SENSOR1 (B1)	EC-791
P0133	0133	A/F SENSOR1 (B1)	EC-797
P0137	0137	HO2S2 (B1)	EC-804
P0138	0138	HO2S2 (B1)	EC-811
P0139	0139	HO2S2 (B1)	EC-820
P0171	0171	FUEL SYS-LEAN-B1	EC-828
P0172	0172	FUEL SYS-RICH-B1	EC-834
P0181	0181	FTT SENSOR	EC-840
P0182	0182	FTT SEN/CIRCUIT	EC-844
P0183	0183	FTT SEN/CIRCUIT	EC-844
P0196	0196	EOT SEN/CIRCUIT	EC-848
P0197	0197	EOT SEN/CIRCUIT	EC-851
P0198	0198	EOT SEN/CIRCUIT	EC-851

*1: 1st trip DTC No. is the same as DTC No.
*2: This number is prescribed by SAE J2012/ISO 15031-6.
*3: In Diagnostic Test Mode II (Self-diagnostic results), this number is controlled by NISSAN.

P0222-P0420

INFOID:0000000005285128

DTC*1		Items (CONSULT-III screen terms)	Reference page
CONSULT-III GST*2	ECM*3		
P0222	0222	TP SEN 1/CIRC-B1	EC-855
P0223	0223	TP SEN 1/CIRC-B1	EC-855
P0300	0300	MULTI CYL MISFIRE	EC-860
P0301	0301	CYL 1 MISFIRE	EC-860
P0302	0302	CYL 2 MISFIRE	EC-860
P0303	0303	CYL 3 MISFIRE	EC-860
P0304	0304	CYL 4 MISFIRE	EC-860
P0327	0327	KNOCK SEN/CIRC-B1	EC-866
P0328	0328	KNOCK SEN/CIRC-B1	EC-866

DTC*1		Items (CONSULT-III screen terms)	Reference page
CONSULT-III GST*2	ECM*3		
P0335	0335	CKP SEN/CIRCUIT	EC-870
P0340	0340	CMP SEN/CIRC-B1	EC-876
P0420	0420	TW CATALYST SYS-B1	EC-882

*1: 1st trip DTC No. is the same as DTC No.
*2: This number is prescribed by SAE J2012/ISO 15031-6.
*3: In Diagnostic Test Mode II (Self-diagnostic results), this number is controlled by NISSAN.

P0441-P0463

INFOID:0000000005285129

DTC*1		Items (CONSULT-III screen terms)	Reference page
CONSULT-III GST*2	ECM*3		
P0441	0441	EVAP PURG FLOW/MON	EC-887
P0442	0442	EVAP SMALL LEAK	EC-892
P0443	0443	PURG VOLUME CONT/V	EC-899
P0444	0444	PURG VOLUME CONT/V	EC-907
P0445	0445	PURG VOLUME CONT/V	EC-907
P0447	0447	VENT CONTROL VALVE	EC-913
P0448	0448	VENT CONTROL VALVE	EC-919
P0451	0451	EVAP SYS PRES SEN	EC-925
P0452	0452	EVAP SYS PRES SEN	EC-928
P0453	0453	EVAP SYS PRES SEN	EC-935
P0455	0455	EVAP GROSS LEAK	EC-943
P0456	0456	EVAP VERY SML LEAK	EC-950
P0460	0460	FUEL LEV SEN SLOSH	EC-958
P0461	0461	FUEL LEVEL SENSOR	EC-960
P0462	0462	FUEL LEVL SEN/CIRC	EC-962
P0463	0463	FUEL LEVL SEN/CIRC	EC-962

*1: 1st trip DTC No. is the same as DTC No.
*2: This number is prescribed by SAE J2012/ISO 15031-6.
*3: In Diagnostic Test Mode II (Self-diagnostic results), this number is controlled by NISSAN.

P0500-P0643

INFOID:0000000005285130

DTC*1		Items (CONSULT-III screen terms)	Reference page
CONSULT-III GST*2	ECM*3		
P0500	0500	VEH SPEED SEN/CIRC	EC-964
P0506	0506	ISC SYSTEM	EC-966
P0507	0507	ISC SYSTEM	EC-968
P0603	0603	ECM BACK UP/CIRCUIT	EC-970
P0605	0605	ECM	EC-973
P0607	0607	ECM	EC-975
P0643	0643	SENSOR POWER/CIRC	EC-976

*1: 1st trip DTC No. is the same as DTC No.
*2: This number is prescribed by SAE J2012/ISO 15031-6.
*3: In Diagnostic Test Mode II (Self-diagnostic results), this number is controlled by NISSAN.

P0705-P0840

INFOID:0000000005285131

DTC*1		Items (CONSULT-III screen terms)	Reference page
CONSULT-III GST*2	ECM*3		
P0705	0705	T/M RANGE SENSOR A	CVT-60
P0710	0710	FLUID TEMP SENSOR A*4	CVT-65
P0715	0715	INPUT SPEED SENSOR A	CVT-70
P0720	0720	OUTPUT SPEED SENSOR	CVT-75
P0740	0740	TORQUE CONVERTER	CVT-83
P0744	0744	TORQUE CONVERTER	CVT-88
P0745	0745	PC SOLENOID A	CVT-90
P0746	0746	PC SOLENOID A	CVT-95
P0776	0776	PC SOLENOID B	CVT-97
P0778	0778	PC SOLENOID B	CVT-99
P0840	0840	FLUID PRESS SEN/SW A	CVT-109

*1: 1st trip DTC No. is the same as DTC No.
*2: This number is prescribed by SAE J2012/ISO 15031-6.
*3: In Diagnostic Test Mode II (Self-diagnostic results), this number is controlled by NISSAN.
*4: When erasing this DTC, always use CONSULT-III or GST.

P0850-P1574

INFOID:0000000005285132

DTC*1		Items (CONSULT-III screen terms)	Reference page
CONSULT-III GST*2	ECM*3		
P0850	0850	P-N POS SW/CIRCUIT	EC-981
P1148	1148	CLOSED LOOP-B1	EC-986
P1212	1212	TCS/CIRC	EC-987
P1217	1217	ENG OVER TEMP	EC-988
P1225	1225	CTP LEARNING-B1	EC-1000
P1226	1226	CTP LEARNING-B1	EC-1002
P1421	1421	COLD START CONTROL	EC-1004
P1564	1564	ASCD SW	EC-1006
P1572	1572	ASCD BRAKE SW	EC-1012
P1574	1574	ASCD VHL SPD SEN	EC-1021

*1: 1st trip DTC No. is the same as DTC No.
*2: This number is prescribed by SAE J2012/ISO 15031-6.
*3: In Diagnostic Test Mode II (Self-diagnostic results), this number is controlled by NISSAN.

P1610-P1615

INFOID:0000000005285133

DTC*1		Items (CONSULT-III screen terms)	Reference page
CONSULT-III GST*2	ECM*3		
P1610	1610	LOCK MODE	BL-170
P1611	1611	ID DISCORD, IMM-ECM	
P1612	1612	CHAIN OF ECM-IMMU	
P1614	1614	CHAIN OF IMMU-KEY	
P1615	1615	DIFFERENCE OF KEY	

*1: 1st trip DTC No. is the same as DTC No.
*2: This number is prescribed by SAE J2012/ISO 15031-6.
*3: In Diagnostic Test Mode II (Self-diagnostic results), this number is controlled by NISSAN.

P1715-P1805

INFOID:0000000005285134

DTC*1		Items (CONSULT-III screen terms)	Reference page
CONSULT-III GST*2	ECM*3		
P1715	1715	IN PULY SPEED	EC-1023
P1740	1740	SLCT SOLENOID	CVT-128
P1777	1777	STEP MOTOR	CVT-134
P1778	1778	STEP MOTOR	CVT-138
P1805	1805	BRAKE SW/CIRCUIT	EC-1025

*1: 1st trip DTC No. is the same as DTC No.
*2: This number is prescribed by SAE J2012/ISO 15031-6.
*3: In Diagnostic Test Mode II (Self-diagnostic results), this number is controlled by NISSAN.

P2100-P2A00

INFOID:0000000005285135

DTC*1		Items (CONSULT-III screen terms)	Reference page
CONSULT-III GST*2	ECM*3		
P2100	2100	ETC MOT PWR-B1	EC-1029
P2101	2101	ETC FNCTN/CIRC-B1	EC-1033
P2103	2103	ETC MOT PWR	EC-1029
P2118	2118	ETC MOT-B1	EC-1039
P2119	2119	ETC ACTR-B1	EC-1043
P2122	2122	APP SEN 1/CIRC	EC-1045
P2123	2123	APP SEN 1/CIRC	EC-1045
P2127	2127	APP SEN 2/CIRC	EC-1050
P2128	2128	APP SEN 2/CIRC	EC-1050
P2135	2135	TP SENSOR-B1	EC-1057
P2138	2138	APP SENSOR	EC-1062
P2A00	2A00	A/F SENSOR1 (B1)	EC-1069

*1: 1st trip DTC No. is the same as DTC No.
*2: This number is prescribed by SAE J2012/ISO 15031-6.

*3: In Diagnostic Test Mode II (Self-diagnostic results), this number is controlled by NISSAN.

PRECAUTIONS

Precaution for Supplemental Restraint System (SRS) "AIR BAG" and "SEAT BELT PRE-TENSIONER"

INFOID:0000000005937450

The Supplemental Restraint System such as “AIR BAG” and “SEAT BELT PRE-TENSIONER”, used along with a front seat belt, helps to reduce the risk or severity of injury to the driver and front passenger for certain types of collision. This system includes seat belt switch inputs and dual stage front air bag modules. The SRS system uses the seat belt switches to determine the front air bag deployment, and may only deploy one front air bag, depending on the severity of a collision and whether the front occupants are belted or unbelted.
Information necessary to service the system safely is included in the SRS and SB section of this Service Manual.

WARNING:

- **To avoid rendering the SRS inoperative, which could increase the risk of personal injury or death in the event of a collision which would result in air bag inflation, all maintenance must be performed by an authorized NISSAN/INFINITI dealer.**
- **Improper maintenance, including incorrect removal and installation of the SRS, can lead to personal injury caused by unintentional activation of the system. For removal of Spiral Cable and Air Bag Module, see the SRS section.**
- **Do not use electrical test equipment on any circuit related to the SRS unless instructed to in this Service Manual. SRS wiring harnesses can be identified by yellow and/or orange harnesses or harness connectors.**

PRECAUTIONS WHEN USING POWER TOOLS (AIR OR ELECTRIC) AND HAMMERS

WARNING:

- **When working near the Airbag Diagnosis Sensor Unit or other Airbag System sensors with the Ignition ON or engine running, DO NOT use air or electric power tools or strike near the sensor(s) with a hammer. Heavy vibration could activate the sensor(s) and deploy the air bag(s), possibly causing serious injury.**
- **When using air or electric power tools or hammers, always switch the Ignition OFF, disconnect the battery, and wait at least 3 minutes before performing any service.**

On Board Diagnosis (OBD) System of Engine and CVT

INFOID:0000000005285137

The ECM has an on board diagnostic system. It will light up the malfunction indicator lamp (MIL) to warn the driver of a malfunction causing emission deterioration.

CAUTION:

- **Be sure to turn the ignition switch OFF and disconnect the battery ground cable before any repair or inspection work. The open/short circuit of related switches, sensors, solenoid valves, etc. will cause the MIL to light up.**
- **Be sure to connect and lock the connectors securely after work. A loose (unlocked) connector will cause the MIL to light up due to the open circuit. (Be sure the connector is free from water, grease, dirt, bent terminals, etc.)**
- **Certain systems and components, especially those related to OBD, may use a new style slide-locking type harness connector. For description and how to disconnect, refer to PG-59 .**
- **Be sure to route and secure the harnesses properly after work. The interference of the harness with a bracket, etc. may cause the MIL to light up due to the short circuit.**
- **Be sure to connect rubber tubes properly after work. A misconnected or disconnected rubber tube may cause the MIL to light up due to the malfunction of the EVAP system or fuel injection system, etc.**
- **Be sure to erase the unnecessary malfunction information (repairs completed) from the ECM and TCM (Transmission control module) before returning the vehicle to the customer.**

Precaution

INFOID:0000000005285138

- **Always use a 12 V battery as power source.**
- **Do not attempt to disconnect battery cables while engine is running.**
- **Before connecting or disconnecting the ECM harness connector, turn ignition switch OFF and disconnect negative battery cable. Failure to do so may damage the ECM because battery voltage is applied to ECM even if ignition switch is turned OFF.**
- **Before removing parts, turn ignition switch OFF and then disconnect negative battery cable.**

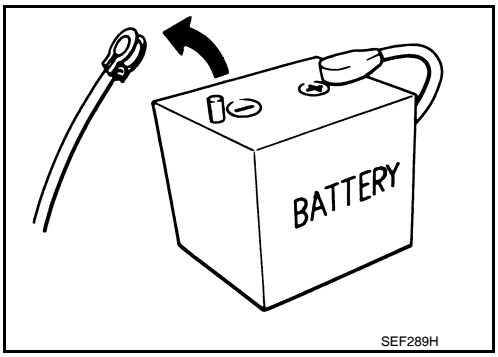

SEF289H

- **Do not disassemble ECM.**
- **If battery cable is disconnected, the memory will return to the initial ECM values.**
  The ECM will now start to self-control at its initial values. Engine operation can vary slightly in this case. However, this is not an indication of a malfunction. Do not replace parts because of a slight variation.
- **If the battery is disconnected, the following emission-related diagnostic information will be lost within 24 hours.**

- **Diagnostic trouble codes**
- **1st trip diagnostic trouble codes**
- **Freeze frame data**
- **1st trip freeze frame data**
- **System readiness test (SRT) codes**
- **Test values**

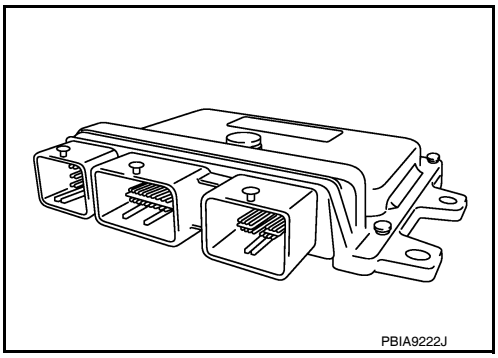
PBIA9222J

- **When connecting ECM harness connector, fasten (B) it securely with a lever (1) as far as it will go as shown in the figure.**

- **ECM (2)**
- **Loosen (A)**

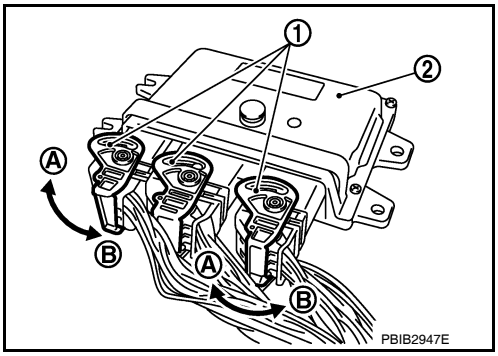

PBIB2947E

- **When connecting or disconnecting pin connectors into or from ECM, take care not to damage pin terminals (bend or break).**
  Make sure that there are not any bends or breaks on ECM pin terminal, when connecting pin connectors.
- **Securely connect ECM harness connectors.**
  A poor connection can cause an extremely high (surge) voltage to develop in coil and condenser, thus resulting in damage to ICs.
- **Keep engine control system harness at least 10 cm (4 in) away from adjacent harness, to prevent engine control system malfunctions due to receiving external noise, degraded operation of ICs, etc.**
- **Keep engine control system parts and harness dry.**

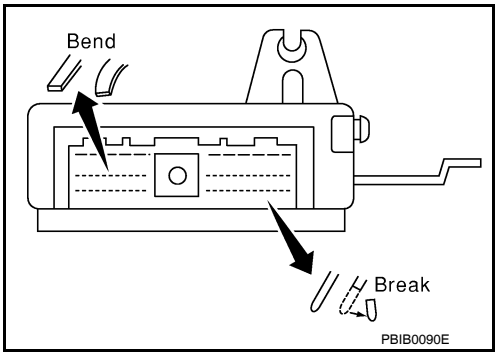

PBIB0090E

- **Before replacing ECM, perform "ECM Terminals and Reference Value" inspection and make sure ECM functions properly. Refer to EC-679, "ECM Terminal and Reference Value" .**
- **Handle mass air flow sensor carefully to avoid damage.**
- **Do not disassemble mass air flow sensor.**
- **Do not clean mass air flow sensor with any type of detergent.**
- **Do not disassemble electric throttle control actuator.**
- **Even a slight leak in the air intake system can cause serious incidents.**
- **Do not shock or jar the camshaft position sensor (PHASE), crankshaft position sensor (POS).**
- **After performing each TROUBLE DIAGNOSIS, perform DTC Confirmation Procedure or Overall Function Check.**
  The DTC should not be displayed in the DTC Confirmation Procedure if the repair is completed. The Overall Function Check should be a good result if the repair is completed.

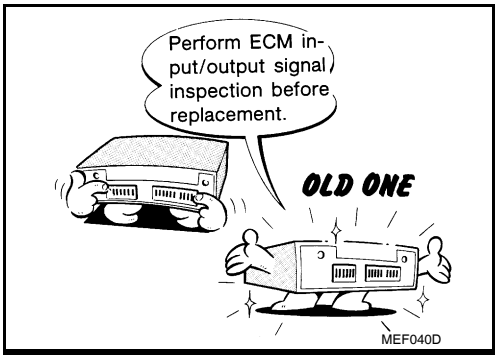

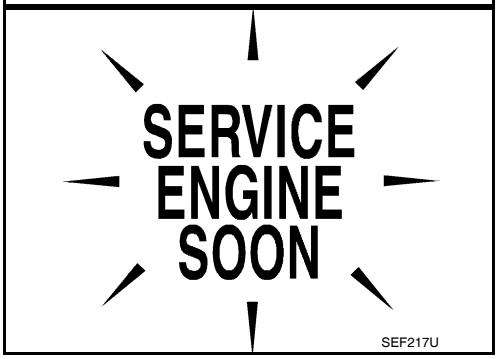

- **When measuring ECM signals with a circuit tester, never allow the two tester probes to contact.**
  Accidental contact of probes will cause a short circuit and damage the ECM power transistor.

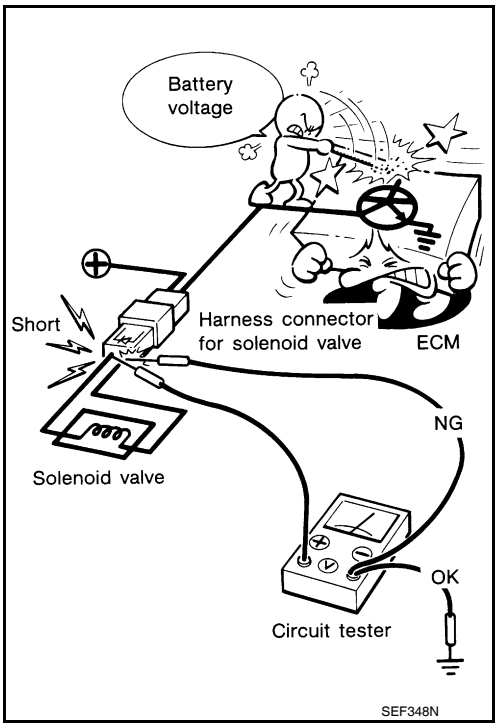

- **Do not operate fuel pump when there is no fuel in lines.**
- **Fuel level sensor unit and fuel pump (1)**
- **Fuel pressure regulator (2)**
- **Fuel level sensor (3)**
- **Fuel tank temperature sensor (4)**
- **Tighten fuel hose clamps to the specified torque.**

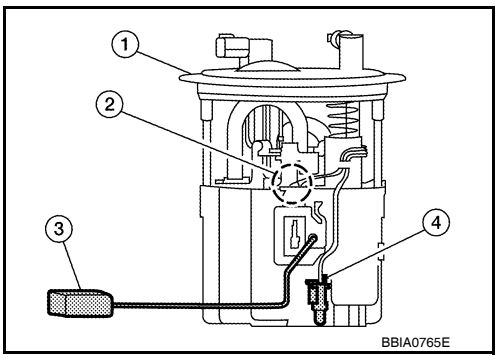

- **Do not depress accelerator pedal when starting.**
- **Immediately after starting, do not rev up engine unnecessarily.**
- **Do not rev up engine just prior to shutdown.**

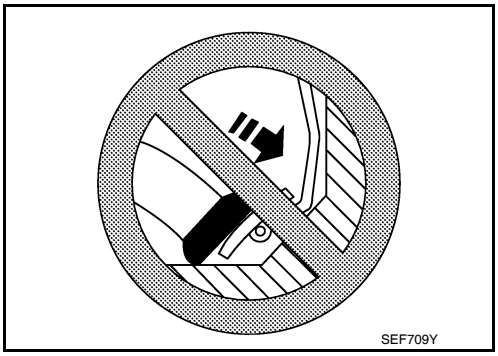

- **When installing C.B. ham radio or a mobile phone, be sure to observe the following as it may adversely affect electronic control systems depending on installation location.**
  - **Keep the antenna as far as possible from the electronic control units.**
  - **Keep the antenna feeder line more than 20 cm (8 in) away from the harness of electronic controls.**
    Do not let them run parallel for a long distance.
  - **Adjust the antenna and feeder line so that the standing-wave radio can be kept smaller.**
  - **Be sure to ground the radio to vehicle body.**

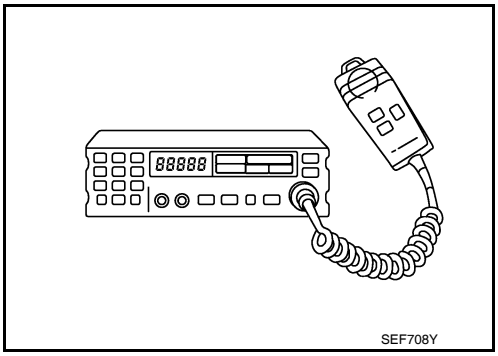

PREPARATION

Special Service Tool

INFOID:0000000005285139

The actual shapes of Kent-Moore tools may differ from those of special service tools illustrated here.

Tool number (Kent-Moore No.) Tool name	Description
(J-44321) Fuel pressure gauge Kit 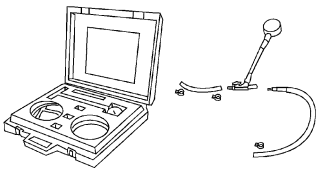 LEC642	Checking fuel pressure
(J-44321-6) Fuel pressure adapter 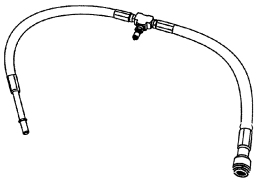 LBIA0376E	Connecting fuel pressure gauge to quick connector type fuel lines.
KV10118400 Fuel tube adapter 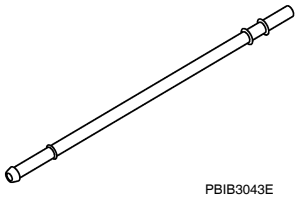 PBIB3043E	Measuring fuel pressure

Commercial Service Tool

INFOID:0000000005285140

Tool number (Kent-Moore No.) Tool name	Description
Leak detector i.e.: (J-41416) 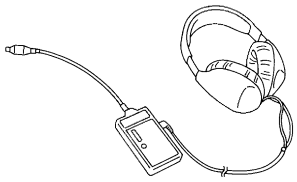 S-NT703	Locating the EVAP leak
EVAP service port adapter i.e.: (J-41413-OBD) 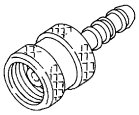 S-NT704	Applying positive pressure through EVAP service port

Tool number (Kent-Moore No.) Tool name	Description
Fuel filler cap adapter i.e.: (MLR-8382) 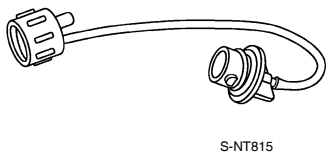 S-NT815	Checking fuel tank vacuum relief valve opening pressure
Socket wrench 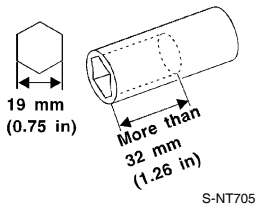 S-NT705	Removing and installing engine coolant temperature sensor
Oxygen sensor thread cleaner i.e.: (J-43897-18) (J-43897-12) 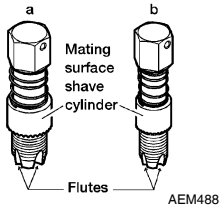 AEM488	Reconditioning the exhaust system threads before installing a new oxygen sensor. Use with anti-seize lubricant shown below. **a: 18 mm diameter with pitch 1.5 mm for Zirconia Oxygen Sensor** **b: 12 mm diameter with pitch 1.25 mm for Titania Oxygen Sensor**
Anti-seize lubricant i.e.: (Permatex™ 133AR or equivalent meeting MIL specification MIL-A-907) 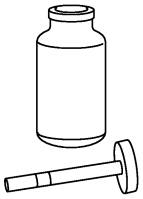 S-NT779	Lubricating oxygen sensor thread cleaning tool when reconditioning exhaust system threads.

ENGINE CONTROL SYSTEM

Schematic

INFOID:0000000005285141

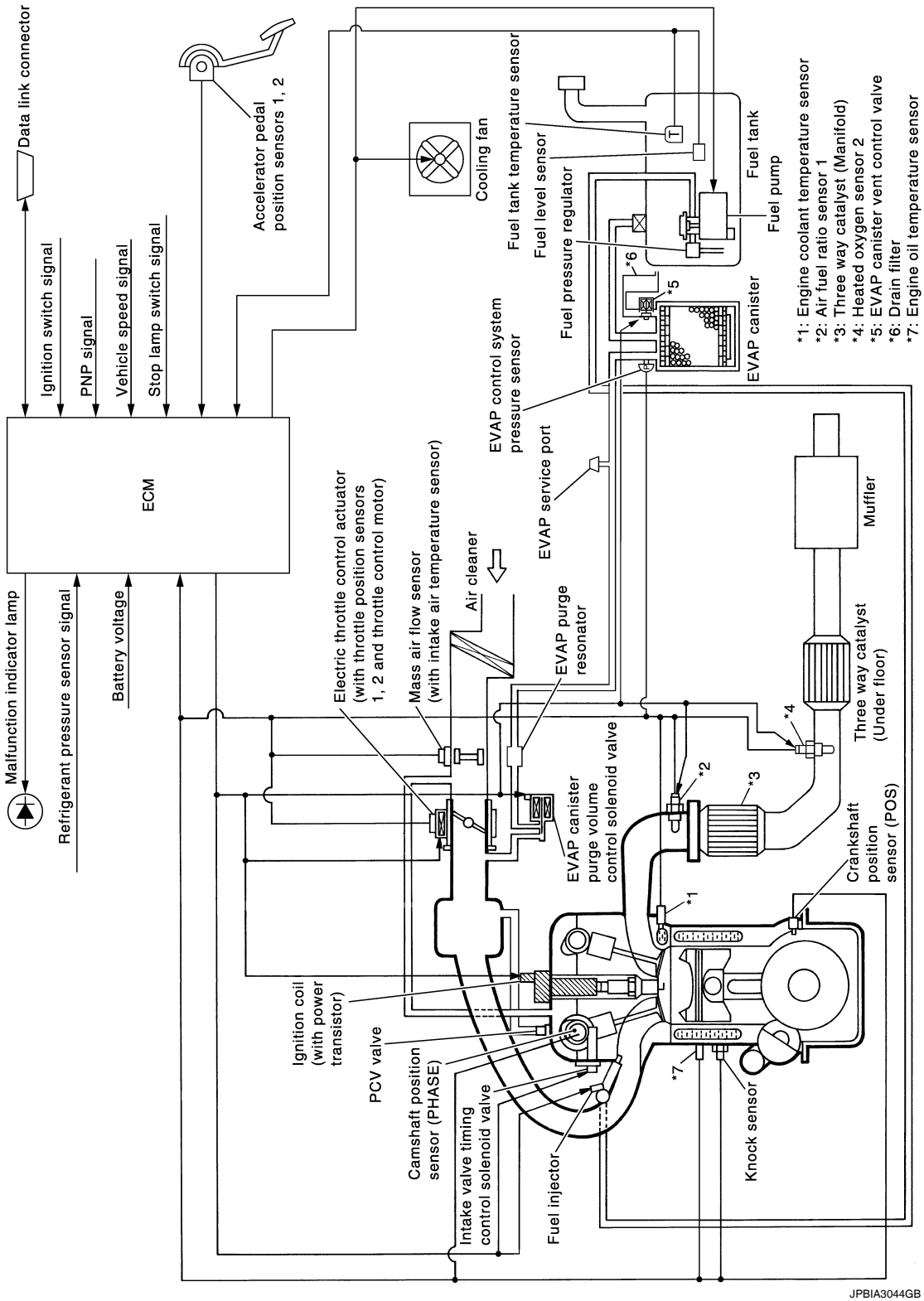

Multiport Fuel Injection (MFI) System

INFOID:0000000005285142

INPUT/OUTPUT SIGNAL CHART

Sensor	Input Signal to ECM	ECM function	Actuator
Crankshaft position sensor (POS)	Engine speed*3 Piston position	Fuel injection & mixture ratio control	Fuel injector
Camshaft position sensor (PHASE)			
Mass air flow sensor	Amount of intake air		
Engine coolant temperature sensor	Engine coolant temperature		
Air fuel ratio (A/F) sensor 1	Density of oxygen in exhaust gas		
Throttle position sensor	Throttle position		
Accelerator pedal position sensor	Accelerator pedal position		
Park/neutral position (PNP) switch (M/T) Transmission range switch (CVT)	Gear position		
Battery	Battery voltage*3		
Knock sensor	Engine knocking condition		
EPS control unit	Power steering operation*2		
Heated oxygen sensor 2*1	Density of oxygen in exhaust gas		
Air conditioner switch	Air conditioner operation*2		
ABS actuator and electric unit (control unit)	Vehicle speed*2		
Combination meter			

*1: This sensor is not used to control the engine system under normal conditions.

*2: This signal is sent to the ECM through CAN communication line.

*3: ECM determines the start signal status by the signals of engine speed and battery voltage.

SYSTEM DESCRIPTION

The amount of fuel injected from the fuel injector is determined by the ECM. The ECM controls the length of time the valve remains open (injection pulse duration). The amount of fuel injected is a program value in the ECM memory. The program value is preset by engine operating conditions. These conditions are determined by input signals (for engine speed and intake air) from the crankshaft position sensor (POS), camshaft position sensor (PHASE) and the mass air flow sensor.

VARIOUS FUEL INJECTION INCREASE/DECREASE COMPENSATION

In addition, the amount of fuel injected is compensated to improve engine performance under various operating conditions as listed below.

<Fuel increase>
- During warm-up
- When starting the engine
- During acceleration
- Hot-engine operation
- When selector lever is changed from N to D (CVT models)
- High-load, high-speed operation

<Fuel decrease>
- During deceleration
- During high engine speed operation

MIXTURE RATIO FEEDBACK CONTROL (CLOSED LOOP CONTROL)

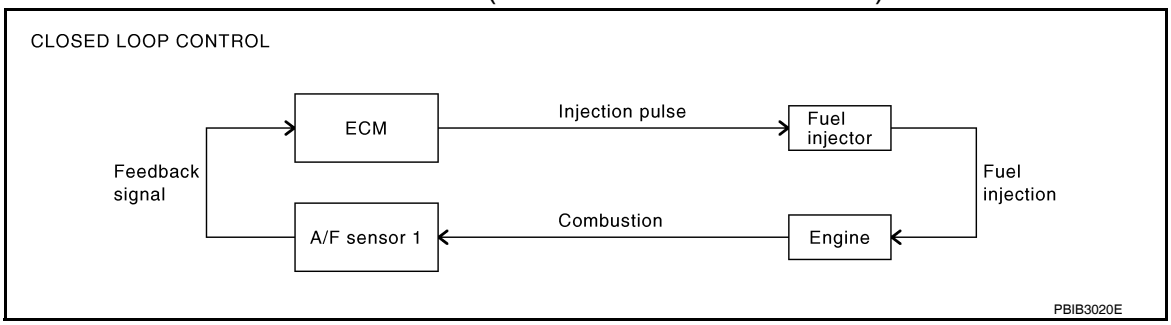

The mixture ratio feedback system provides the best air/fuel mixture ratio for drivability and emission control. The three way catalyst (manifold) can then better reduce CO, HC and NOx emissions. This system uses air fuel ratio (A/F) sensor 1 in the exhaust manifold to monitor whether the engine operation is rich or lean. The ECM adjusts the injection pulse width according to the sensor voltage signal. For more information about air fuel ratio (A/F) sensor 1, refer to EC-785. This maintains the mixture ratio within the range of stoichiometric (ideal air/fuel mixture).
This stage is referred to as the closed loop control condition.
Heated oxygen sensor 2 is located downstream of the three way catalyst (manifold). Even if the switching characteristics of air fuel ratio (A/F) sensor 1 shift, the air/fuel ratio is controlled to stoichiometric by the signal from heated oxygen sensor 2.

Open Loop Control
The open loop system condition refers to when the ECM detects any of the following conditions. Feedback control stops in order to maintain stabilized fuel combustion.
- Deceleration and acceleration
- High-load, high-speed operation
- Malfunction of air fuel ratio (A/F) sensor 1 or its circuit
- Insufficient activation of air fuel ratio (A/F) sensor 1 at low engine coolant temperature
- High engine coolant temperature
- During warm-up
- After shifting from N to D (CVT models)
- When starting the engine

MIXTURE RATIO SELF-LEARNING CONTROL
The mixture ratio feedback control system monitors the mixture ratio signal transmitted from air fuel ratio (A/F) sensor 1. This feedback signal is then sent to the ECM. The ECM controls the basic mixture ratio as close to the theoretical mixture ratio as possible. However, the basic mixture ratio is not necessarily controlled as originally designed. Both manufacturing differences (i.e., mass air flow sensor hot wire) and characteristic changes during operation (i.e., fuel injector clogging) directly affect mixture ratio.
Accordingly, the difference between the basic and theoretical mixture ratios is monitored in this system. This is then computed in terms of “injection pulse duration” to automatically compensate for the difference between the two ratios.
“Fuel trim” refers to the feedback compensation value compared against the basic injection duration. Fuel trim includes short term fuel trim and long term fuel trim.
“Short term fuel trim” is the short-term fuel compensation used to maintain the mixture ratio at its theoretical value. The signal from air fuel ratio (A/F) sensor 1 indicates whether the mixture ratio is RICH or LEAN compared to the theoretical value. The signal then triggers a reduction in fuel volume if the mixture ratio is rich, and an increase in fuel volume if it is lean.
“Long term fuel trim” is overall fuel compensation carried out long-term to compensate for continual deviation of the short term fuel trim from the central value. Such deviation will occur due to individual engine differences, wear over time and changes in the usage environment.

FUEL INJECTION TIMING

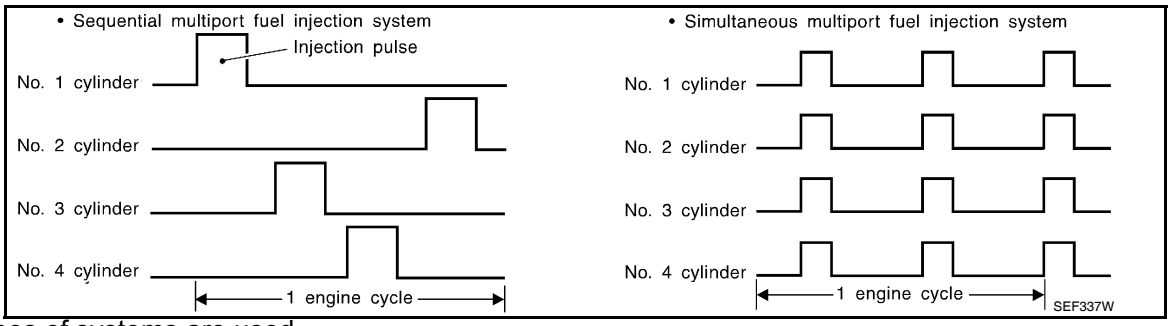

Two types of systems are used.

Sequential Multiport Fuel Injection System
Fuel is injected into each cylinder during each engine cycle according to the firing order. This system is used when the engine is running.

Simultaneous Multiport Fuel Injection System
Fuel is injected simultaneously into all four cylinders twice each engine cycle. In other words, pulse signals of the same width are simultaneously transmitted from the ECM.
The four fuel injectors will then receive the signals two times for each engine cycle.

This system is used when the engine is being started and/or if the fail-safe system (CPU) is operating.

FUEL SHUT-OFF

Fuel to each cylinder is cut off during deceleration, operation of the engine at excessively high speeds or operation of the vehicle at excessively high speeds.

Electronic Ignition (EI) System

INFOID:0000000005285143

INPUT/OUTPUT SIGNAL CHART

Sensor	Input Signal to ECM	ECM function	Actuator
Crankshaft position sensor (POS)	Engine speed*2 Piston position	Ignition timing control	Power transistor
Camshaft position sensor (PHASE)			
Mass air flow sensor	Amount of intake air		
Engine coolant temperature sensor	Engine coolant temperature		
Throttle position sensor	Throttle position		
Accelerator pedal position sensor	Accelerator pedal position		
Battery	Battery voltage*2		
Knock sensor	Engine knocking		
Park/neutral position (PNP) switch (M/T) Transmission range switch (CVT)	Gear position		
ABS actuator and electric unit (control unit)	Vehicle speed*1		
Combination meter			

*1: This signal is sent to the ECM through CAN communication line.

*2: ECM determines the start signal status by the signals of engine speed and battery voltage.

SYSTEM DESCRIPTION

Firing order: 1 - 3 - 4 - 2

The ignition timing is controlled by the ECM to maintain the best air-fuel ratio for every running condition of the engine. The ignition timing data is stored in the ECM.

The ECM receives information such as the injection pulse width and camshaft position sensor (PHASE) signal. Computing this information, ignition signals are transmitted to the power transistor.

During the following conditions, the ignition timing is revised by the ECM according to the other data stored in the ECM.

- At starting
- During warm-up
- At idle
- At low battery voltage
- During acceleration

The knock sensor retard system is designed only for emergencies. The basic ignition timing is programmed within the anti-knocking zone, if recommended fuel is used under dry conditions. The retard system does not operate under normal driving conditions. If engine knocking occurs, the knock sensor monitors the condition. The signal is transmitted to the ECM. The ECM retards the ignition timing to eliminate the knocking condition.

Fuel Cut Control (at No Load and High Engine Speed)

INFOID:0000000005285144

INPUT/OUTPUT SIGNAL CHART

Sensor	Input Signal to ECM	ECM function	Actuator
Park/neutral position (PNP) switch (M/T) Transmission range switch (CVT)	Neutral position	Fuel cut control	Fuel injector
Accelerator pedal position sensor	Accelerator pedal position		
Engine coolant temperature sensor	Engine coolant temperature		
Crankshaft position sensor (POS) Camshaft position sensor (PHASE)	Engine speed		
ABS actuator and electric unit (control unit)	Vehicle speed*		
Combination meter			

*: This signal is sent to the ECM through CAN communication line.

SYSTEM DESCRIPTION

If the engine speed is above 2,000 rpm under no load (for example, the shift lever position is P or N (CVT), Neutral (M/T) and engine speed is over 2,400 rpm) fuel will be cut off after some time. The exact time when the fuel is cut off varies based on engine speed.
Fuel cut will be operated until the engine speed reaches 1,500 rpm, then fuel cut will be cancelled.

NOTE:
This function is different from deceleration control listed under EC-591, "Multiport Fuel Injection (MFI) System".

AIR CONDITIONING CUT CONTROL

Input/Output Signal Chart

INFOID:0000000005285145

Sensor	Input Signal to ECM	ECM function	Actuator
Air conditioner switch	Air conditioner ON signal*1	Air conditioner cut control	Air conditioner relay
Accelerator pedal position sensor	Accelerator pedal position		
Crankshaft position sensor (POS) Camshaft position sensor (PHASE)	Engine speed*2		
Engine coolant temperature sensor	Engine coolant temperature		
Battery	Battery voltage*2		
Refrigerant pressure sensor	Refrigerant pressure		
EPS control unit	Power steering operation*1		
ABS actuator and electric unit (control unit)	Vehicle speed*1		
Combination meter			

*1: This signal is sent to the ECM through CAN communication line.

*2: ECM determines the start signal status by the signals of engine speed and battery voltage.

System Description

INFOID:0000000005285146

This system improves engine operation when the air conditioner is used.
Under the following conditions, the air conditioner is turned off.

- When the accelerator pedal is fully depressed.
- When cranking the engine.
- At high engine speeds.
- When the engine coolant temperature becomes excessively high.
- When operating power steering during low engine speed or low vehicle speed.
- When engine speed is excessively low.
- When refrigerant pressure is excessively low or high.

AUTOMATIC SPEED CONTROL DEVICE (ASCD)

System Description

INFOID:0000000005285147

INPUT/OUTPUT SIGNAL CHART

Sensor	Input signal to ECM	ECM function	Actuator
ASCD brake switch	Brake pedal operation	ASCD vehicle speed control	Electric throttle control actuator
Stop lamp switch	Brake pedal operation		
ASCD clutch switch (M/T models)	Clutch pedal operation		
ASCD steering switch	ASCD steering switch operation		
Park/neutral position (PNP) switch (M/T) Transmission range switch (CVT)	Gear position		
ABS actuator and electric unit (control unit)	Vehicle speed*		
Combination meter			
TCM (CVT models)	Powertrain revolution*		

*: This signal is sent to the ECM through CAN communication line.

BASIC ASCD SYSTEM

Refer to Owner's Manual for ASCD operating instructions.
Automatic Speed Control Device (ASCD) allows a driver to keep vehicle at predetermined constant speed without depressing accelerator pedal. Driver can set vehicle speed in advance between approximately 40 km/h (25 MPH) and 144 km/h (89 MPH).
ECM controls throttle angle of electric throttle control actuator to regulate engine speed.
Operation status of ASCD is indicated by CRUISE indicator and SET indicator in combination meter. If any malfunction occurs in ASCD system, it automatically deactivates control.

NOTE:
Always drive vehicle in safe manner according to traffic conditions and obey all traffic laws.

SET OPERATION

Press MAIN switch. (The CRUISE indicator in combination meter illuminates.)
When vehicle speed reaches a desired speed between approximately 40 km/h (25 MPH) and 144 km/h (89 MPH), press SET/COAST switch. (Then SET indicator in combination meter illuminates.)

ACCELERATE OPERATION

If the RESUME/ACCELERATE switch is depressed during cruise control driving, increase the vehicle speed until the switch is released or vehicle speed reaches maximum speed controlled by the system.
And then ASCD will keep the new set speed.

CANCEL OPERATION

When any of following conditions exist, cruise operation will be canceled.
- CANCEL switch is pressed
- More than two switches at ASCD steering switch are pressed at the same time (Set speed will be cleared)
- Brake pedal is depressed
- Clutch pedal is depressed or gear position is changed to the neutral position (M/T models)
- Selector lever is changed to N, P, R position (CVT models)
- Vehicle speed decreased to 13 km/h (8 MPH) lower than the set speed

When the ECM detects any of the following conditions, the ECM will cancel the cruise operation and inform the driver by blinking indicator lamp.
- Engine coolant temperature is slightly higher than the normal operating temperature, CRUISE lamp may blink slowly.
  When the engine coolant temperature decreases to the normal operating temperature, CRUISE lamp will stop blinking and the cruise operation will be able to work by pressing SET/COAST switch or RESUME/ACCELERATE switch.
- Malfunction for some self-diagnoses regarding ASCD control: SET lamp will blink quickly.

If MAIN switch is turned to OFF during ASCD is activated, all of ASCD operations will be canceled and vehicle speed memory will be erased.

COAST OPERATION

When the SET/COAST switch is depressed during cruise control driving, decrease vehicle set speed until the switch is released. And then ASCD will keep the new set speed.

RESUME OPERATION

When the RESUME/ACCELERATE switch is depressed after cancel operation other than depressing MAIN switch is performed, vehicle speed will return to last set speed. To resume vehicle set speed, vehicle condition must meet following conditions.

- Brake pedal is released.
- Clutch pedal is released (M/T models)
- Selector lever is in other than P and N positions (CVT models)
- Vehicle speed is greater than 40 km/h (25 MPH) and less than 144 km/h (89 MPH)

Component Description

INFOID:0000000005285148

ASCD STEERING SWITCH

Refer to EC-1006.

ASCD BRAKE SWITCH

Refer to EC-1012 and EC-1076.

ASCD CLUTCH SWITCH

Refer to EC-1012 and EC-1076.

STOP LAMP SWITCH

Refer to EC-1012, EC-1025and EC-1076.

ELECTRIC THROTTLE CONTROL ACTUATOR

Refer to EC-1029, EC-1033, EC-1039and EC-1043.

ASCD INDICATOR

Refer to EC-1084.

CAN COMMUNICATION

System Description

INFOID:0000000005285149

CAN (Controller Area Network) is a serial communication line for real time application. It is an on-vehicle multiplex communication line with high data communication speed and excellent error detection ability. Many electronic control units are equipped onto a vehicle, and each control unit shares information and links with other control units during operation (not independent). In CAN communication, control units are connected with 2 communication lines (CAN H line, CAN L line) allowing a high rate of information transmission with less wiring. Each control unit transmits/receives data but selectively reads required data only.

EVAPORATIVE EMISSION SYSTEM

Description

INFOID:0000000005285150

SYSTEM DESCRIPTION

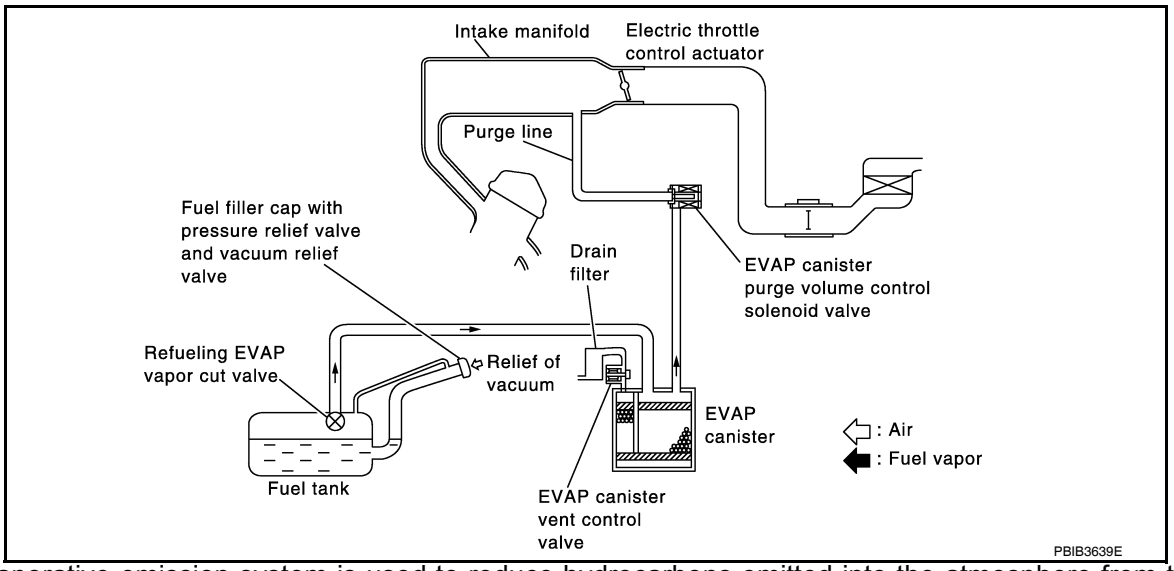

The evaporative emission system is used to reduce hydrocarbons emitted into the atmosphere from the fuel system. This reduction of hydrocarbons is accomplished by activated charcoals in the EVAP canister.
The fuel vapor in the sealed fuel tank is led into the EVAP canister which contains activated carbon and the vapor is stored there when the engine is not operating or when refueling to the fuel tank.
The vapor in the EVAP canister is purged by the air through the purge line to the intake manifold when the engine is operating. EVAP canister purge volume control solenoid valve is controlled by ECM. When the engine operates, the flow rate of vapor controlled by EVAP canister purge volume control solenoid valve is proportionally regulated as the air flow increases.
EVAP canister purge volume control solenoid valve also shuts off the vapor purge line during decelerating and idling.

EVAPORATIVE EMISSION LINE DRAWING

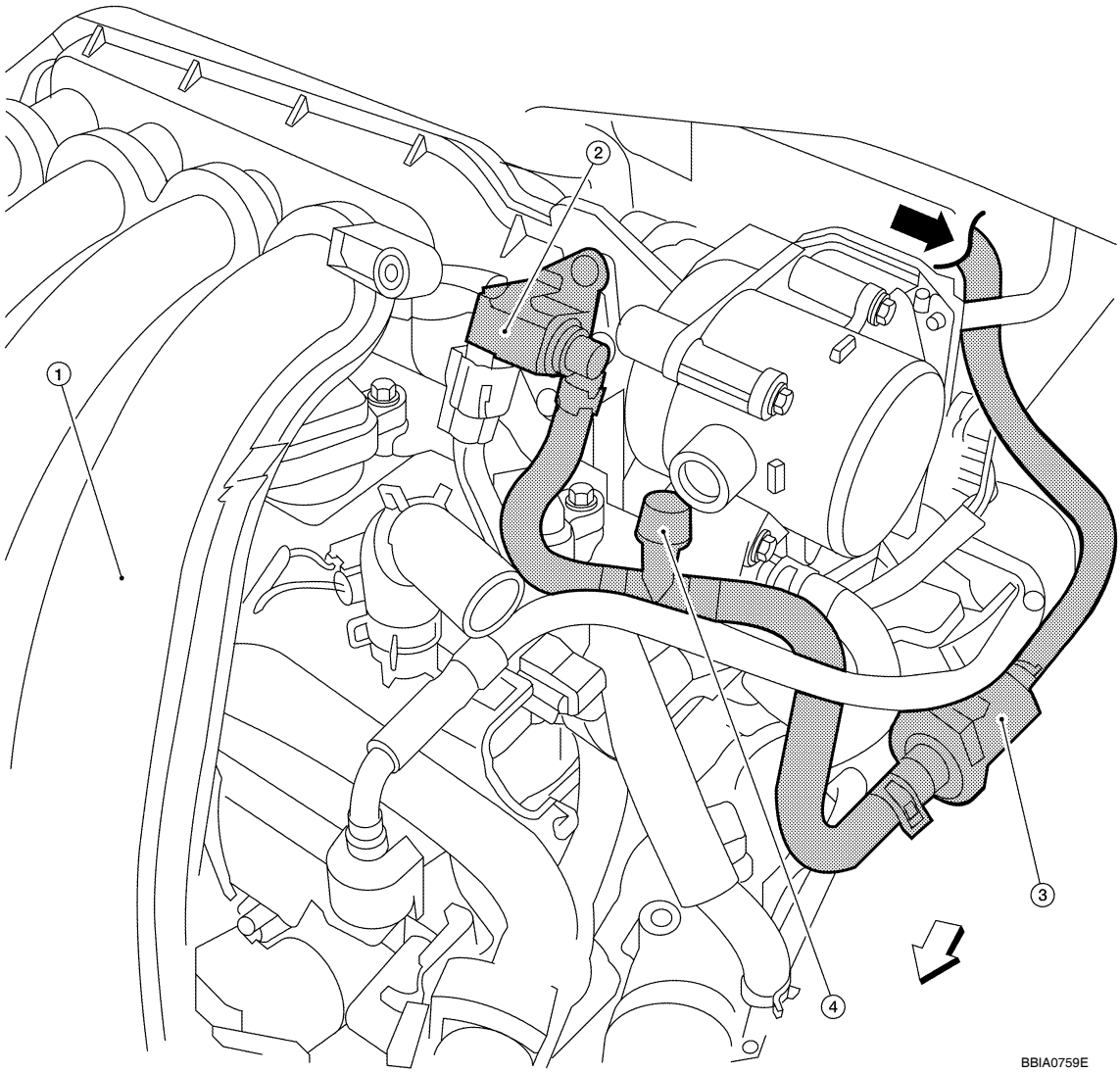

⇦ : Vehicle front

⬅ : From next figure

1. Intake manifold
2. EVAP canister purge volume control solenoid valve
3. EVAP purge resonator
4. EVAP service port

NOTE: Do not use soapy water or any type of solvent while installing vacuum hose or purge hoses.

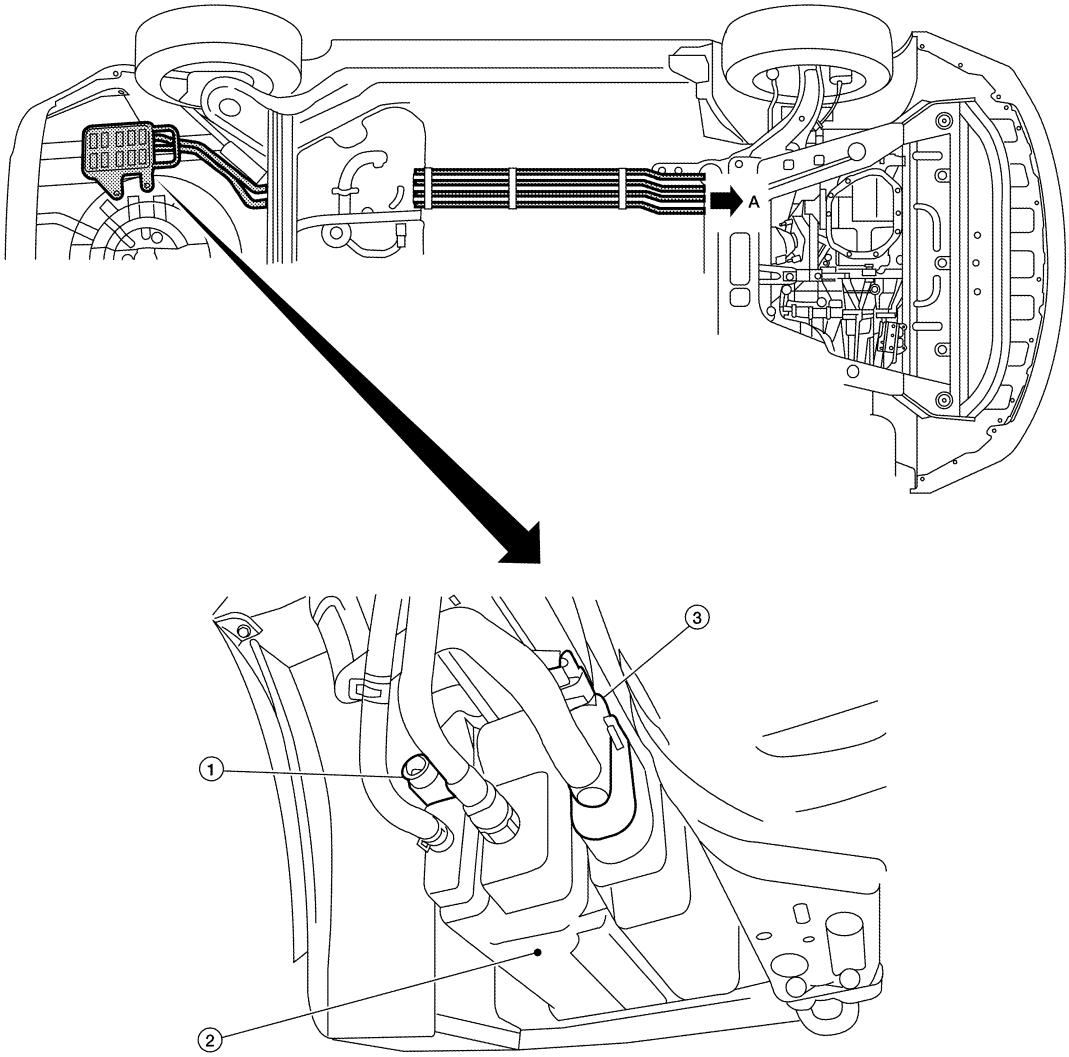

⬅ : To previous figure

1. EVAP control system pressure sensor 2. EVAP canister 3. EVAP canister vent control valve

NOTE: Do not use soapy water or any type of solvent while installing vacuum hose or purge hoses.

Component Inspection

INFOID:0000000005285151

EVAP CANISTER

Check EVAP canister as follows:

1. Block port **(B)**.
2. Blow air into port **(A)** and confirm that it flows freely out of port (**C**).
3. Release blocked port **(B)**.
4. Apply vacuum pressure to port **(B)** and confirm that vacuum pressure exists at the ports **(A)** and (**C**).
5. Block port **(A)** and **(B)**.
6. Apply pressure to port **(C)** and check that there is no leakage.

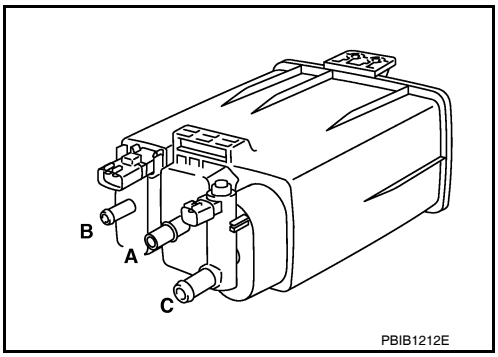

FUEL TANK VACUUM RELIEF VALVE (BUILT INTO FUEL FILLER CAP)

1. Wipe clean valve housing.

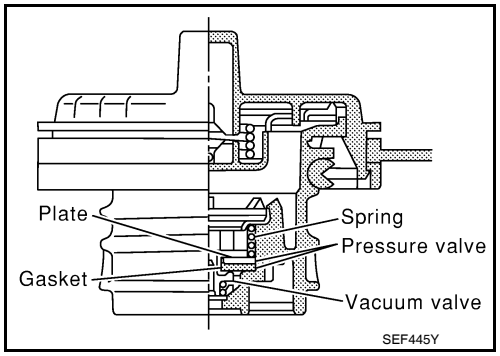

2. Check valve opening pressure and vacuum.

Pressure: **15.3 - 20.0 kPa**
(0.156 - 0.204 kg/cm^2, 2.22 - 2.90 psi)
Vacuum: **–6.0 to –3.4 kPa**
(–0.061 to –0.035 kg/cm^2, –0.87 to –0.48 psi)

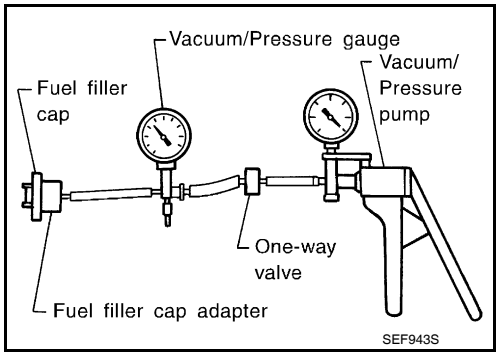

3. If out of specification, replace fuel filler cap as an assembly.

CAUTION:
Use only a genuine fuel filler cap as a replacement. If an incorrect fuel filler cap is used, the MIL may come on.

EVAP CANISTER PURGE VOLUME CONTROL SOLENOID VALVE

Refer to EC-912, "Component Inspection".

FUEL TANK TEMPERATURE SENSOR

Refer to EC-847, "Component Inspection".

EVAP CANISTER VENT CONTROL VALVE

Refer to EC-917, "Component Inspection".

EVAP CONTROL SYSTEM PRESSURE SENSOR

Refer to EC-934, "Component Inspection".

EVAP SERVICE PORT

Positive pressure is delivered to the EVAP system through the EVAP service port. If fuel vapor leakage in the EVAP system occurs, use a leak detector to locate the leak.

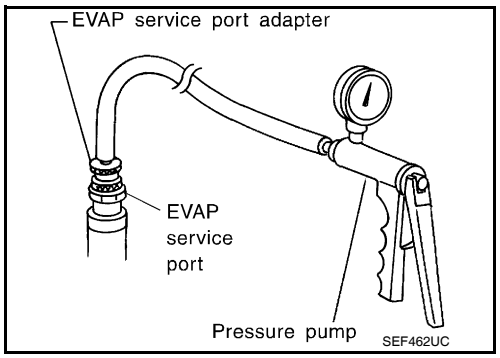

Removal and Installation

INFOID:0000000005285152

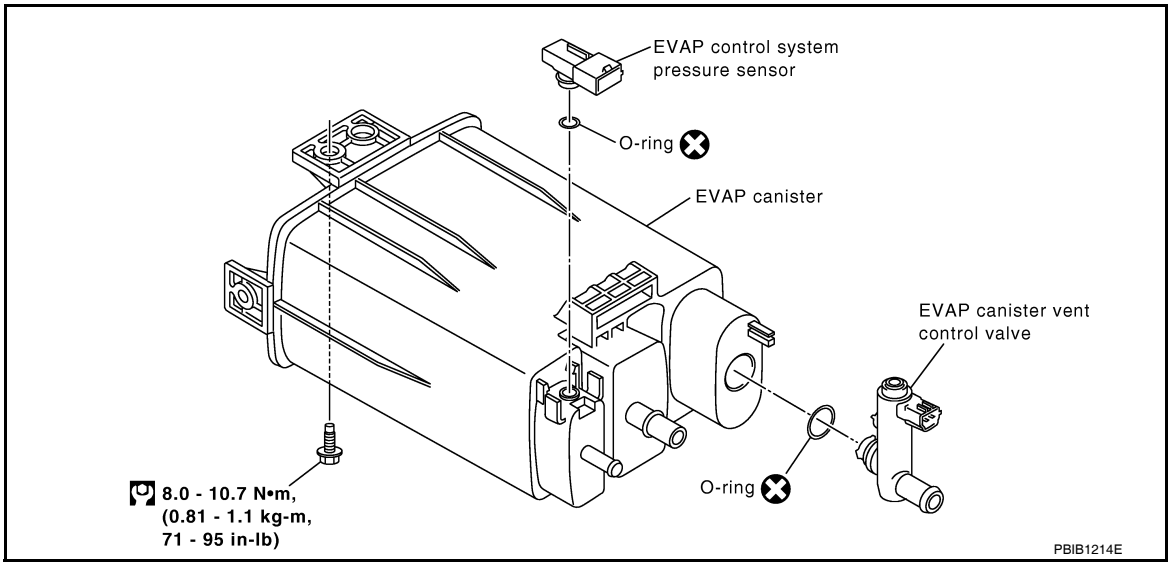

EVAP CANISTER

Removal

1. Remove EVAP canister protector.
2. Disconnect the EVAP control pressure sensor connector.
3. Remove the EVAP control pressure sensor and O-ring, if necessary.
4. Disconnect EVAP canister purge hose.
5. Remove the EVAP canister retaining bolt.
6. Disconnect fuel tank EVAP breather hose.
7. Disconnect EVAP vent control valve connector.
8. Disconnect the EVAP vent control valve hose.
9. Remove the EVAP canister.
10. Remove the EVAP vent control valve and O-ring, if necessary.

Installation

Installation is in the reverse order of removal.

CAUTION:

Always replace O-rings with a new one.

EVAP CANISTER CONTROL PRESSURE SENSOR

Removal

1. Remove EVAP canister protector.
2. Disconnect the EVAP control pressure sensor connector.
3. Remove the EVAP canister control pressure sensor and O-ring.

Installation

Installation is in the reverse order of removal.

CAUTION:

Always replace O-ring with a new one.

EVAP CANISTER VENT CONTROL VALVE

1. Remove EVAP canister protector.
2. Disconnect EVAP vent control valve connector.
3. Disconnect the EVAP vent control valve hose.

4. Turn EVAP canister vent control valve counterclockwise.
5. Remove the EVAP canister vent control valve.

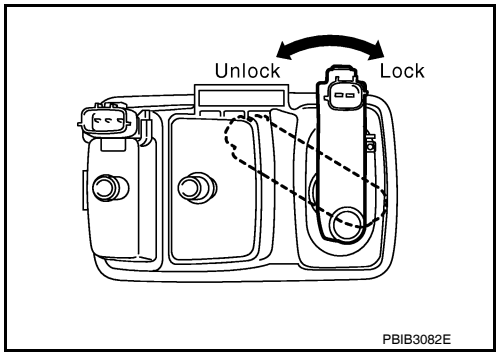

Installation

Installation is in the reverse order of removal.

CAUTION:

Always replace O-ring with a new one.

How to Detect Fuel Vapor Leakage

INFOID:0000000005285153

CAUTION:

- **Never use compressed air or a high pressure pump.**
- **Do not exceed 4.12 kPa (0.042 kg/cm^2, 0.6 psi) of pressure in EVAP system.**

NOTE:

- Do not start engine.
- Improper installation of EVAP service port adapter to the EVAP service port may cause a leak.

WITH CONSULT-III

1. Attach the EVAP service port adapter securely to the EVAP service port.
2. Also attach the pressure pump and hose to the EVAP service port adapter.
3. Turn ignition switch ON.
4. Select the “EVAP SYSTEM CLOSE” of “WORK SUPPORT MODE” with CONSULT-III.
5. Touch “START”. A bar graph (Pressure indicating display) will appear on the screen.
6. Apply positive pressure to the EVAP system until the pressure indicator reaches the middle of the bar graph.
7. Remove EVAP service port adapter and hose with pressure pump.
8. Locate the leak using a leak detector. Refer to EC-600, "Description".

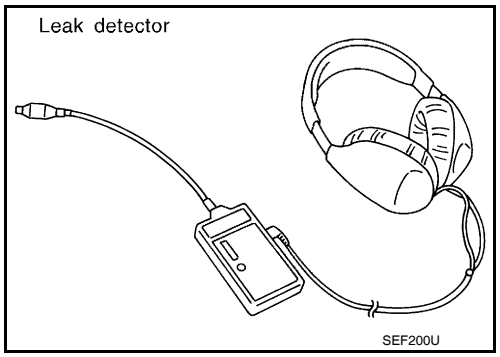

WITHOUT CONSULT-III

1. Attach the EVAP service port adapter securely to the EVAP service port.
2. Also attach the pressure pump with pressure gauge to the EVAP service port adapter.

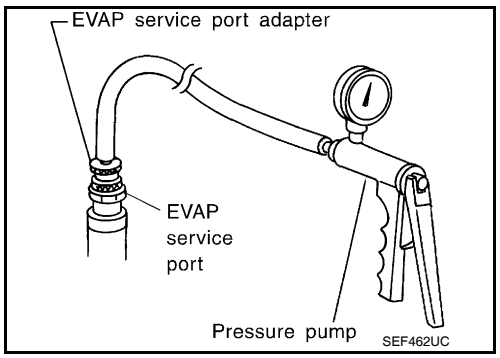

3. Apply battery voltage to the terminal of EVAP canister vent control valve (3) to make a closed EVAP system.
   - This illustration is a view from under vehicle
   - EVAP control system pressure sensor (1)
   - EVAP canister (2)

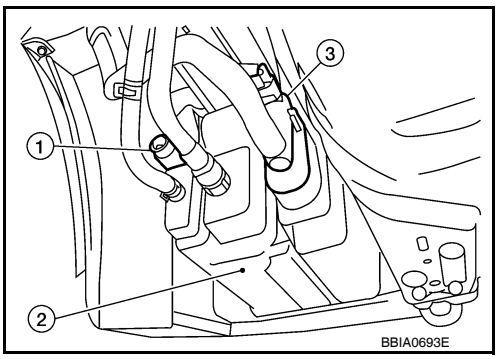

4. To locate the leak, deliver positive pressure to the EVAP system until pressure gauge points reach 1.38 to 2.76 kPa (0.014 to 0.028 kg/cm^2, 0.2 to 0.4 psi).
5. Remove EVAP service port adapter and hose with pressure pump.
6. Locate the leak using a leak detector. Refer to EC-600, "Description".

ON BOARD REFUELING VAPOR RECOVERY (ORVR)

System Description

INFOID:0000000005285154

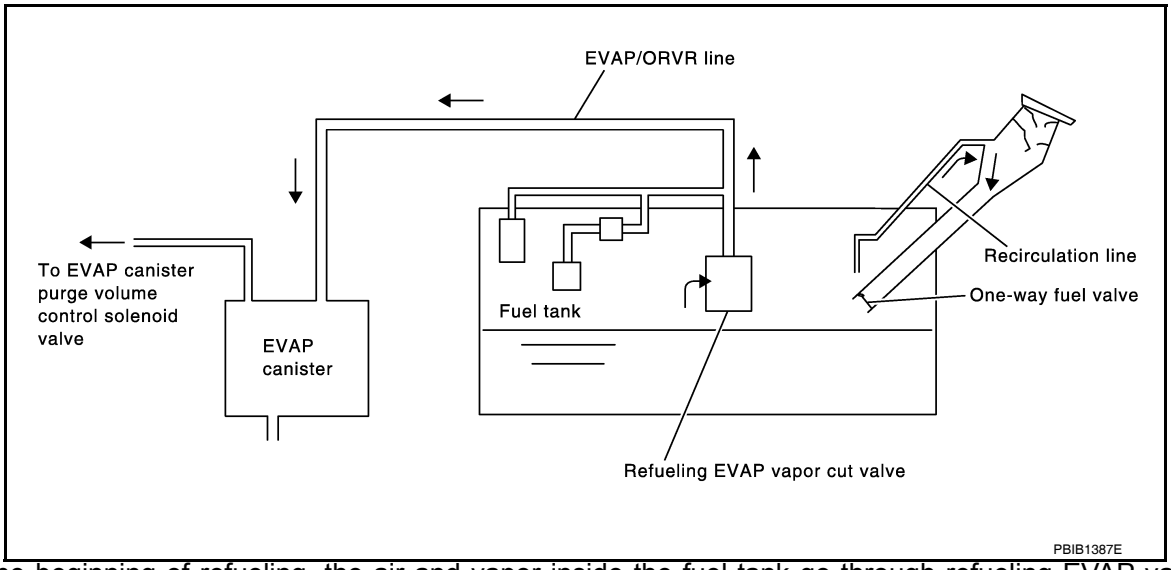

From the beginning of refueling, the air and vapor inside the fuel tank go through refueling EVAP vapor cut valve and EVAP/ORVR line to the EVAP canister. The vapor is absorbed by the EVAP canister and the air is released to the atmosphere.

When the refueling has reached the full level of the fuel tank, the refueling EVAP vapor cut valve is closed and refueling is stopped because of auto shut-off. The vapor which was absorbed by the EVAP canister is purged during driving.

WARNING:

When conducting inspections below, be sure to observe the following:

- **Put a "CAUTION: FLAMMABLE" sign in workshop.**
- **Do not smoke while servicing fuel system. Keep open flames and sparks away from work area.**
- **Be sure to furnish the workshop with a CO_2 fire extinguisher.**

CAUTION:

- **Before removing fuel line parts, carry out the following procedures:**
  - **Put drained fuel in an explosion-proof container and put lid on securely.**
  - **Release fuel pressure from fuel line. Refer to EC-656, "Fuel Pressure Check".**
  - **Disconnect negative battery cable.**
- **Always replace O-ring when the fuel gauge retainer is removed.**
- **Do not kink or twist hose and tube when they are installed.**
- **Do not tighten hose and clamps excessively to avoid damaging hoses.**
- **After installation, run engine and check for fuel leaks at connection.**
- **Do not attempt to top off the fuel tank after the fuel pump nozzle shuts off automatically. Continued refueling may cause fuel overflow, resulting in fuel spray and possibly a fire.**

Diagnosis Procedure

INFOID:0000000005285155

SYMPTOM: FUEL ODOR FROM EVAP CANISTER IS STRONG.

1. CHECK EVAP CANISTER

1. Remove EVAP canister with EVAP canister vent control valve and EVAP control system pressure sensor attached.
2. Weigh the EVAP canister with EVAP canister vent control valve and EVAP control system pressure sensor attached.
   The weight should be less than 1.9 kg (4.2 lb).

OK or NG

OK >> GO TO 2.
NG >> GO TO 3.

2. CHECK IF EVAP CANISTER SATURATED WITH WATER

Does water drain from the EVAP canister?

Yes or No

Yes >> GO TO 3.
No >> GO TO 6.

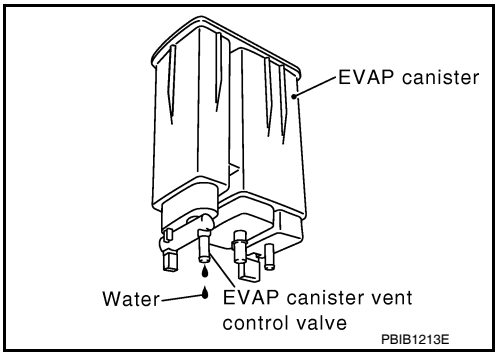

3. REPLACE EVAP CANISTER

Replace EVAP canister with a new one.

>> GO TO 4.

4. CHECK DRAIN FILTER

Refer to EC-610, "Component Inspection".

OK or NG

OK >> GO TO 5.
NG >> Replace drain filter.

5. DETECT MALFUNCTIONING PART

Check the EVAP hose between EVAP canister and vehicle frame for clogging or poor connection.

>> Repair or replace EVAP hose.

6. CHECK REFUELING EVAP VAPOR CUT VALVE

Refer to EC-610, "Component Inspection".

OK or NG

OK >> **INSPECTION END**
NG >> Replace refueling EVAP vapor cut valve with fuel tank.

SYMPTOM: CANNOT REFUEL/FUEL ODOR FROM THE FUEL FILLER OPENING IS STRONG WHILE REFUELING.

1. CHECK EVAP CANISTER

1. Remove EVAP canister with EVAP canister vent control valve and EVAP control system pressure sensor attached.
2. Weigh the EVAP canister with EVAP canister vent control valve and EVAP control system pressure sensor attached.
   The weight should be less than 1.9 kg (4.2 lb).

OK or NG

OK >> GO TO 2.
NG >> GO TO 3.

2. CHECK IF EVAP CANISTER SATURATED WITH WATER

Does water drain from the EVAP canister?

Yes or No

Yes >> GO TO 3.
No >> GO TO 5.

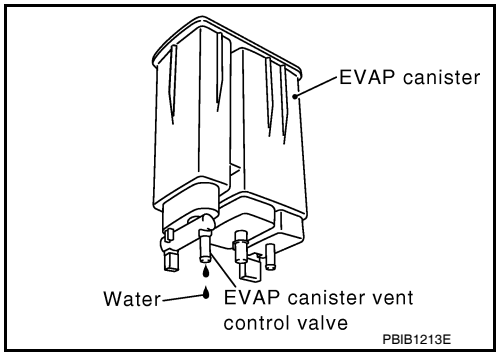

3. REPLACE EVAP CANISTER

Replace EVAP canister with a new one.

>> GO TO 4.

4. CHECK DRAIN FILTER

Refer to EC-610, "Component Inspection".

OK or NG

OK >> GO TO 5.
NG >> Replace drain filter.

5. DETECT MALFUNCTIONING PART

Check the EVAP hose between EVAP canister and vehicle frame for clogging or poor connection.

>> Repair or replace EVAP hose.

6. CHECK VENT HOSES AND VENT TUBES

Check hoses and tubes between EVAP canister and refueling EVAP vapor cut valve for clogging, kink, looseness and improper connection.

OK or NG

OK >> GO TO 7.
NG >> Repair or replace hoses and tubes.

7. CHECK FILLER NECK TUBE

Check recirculation line for clogging, dents and cracks.

OK or NG

OK >> GO TO 8.
NG >> Replace filler neck tube.

8. CHECK REFUELING EVAP VAPOR CUT VALVE

Refer to EC-610, "Component Inspection".

OK or NG

OK >> GO TO 9.
NG >> Replace refueling EVAP vapor cut valve with fuel tank.

9. CHECK FUEL FILLER TUBE

Check filler neck tube and hose connected to the fuel tank for clogging, dents and cracks.

OK or NG

OK >> GO TO 10.
NG >> Replace fuel filler tube.

10. CHECK ONE-WAY FUEL VALVE-I

Check one-way valve for clogging.

OK or NG

OK >> GO TO 11.

NG >> Repair or replace one-way fuel valve with fuel tank.

11. CHECK ONE-WAY FUEL VALVE-II

1. Make sure that fuel is drained from the tank.
2. Remove fuel filler tube and hose.
3. Check one-way fuel valve for operation as follows.
   When a stick is inserted, the valve should open, when removing stick it should close.
   Do not drop any material into the tank.

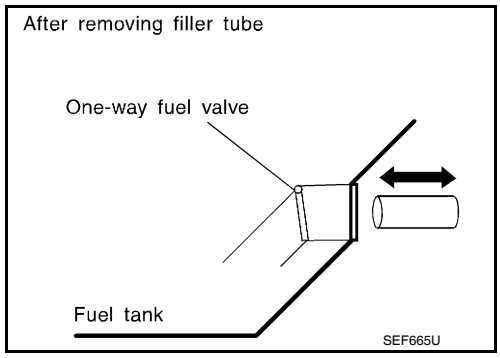

OK or NG

OK >> **INSPECTION END**
NG >> Replace fuel filler tube or replace one-way fuel valve with fuel tank.

Component Inspection

INFOID:0000000005285156

REFUELING EVAP VAPOR CUT VALVE

WITH CONSULT-III

1. Remove fuel tank. Refer to FL-10.
2. Drain fuel from the tank as follows:
a. Remove fuel feed hose located on the fuel gauge retainer.
b. Connect a spare fuel hose, one side to fuel gauge retainer where the hose was removed and the other side to a fuel container.
c. Drain fuel using “FUEL PUMP RELAY” in “ACTIVE TEST” mode with CONSULT-III.
3. Check refueling EVAP vapor cut valve for being stuck to close as follows.
   Blow air into the refueling EVAP vapor cut valve (from the end of EVAP/ORVR line hose), and check that the air flows freely into the tank.
4. Check refueling EVAP vapor cut valve for being stuck to open as follows.
a. Connect vacuum pump to hose end.
b. Remove fuel gauge retainer with fuel gauge unit.
   Always replace O-ring with new one.
c. Put fuel tank upside down.
d. Apply vacuum pressure to hose end [–13.3 kPa (–100 mmHg, –3.94 inHg)] with fuel gauge retainer remaining open and check that the pressure is applicable.

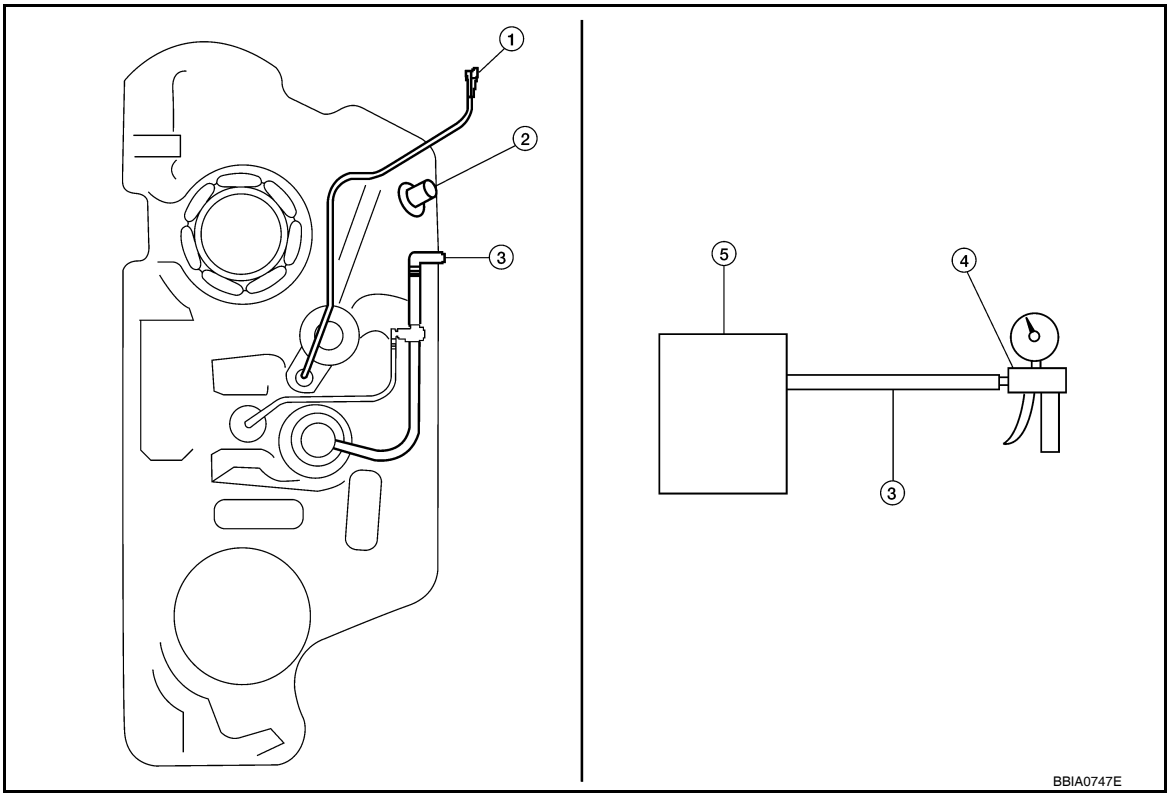

1. Recirculation line
2. Filler tube
3. EVAP/ORVR line
4. Vacuum/pressure handy pump
5. Fuel tank

WITHOUT CONSULT-III

1. Remove fuel tank. Refer to FL-10.
2. Drain fuel from the tank as follows:

a. Remove fuel gauge retainer.
b. Drain fuel from the tank using a handy pump into a fuel container.

3. Check refueling EVAP vapor cut valve for being stuck to close as follows.
   Blow air into the refueling EVAP vapor cut valve (from the end of EVAP/ORVR line hose), and check that the air flows freely into the tank.
4. Check refueling EVAP vapor cut valve for being stuck to open as follows.

a. Connect vacuum pump to hose end.
b. Remove fuel gauge retainer with fuel gauge unit.
   Always replace O-ring with new one.
c. Put fuel tank upside down.
d. Apply vacuum pressure to hose end [–13.3 kPa (–100 mmHg, –3.94 inHg)] with fuel gauge retainer remaining open and check that the pressure is applicable.

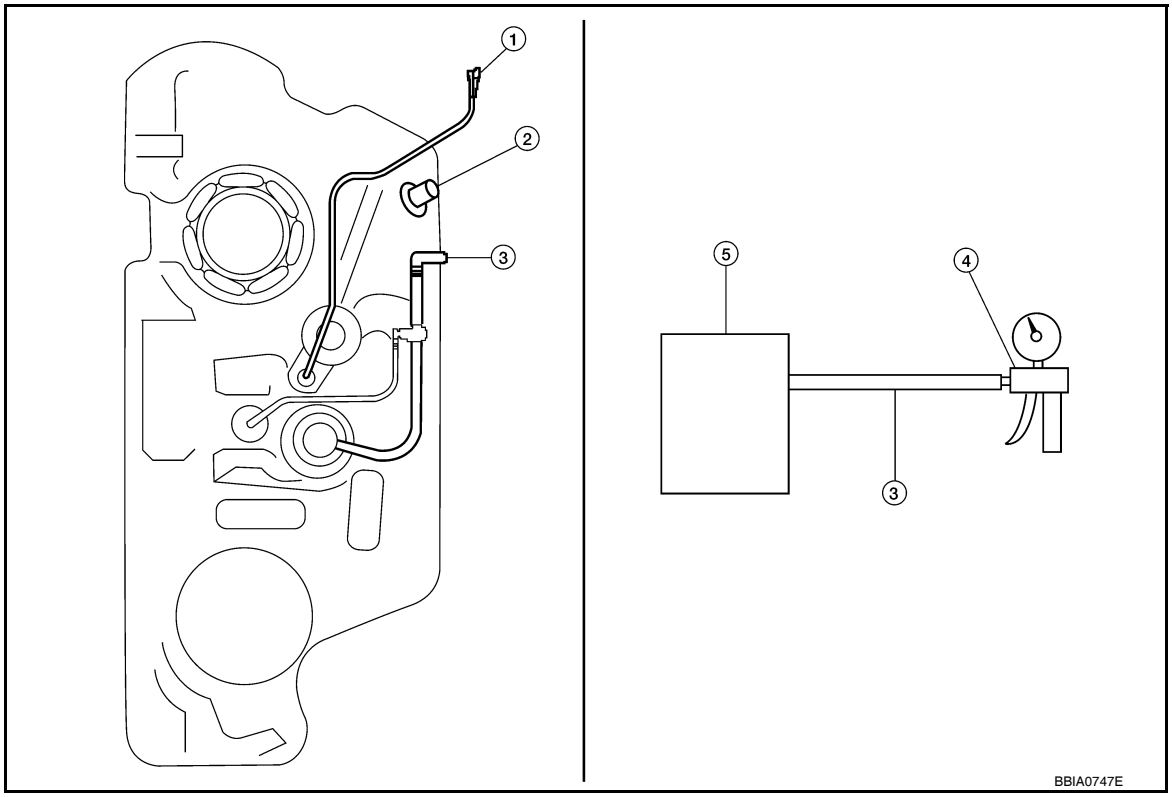

1. Recirculation line
2. Filler tube
3. EVAP/ORVR line
4. Vacuum/pressure handy pump
5. Fuel tank

DRAIN FILTER

1. Check visually for insect nests in the drain filter air inlet.
2. Check visually for cracks or flaws in the appearance.
3. Check visually for cracks or flaws in the hose.
4. Blow air into port A and check that it flows freely out of port B.
5. Block port B.
6. Blow air into port A and check that there is no leakage.
7. If NG, replace drain filter.

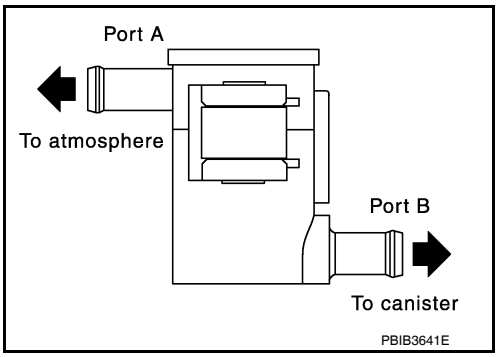

POSITIVE CRANKCASE VENTILATION

Description

INFOID:0000000005285157

SYSTEM DESCRIPTION

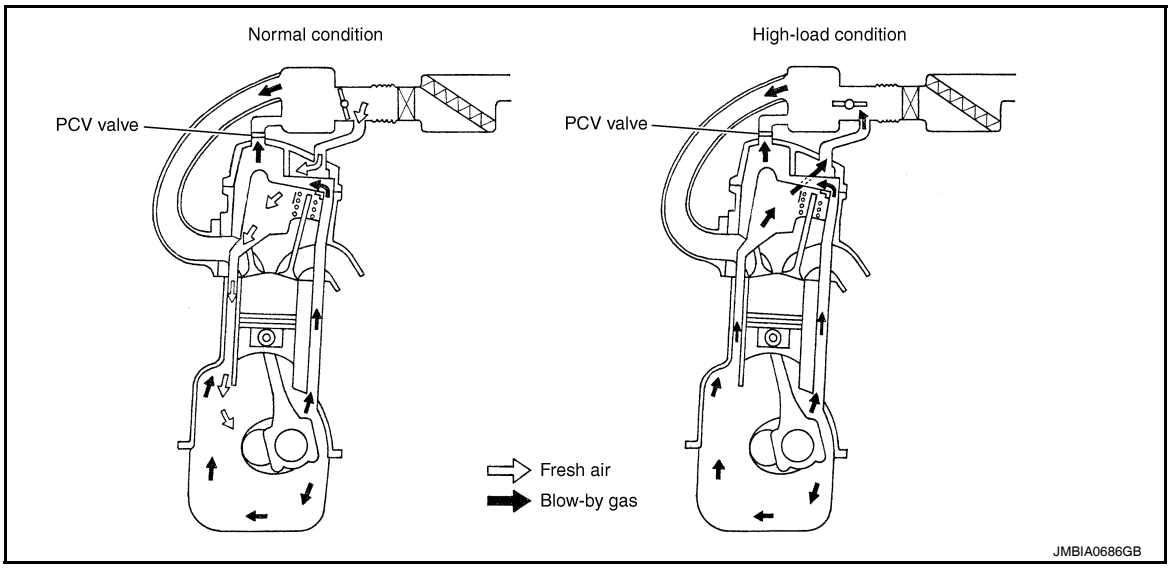

This system returns blow-by gas to the intake manifold.
The positive crankcase ventilation (PCV) valve is provided to conduct crankcase blow-by gas to the intake manifold. During partial throttle operation of the engine, the intake manifold sucks the blow-by gas through the PCV valve. Normally, the capacity of the valve is sufficient to handle any blow-by and a small amount of ventilating air. The ventilating air is then drawn from the air inlet tubes into the crankcase. In this process the air passes through the hose connecting air inlet tubes to rocker cover.
Under full-throttle condition, the manifold vacuum is insufficient to draw the blow-by flow through the valve. The flow goes through the hose connection in the reverse direction.
On vehicles with an excessively high blow-by, the valve does not meet the requirement. This is because some of the flow will go through the hose connection to the air inlet tubes under all conditions.

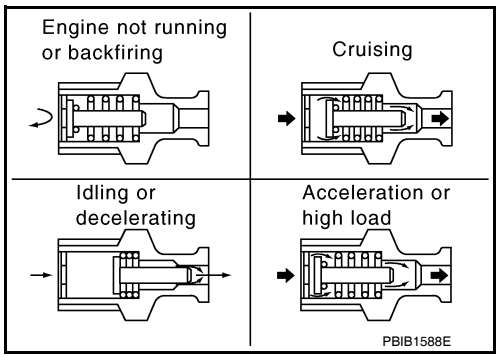

Component Inspection

INFOID:0000000005285158

PCV (POSITIVE CRANKCASE VENTILATION) VALVE

With engine running at idle, remove PCV valve from rocker cover. A properly working valve makes a hissing noise as air passes through it. A strong vacuum should be felt immediately when a finger is placed over valve inlet.

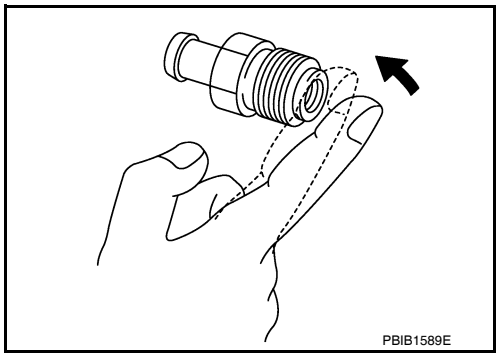

PCV VALVE VENTILATION HOSE

1. Check hoses and hose connections for leaks.
2. Disconnect all hoses and clean with compressed air. If any hose cannot be freed of obstructions, replace.

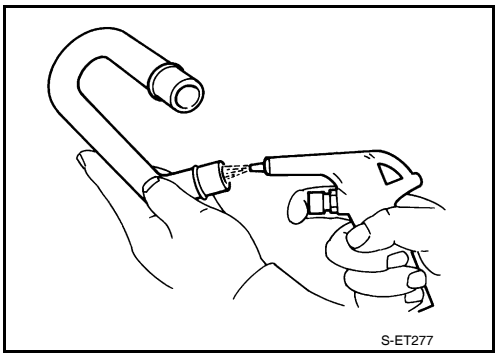

NVIS (NISSAN VEHICLE IMMOBILIZER SYSTEM-NATS)

Description

INFOID:0000000005285159

- **If the security indicator illuminates with the ignition switch ON or DTC P1610 - P1615 is displayed in "SELF DIAGNOSTIC RESULT" mode, perform the trouble diagnosis for corresponding to the detected DTC. Refer to EC-583, "P1610-P1615".**
- **Check that no DTC is displayed in "SELF DIAGNOSIS RESULT" mode of "BCM" before erasing the detected DTC in "ENGINE" mode with CONSULT-III.**
- **When replacing ECM, refer to EC-653, "Procedure After Replacing ECM".**

ON BOARD DIAGNOSTIC (OBD) SYSTEM

Introduction

INFOID:0000000005285160

The ECM has an on board diagnostic system, which detects malfunctions related to engine sensors or actuators. The ECM also records various emission-related diagnostic information including:

Emission-related diagnostic information	Diagnostic service
Diagnostic Trouble Code (DTC)	Service $03 of SAE J1979/ISO 15031-5
Freeze Frame data	Service $02 of SAE J1979/ISO 15031-5
System Readiness Test (SRT) code	Service $01 of SAE J1979/ISO 15031-5
1st trip Diagnostic Trouble Code (1st Trip DTC)	Service $07 of SAE J1979/ISO 15031-5
1st trip Freeze Frame data	—
Test values and Test limits	Service $06 of SAE J1979/ISO 15031-5
Calibration ID	Service $09 of SAE J1979/ISO 15031-5
Permanent Diagnostic Trouble Code (Permanent DTC)	Service $0A* of SAE J1979/ISO 15031-5

*: Service $0A is not applied for regions where it is not mandated.

The above information can be checked using procedures listed in the table below.

×: Applicable —: Not applicable

	DTC	1st trip DTC	Freeze Frame data	1st trip Freeze Frame data	SRT code	SRT status	Test value	Permanent DTC status
CONSULT-III	×	×	×	×	×	×	—	×
GST	×	×	×	—	×	×	×	×
ECM	×	×*	—	—	—	×	—	—

*: When DTC and 1st trip DTC simultaneously appear on the display, they cannot be clearly distinguished from each other.

The malfunction indicator lamp (MIL) on the instrument panel lights up when the same malfunction is detected in two consecutive trips (Two trip detection logic), or when the ECM enters fail-safe mode.
(Refer to EC-664, "Fail-Safe Chart".)

Two Trip Detection Logic

INFOID:0000000005285161

When a malfunction is detected for the first time, 1st trip DTC and 1st trip Freeze Frame data are stored in the ECM memory. The MIL will not light up at this stage. <1st trip>
If the same malfunction is detected again during the next drive, the DTC and Freeze Frame data are stored in the ECM memory, and the MIL lights up. The MIL lights up at the same time when the DTC is stored. <2nd trip> The “trip” in the “Two Trip Detection Logic” means a driving mode in which self-diagnosis is performed during vehicle operation. Specific on board diagnostic items will cause the ECM to light up or blink the MIL, and store DTC and Freeze Frame data, even in the 1st trip, as shown below.

×: Applicable —: Not applicable

Items	MIL				DTC		1st trip DTC	
	1st trip		2nd trip		1st trip displaying	2nd trip displaying	1st trip displaying	2nd trip display-ing
	Blinking	Lighting up	Blinking	Lighting up				
Misfire (Possible three way catalyst damage) — DTC: P0300 - P0304 is being detected	×	—	—	—	—	—	×	—
Misfire (Possible three way catalyst damage) — DTC: P0300 - P0304 is being detected	—	—	×	—	—	×	—	—
One trip detection diagnoses (Refer to EC-617, "Emission-related Diagnostic Information".)	—	×	—	—	×	—	—	—
Except above	—	—	—	×	—	×	×	—

When there is an open circuit on MIL circuit, the ECM cannot warn the driver by MIL lighting up when there is malfunction on engine control system.
Therefore, when electrical controlled throttle and part of ECM related diagnoses are continuously detected as NG for 5 trips, ECM warns the driver that engine control system malfunctions and MIL circuit is open by means of operating fail-safe function.
The fail-safe function also operates when above diagnoses except MIL circuit are detected, and demands the driver to repair the malfunction.

Engine operating condition in fail-safe mode	Engine speed will not rise more than 2,500 rpm due to the fuel cut

Emission-related Diagnostic Information

INFOID:0000000005285162

EMISSION-RELATED DIAGNOSTIC INFORMATION ITEMS

×: Applicable —: Not applicable

Items (CONSULT-III screen terms)	DTC*1		SRT code	Trip	MIL	Permanent DTC group*4	Reference
	CONSULT-III GST*2	ECM*3					
LOST COMM (TCM)	U0101	0101*5	—	1	×	B	EC-713
LOST COMM (BCM)	U0140	0140*5	—	1	×	B	EC-715
CAN COMM CIRCUIT	U1001	1001*5	—	2	—	—	EC-717
NO DTC IS DETECTED. FURTHER TESTING MAY BE REQUIRED.	**P0000**	**0000**	—	—	**Flashing*6**	—	EC-639
INT/V TIM CONT-B1	P0011	0011	×	2	×	B	EC-719
A/F SEN1 HTR (B1)	P0031	0031	—	2	×	B	EC-723
A/F SEN1 HTR (B1)	P0032	0032	—	2	×	B	EC-723
HO2S2 HTR (B1)	P0037	0037	—	2	×	B	EC-728
HO2S2 HTR (B1)	P0038	0038	—	2	×	B	EC-728
INT/V TIM V/CIR-B1	P0075	0075	—	2	×	B	EC-734
MAF SEN/CIRCUIT-B1	P0101	0101	—	2	×	B	EC-739
MAF SEN/CIRCUIT-B1	P0102	0102	—	1	×	B	EC-747
MAF SEN/CIRCUIT-B1	P0103	0103	—	1	×	B	EC-747
IAT SEN/CIRCUIT-B1	P0112	0112	—	2	×	B	EC-754
IAT SEN/CIRCUIT-B1	P0113	0113	—	2	×	B	EC-754
ECT SEN/CIRC	P0116	0116	—	2	×	B	EC-758
ECT SEN/CIRC	P0117	0117	—	1	×	B	EC-761
ECT SEN/CIRC	P0118	0118	—	1	×	B	EC-761
TP SEN 2/CIRC-B1	P0122	0122	—	1	×	B	EC-766
TP SEN 2/CIRC-B1	P0123	0123	—	1	×	B	EC-766
ECT SENSOR	P0125	0125	—	2	×	B	EC-771
IAT SENSOR-B1	P0127	0127	—	2	×	B	EC-774
THERMSTAT FNCTN	P0128	0128	—	2	×	B	EC-777
A/F SENSOR1 (B1)	P0130	0130	—	2	×	A	EC-779
A/F SENSOR1 (B1)	P0131	0131	—	2	×	B	EC-785
A/F SENSOR1 (B1)	P0132	0132	—	2	×	B	EC-791
A/F SENSOR1 (B1)	P0133	0133	×	2	×	A	EC-797
HO2S2 (B1)	P0137	0137	×	2	×	A	EC-804
HO2S2 (B1)	P0138	0138	×	2	×	A	EC-811
HO2S2 (B1)	P0139	0139	×	2	×	A	EC-820

Items (CONSULT-III screen terms)	DTC*1		SRT code	Trip	MIL	Permanent DTC group*4	Reference
	CONSULT-III GST*2	ECM*3					
FUEL SYS-LEAN-B1	P0171	0171	—	2	×	B	EC-828
FUEL SYS-RICH-B1	P0172	0172	—	2	×	B	EC-834
FTT SENSOR	P0181	0181	—	2	×	B	EC-840
FTT SEN/CIRCUIT	P0182	0182	—	2	×	B	EC-844
FTT SEN/CIRCUIT	P0183	0183	—	2	×	B	EC-844
EOT SEN/CIRCUIT	P0196	0196	—	2	×	B	EC-848
EOT SEN/CIRCUIT	P0197	0197	—	2	×	B	EC-851
EOT SEN/CIRCUIT	P0198	0198	—	2	×	B	EC-851
TP SEN 1/CIRC-B1	P0222	0222	—	1	×	B	EC-855
TP SEN 1/CIRC-B1	P0223	0223	—	1	×	B	EC-855
MULTI CYL MISFIRE	P0300	0300	—	1 or 2	×	B	EC-860
CYL 1 MISFIRE	P0301	0301	—	1 or 2	×	B	EC-860
CYL 2 MISFIRE	P0302	0302	—	1 or 2	×	B	EC-860
CYL 3 MISFIRE	P0303	0303	—	1 or 2	×	B	EC-860
CYL 4 MISFIRE	P0304	0304	—	1 or 2	×	B	EC-860
KNOCK SEN/CIRC-B1	P0327	0327	—	2	—	—	EC-866
KNOCK SEN/CIRC-B1	P0328	0328	—	2	—	—	EC-866
CKP SEN/CIRCUIT	P0335	0335	—	2	×	B	EC-870
CMP SEN/CIRC-B1	P0340	0340	—	2	×	B	EC-876
TW CATALYST SYS-B1	P0420	0420	×	2	×	A	EC-882
EVAP PURG FLOW/MON	P0441	0441	×	2	×	A	EC-887
EVAP SMALL LEAK	P0442	0442	×	2	×	A	EC-892
PURG VOLUME CONT/V	P0443	0443	—	2	×	A	EC-899
PURG VOLUME CONT/V	P0444	0444	—	2	×	B	EC-907
PURG VOLUME CONT/V	P0445	0445	—	2	×	B	EC-907
VENT CONTROL VALVE	P0447	0447	—	2	×	B	EC-913
VENT CONTROL VALVE	P0448	0448	—	2	×	B	EC-919
EVAP SYS PRES SEN	P0451	0451	—	2	×	A	EC-925
EVAP SYS PRES SEN	P0452	0452	—	2	×	B	EC-928
EVAP SYS PRES SEN	P0453	0453	—	2	×	B	EC-935
EVAP GROSS LEAK	P0455	0455	—	2	×	A	EC-943
EVAP VERY SML LEAK	P0456	0456	×*7	2	×	A	EC-950
FUEL LEV SEN SLOSH	P0460	0460	—	2	×	A	EC-958
FUEL LEVEL SENSOR	P0461	0461	—	2	×	B	EC-960
FUEL LEVL SEN/CIRC	P0462	0462	—	2	×	B	EC-962
FUEL LEVL SEN/CIRC	P0463	0463	—	2	×	B	EC-962
VEH SPEED SEN/CIRC*8	P0500	0500	—	2	×	B	EC-964
ISC SYSTEM	P0506	0506	—	2	×	B	EC-966
ISC SYSTEM	P0507	0507	—	2	×	B	EC-968
ECM BACK UP/CIRCUIT	P0603	0603	—	2	×	B	EC-970
ECM	P0605	0605	—	1 or 2	— or ×	B	EC-973

Items (CONSULT-III screen terms)	DTC*1		SRT code	Trip	MIL	Permanent DTC group*4	Reference
	CONSULT-III GST*2	ECM*3					
ECM	P0607	0607	—	1 (CVT) 2 (M/T)	× (CVT) — (M/T)	B	EC-975
SENSOR POWER/CIRC	P0643	0643	—	1	×	B	EC-976
T/M RANGE SENSOR A	P0705	0705	—	2	×	B	CVT-60
FLUID TEMP SENSOR A*9	P0710	0710	—	1	×	B	CVT-65
INPUT SPEED SENSOR A	P0715	0715	—	2	×	B	CVT-70
OUTPUT SPEED SENSOR*8	P0720	0720	—	2	×	B	CVT-75
TORQUE CONVERTER	P0740	0740	—	2	×	B	CVT-83
TORQUE CONVERTER	P0744	0744	—	2	×	B	CVT-88
PC SOLENOID A	P0745	0745	—	2	×	B	CVT-90
PC SOLENOID A	P0746	0746	—	1	×	B	CVT-95
PC SOLENOID B	P0776	0776	—	2	×	B	CVT-97
PC SOLENOID B	P0778	0778	—	2	×	B	CVT-99
FLUID PRESS SEN/SW A	P0840	0840	—	2	×	B	CVT-109
P-N POS SW/CIRCUIT	P0850	0850	—	2	×	B	EC-981
CLOSED LOOP-B1	P1148	1148	—	1	×	A	EC-986
TCS/CIRC	P1212	1212	—	2	—	—	EC-987
ENG OVER TEMP	P1217	1217	—	1	×	B	EC-988
CTP LEARNING-B1	P1225	1225	—	2	—	—	EC-1000
CTP LEARNING-B1	P1226	1226	—	2	—	—	EC-1002
COLD START CONTROL	P1421	1421	—	2	×	A	EC-1004
ASCD SW	P1564	1564	—	1	—	—	EC-1006
ASCD BRAKE SW	P1572	1572	—	1	—	—	EC-1012
ASCD VHL SPD SEN	P1574	1574	—	1	—	—	EC-1021
LOCK MODE	P1610	1610	—	2	—	—	BL-170
ID DISCORD,IMMU-ECM	P1611	1611	—	2	—	—	BL-170
CHAIN OF ECM-IMMU	P1612	1612	—	2	—	—	BL-170
CHAIN OF IMMU-KEY	P1614	1614	—	2	—	—	BL-170
DIFFERENCE OF KEY	P1615	1615	—	2	—	—	BL-170
IN PULY SPEED	P1715	1715	—	2	—	—	EC-1023
SLCT SOLENOID	P1740	1740	—	2	×	B	CVT-128
STEP MOTOR	P1777	1777	—	1	×	B	CVT-134
STEP MOTOR	P1778	1778	—	2	×	B	CVT-138
BRAKE SW/CIRCUIT	P1805	1805	—	2	—	—	EC-1025
ETC MOT PWR-B1	P2100	2100	—	1	×	B	EC-1029
ETC FNCTN/CIRC-B1	P2101	2101	—	1	×	B	EC-1033
ETC MOT PWR	P2103	2103	—	1	×	B	EC-1029
ETC MOT-B1	P2118	2118	—	1	×	B	EC-1039
ETC ACTR-B1	P2119	2119	—	1	×	B	EC-1043
APP SEN 1/CIRC	P2122	2122	—	1	×	B	EC-1045
APP SEN 1/CIRC	P2123	2123	—	1	×	B	EC-1045
APP SEN 2/CIRC	P2127	2127	—	1	×	B	EC-1050

Items (CONSULT-III screen terms)	DTC*1		SRT code	Trip	MIL	Permanent DTC group*4	Reference
	CONSULT-III GST*2	ECM*3					
APP SEN 2/CIRC	P2128	2128	—	1	×	B	EC-1050
TP SENSOR-B1	P2135	2135	—	1	×	B	EC-1057
APP SENSOR	P2138	2138	—	1	×	B	EC-1062
A/F SENSOR1 (B1)	P2A00	2A00	—	2	×	A	EC-1069

*1: 1st trip DTC No. is the same as DTC No.

*2: This number is prescribed by SAE J2012/ISO 15031-6.

*3: In Diagnostic Test Mode II (Self-diagnostic results), this number is controlled by NISSAN.

*4: Refer to EC-617, "Emission-related Diagnostic Information", “PERMANENT DIAGNOSTIC TROUBLE CODE (PERMANENT DTC)”.

*5: The troubleshooting for this DTC needs CONSULT-III.

*6: When the ECM in the mode of displaying SRT status, MIL may flash. For the details, refer to "How to Display SRT Status".

*7: SRT code will not be set if the self-diagnostic result is NG.

*8: When the fail-safe operations for both self-diagnoses occur, the MIL illuminates.

*9: When erasing this DTC, always use CONSULT-III or GST.

DTC AND 1ST TRIP DTC

The 1st trip DTC (whose number is the same as the DTC number) is displayed for the latest self-diagnostic result obtained. If the ECM memory was cleared previously, and the 1st trip DTC did not reoccur, the 1st trip DTC will not be displayed.

If a malfunction is detected during the 1st trip, the 1st trip DTC is stored in the ECM memory. The MIL will not light up (two trip detection logic). If the same malfunction is not detected in the 2nd trip (meeting the required driving pattern), the 1st trip DTC is cleared from the ECM memory. If the same malfunction is detected in the 2nd trip, both the 1st trip DTC and DTC are stored in the ECM memory and the MIL lights up. In other words, the DTC is stored in the ECM memory and the MIL lights up when the same malfunction occurs in two consecutive trips. If a 1st trip DTC is stored and a non-diagnostic operation is performed between the 1st and 2nd trips, only the 1st trip DTC will continue to be stored. For malfunctions that blink or light up the MIL during the 1st trip, the DTC and 1st trip DTC are stored in the ECM memory.

Procedures for clearing the DTC and the 1st trip DTC from the ECM memory are described in "HOW TO ERASE EMISSION-RELATED DIAGNOSTIC INFORMATION".

For malfunctions in which 1st trip DTCs are displayed, refer to "EMISSION-RELATED DIAGNOSTIC INFORMATION ITEMS". These items are required by legal regulations to continuously monitor the system/component. In addition, the items monitored non-continuously are also displayed on CONSULT-III.

1st trip DTC is specified in Service $07 of SAE J1979/ISO 15031-5. 1st trip DTC detection occurs without lighting up the MIL and therefore does not warn the driver of a malfunction. However, 1st trip DTC detection will not prevent the vehicle from being tested, for example during Inspection/Maintenance (I/M) tests.

When a 1st trip DTC is detected, check, print out or write down and erase (1st trip) DTC and Freeze Frame data as specified in Work Flow procedure Step 2, refer to EC-659, "Trouble Diagnosis Introduction". Then perform DTC Confirmation Procedure or Overall Function Check to try to duplicate the malfunction. If the malfunction is duplicated, the item requires repair.

How to Read DTC and 1st Trip DTC

DTC and 1st trip DTC can be read by the following methods.

WITH CONSULT-III

WITH GST

CONSULT-III or GST (Generic Scan Tool) Examples: P0340, P0850, P1148, etc.

These DTCs are prescribed by SAE J2012/ISO 15031-6.

(CONSULT-III also displays the malfunctioning component or system.)

NO TOOLS

The number of blinks of the MIL in the Diagnostic Test Mode II (Self-Diagnostic Results) indicates the DTC. Example: 0340, 0850, 1148, etc.

These DTCs are controlled by NISSAN.

- **1st trip DTC No. is the same as DTC No.**
- **Output of a DTC indicates a malfunction. However, GST or the Diagnostic Test Mode II do not indicate whether the malfunction is still occurring or has occurred in the past and has returned to normal. CONSULT-III can identify malfunction status as shown below. Therefore, using CONSULT-III (if available) is recommended.**

DTC or 1st trip DTC of a malfunction is displayed in SELF-DIAGNOSTIC RESULTS mode of CONSULT-III. Time data indicates how many times the vehicle was driven after the last detection of a DTC.
If the DTC is being detected currently, the time data will be [0].
If a 1st trip DTC is stored in the ECM, the time data will be [1t].

FREEZE FRAME DATA AND 1ST TRIP FREEZE FRAME DATA

The ECM records the driving conditions such as fuel system status, calculated load value, engine coolant temperature, short term fuel trim, long term fuel trim, engine speed, vehicle speed, absolute throttle position, base fuel schedule and intake air temperature at the moment a malfunction is detected.
Data which are stored in the ECM memory, along with the 1st trip DTC, are called 1st trip freeze frame data. The data, stored together with the DTC data, are called freeze frame data and displayed on CONSULT-III or GST. The 1st trip freeze frame data can only be displayed on the CONSULT-III screen, not on the GST. For details, see EC-686, "CONSULT-III Function (ENGINE)".
Only one set of freeze frame data (either 1st trip freeze frame data or freeze frame data) can be stored in the ECM. 1st trip freeze frame data is stored in the ECM memory along with the 1st trip DTC. There is no priority for 1st trip freeze frame data and it is updated each time a different 1st trip DTC is detected. However, once freeze frame data (2nd trip detection/MIL on) is stored in the ECM memory, 1st trip freeze frame data is no longer stored. Remember, only one set of freeze frame data can be stored in the ECM. The ECM has the following priorities to update the data.

Priority	Items	
1	Freeze frame data	Misfire — DTC: P0300 - P0304 Fuel Injection System Function — DTC: P0171, P0172
2		Except the above items (Includes CVT related items)
3	1st trip freeze frame data	

For example, the EGR malfunction (Priority: 2) was detected and the freeze frame data was stored in the 2nd trip. After that when the misfire (Priority: 1) is detected in another trip, the freeze frame data will be updated from the EGR malfunction to the misfire. The 1st trip freeze frame data is updated each time a different malfunction is detected. There is no priority for 1st trip freeze frame data. However, once freeze frame data is stored in the ECM memory, 1st trip freeze data is no longer stored (because only one freeze frame data or 1st trip freeze frame data can be stored in the ECM). If freeze frame data is stored in the ECM memory and freeze frame data with the same priority occurs later, the first (original) freeze frame data remains unchanged in the ECM memory.
Both 1st trip freeze frame data and freeze frame data (along with the DTCs) are cleared when the ECM memory is erased. Procedures for clearing the ECM memory are described in "EMISSION-RELATED DIAGNOSTIC INFORMATION ITEMS".

SYSTEM READINESS TEST (SRT) CODE

System Readiness Test (SRT) code is specified in Service $01 of SAE J1979.
As part of an enhanced emissions test for Inspection & Maintenance (I/M), certain states require the status of SRT be used to indicate whether the ECM has completed self-diagnosis of major emission systems and components. Completion must be verified in order for the emissions inspection to proceed.
If a vehicle is rejected for a State emissions inspection due to one or more SRT items indicating “INCMP”, use the information in this Service Manual to set the SRT to “CMPLT”.
In most cases the ECM will automatically complete its self-diagnosis cycle during normal usage, and the SRT status will indicate “CMPLT” for each application system. Once set as “CMPLT”, the SRT status remains “CMPLT” until the self-diagnosis memory is erased.
Occasionally, certain portions of the self-diagnostic test may not be completed as a result of the customer's normal driving pattern; the SRT will indicate “INCMP” for these items.
NOTE:
The SRT will also indicate “INCMP” if the self-diagnosis memory is erased for any reason or if the ECM memory power supply is interrupted for several hours.
If, during the state emissions inspection, the SRT indicates “CMPLT” for all test items, the inspector will continue with the emissions test. However, if the SRT indicates “INCMP” for one or more of the SRT items the vehicle is returned to the customer untested.
NOTE:
If permanent DTC is stored or MIL illuminates during the state emissions inspection, the vehicle is also returned to the customer untested even though the SRT indicates “CMPLT” for all test items. Therefore, it is important to check SRT (“CMPLT”), DTC (No DTCs) and permanent DTC (No permanent DTCs) before the inspection.

SRT Item

The table below shows required self-diagnostic items to set the SRT to “CMPLT”.

SRT item (CONSULT-III indication)	Performance Priority*	Required self-diagnostic items to set the SRT to “CMPLT”	Corresponding DTC No.
CATALYST	2	Three way catalyst function	P0420
EVAP SYSTEM	2	EVAP control system purge flow monitoring	P0441
	1	EVAP control system	P0442
	2	EVAP control system	P0456
HO2S	2	Air fuel ratio (A/F) sensor 1	P0133
		Heated oxygen sensor 2	P0137
		Heated oxygen sensor 2	P0138
		Heated oxygen sensor 2	P0139
EGR/VVT SYSTEM	3	Intake value timing control function	P0011

*: If completion of several SRTs is required, perform driving patterns (DTC confirmation procedure), one by one based on the priority for models with CONSULT-III.

SRT Set Timing

SRT is set as “CMPLT” after self-diagnosis has been performed one or more times. Completion of SRT is done regardless of whether the result is OK or NG. The set timing is different between OK and NG results and is shown in the table below.

Self-diagnosis result		Example				
		Diagnosis	Ignition cycle ← ON → OFF	← ON → OFF	← ON → OFF	← ON →
All OK	Case 1	P0400	OK (1)	— (1)	OK (2)	— (2)
		P0402	OK (1)	— (1)	— (1)	OK (2)
		P1402	OK (1)	OK (2)	— (2)	— (2)
		SRT of EGR	“CMPLT”	“CMPLT”	“CMPLT”	“CMPLT”
	Case 2	P0400	OK (1)	— (1)	— (1)	— (1)
		P0402	— (0)	— (0)	OK (1)	— (1)
		P1402	OK (1)	OK (2)	— (2)	— (2)
		SRT of EGR	“INCMP”	“INCMP”	“CMPLT”	“CMPLT”
NG exists	Case 3	P0400	OK	OK	—	—
		P0402	—	—	—	—
		P1402	NG	—	NG	NG (Consecutive NG)
		(1st trip) DTC	1st trip DTC	—	1st trip DTC	DTC (= MIL “ON”)
		SRT of EGR	“INCMP”	“INCMP”	“INCMP”	“CMPLT”

OK: Self-diagnosis is carried out and the result is OK.

NG: Self-diagnosis is carried out and the result is NG.

—: Self-diagnosis is not carried out.

When all SRT related self-diagnoses showed OK results in a single cycle (Ignition OFF-ON-OFF), the SRT will indicate “CMPLT”. → Case 1 above

When all SRT related self-diagnoses showed OK results through several different cycles, the SRT will indicate “CMPLT” at the time the respective self-diagnoses have at least one OK result. → Case 2 above

If one or more SRT related self-diagnoses showed NG results in 2 consecutive cycles, the SRT will also indicate “CMPLT”. → Case 3 above

The table above shows that the minimum number of cycles for setting SRT as “INCMP” is one (1) for each self-diagnosis (Case 1 & 2) or two (2) for one of self-diagnoses (Case 3). However, in preparation for the state

emissions inspection, it is unnecessary for each self-diagnosis to be executed twice (Case 3) for the following reasons:

- The SRT will indicate “CMPLT” at the time the respective self-diagnoses have one (1) OK result.
- The emissions inspection requires “CMPLT” of the SRT only with OK self-diagnosis results.
- When, during SRT driving pattern, 1st trip DTC (NG) is detected prior to “CMPLT” of SRT, the self-diagnosis memory must be erased from ECM after repair.
- If the 1st trip DTC is erased, all the SRT will indicate “INCMP”.

NOTE:
SRT can be set as “CMPLT” together with the DTC(s). Therefore, DTC check must always be carried out prior to the state emission inspection even though the SRT indicates “CMPLT”.

SRT Service Procedure

If a vehicle has failed the state emissions inspection due to one or more SRT items indicating “INCMP”, review the flowchart diagnostic sequence on the next page.

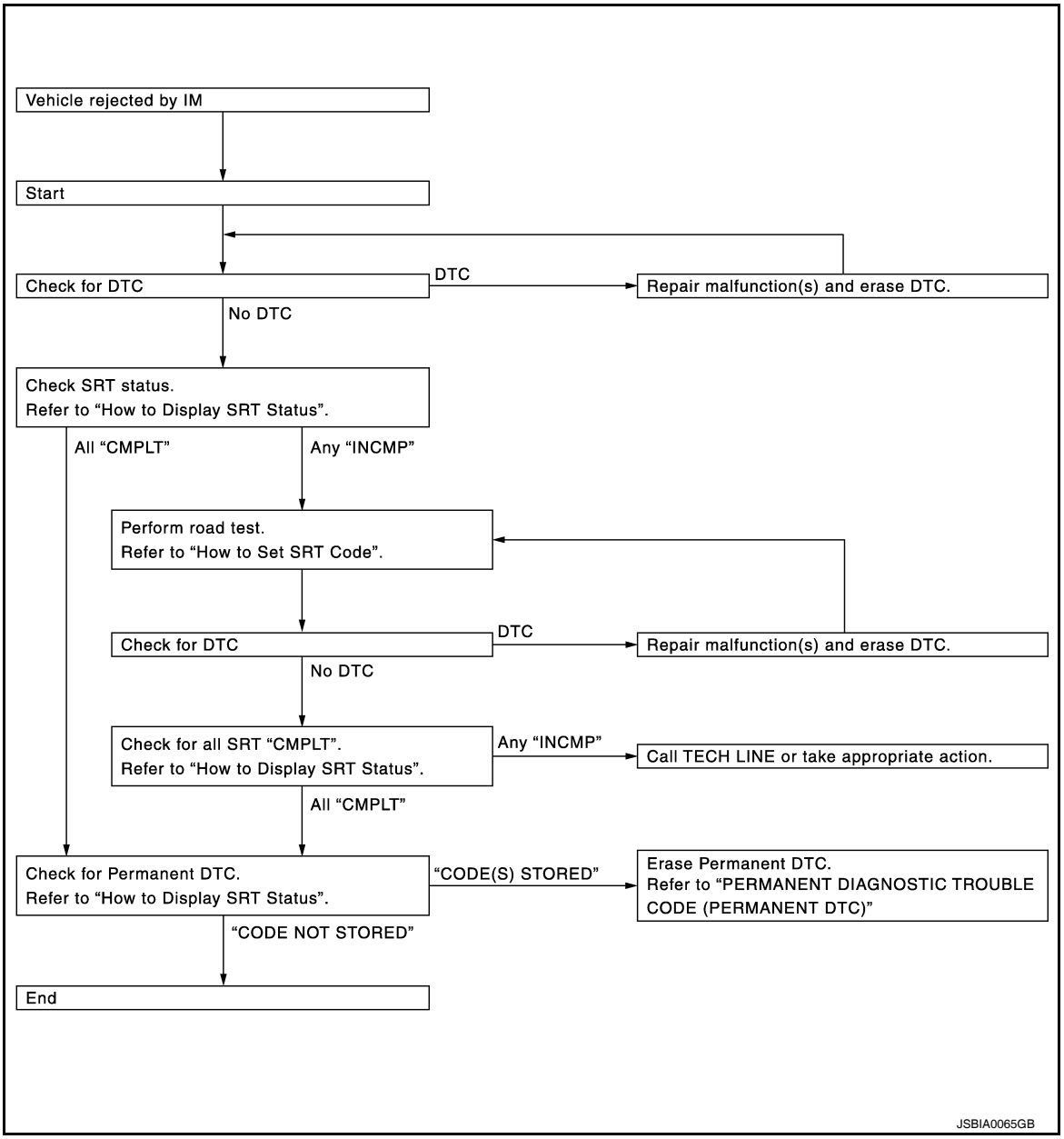

How to Display SRT Status

WITH CONSULT-III

Selecting “SRT STATUS” in “DTC CONFIRMATION” mode with CONSULT-III.
For items whose SRT codes are set, “CMPLT” is displayed on the CONSULT-III screen; for items whose SRT codes are not set, “INCMP” is displayed.

NOTE:
- Though displayed on the CONSULT-III screen, “HO2S HTR” is not SRT item.
- “SRT STATUS” provides the presence or absence of permanent DTCs stored in ECM memory.

WITH GST
Selecting Service $01 with GST (Generic Scan Tool)

NO TOOLS
A SRT code itself cannot be displayed, however SRT status can.

1. Turn ignition switch ON and wait 20 seconds.
2. SRT status is indicated as shown below.
   - When all SRT codes are set, MIL illuminates continuously.
   - When any SRT codes are not set, MIL will blink periodically for 10 seconds.

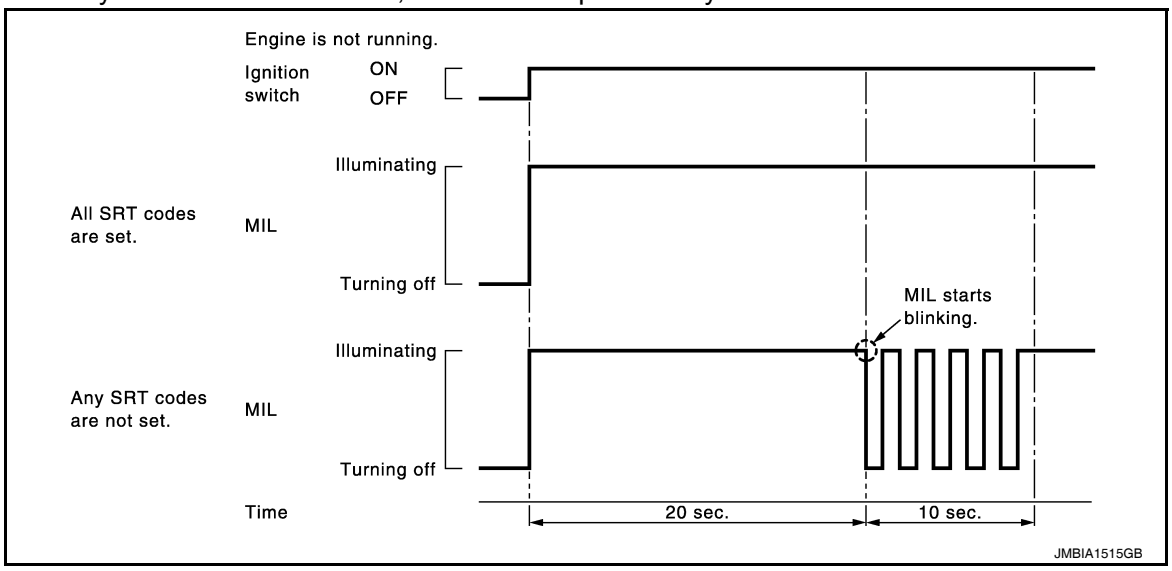

How to Set SRT Code
To set all SRT codes, self-diagnosis for the items indicated above must be performed one or more times. Each diagnosis may require a long period of actual driving under various conditions.

WITH CONSULT-III
Perform corresponding DTC Confirmation Procedure one by one based on Performance Priority in the table on "SRT Item".

WITHOUT CONSULT-III
The most efficient driving pattern in which SRT codes can be properly set is explained below. The driving pattern should be performed one or more times to set all SRT codes.

Driving Pattern

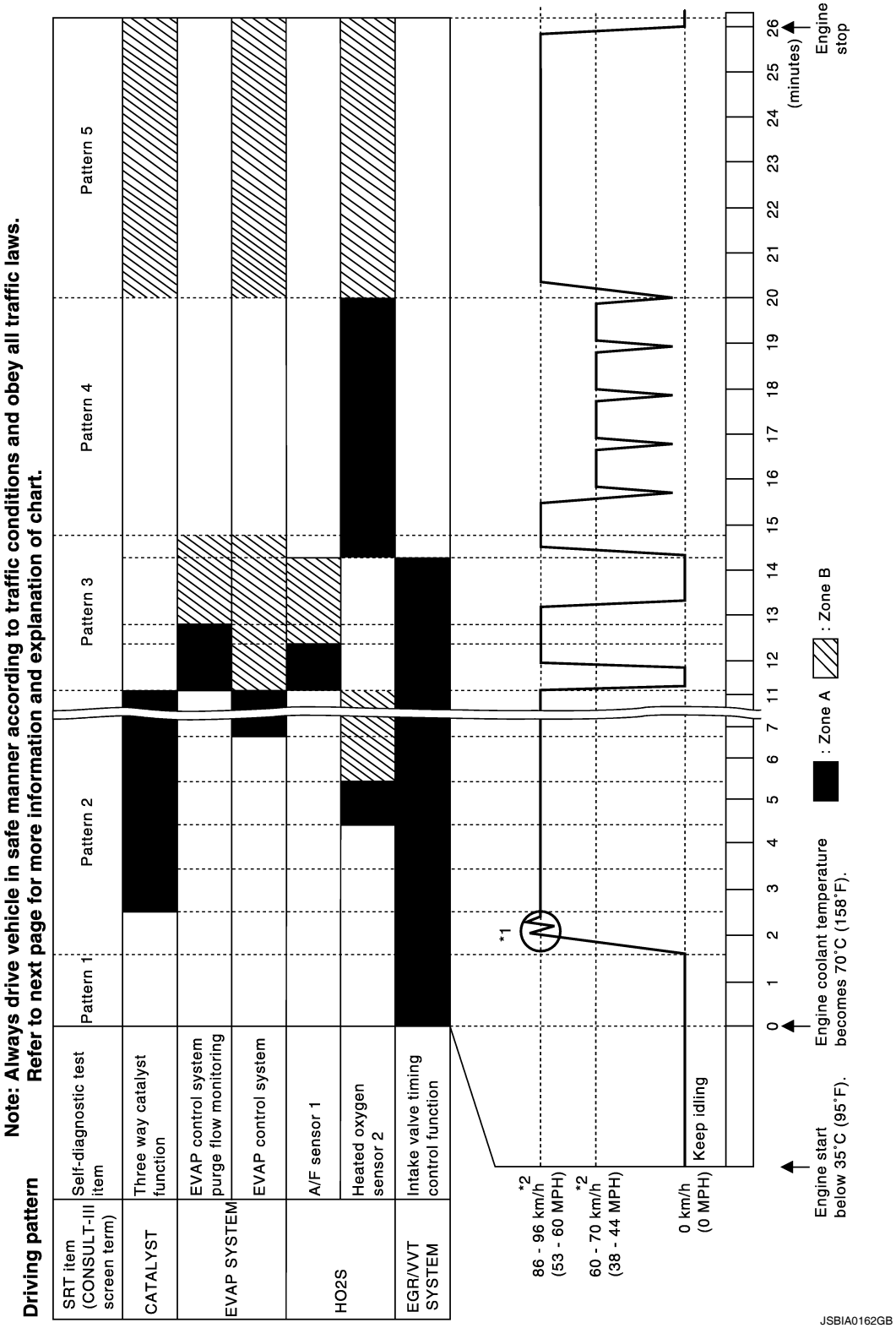

- The time required for each diagnosis varies with road surface conditions, weather, altitude, individual driving habits, etc.
  Zone A refers to the range where the time, required for the diagnosis under normal conditions*, is the shortest.
  Zone B refers to the range where the diagnosis can still be performed if the diagnosis is not completed within zone A.

*: Normal conditions refer to the following:

- Sea level
- Flat road
- Ambient air temperature: 20 - 30°C (68 - 86°F)
- Diagnosis is performed as quickly as possible under normal conditions.
  Under different conditions [For example: ambient air temperature other than 20 - 30°C (68 - 86°F)], diagnosis may also be performed.

Pattern 1:

- **The engine is started at the engine coolant temperature of −10 to 35°C (14 to 95°F) (where the voltage between the ECM terminal 38 and ground is 3.0 - 4.3V).**
- **The engine must be operated at idle speed until the engine coolant temperature is greater than 70°C (158°F) (where the voltage between the ECM terminal 38 and ground is lower than 1.4V).**
- **The engine is started at the fuel tank temperature of warmer than 0°C (32°F) (where the voltage between the ECM terminal 43 and ground is less than 4.1V).**

Pattern 2:

- When steady-state driving is performed again even after it is interrupted, each diagnosis can be conducted. In this case, the time required for diagnosis may be extended.

Pattern 3:

- Operate vehicle following the driving pattern shown in the figure.
- Release the accelerator pedal during decelerating vehicle speed from 90 km/h (56 MPH) to 0 km/h (0 MPH).

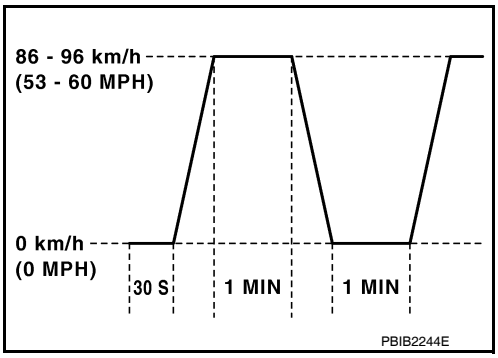

Pattern 4:

- Operate vehicle, following the driving pattern shown in the figure.
- Drive the vehicle in a proper gear at 60 km/h (38 MPH) and maintain the speed.
- Release the accelerator pedal fully at least 5 seconds.
- Repeat the above two steps at least 5 times.

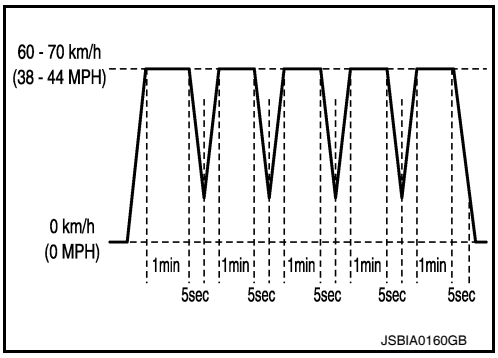

Pattern 5:

- The accelerator pedal must be held very steady during steady-state driving.
- If the accelerator pedal is moved, the test must be conducted all over again.

*1: Depress the accelerator pedal until vehicle speed is 90 km/h (56 MPH), then release the accelerator pedal and keep it released for more than 10 seconds. Depress the accelerator pedal until vehicle speed is 90 km/h (56 MPH) again.
*2: Checking the vehicle speed with GST is advised.

Suggested Transmission Gear Position for CVT Models
Set the selector lever in the D position.
Suggested upshift speeds for M/T models
Shown below are suggested vehicle speeds for shifting into a higher gear. These suggestions relate to fuel economy and vehicle performance. Actual upshift speeds will vary according to road conditions, the weather and individual driving habits.

	For normal acceleration in low altitude areas [less than 1,219 m (4,000 ft)]:	For quick acceleration in low altitude areas	For high attitude areas [over 1,219m (4,000 ft)]:
Gear change	ACCEL shift point km/h (MPH)	km/h (MPH)	km/h (MPH)
1st to 2nd	13 (8)	24 (15)	24 (15)
2nd to 3rd	27 (17)	40 (25)	40 (25)
3rd to 4th	40 (25)	53 (33)	65 (40)
4th to 5th	58 (36)	71 (44)	72 (45)
5th to 6th	82 (51)	82 (51)	82 (51)

Suggested Maximum Speed in Each Gear

Downshift to a lower gear if the engine is not running smoothly, or if you need to accelerate.

Do not exceed the maximum suggested speed (shown below) in any gear. For level road driving, use the highest gear suggested for that speed. Always observe posted speed limits and drive according to the road conditions to ensure safe operation. Do not over-rev the engine when shifting to a lower gear as it may cause engine damage or loss of vehicle control.

Gear	km/h (MPH)
1st	50 (30)
2nd	90 (55)
3rd	—
4th	—
5th	—
6th	—

PERMANENT DIAGNOSTIC TROUBLE CODE (PERMANENT DTC)

Permanent DTC is defined in SAE J1979/ISO 15031-5 Service $0A.

ECM stores a DTC issuing a command of turning on MIL as a permanent DTC and keeps storing the DTC as a permanent DTC until ECM judges that there is no presence of malfunction.

Permanent DTCs cannot be erased by using the Erase function of CONSULT-III or Generic Scan Tool (GST) and by disconnecting the battery to shut off power to ECM. This prevents a vehicle from passing the state emission inspection without repairing a malfunctioning part.

When not passing the state emission inspection due to more than one permanent DTC, permanent DTCs should be erased, referring to this manual.

NOTE:

- The important items in state emission inspection are that MIL is not ON, SRT test items are set, and permanent DTCs are not included.
- Permanent DTCs do not apply for regions that permanent DTCs are not regulated by law.

Permanent DTC Item

For permanent DTC items, MIL turns ON. Refer to EC-617, "Emission-related Diagnostic Information", “EMISSION-RELATED DIAGNOSTIC INFORMATION ITEMS”.

Permanent DTC Set Timing

The setting timing of permanent DTC is stored in ECM with the lighting of MIL when a DTC is confirmed.

Permanent DTC Service Procedure

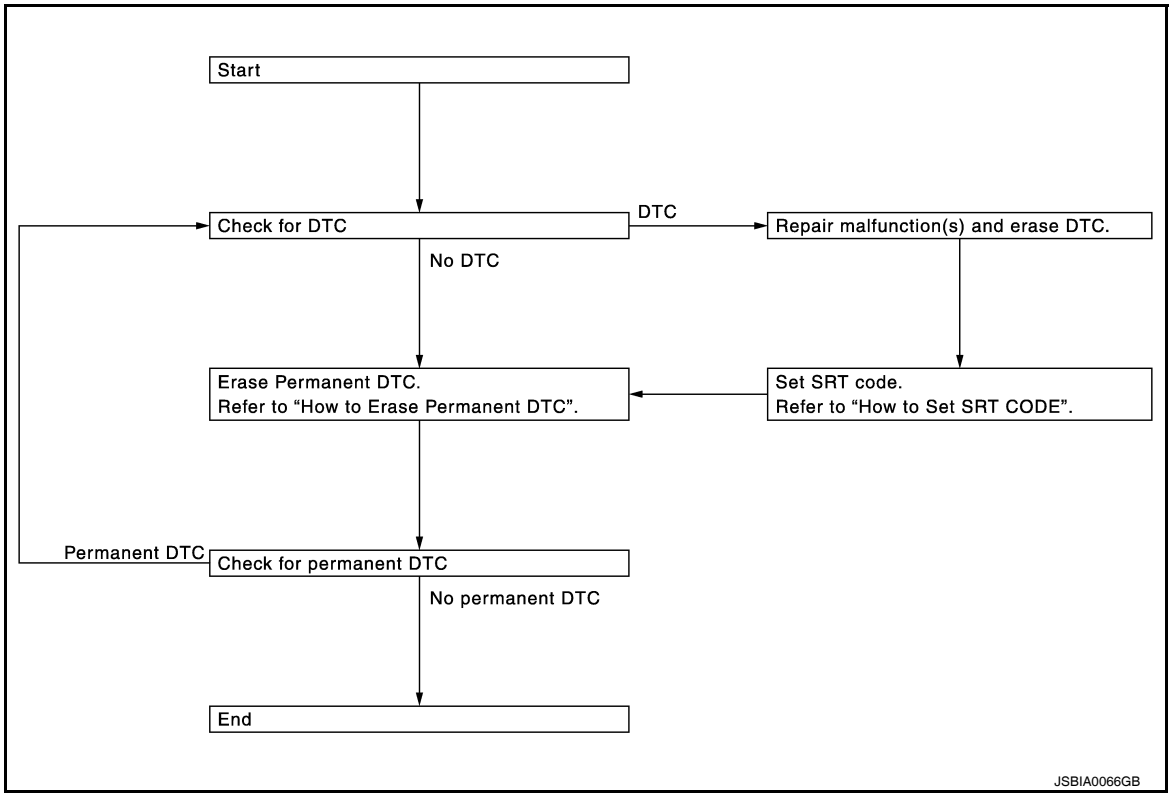

How to Display Permanent DTC Status

WITH CONSULT-III

1. Turn ignition switch OFF and wait at least 10 seconds.
2. Turn ignition switch ON.
3. Turn ignition switch OFF and wait at least 10 seconds.
4. Turn ignition switch ON.
5. Select “PERMANENT DTC STATUS” in “DTC & SRT CONFIRMATION” mode with CONSULT-III.

   NOTE:

   Permanent DTCs stored in ECM memory are displayed on the CONSULT-III screen to show if a driving pattern required for erasing permanent DTCs is complete (CMPLT) or incomplete (INCMP).

   CAUTION:

   Since the “PERMANENT DTC STATUS” screen displays the previous trip information, repeat the following twice to update the information: “Ignition switch OFF”, “Wait for more than 10 seconds” and “Ignition switch ON”.

PERMANENT DTC & SRT CONFIRMATION : PERMANENT DTC STATUS

CAUTION:
Turn ignition switch from ON to OFF twice to update the information on the status screen.

PERMANENT DTC	DRIVING PATTERN B	DRIVING PATTERN D
XXXX	INCMP	INCMP
XXXX	CMPLT	INCMP
XXXX	INCMP	CMPLT
XXXX	CMPLT	INCMP
XXXX	INCMP	INCMP
XXXX	INCMP	INCMP

The previous trip information is displayed.

JSBIA0062GB

WITH GST

1. Turn ignition switch OFF and wait at least 10 seconds.
2. Turn ignition switch ON.
3. Turn ignition switch OFF and wait at least 10 seconds.
4. Turn ignition switch ON.
5. Select Service $0A with GST (Generic Scan Tool).

TEST VALUE AND TEST LIMIT (GST ONLY — NOT APPLICABLE TO CONSULT-III)

The following is the information specified in Service $06 of SAE J1979/ISO 15031-5.

The test value is a parameter used to determine whether a system/circuit diagnostic test is OK or NG while being monitored by the ECM during self-diagnosis. The test limit is a reference value which is specified as the maximum or minimum value and is compared with the test value being monitored.

These data (test value and test limit) are specified by On Board Monitor ID (OBDMID), Test ID (TID), Unit and Scaling ID and can be displayed on the GST screen.

The items of the test value and test limit will be displayed with GST screen which items are provided by the ECM. (eg., if bank 2 is not applied on this vehicle, only the items of bank 1 are displayed)

Item	OBD-MID	Self-diagnostic test item	DTC	Test value and Test limit (GST display)		Description
				TID	Unit and Scaling ID	
HO2S	01H	Air fuel ratio (A/F) sensor 1 (Bank 1)	P0131	83H	0BH	Minimum sensor output voltage for test cycle
			P0131	84H	0BH	Maximum sensor output voltage for test cycle
			P0130	85H	0BH	Minimum sensor output voltage for test cycle
			P0130	86H	0BH	Maximum sensor output voltage for test cycle
			P0133	87H	04H	Response rate: Response ratio (Lean to Rich)
			P0133	88H	04H	Response rate: Response ratio (Rich to Lean)
			P2A00	89H	84H	The amount of shift in air fuel ratio
			P2A00	8AH	84H	The amount of shift in air fuel ratio
			P0130	8BH	0BH	Difference in sensor output voltage
			P0133	8CH	83H	Response gain at the limited frequency
			P014C	8DH	04H	O2 Sensor Slow Response - Rich to Lean Bank 1 Sensor 1
			P014C	8EH	04H	O2 Sensor Slow Response - Rich to Lean Bank 1 Sensor 1
			P014D	8FH	84H	O2 Sensor Slow Response - Lean to Rich Bank 1 Sensor 1
			P014D	90H	84H	O2 Sensor Slow Response - Lean to Rich Bank 1 Sensor 1
			P015A	91H	01H	O2 Sensor Delayed Response - Rich to Lean Bank 1 Sensor 1
			P015A	92H	01H	O2 Sensor Delayed Response - Rich to Lean Bank 1 Sensor 1
			P015B	93H	01H	O2 Sensor Delayed Response - Lean to Rich Bank 1 Sensor 1
			P015B	94H	01H	O2 Sensor Delayed Response - Lean to Rich Bank 1 Sensor 1
	02H	Heated oxygen sensor 2 (Bank 1)	P0138	07H	0CH	Minimum sensor output voltage for test cycle
			P0137	08H	0CH	Maximum sensor output voltage for test cycle
			P0138	80H	0CH	Sensor output voltage
			P0139	81H	0CH	Difference in sensor output voltage
	03H	Heated oxygen sensor 3 (Bank 1)	P0143	07H	0CH	Minimum sensor output voltage for test cycle
			P0144	08H	0CH	Maximum sensor output voltage for test cycle
			P0146	80H	0CH	Sensor output voltage
			P0145	81H	0CH	Difference in sensor output voltage

Item	OBD-MID	Self-diagnostic test item	DTC	Test value and Test limit (GST display)		Description
				TID	Unit and Scaling ID	
HO2S	05H	Air fuel ratio (A/F) sensor 1 (Bank 2)	P0151	83H	0BH	Minimum sensor output voltage for test cycle
			P0151	84H	0BH	Maximum sensor output voltage for test cycle
			P0150	85H	0BH	Minimum sensor output voltage for test cycle
			P0150	86H	0BH	Maximum sensor output voltage for test cycle
			P0153	87H	04H	Response rate: Response ratio (Lean to Rich)
			P0153	88H	04H	Response rate: Response ratio (Rich to Lean)
			P2A03	89H	84H	The amount of shift in air fuel ratio
			P2A03	8AH	84H	The amount of shift in air fuel ratio
			P0150	8BH	0BH	Difference in sensor output voltage
			P0153	8CH	83H	Response gain at the limited frequency
			P014E	8DH	04H	O2 Sensor Slow Response - Rich to Lean Bank 2 Sensor 1
			P014E	8EH	04H	O2 Sensor Slow Response - Rich to Lean Bank 2 Sensor 1
			P014F	8FH	84H	O2 Sensor Slow Response - Lean to Rich Bank 2 Sensor 1
			P014F	90H	84H	O2 Sensor Slow Response - Lean to Rich Bank 2 Sensor 1
			P015C	91H	01H	O2 Sensor Delayed Response - Rich to Lean Bank 2 Sensor 1
			P015C	92H	01H	O2 Sensor Delayed Response - Rich to Lean Bank 2 Sensor 1
			P015D	93H	01H	O2 Sensor Delayed Response - Lean to Rich Bank 2 Sensor 1
			P015D	94H	01H	O2 Sensor Delayed Response - Lean to Rich Bank 2 Sensor 1
	06H	Heated oxygen sensor 2 (Bank 2)	P0158	07H	0CH	Minimum sensor output voltage for test cycle
			P0157	08H	0CH	Maximum sensor output voltage for test cycle
			P0158	80H	0CH	Sensor output voltage
			P0159	81H	0CH	Difference in sensor output voltage
	07H	Heated oxygen sensor 3 (Bank2)	P0163	07H	0CH	Minimum sensor output voltage for test cycle
			P0164	08H	0CH	Maximum sensor output voltage for test cycle
			P0166	80H	0CH	Sensor output voltage
			P0165	81H	0CH	Difference in sensor output voltage

Item	OBD-MID	Self-diagnostic test item	DTC	Test value and Test limit (GST display)		Description
				TID	Unit and Scaling ID	
CATA-LYST	21H	Three way catalyst function (Bank1)	P0420	80H	01H	O2 storage index
			P0420	82H	01H	Switching time lag engine exhaust index value
			P2423	83H	0CH	Difference in 3rd O2 sensor output voltage
			P2423	84H	84H	O2 storage index in HC trap catalyst
	22H	Three way catalyst function (Bank2)	P0430	80H	01H	O2 storage index
			P0430	82H	01H	Switching time lag engine exhaust index value
			P2424	83H	0CH	Difference in 3rd O2 sensor output voltage
			P2424	84H	84H	O2 storage index in HC trap catalyst
EGR SYSTEM	31H	EGR function	P0400	80H	96H	Low Flow Faults: EGR temp change rate (short term)
			P0400	81H	96H	Low Flow Faults: EGR temp change rate (long term)
			P0400	82H	96H	Low Flow Faults: Difference between max EGR temp and EGR temp under idling condition
			P0400	83H	96H	Low Flow Faults: Max EGR temp
			P1402	84H	96H	High Flow Faults: EGR temp increase rate
VVT SYSTEM	35H	VVT Monitor (Bank1)	P0011	80H	9DH	VTC intake function diagnosis (VTC alignment check diagnosis)
			P0014	81H	9DH	VTC exhaust function diagnosis (VTC alignment check diagnosis)
			P0011	82H	9DH	VTC intake function diagnosis (VTC drive failure diagnosis)
			P0014	83H	9DH	VTC exhaust function diagnosis (VTC drive failure diagnosis)
	36H	VVT Monitor (Bank2)	P0021	80H	9DH	VTC intake function diagnosis (VTC alignment check diagnosis)
			P0024	81H	9DH	VTC exhaust function diagnosis (VTC alignment check diagnosis)
			P0021	82H	9DH	VTC intake function diagnosis (VTC drive failure diagnosis)
			P0024	83H	9DH	VTC exhaust function diagnosis (VTC drive failure diagnosis)

Item	OBD-MID	Self-diagnostic test item	DTC	Test value and Test limit (GST display)		Description
				TID	Unit and Scaling ID	
EVAP SYSTEM	39H	EVAP control system leak (Cap Off)	P0455	80H	0CH	Difference in pressure sensor output voltage before and after pull down
	3BH	EVAP control system leak (Small leak)	P0442	80H	05H	Leak area index (for more than 0.04 inch)
	3CH	EVAP control system leak (Very small leak)	P0456	80H	05H	Leak area index (for more than 0.02 inch)
			P0456	81H	FDH	Maximum internal pressure of EVAP system during monitoring
			P0456	82H	FDH	Internal pressure of EVAP system at the end of monitoring
	3DH	Purge flow system	P0441	83H	0CH	Difference in pressure sensor output voltage before and after vent control valve close
O2 SENSOR HEATER	41H	A/F sensor 1 heater (Bank 1)	Low Input:P0031 High Input:P0032	81H	0BH	Converted value of Heater electric current to voltage
	42H	Heated oxygen sensor 2 heater (Bank 1)	Low Input:P0037 High Input:P0038	80H	0CH	Converted value of Heater electric current to voltage
	43H	Heated oxygen sensor 3 heater (Bank 1)	P0043	80H	0CH	Converted value of Heater electric current to voltage
	45H	A/F sensor 1 heater (Bank 2)	Low Input:P0051 High Input:P0052	81H	0BH	Converted value of Heater electric current to voltage
	46H	Heated oxygen sensor 2 heater (Bank 2)	Low Input:P0057 High Input:P0058	80H	0CH	Converted value of Heater electric current to voltage
	47H	Heated oxygen sensor 3 heater (Bank 2)	P0063	80H	0CH	Converted value of Heater electric current to voltage
Secondary Air	71H	Secondary Air system	P0411	80H	01H	Secondary Air Injection System Incorrect Flow Detected
			Bank1: P0491 Bank2: P0492	81H	01H	Secondary Air Injection System Insufficient Flow
			P2445	82H	01H	Secondary Air Injection System Pump Stuck Off
			P2448	83H	01H	Secondary Air Injection System High Airflow
			Bank1: P2440 Bank2: P2442	84H	01H	Secondary Air Injection System Switching Valve Stuck Open
			P2440	85H	01H	Secondary Air Injection System Switching Valve Stuck Open
			P2444	86H	01H	Secondary Air Injection System Pump Stuck On
FUEL SYSTEM	81H	Fuel injection system function (Bank 1)	P0171 or P0172	80H	2FH	Long term fuel trim
			P0171 or P0172	81H	24H	The number of lambda control clamped
	82H	Fuel injection system function (Bank 2)	P0174 or P0175	80H	2FH	Long term fuel trim
			P0174 or P0175	81H	24H	The number of lambda control clamped

Item	OBD-MID	Self-diagnostic test item	DTC	Test value and Test limit (GST display)		Description
				TID	Unit and Scaling ID	
MISFIRE	A1H	Multiple Cylinder Misfires	P0301	80H	24H	Misfiring counter at 1000 revolution of the first cylinder
			P0302	81H	24H	Misfiring counter at 1000 revolution of the second cylinder
			P0303	82H	24H	Misfiring counter at 1000 revolution of the third cylinder
			P0304	83H	24H	Misfiring counter at 1000 revolution of the fourth cylinder
			P0305	84H	24H	Misfiring counter at 1000 revolution of the fifth cylinder
			P0306	85H	24H	Misfiring counter at 1000 revolution of the sixth cylinder
			P0307	86H	24H	Misfiring counter at 1000 revolution of the seventh cylinder
			P0308	87H	24H	Misfiring counter at 1000 revolution of the eighth cylinder
			P0300	88H	24H	Misfiring counter at 1000 revolution of the multiple cylinders
			P0301	89H	24H	Misfiring counter at 200 revolution of the first cylinder
			P0302	8AH	24H	Misfiring counter at 200 revolution of the second cylinder
			P0303	8BH	24H	Misfiring counter at 200 revolution of the third cylinder
			P0304	8CH	24H	Misfiring counter at 200 revolution of the fourth cylinder
			P0305	8DH	24H	Misfiring counter at 200 revolution of the fifth cylinder
			P0306	8EH	24H	Misfiring counter at 200 revolution of the sixth cylinder
			P0307	8FH	24H	Misfiring counter at 200 revolution of the seventh cylinder
			P0308	90H	24H	Misfiring counter at 200 revolution of the eighth cylinder
			P0300	91H	24H	Misfiring counter at 1000 revolution of the single cylinder
			P0300	92H	24H	Misfiring counter at 200 revolution of the single cylinder
			P0300	93H	24H	Misfiring counter at 200 revolution of the multiple cylinders

Item	OBD-MID	Self-diagnostic test item	DTC	Test value and Test limit (GST display)		Description
				TID	Unit and Scaling ID	
MISFIRE	A2H	No. 1 Cylinder Misfire	P0301	0BH	24H	EWMA (Exponential Weighted Moving Average) misfire counts for last 10 driving cycles
			P0301	0CH	24H	Misfire counts for last/current driving cycles
	A3H	No. 2 Cylinder Misfire	P0302	0BH	24H	EWMA (Exponential Weighted Moving Average) misfire counts for last 10 driving cycles
			P0302	0CH	24H	Misfire counts for last/current driving cycles
	A4H	No. 3 Cylinder Misfire	P0303	0BH	24H	EWMA (Exponential Weighted Moving Average) misfire counts for last 10 driving cycles
			P0303	0CH	24H	Misfire counts for last/current driving cycles
	A5H	No. 4 Cylinder Misfire	P0304	0BH	24H	EWMA (Exponential Weighted Moving Average) misfire counts for last 10 driving cycles
			P0304	0CH	24H	Misfire counts for last/current driving cycles
	A6H	No. 5 Cylinder Misfire	P0305	0BH	24H	EWMA (Exponential Weighted Moving Average) misfire counts for last 10 driving cycles
			P0305	0CH	24H	Misfire counts for last/current driving cycles
	A7H	No. 6 Cylinder Misfire	P0306	0BH	24H	EWMA (Exponential Weighted Moving Average) misfire counts for last 10 driving cycles
			P0306	0CH	24H	Misfire counts for last/current driving cycles
	A8H	No. 7 Cylinder Misfire	P0307	0BH	24H	EWMA (Exponential Weighted Moving Average) misfire counts for last 10 driving cycles
			P0307	0CH	24H	Misfire counts for last/current driving cycles
	A9H	No. 8 Cylinder Misfire	P0308	0BH	24H	EWMA (Exponential Weighted Moving Average) misfire counts for last 10 driving cycles
			P0308	0CH	24H	Misfire counts for last/current driving cycles

HOW TO ERASE EMISSION-RELATED DIAGNOSTIC INFORMATION

How to Erase DTC

With CONSULT-III

NOTE:

- If the ignition switch stays ON after repair work, be sure to turn ignition switch OFF once. Wait at least 10 seconds and then turn it ON (engine stopped) again.
- If the DTC is not for CVT related items, skip step 1.

1. Erase DTC in TCM.
2. Select "ENGINE" with CONSULT-III.
3. Select "SELF-DIAG RESULTS".

4. Touch "ERASE". (The DTC in the ECM will be erased.)

With GST

NOTE:

If the ignition switch stays ON after repair work, be sure to turn ignition switch OFF once. Wait at least 10 seconds and then turn it ON (engine stopped) again.

1. Select Service $04 with GST.

No Tools

NOTE:

If the ignition switch stays ON after repair work, be sure to turn ignition switch OFF once. Wait at least 10 seconds and then turn it ON (engine stopped) again.

1. Erase DTC in ECM. Refer to How to Erase Diagnostic Test Mode II (Self-diagnostic Results).

- **If the battery is disconnected, the emission-related diagnostic information will be lost within 24 hours.**
- **The following data are cleared when the ECM memory is erased.**

- Diagnostic trouble codes
- 1st trip diagnostic trouble codes
- Freeze frame data
- 1st trip freeze frame data
- System readiness test (SRT) codes
- Test values

How to Erase Permanent DTC

When a DTC is stored in ECM

- When a DTC is stored in ECM and MIL is ON, a permanent DTC is erased with MIL shutoff if the same malfunction is not detected after performing the driving pattern for MIL shutoff three times in a raw.

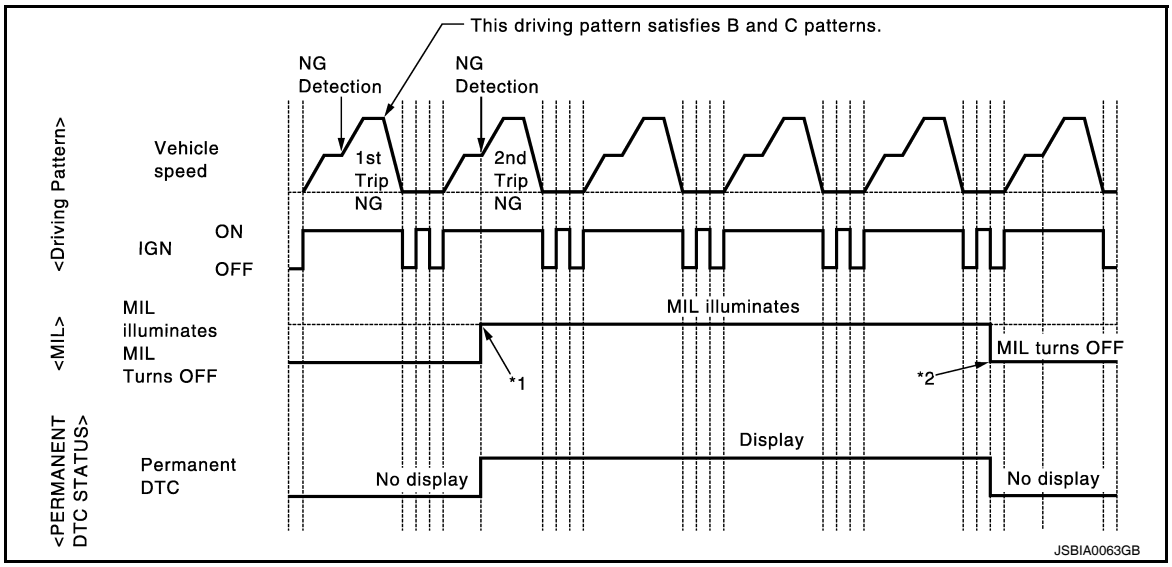

*1: When the same malfunction is detected in two consecutive trips, MIL will illuminate.

*2: MIL will turn off after vehicle is driven 3 times (pattern B) without any malfunctions.

When a DTC is not stored in ECM

- The erasing method depends on a permanent DTC stored in ECM. Refer to the following table.

×: Applicable —: Not applicable

Group*	Perform “DTC CONFIRMATION PROCEDURE” for applicable DTCs.	Driving pattern	
		B	D
A	×	—	—
B	—	×	×

*: For group, refer to EC-617, "Emission-related Diagnostic Information", “EMISSION-RELATED DIAGNOSTIC INFORMATION ITEMS”.

Group A

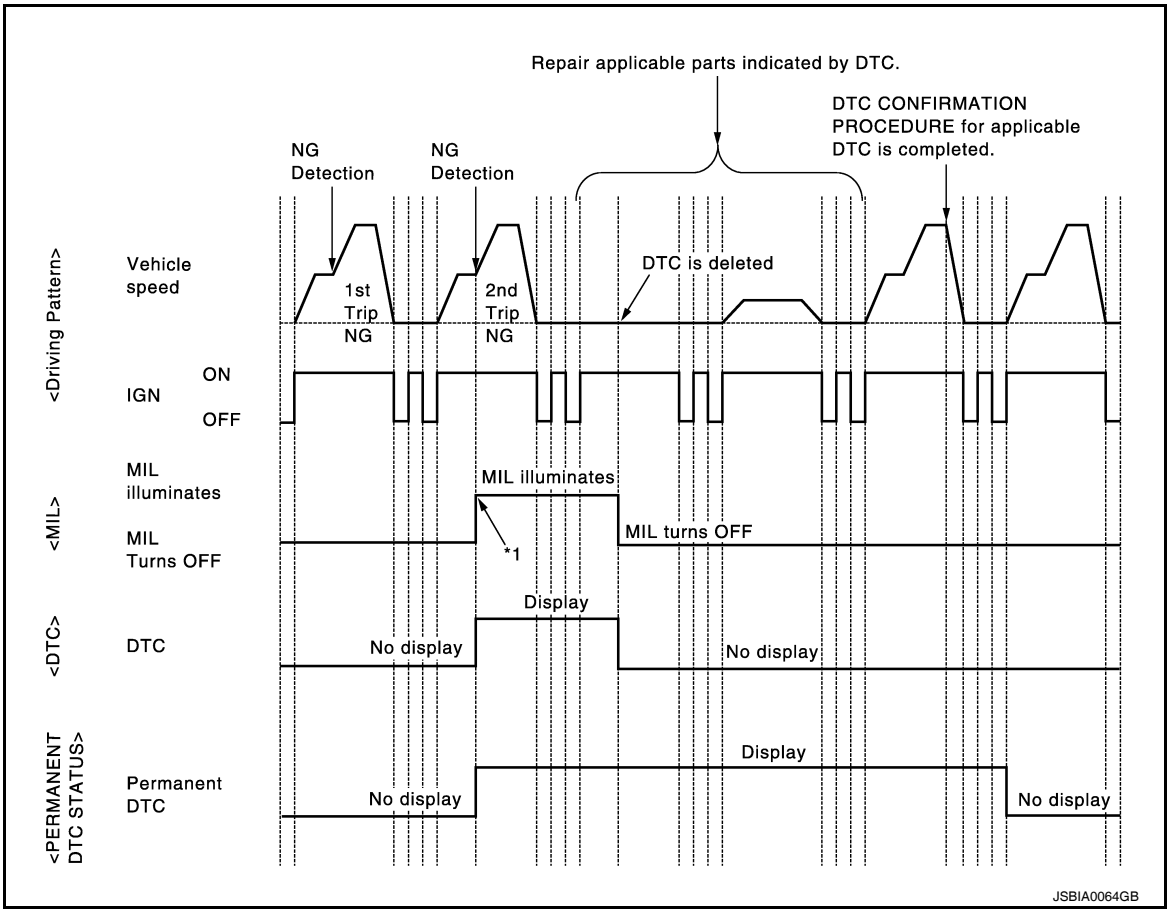

*1: When the same malfunction is detected in two consecutive trips, MIL will illuminate.

1. Turn ignition switch OFF and wait at least 10 seconds.
2. Turn ignition switch ON.
3. Turn ignition switch OFF and wait at least 10 seconds.
4. Turn ignition switch ON.
5. Check permanent DTC. Refer to EC-617, "Emission-related Diagnostic Information", “How to Display Permanent DTC Status”.
6. Perform “DTC CONFIRMATION PROCEDURE” for DTCs which are the same as permanent DTCs stored in ECM.
7. Turn ignition switch OFF and wait at least 10 seconds.
8. Turn ignition switch ON.
9. Turn ignition switch OFF and wait at least 10 seconds.
10. Turn ignition switch ON.
11. Check permanent DTC. Refer to EC-617, "Emission-related Diagnostic Information", “How to Display Permanent DTC Status”.
12. Check that the permanent DTCs have been erased.

Group B

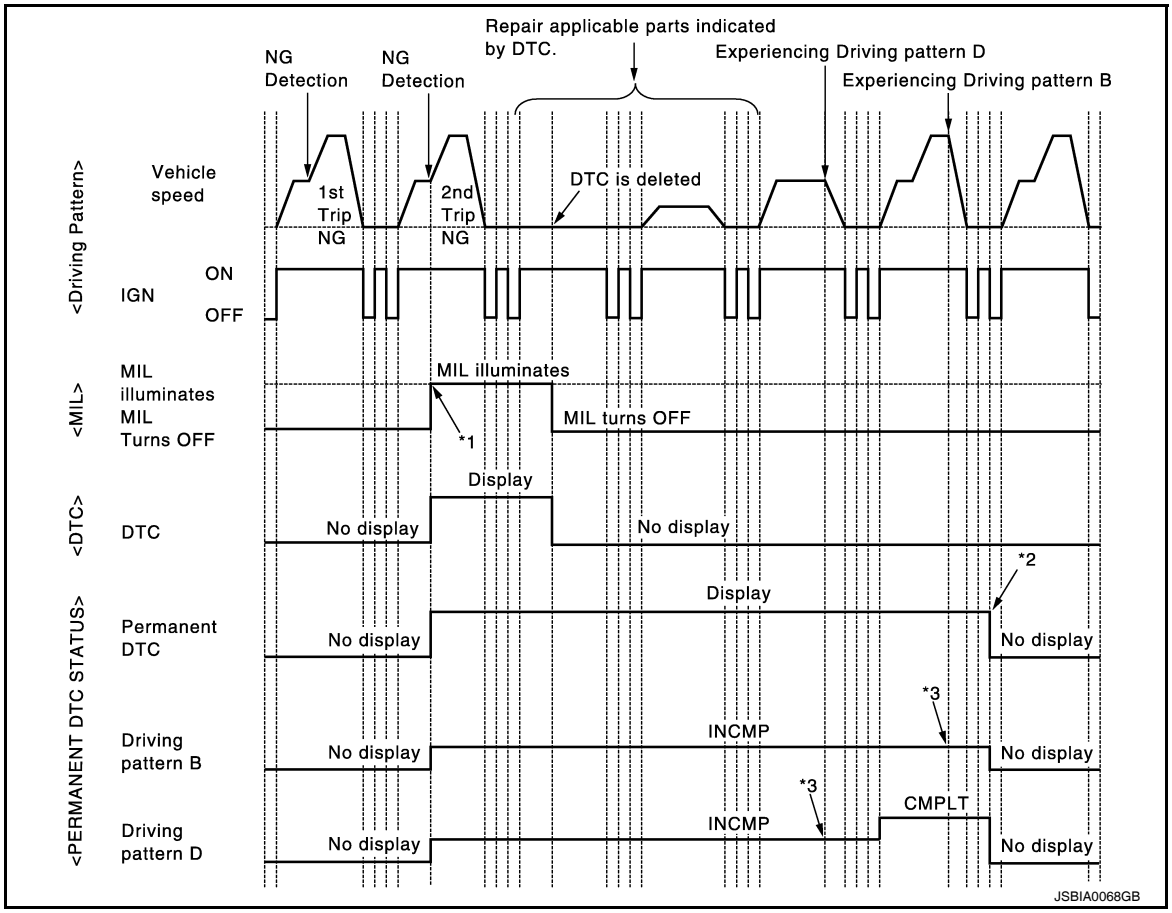

*1: When the same malfunction is detected in two consecutive trips, MIL will illuminate.

*2: After experiencing Driving pattern B and D, permanent DTC is erased.

*3: Indication does not change unless the ignition switch is turned from ON to OFF twice even after experiencing Driving pattern B or D.

NOTE:

- Drive the vehicle according to only driving patterns indicating “INCMP” in driving patterns B and D on the “PERMANENT DTC STATUS” screen.
- When experiencing both driving pattern B and D during the same trip, the experience of driving pattern D is counted by priority.

1. Turn ignition switch OFF and wait at least 10 seconds.
2. Turn ignition switch ON.
3. Turn ignition switch OFF and wait at least 10 seconds.
4. Turn ignition switch ON.
5. Check permanent DTC. Refer to EC-62, "Emission-related Diagnostic Information", “How to Display Permanent DTC Status”.
6. Start engine and warm it up to normal operating temperature.
7. Drive the vehicle according to driving pattern D.

   CAUTION:
   - **Always drive at a safe speed.**
   - **Never erase self-diagnosis results.**
   - **If self-diagnosis results are erased during the trip of driving pattern B or D, the counter of driving pattern B or D is reset.**
   - **If self-diagnosis results are erased during the trip of driving pattern B or D, an experience of driving pattern B and D during the same trip is not counted up.**
8. Turn ignition switch OFF and wait at least 10 seconds.
9. Turn ignition switch ON.
10. Turn ignition switch OFF and wait at least 10 seconds.
11. Turn ignition switch ON.
12. Use “PERMANENT DTC WORK SUPPORT” to drive the vehicle according to driving pattern B.

CAUTION:
- **Always drive at a safe speed.**
- **Never erase self-diagnosis results.**
- **If self-diagnosis results are erased during the trip of driving pattern B or D, the counter of driving pattern B or D is reset.**
- **If self-diagnosis results are erased during the trip of driving pattern B or D, an experience of driving pattern B and D during the same trip is not counted up.**

13. Turn ignition switch OFF and wait at least 10 seconds.
14. Turn ignition switch ON.
15. Turn ignition switch OFF and wait at least 10 seconds.
16. Turn ignition switch ON.
17. Check permanent DTC. Refer to EC-617, "Emission-related Diagnostic Information", “How to Display Permanent DTC Status”.
18. Check that the permanent DTCs have been erased.

DRIVING PATTERN

Driving Pattern B
- Driving pattern B means a trip satisfying the following conditions.
- Engine speed reaches 400 rpm or more.
- Water temperature reaches 70°C (158°F) ore more.
- Vehicle speed of 70 – 120 km/h (44 – 75 MPH) is maintained for 60 seconds or more under the control of closed loop.
- Vehicle speed of 30 – 60 km/h (19 – 37 MPH) is maintained for 10 seconds or more under the control of closed loop.
- Under the closed loop control condition, the following state reaches 12 seconds or more in total: Vehicle speed of 4 km/h (2 MPH) or less with idling condition.
- The state of driving at 10 km/h (7 MPH) or more reaches 10 minutes or more in total.
- A lapse of 22 minutes or more after engine start.

CAUTION:
Always drive at a safe speed.
NOTE:
- Drive the vehicle at a constant velocity.
- When the same malfunction is detected regardless of driving conditions, reset the counter of driving pattern B.
- When the above conditions are satisfied without detecting the same malfunction, reset the counter of driving pattern B.

Driving Pattern D
- Driving pattern D means operating vehicle as per the following.
- The state of driving at 40 km/h (25 MPH) reaches 300 seconds or more in total.
- Idle speed lasts 30 seconds or more.
- A lapse of 600 seconds or more after engine start.

CAUTION:
Always drive at a safe speed.
NOTE:
- When the same malfunction is detected regardless of driving conditions, reset the counter of driving pattern D.
- When the above conditions are satisfied without detecting the same malfunction, reset the counter of driving pattern D.

Malfunction Indicator Lamp (MIL)

INFOID:0000000005285163

DESCRIPTION

The MIL is located on the instrument panel.

1. The MIL will light up when the ignition switch is turned ON without the engine running. This is a bulb check.
   If the MIL does not light up, refer to DI-35 or see EC-1113.
2. When the engine is started, the MIL should go off.
   If the MIL remains on, the on board diagnostic system has detected an engine system malfunction.

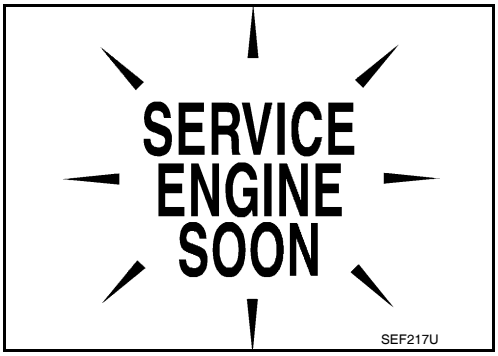

ON BOARD DIAGNOSTIC SYSTEM FUNCTION

The on board diagnostic system has the following three functions.

Diagnostic Test Mode	KEY and ENG. Status	Function	Explanation of Function
Mode I	Ignition switch in ON position Engine stopped	BULB CHECK	This function checks the MIL bulb for damage (blown, open circuit, etc.). If the MIL does not come on, check MIL circuit.
	Engine running	MALFUNCTION WARNING	This is a usual driving condition. When a malfunction is detected twice in two consecutive driving cycles (two trip detection logic), the MIL will light up to inform the driver that a malfunction has been detected. The following malfunctions will light up or blink the MIL in the 1st trip. • Misfire (Possible three way catalyst damage) • One trip detection diagnoses
Mode II	Ignition switch in ON position Engine stopped	SELF-DIAGNOSTIC RESULTS	This function allows DTCs and 1st trip DTCs to be read.

When there is an open circuit on MIL circuit, the ECM cannot warn the driver by MIL lighting up when there is malfunction on engine control system.
Therefore, when electrical controlled throttle and part of ECM related diagnoses are continuously detected as NG for 5 trips, ECM warns the driver that engine control system malfunctions and MIL circuit is open by means of operating fail-safe function.
The fail-safe function also operates when above diagnoses except MIL circuit are detected, and demands the driver to repair the malfunction.

Engine operating condition in fail-safe mode	Engine speed will not rise more than 2,500 rpm due to the fuel cut

MIL Flashing Without DTC

When any SRT codes are not set, MIL may flash without DTC. For the details, refer to EC-617, "Emission-related Diagnostic Information".

HOW TO SWITCH DIAGNOSTIC TEST MODE

NOTE:

- **It is better to count the time accurately with a clock.**

- **It is impossible to switch the diagnostic mode when an accelerator pedal position sensor circuit has a malfunction.**
- **Always ECM returns to Diagnostic Test Mode I after ignition switch is turned OFF.**

How to Set Diagnostic Test Mode II (Self-diagnostic Results)

1. Confirm that accelerator pedal is fully released, turn ignition switch ON and wait 3 seconds.
2. Repeat the following procedure quickly five times within 5 seconds.

a. Fully depress the accelerator pedal.
b. Fully release the accelerator pedal.

3. Wait 7 seconds, fully depress the accelerator pedal and keep it for approx. 10 seconds until the MIL starts blinking.
4. Fully release the accelerator pedal.
   ECM has entered to Diagnostic Test Mode II (Self-diagnostic results).

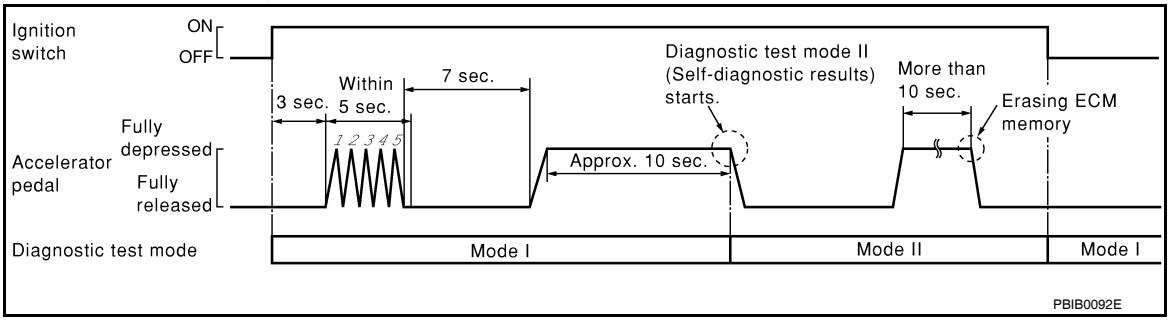

How to Erase Diagnostic Test Mode II (Self-diagnostic Results)

1. Set ECM in Diagnostic Test Mode II (Self-diagnostic results).
   Refer to "How to Set Diagnostic Test Mode II (Self-diagnostic Results)".
2. Fully depress the accelerator pedal and keep it for more than 10 seconds.
   The emission-related diagnostic information has been erased from the backup memory in the ECM.
3. Fully release the accelerator pedal, and confirm the DTC 0000 is displayed.

DIAGNOSTIC TEST MODE I — BULB CHECK

In this mode, the MIL on the instrument panel should stay ON. If it remains OFF, check the bulb.
Refer to DI-35 or EC-1113.

DIAGNOSTIC TEST MODE I — MALFUNCTION WARNING

MIL	Condition
ON	When the malfunction is detected.
OFF	No malfunction

These DTC numbers are clarified in Diagnostic Test Mode II (SELF-DIAGNOSTIC RESULTS)

DIAGNOSTIC TEST MODE II — SELF-DIAGNOSTIC RESULTS

In this mode, the DTC and 1st trip DTC are indicated by the number of blinks of the MIL as shown below.
The DTC and 1st trip DTC are displayed at the same time. If the MIL does not illuminate in diagnostic test mode I (Malfunction warning), all displayed items are 1st trip DTCs. If only one code is displayed when the MIL illuminates in diagnostic test mode II (SELF-DIAGNOSTIC RESULTS), it is a DTC; if two or more codes are displayed, they may be either DTCs or 1st trip DTCs. DTC No. is same as that of 1st trip DTC. These uniden-

tified codes can be identified by using the CONSULT-III or GST. A DTC will be used as an example for how to read a code.

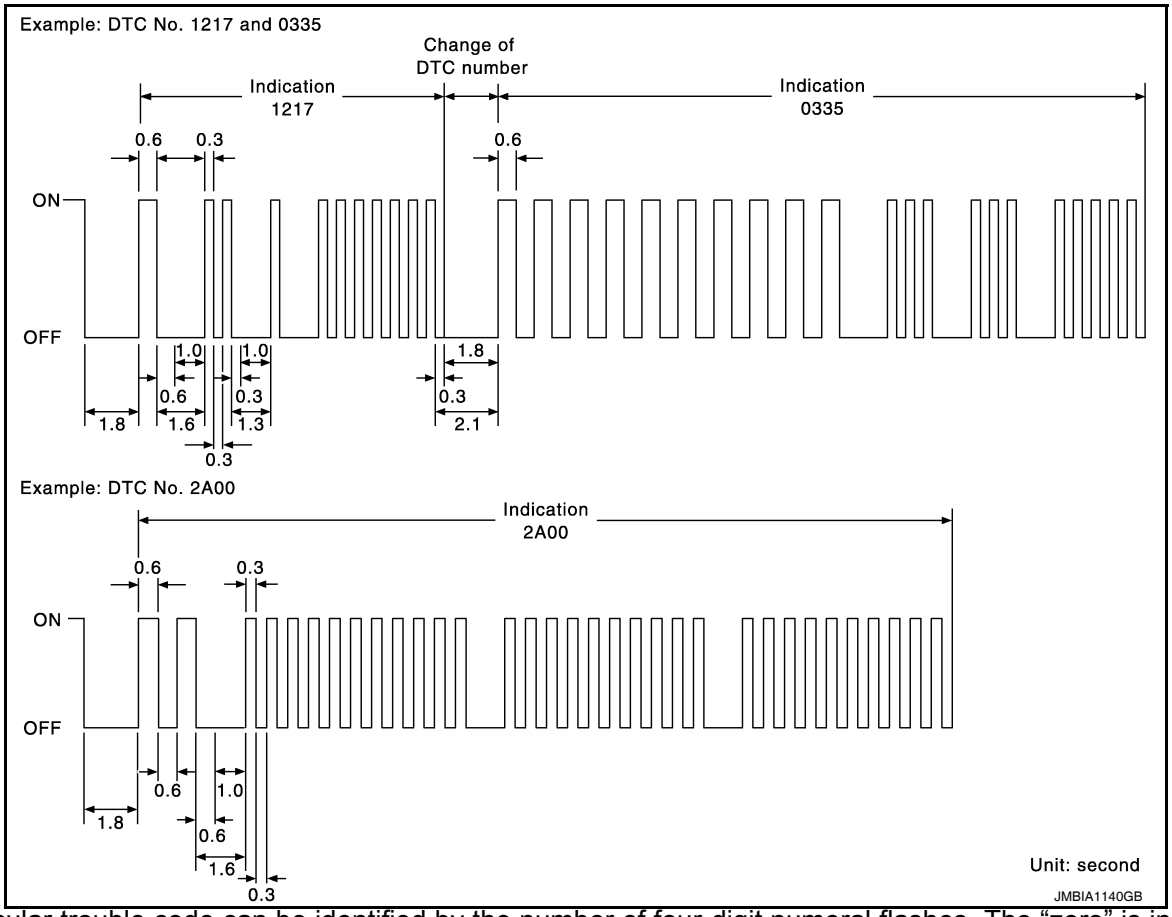

A particular trouble code can be identified by the number of four-digit numeral flashes. The “zero” is indicated by the number of ten flashes. The “A” is indicated by the number of eleven flash. The length of time the 1,000th-digit numeral flashes on and off is 1.2 seconds consisting of an ON (0.6-second) - OFF (0.6-second) cycle. The 100th-digit numeral and lower digit numerals consist of a 0.3-second ON and 0.3-second OFF cycle. A change from one digit numeral to another occurs at an interval of 1.0-second OFF. In other words, the later numeral appears on the display 1.3 seconds after the former numeral has disappeared.
A change from one trouble code to another occurs at an interval of 1.8-second OFF.
In this way, all the detected malfunctions are classified by their DTC numbers. The DTC 0000 refers to no malfunction. (See EC-579)

How to Erase Diagnostic Test Mode II (Self-diagnostic Results)
The DTC can be erased from the back-up memory in the ECM by depressing accelerator pedal.
Refer to "How to Erase Diagnostic Test Mode II (Self-diagnostic Results)".
- **If the battery is disconnected, the DTC will be lost from the backup memory within 24 hours.**
- **Be careful not to erase the stored memory before starting trouble diagnoses.**

OBD System Operation Chart

INFOID:0000000005568637

RELATIONSHIP BETWEEN MIL, 1ST TRIP DTC, DTC, AND DETECTABLE ITEMS

- When a malfunction is detected for the first time, the 1st trip DTC and the 1st trip freeze frame data are stored in the ECM memory.
- When the same malfunction is detected in two consecutive trips, the DTC and the freeze frame data are stored in the ECM memory, and the MIL will come on. For details, refer to EC-61, "Two Trip Detection Logic".
- The MIL will go off after the vehicle is driven 3 times (driving pattern B) with no malfunction. The drive is counted only when the recorded driving pattern is met (as stored in the ECM). If another malfunction occurs while counting, the counter will reset.
- The DTC and the freeze frame data will be stored until the vehicle is driven 40 times (driving pattern A) without the same malfunction recurring (except for Misfire and Fuel Injection System). For Misfire and Fuel Injection System, the DTC and freeze frame data will be stored until the vehicle is driven 80 times (driving pattern

C) without the same malfunction recurring. The “TIME” in “SELF-DIAGNOSTIC RESULTS” mode of CONSULT-III will count the number of times the vehicle is driven.

- The 1st trip DTC is not displayed when the self-diagnosis results in OK for the 2nd trip.

SUMMARY CHART

Items	Fuel Injection System	Misfire	Other
MIL (goes off)	3 (pattern B)	3 (pattern B)	3 (pattern B)
DTC, Freeze Frame Data (no display)	80 (pattern C)	80 (pattern C)	40 (pattern A)
1st Trip DTC (clear)	1 (pattern C), *1	1 (pattern C), *1	1 (pattern B)
1st Trip Freeze Frame Data (clear)	*1, *2	*1, *2	1 (pattern B)

For details about patterns B and C under “Fuel Injection System” and “Misfire”, see "EXPLANATION FOR DRIVING PATTERNS FOR “MISFIRE <EXHAUST QUALITY DETERIORATION>”, “FUEL INJECTION SYSTEM”".

For details about patterns A and B under “Other”, see "EXPLANATION FOR DRIVING PATTERNS FOR “MISFIRE <EXHAUST QUALITY DETERIORATION>”, “FUEL INJECTION SYSTEM”".

*1: Clear timing is at the moment OK is detected.

*2: Clear timing is when the same malfunction is detected in the 2nd trip.

RELATIONSHIP BETWEEN MIL, DTC, 1ST TRIP DTC AND DRIVING PATTERNS FOR “MISFIRE <EXHAUST QUALITY DETERIORATION>”, “FUEL INJECTION SYSTEM”

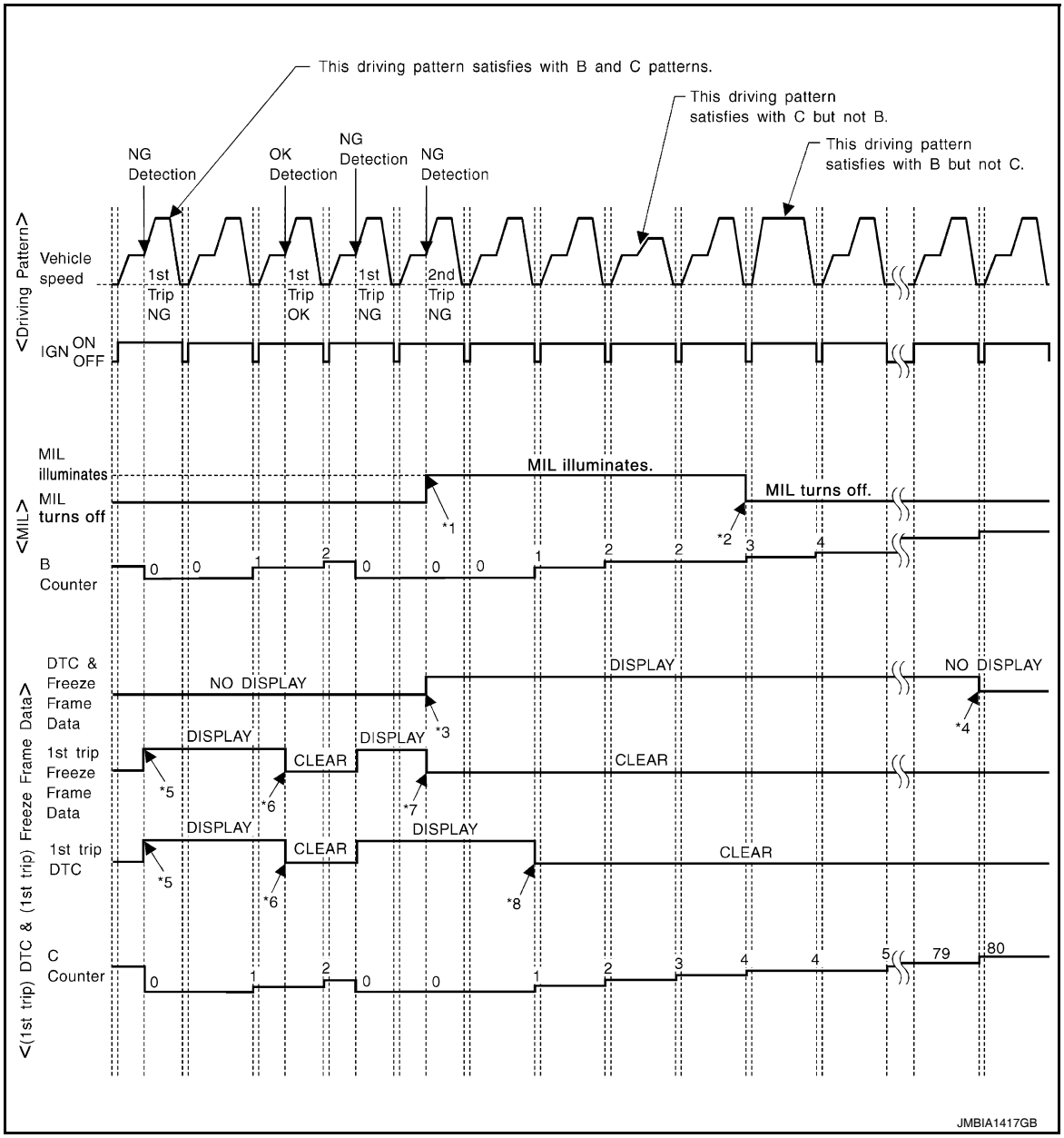

*1: When the same malfunction is detected in two consecutive trips, MIL will illuminate.

*2: MIL will turn off after vehicle is driven 3 times (pattern B) without any malfunctions.

*3: When the same malfunction is detected in two consecutive trips, the DTC and the freeze frame data will be stored in ECM.

*4: The DTC and the freeze frame data will not be displayed any longer after vehicle is driven 80 times (pattern C) without the same malfunction. (The DTC and the freeze frame data still remain in ECM.)

*5: When a malfunction is detected for the first time, the 1st trip DTC and the 1st trip freeze frame data will be stored in ECM.

*6: The 1st trip DTC and the 1st trip freeze frame data will be cleared at the moment OK is detected.

*7: When the same malfunction is detected in the 2nd trip, the 1st trip freeze frame data will be cleared.

*8: 1st trip DTC will be cleared when vehicle is driven once (pattern C) without the same malfunction after DTC is stored in ECM.

EXPLANATION FOR DRIVING PATTERNS FOR “MISFIRE <EXHAUST QUALITY DETERIORATION>”, “FUEL INJECTION SYSTEM”

<Driving Pattern B>

Driving pattern B means the vehicle operation as follows:

All components and systems should be monitored at least once by the OBD system.
- The B counter will be cleared when the malfunction is detected once regardless of the driving pattern.
- The B counter will be counted up when driving pattern B is satisfied without any malfunction.
- The MIL will go off when the B counter reaches 3. (*2 in “OBD SYSTEM OPERATION CHART”)

<Driving Pattern C>
Driving pattern C means the vehicle operation as follows:
The following conditions should be satisfied at the same time:
Engine speed: (Engine speed in the freeze frame data) ±375 rpm
Calculated load value: (Calculated load value in the freeze frame data) x (1±0.1) [%]
Engine coolant temperature (T) condition:
- When the freeze frame data shows lower than 70°C (158°F), “T” should be lower than 70°C (158°F).
- When the freeze frame data shows higher than or equal to 70°C (158°F), “T” should be higher than or equal to 70°C (158°F).

Example:
If the stored freeze frame data is as follows:
Engine speed: 850 rpm, Calculated load value: 30%, Engine coolant temperature: 80°C (176°F)
To be satisfied with driving pattern C, the vehicle should run under the following conditions:
Engine speed: 475 - 1,225 rpm, Calculated load value: 27 - 33%, Engine coolant temperature: more than 70°C (158°F)
- The C counter will be cleared when the malfunction is detected regardless of vehicle conditions above.
- The C counter will be counted up when vehicle conditions above is satisfied without the same malfunction.
- The DTC will not be displayed after C counter reaches 80.
- The 1st trip DTC will be cleared when C counter is counted once without the same malfunction after DTC is stored in ECM.

RELATIONSHIP BETWEEN MIL, DTC, 1ST TRIP DTC AND DRIVING PATTERNS EXCEPT FOR “MISFIRE <EXHAUST QUALITY DETERIORATION>”, “FUEL INJECTION SYSTEM”

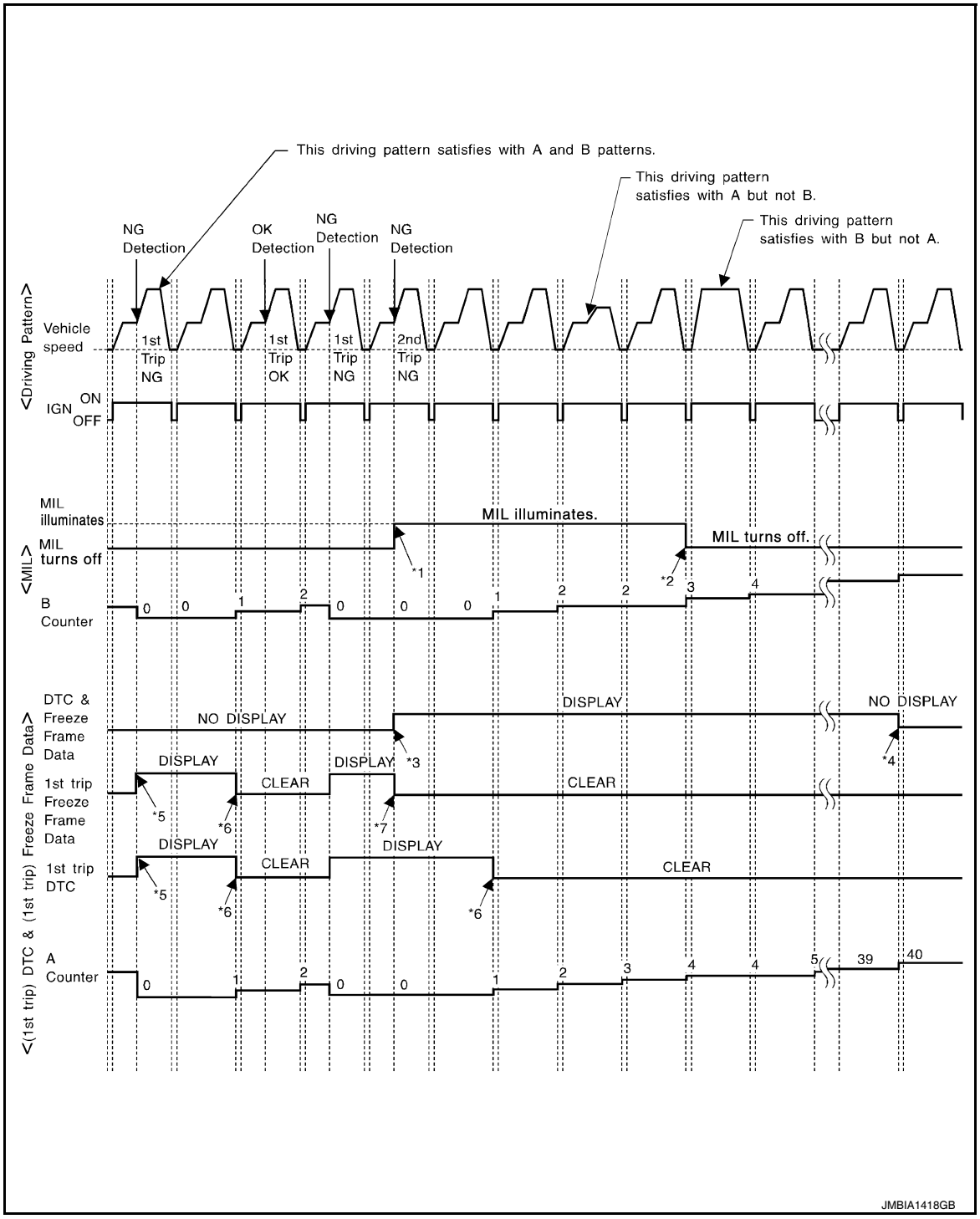

*1: When the same malfunction is detected in two consecutive trips, MIL will illuminate.

*2: MIL will turn off after vehicle is driven 3 times (pattern B) without any malfunctions.

*3: When the same malfunction is detected in two consecutive trips, the DTC and the freeze frame data will be stored in ECM.

*4: The DTC and the freeze frame data will not be displayed any longer after vehicle is driven 40 times (pattern A) without the same malfunction. (The DTC and the freeze frame data still remain in ECM.)

*5: When a malfunction is detected for the first time, the 1st trip DTC and the 1st trip freeze frame data will be stored in ECM.

*6: 1st trip DTC will be cleared after vehicle is driven once (pattern B) without the same malfunction.

*7: When the same malfunction is detected in the 2nd trip, the 1st trip freeze frame data will be cleared.

EXPLANATION FOR DRIVING PATTERNS EXCEPT FOR “MISFIRE <EXHAUST QUALITY DETERIORATION>”, “FUEL INJECTION SYSTEM”

<Driving Pattern A>

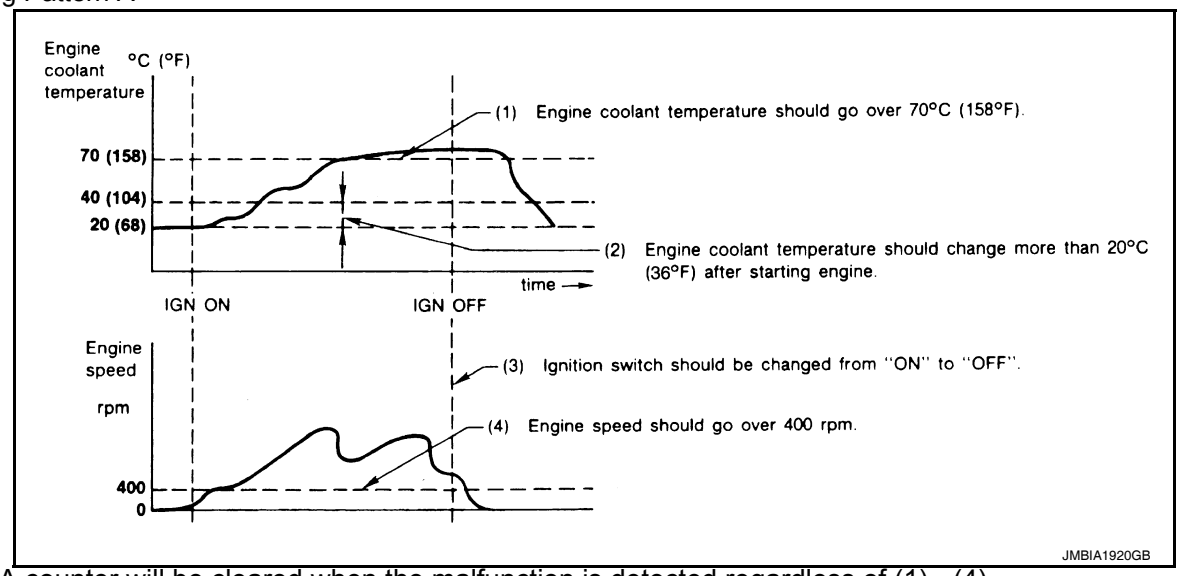

- The A counter will be cleared when the malfunction is detected regardless of (1) - (4).
- The A counter will be counted up when (1) - (4) are satisfied without the same malfunction.
- The DTC will not be displayed after the A counter reaches 40.

<Driving Pattern B>

Driving pattern B means the vehicle operation as follows:

All components and systems should be monitored at least once by the OBD system.

- The B counter will be cleared when the malfunction is detected once regardless of the driving pattern.
- The B counter will be counted up when driving pattern B is satisfied without any malfunctions.
- The MIL will go off when the B counter reaches 3 (*2 in “OBD SYSTEM OPERATION CHART”).

BASIC SERVICE PROCEDURE

Basic Inspection

INFOID:0000000005285165

1. INSPECTION START

1. Check service records for any recent repairs that may indicate a related malfunction, or a current need for scheduled maintenance.
2. Open engine hood and check the following:
- Harness connectors for improper connections
- Wiring harness for improper connections, pinches and cut
- Vacuum hoses for splits, kinks and improper connections
- Hoses and ducts for leaks
- Air cleaner clogging
- Gasket
3. Confirm that electrical or mechanical loads are not applied.
- Headlamp switch is OFF.
- Air conditioner switch is OFF.
- Rear window defogger switch is OFF.
- Steering wheel is in the straight-ahead position, etc.
4. Start engine and warm it up until engine coolant temperature indicator points the middle of gauge.
   Ensure engine stays below 1,000 rpm.

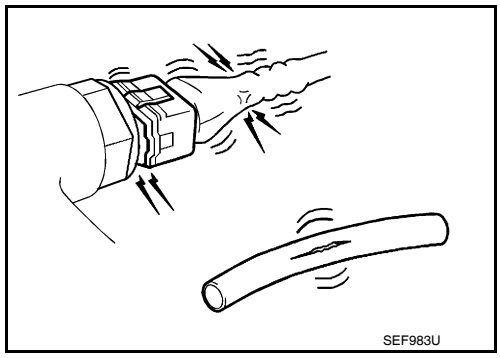
SEF983U

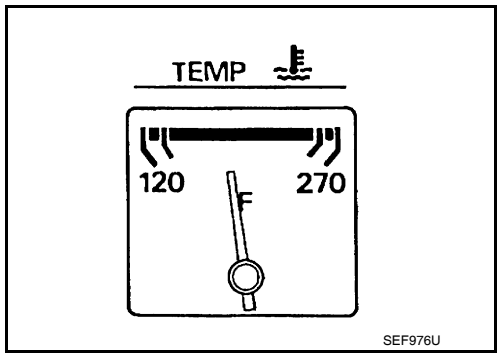

SEF976U

5. Run engine at about 2,000 rpm for about 2 minutes under no load.
6. Make sure that no DTC is displayed with CONSULT-III or GST.

OK or NG

OK >> GO TO 3.
NG >> GO TO 2.

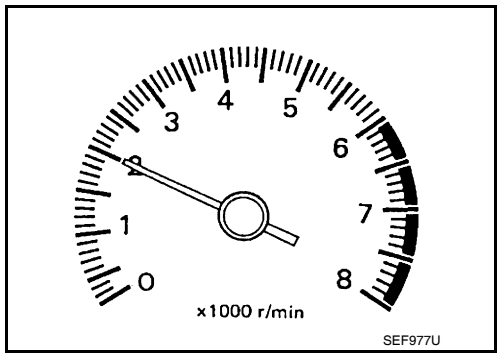

SEF977U

2. REPAIR OR REPLACE

Repair or replace components as necessary according to corresponding Diagnostic Procedure.

>> GO TO 3.

3. CHECK TARGET IDLE SPEED

With CONSULT-III

1. Run engine at about 2,000 rpm for about 2 minutes under no load.

2. Rev engine (2,000 to 3,000 rpm) two or three times under no load, then run engine at idle speed for about 1 minute.

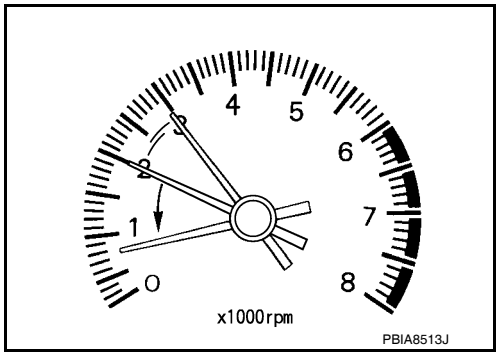

3. Read idle speed in “DATA MONITOR” mode with CONSULT-III. Refer to EC-652, "Idle Speed and Ignition Timing Check".

M/T: 675 ± 50 rpm (in Neutral position)
CVT: 700 ± 50 rpm (in P or N position)

Without CONSULT-III
1. Run engine at about 2,000 rpm for about 2 minutes under no load.
2. Rev engine (2,000 to 3,000 rpm) two or three times under no load, then run engine at idle speed for about 1 minute.
3. Check idle speed. Refer to EC-652, "Idle Speed and Ignition Timing Check".

M/T: 675 ± 50 rpm (in Neutral position)
CVT: 700 ± 50 rpm (in P or N position)

OK or NG

OK >> GO TO 10.
NG >> GO TO 4.

4. PERFORM ACCELERATOR PEDAL RELEASED POSITION LEARNING

1. Stop engine.
2. Perform EC-654, "Accelerator Pedal Released Position Learning".

>> GO TO 5.

5. PERFORM THROTTLE VALVE CLOSED POSITION LEARNING

Perform EC-654, "Throttle Valve Closed Position Learning".

>> GO TO 6.

6. PERFORM IDLE AIR VOLUME LEARNING

Refer to EC-654, "Idle Air Volume Learning".
Is Idle Air Volume Learning carried out successfully?

Yes or No

Yes >> GO TO 7.
No >> 1. Follow the instruction of Idle Air Volume Learning.
2. GO TO 4.

7. CHECK TARGET IDLE SPEED AGAIN

With CONSULT-III
1. Start engine and warm it up to normal operating temperature.
2. Read idle speed in “DATA MONITOR” mode with CONSULT-III. Refer to EC-652, "Idle Speed and Ignition Timing Check".

M/T: 675 ± 50 rpm (in Neutral position)

CVT: 700 ± 50 rpm (in P or N position)

Without CONSULT-III

1. Start engine and warm it up to normal operating temperature.
2. Check idle speed. Refer to EC-652, "Idle Speed and Ignition Timing Check".

M/T: 675 ± 50 rpm (in Neutral position)

CVT: 700 ± 50 rpm (in P or N position)

OK or NG

OK >> GO TO 10.
NG >> GO TO 8.

8. DETECT MALFUNCTIONING PART

Check the following.

- Check crankshaft position sensor (POS) and circuit.
  Refer to EC-870.
- Check camshaft position sensor (PHASE) and circuit.
  Refer to EC-876.

OK or NG

OK >> GO TO 9.
NG >> 1. Repair or replace.
2. GO TO 4.

9. CHECK ECM FUNCTION

1. Substitute another known-good ECM to check ECM function. (ECM may be the cause of an incident, but this is a rare case.)
2. Perform initialization of NVIS (NATS) system and registration of all NVIS (NATS) ignition key IDs.
   Refer to BL-171, "ECM Re-communicating Function".

>> GO TO 4.

10. CHECK IGNITION TIMING

1. Run engine at idle.
2. Check ignition timing with a timing light.
   Refer to EC-652, "Idle Speed and Ignition Timing Check".

- Timing indicator (1)

M/T: 6 ± 5° BTDC (in Neutral position)

CVT: 6 ± 5° BTDC (in P or N position)

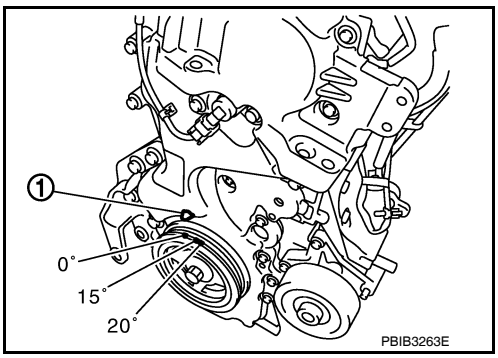

OK or NG

OK >> GO TO 19.
NG >> GO TO 11.

11. PERFORM ACCELERATOR PEDAL RELEASED POSITION LEARNING

1. Stop engine.
2. Perform EC-654, "Accelerator Pedal Released Position Learning".

>> GO TO 12.

12. PERFORM THROTTLE VALVE CLOSED POSITION LEARNING

Perform EC-654, "Throttle Valve Closed Position Learning".

>> GO TO 13.

13. PERFORM IDLE AIR VOLUME LEARNING

Refer to EC-654, "Idle Air Volume Learning".

Is Idle Air Volume Learning carried out successfully?

Yes or No

Yes >> GO TO 14.
No >> 1. Follow the instruction of Idle Air Volume Learning.
2. GO TO 4.

14. CHECK TARGET IDLE SPEED AGAIN

With CONSULT-III

1. Start engine and warm it up to normal operating temperature.
2. Read idle speed in “DATA MONITOR” mode with CONSULT-III. Refer to EC-652, "Idle Speed and Ignition Timing Check".

M/T: 675 ± 50 rpm (in Neutral position)
CVT: 700 ± 50 rpm (in P or N position)

Without CONSULT-III

1. Start engine and warm it up to normal operating temperature.
2. Check idle speed. Refer to EC-652, "Idle Speed and Ignition Timing Check".

M/T: 675 ± 50 rpm (in Neutral position)
CVT: 700 ± 50 rpm (in P or N position)

OK or NG

OK >> GO TO 15.
NG >> GO TO 17.

15. CHECK IGNITION TIMING AGAIN

1. Run engine at idle.
2. Check ignition timing with a timing light.
Refer to EC-652, "Idle Speed and Ignition Timing Check".

- Timing indicator (1)

M/T: 6 ± 5° BTDC (in Neutral position)
CVT: 6 ± 5° BTDC (in P or N position)

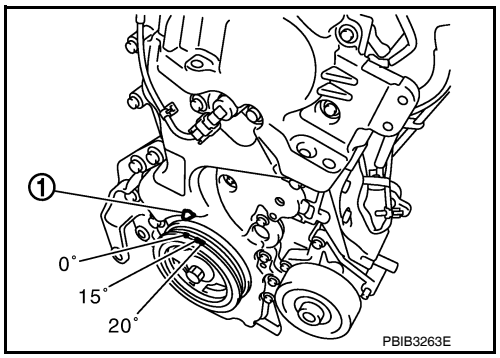

OK or NG

OK >> GO TO 19
NG >> GO TO 16.

16. CHECK TIMING CHAIN INSTALLATION

Check timing chain installation. Refer to EM-40.

OK or NG

OK >> GO TO 17.
NG >> 1. Repair the timing chain installation.
2. GO TO 4.

17. DETECT MALFUNCTIONING PART

Check the following.

- Check crankshaft position sensor (POS) and circuit.
Refer to EC-870.
- Check camshaft position sensor (PHASE) and circuit.
Refer to EC-876.

OK or NG

OK >> GO TO 18.
NG >> 1. Repair or replace.

2. GO TO 4.

18. CHECK ECM FUNCTION

1. Substitute another known-good ECM to check ECM function. (ECM may be the cause of an incident, but this is a rare case.)
2. Perform initialization of NVIS (NATS) system and registration of all NVIS (NATS) ignition key IDs. Refer to BL-171, "ECM Re-communicating Function".

>> GO TO 4.

19. INSPECTION END

Did you replace ECM, referring this Basic Inspection procedure?

Yes or No

Yes >> 1. Perform EC-654, "VIN Registration".
2. **INSPECTION END**

No >> **INSPECTION END**

Idle Speed and Ignition Timing Check

INFOID:0000000005285166

IDLE SPEED

WITH CONSULT-III

Check idle speed in “DATA MONITOR” mode with CONSULT-III.

WITH GST

Check idle speed in Service $01 with GST.

IGNITION TIMING

Any of following two methods may be used.

Method A

1. Attach timing light to loop wire (1) as shown.
   - ⇦ : Vehicle front

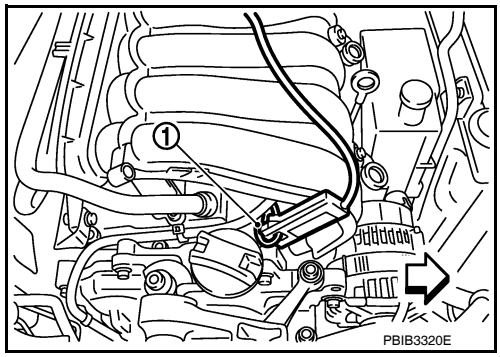

2. Check ignition timing.
   - Timing indicator (1)

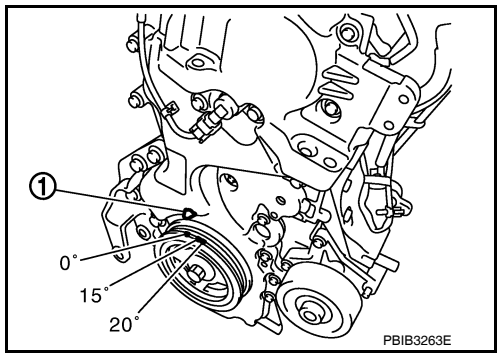

Method B

1. Remove No. 4 ignition coil (1).

- ⇦ : Vehicle front

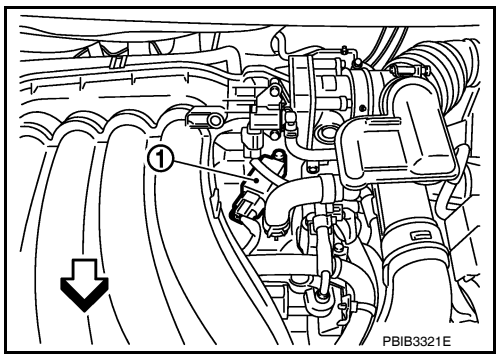

2. Connect No. 4 ignition coil (1) and No. 4 spark plug with suitable high-tension wire (A) as shown, and attach timing light clamp (B) to this wire.
   - ⇦ : Vehicle front

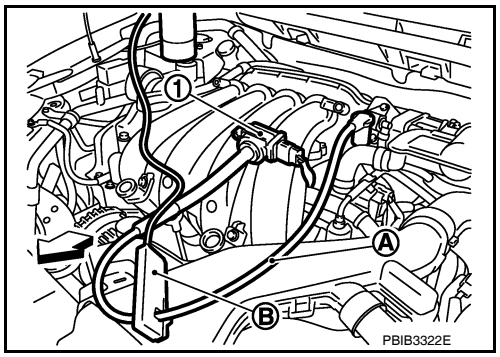

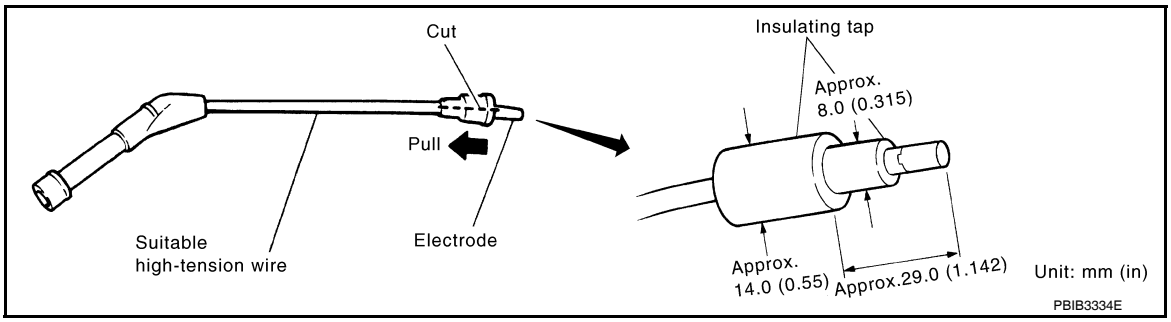

3. Check ignition timing.
   - Timing indicator (1)

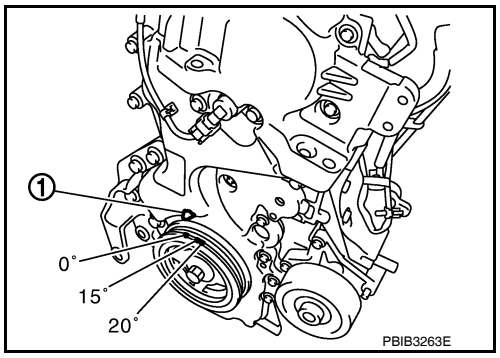

Procedure After Replacing ECM

INFOID:0000000005285167

When replacing ECM, the following procedure must be performed.

1. Perform initialization of NVIS (NATS) system and registration of all NVIS (NATS) ignition key IDs. Refer to BL-171, "ECM Re-communicating Function".
2. Perform EC-654, "VIN Registration".
3. Perform EC-654, "Accelerator Pedal Released Position Learning".
4. Perform EC-654, "Throttle Valve Closed Position Learning".

5. Perform EC-654, "Idle Air Volume Learning".

VIN Registration

INFOID:0000000005285168

DESCRIPTION

VIN Registration is an operation to registering VIN in ECM. It must be performed each time ECM is replaced.

NOTE:

Accurate VIN which is registered in ECM may be required for Inspection & Maintenance (I/M).

OPERATION PROCEDURE

WITH CONSULT-III

1. Check the VIN of the vehicle and note it. Refer to GI-45.
2. Turn ignition switch ON and engine stopped.
3. Select “VIN REGISTRATION” in “WORK SUPPORT” mode.
4. Follow the instruction of CONSULT-III display.

Accelerator Pedal Released Position Learning

INFOID:0000000005285169

DESCRIPTION

Accelerator Pedal Released Position Learning is an operation to learn the fully released position of the accelerator pedal by monitoring the accelerator pedal position sensor output signal. It must be performed each time harness connector of accelerator pedal position sensor or ECM is disconnected.

OPERATION PROCEDURE

1. Make sure that accelerator pedal is fully released.
2. Turn ignition switch ON and wait at least 2 seconds.
3. Turn ignition switch OFF and wait at least 10 seconds.
4. Turn ignition switch ON and wait at least 2 seconds.
5. Turn ignition switch OFF and wait at least 10 seconds.

Throttle Valve Closed Position Learning

INFOID:0000000005285170

DESCRIPTION

Throttle Valve Closed Position Learning is an operation to learn the fully closed position of the throttle valve by monitoring the throttle position sensor output signal. It must be performed each time harness connector of electric throttle control actuator or ECM is disconnected.

OPERATION PROCEDURE

1. Make sure that accelerator pedal is fully released.
2. Turn ignition switch ON.
3. Turn ignition switch OFF and wait at least 10 seconds.
   Make sure that throttle valve moves during above 10 seconds by confirming the operating sound.

Idle Air Volume Learning

INFOID:0000000005285171

DESCRIPTION

Idle Air Volume Learning is an operation to learn the idle air volume that keeps each engine within the specific range. It must be performed under any of the following conditions:

- Each time electric throttle control actuator or ECM is replaced.
- Idle speed or ignition timing is out of specification.

PREPARATION

Before performing Idle Air Volume Learning, make sure that all of the following conditions are satisfied.
Learning will be cancelled if any of the following conditions are missed for even a moment.

- Battery voltage: More than 12.9 V (At idle)
- Engine coolant temperature: 70 - 95°C (158 - 203°F)
- Park/neutral position (PNP) switch (M/T): ON
- Selector lever (CVT): P or N

- Electric load switch: OFF
  [Air conditioner, headlamp rear window defogger]
  On vehicles equipped with daytime light systems, if the parking brake is applied before the engine is started the headlamp will not be illuminated.
- Steering wheel: Neutral (Straight-ahead position)
- Vehicle speed: Stopped
- Transmission: Warmed-up
- For CVT models
- With CONSULT-III: Drive vehicle until “ATF TEMP SEN” in “DATA MONITOR” mode of “TRANSMISSION” system indicates less than 0.9 V.
- Without CONSULT-III: Drive vehicle for 10 minutes.
- For M/T models
- Drive vehicle for 10 minutes.

OPERATION PROCEDURE

WITH CONSULT-III

1. Perform EC-654, "Accelerator Pedal Released Position Learning".
2. Perform EC-654, "Throttle Valve Closed Position Learning".
3. Start engine and warm it up to normal operating temperature.
4. Check that all items listed under the topic PREPARATION (previously mentioned) are in good order.
5. Select “IDLE AIR VOL LEARN” in “WORK SUPPORT” mode.
6. Touch “START” and wait 20 seconds.
7. Make sure that “CMPLT” is displayed on CONSULT-III screen. If “CMPLT” is not displayed, Idle Air Volume Learning will not be carried out successfully. In this case, find the cause of the incident by referring to the DIAGNOSTIC PROCEDURE below.
8. Rev up the engine two or three times and make sure that idle speed and ignition timing are within the specifications.
   Refer to EC-648, "Basic Inspection".

Item	Specification
Idle speed	M/T: 675 ± 50 rpm (in Neutral position) CVT: 700 ± 50 rpm (in P or N position)
Ignition timing	M/T: 6 ± 5° BTDC (in Neutral position) CVT: 6 ± 5° BTDC (in P or N position)

WITHOUT CONSULT-III

NOTE:
- **It is better to count the time accurately with a clock.**
- **It is impossible to switch the diagnostic mode when an accelerator pedal position sensor circuit has a malfunction.**

1. Perform EC-654, "Accelerator Pedal Released Position Learning".
2. Perform EC-654, "Throttle Valve Closed Position Learning".
3. Start engine and warm it up to normal operating temperature.
4. Check that all items listed under the topic PREPARATION (previously mentioned) are in good order.
5. Turn ignition switch OFF and wait at least 10 seconds.
6. Confirm that accelerator pedal is fully released, turn ignition switch ON and wait 3 seconds.
7. Repeat the following procedure quickly five times within 5 seconds.

a. Fully depress the accelerator pedal.
b. Fully release the accelerator pedal.

8. Wait 7 seconds, fully depress the accelerator pedal and keep it for approx. 20 seconds until the MIL stops blinking and turned ON.
9. Fully release the accelerator pedal within 3 seconds after the MIL turned ON.
10. Start engine and let it idle.

11. Wait 20 seconds.

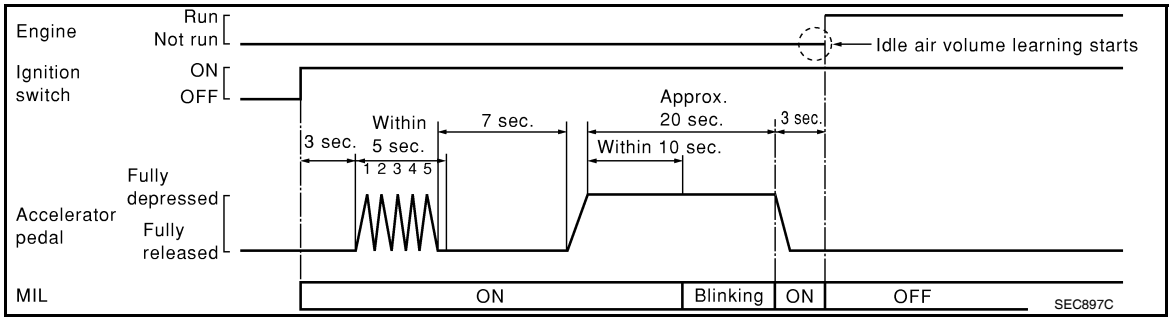

12. Rev up the engine two or three times and make sure that idle speed and ignition timing are within the specifications. Refer to EC-648, "Basic Inspection".

Item	Specification
Idle speed	M/T: 675 ± 50 rpm (in Neutral position) CVT: 700 ± 50 rpm (in P or N position)
Ignition timing	M/T: 6 ± 5° BTDC (in Neutral position) CVT: 6 ± 5° BTDC (in P or N position)

13. If idle speed and ignition timing are not within the specification, Idle Air Volume Learning will not be carried out successfully. In this case, find the cause of the incident by referring to the DIAGNOSTIC PROCEDURE below.

DIAGNOSTIC PROCEDURE

If idle air volume learning cannot be performed successfully, proceed as follows:

1. **Check that throttle valve is fully closed.**
2. **Check PCV valve operation.**
3. **Check that downstream of throttle valve is free from air leakage.**
4. **When the above three items check out OK, engine component parts and their installation condition are questionable. Check and eliminate the cause of the incident.**
   It is useful to perform EC-698.
5. **If any of the following conditions occur after the engine has started, eliminate the cause of the incident and perform Idle air volume learning all over again:**

- **Engine stalls.**
- **Erroneous idle.**

Fuel Pressure Check

INFOID:0000000005285172

FUEL PRESSURE RELEASE

WITH CONSULT-III

1. Turn ignition switch ON.
2. Perform “FUEL PRESSURE RELEASE” in “WORK SUPPORT” mode with CONSULT-III.
3. Start engine.
4. After engine stalls, crank it two or three times to release all fuel pressure.
5. Turn ignition switch OFF.

WITHOUT CONSULT-III

1. Remove fuel pump fuse (1) located in IPDM E/R (2).
   - ⇦: Vehicle front
2. Start engine.
3. After engine stalls, crank it two or three times to release all fuel pressure.
4. Turn ignition switch OFF.
5. Reinstall fuel pump fuse after servicing fuel system.

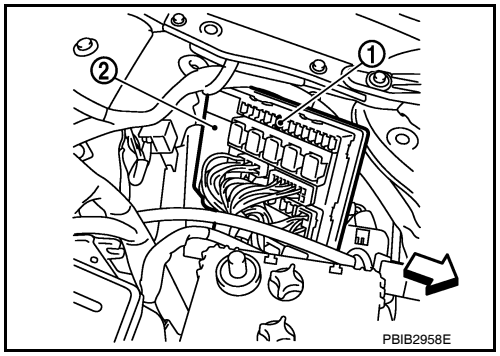

FUEL PRESSURE CHECK

CAUTION:

Before disconnecting fuel line, release fuel pressure from fuel line to eliminate danger.

NOTE:

- **Prepare pans or saucers under the disconnected fuel line because the fuel may spill out. The fuel pressure cannot be completely released because B16 models do not have fuel return system.**
- **The fuel hose connection method used when taking fuel pressure check must not be used for other purposes.**
- **Be careful not to scratch or put debris around connection area when servicing, so that the quick connector maintains seal ability with O-rings inside.**
- **Do not perform fuel pressure check with electrical systems operating (i.e. lights, rear defogger, A/C, etc.) Fuel pressure gauge may indicate false readings due to varying engine load and changes in manifold vacuum.**

1. Release fuel pressure to zero. Refer to "FUEL PRESSURE RELEASE".
2. Prepare fuel hose for fuel pressure check B and fuel tube adapter (KV10118400) D, then connect fuel pressure gauge A.
   - ⇦: To quick connector
   - ⬅: To fuel tube (engine side)
   - C: Clamp
   - Use suitable fuel hose for fuel pressure check (genuine NISSAN fuel hose without quick connector).
   - To avoid unnecessary force or tension to hose, use moderately long fuel hose for fuel pressure check.
   - Do not use the fuel hose for checking fuel pressure with damage or cracks on it.
   - Use pressure gauge to check fuel pressure.

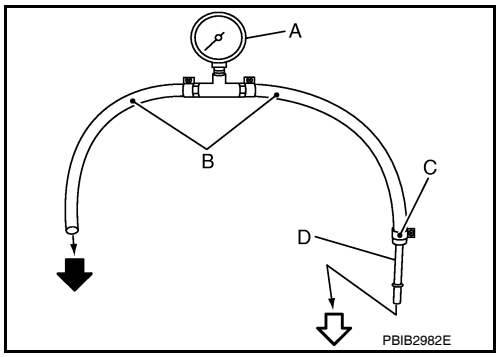

3. Remove fuel hose. Refer to EM-18.
   - Do not twist or kink fuel hose because it is plastic hose.
4. Connect fuel hose for fuel pressure check (1) to fuel tube (engine side) with clamp (2) as shown in the figure.
   - No.2 spool (5)
   - Wipe off oil or dirt from hose insertion part using cloth moistened with gasoline.
   - Apply proper amount of gasoline between top of the fuel tube (3) and No.1 spool (4).
   - Insert fuel hose for fuel pressure check until it touches the No.1 spool on fuel tube.
   - Use NISSAN genuine hose clamp (part number: 16439 N4710 or 16439 40U00).
   - When reconnecting fuel line, always use new clamps.
   - Use a torque driver to tighten clamps.
   - Install hose clamp to the position within 1 - 2 mm (0.04 - 0.08 in).

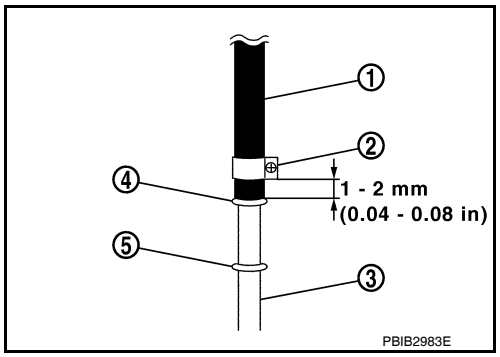

Tightening torque: 1 - 1.5 N·m (0.1 - 0.15 kg-m, 9 - 13 in-lb)

- Make sure that clamp screw does not contact adjacent parts.

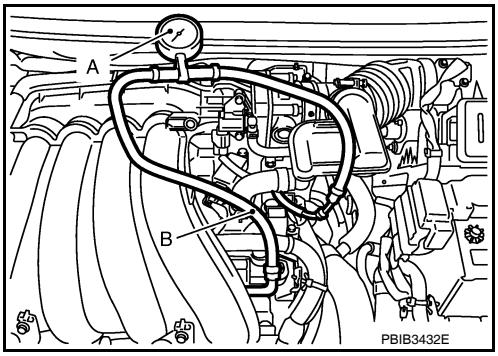

5. Connect fuel tube adapter to quick connector.
   - A: Fuel pressure gauge
   - B: Fuel hose for fuel pressure check
6. After connecting fuel hose for fuel pressure check, pull the hose with a force of approximately 98 N (10 kg, 22 lb) to confirm fuel tube does not come off.
7. Turn ignition switch ON and check for fuel leakage.
8. Start engine and check for fuel leakage.
9. Read the indication of fuel pressure gauge.
   - Do not perform fuel pressure check with system operating. Fuel pressure gauge may indicate false readings.
   - During fuel pressure check, confirm for fuel leakage from fuel connection every 3 minutes.

At idling: Approximately 350 kPa (3.57 kg/cm^2, 51 psi)

10. If result is unsatisfactory, go to next step.
11. Check the following.
    - Fuel hoses and fuel tubes for clogging
    - Fuel filter for clogging
    - Fuel pump
    - Fuel pressure regulator for clogging

    If OK, replace fuel pressure regulator.
    If NG, repair or replace.
12. Check the following.
    - Fuel hoses and fuel tubes for clogging
    - Fuel filter for clogging
    - Fuel pump
    - Fuel pressure regulator for clogging

    If OK, replace fuel pressure regulator.
    If NG, repair or replace.
13. Before disconnecting fuel pressure gauge and fuel pressure adapter J-44321-6, release fuel pressure to zero. Refer to "FUEL PRESSURE RELEASE".

TROUBLE DIAGNOSIS

Trouble Diagnosis Introduction

INFOID:0000000005285173

INTRODUCTION

The engine has an ECM to control major systems such as fuel control, ignition control, idle air control system, etc. The ECM accepts input signals from sensors and instantly drives actuators. It is essential that both input and output signals are proper and stable. At the same time, it is important that there are no malfunctions such as vacuum leaks, fouled spark plugs, or other malfunctions with the engine.

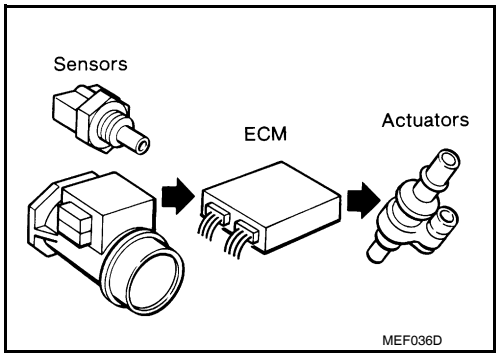

It is much more difficult to diagnose an incident that occurs intermittently rather than continuously. Most intermittent incidents are caused by poor electric connections or improper wiring. In this case, careful checking of suspected circuits may help prevent the replacement of good parts.

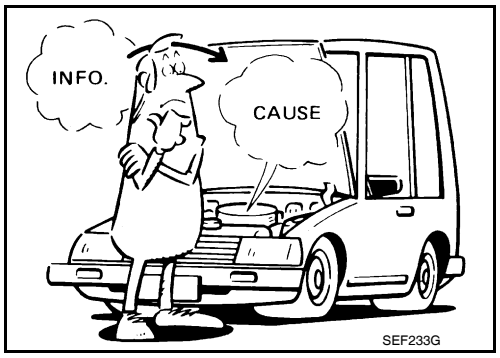

A visual check only may not find the cause of the incidents. A road test with CONSULT-III (or GST) or a circuit tester connected should be performed. Follow the Work Flow on "WORK FLOW".
Before undertaking actual checks, take a few minutes to talk with a customer who approaches with a drivability complaint. The customer can supply good information about such incidents, especially intermittent ones. Find out what symptoms are present and under what conditions they occur. A Diagnostic Worksheet like the example on "Worksheet Sample" should be used.
Start your diagnosis by looking for conventional malfunctions first. This will help troubleshoot drivability malfunctions on an electronically controlled engine vehicle.

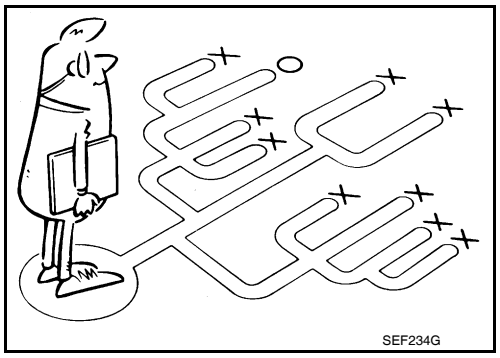

WORK FLOW

Overall Sequence

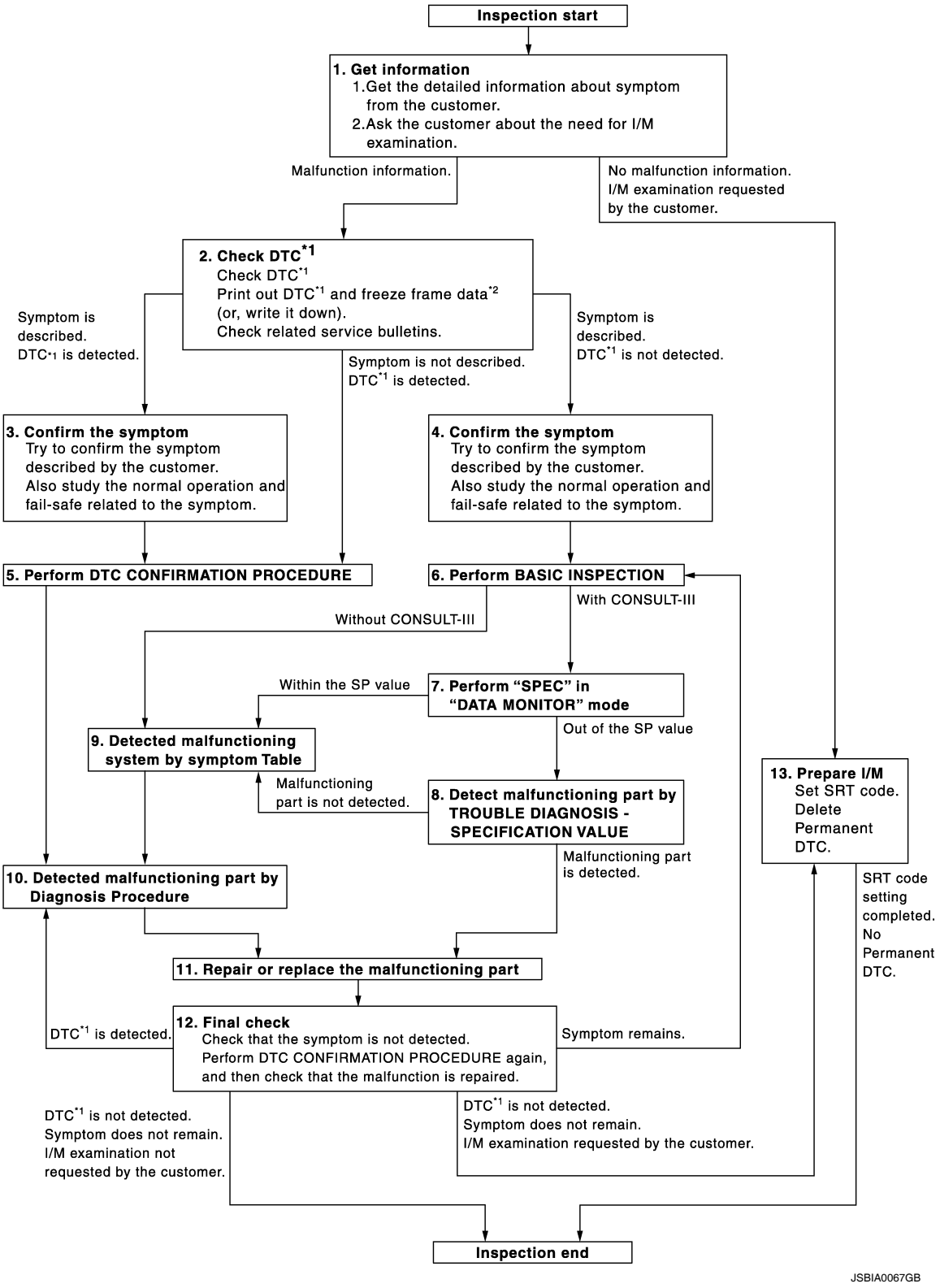

*1: Include 1st trip DTC.

*2: Include 1st trip freeze frame data.

Detailed Flow

1.GET INFORMATION FOR SYMPTOM

1. Get the detailed information from the customer about the symptom (the condition and the environment when the incident/malfunction occurred) using the “Diagnostic Work Sheet”.
2. Ask if the customer requests I/M examination.

Malfunction information, obtained>>GO TO 2.
No malfunction information, but a request for I/M examination>>GO TO 13.

2.CHECK DTC

1. Check DTC.
2. Perform the following procedure if DTC is displayed.
- Record DTC and freeze frame data. (Print them out with CONSULT-III or GST.)
- Erase DTC. (Refer to EC-617, "Emission-related Diagnostic Information".)
- Study the relationship between the cause detected by DTC and the symptom described by the customer. (Symptom Table is useful. Refer to EC-666, "Symptom Matrix Chart".)
3. Check related service bulletins for information.

Are any symptoms described and any DTCs detected?

Symptom is described, DTC is detected>>GO TO 3.
Symptom is described, DTC is not detected>>GO TO 4.
Symptom is not described, DTC is detected>>GO TO 5.

3.CONFIRM THE SYMPTOM

Try to confirm the symptom described by the customer (except MIL ON).
Also study the normal operation and fail-safe related to the symptom.
Diagnosis Work Sheet is useful to verify the incident.
Verify relation between the symptom and the condition when the symptom is detected.

>> GO TO 5.

4.CONFIRM THE SYMPTOM

Try to confirm the symptom described by the customer.
Also study the normal operation and fail-safe related to the symptom.
Diagnosis Work Sheet is useful to verify the incident.
Verify relation between the symptom and the condition when the symptom is detected.

>> GO TO 6.

5.PERFORM DTC CONFIRMATION PROCEDURE

Perform DTC CONFIRMATION PROCEDURE for the displayed DTC, and then make sure that DTC is detected again.
If two or more DTCs are detected, refer to EC-664, "DTC Inspection Priority Chart" and determine trouble diagnosis order.

NOTE:
- Freeze frame data is useful if the DTC is not detected.
- Perform Component Function Check if DTC CONFIRMATION PROCEDURE is not included on Service Manual. This simplified check procedure is an effective alternative though DTC cannot be detected during this check.
  If the result of Component Function Check is NG, it is the same as the detection of DTC by DTC CONFIRMATION PROCEDURE.

Is DTC detected?

YES >> GO TO 10.
NO >> Check according to EC-706, "Description".

6.PERFORM BASIC INSPECTION

Perform EC-648, "Basic Inspection".

Do you have CONSULT-III?

YES >> GO TO 7.
NO >> GO TO 9.

7. PERFORM SPEC IN DATA MONITOR MODE

With CONSULT-III
Make sure that “MAS A/F SE-B1”, “MAS A/F SE-B2”, “B/FUEL SCHDL”, “A/F ALPHA-B1”, and “A/F ALPHA-B2” are within the SP value using CONSULT-III “SPEC” in “DATA MONITOR” mode. Refer to EC-698, "Inspection Procedure".

Is the measurement value within the SP value?

YES >> GO TO 9.
NO >> GO TO 8.

8. DETECT MALFUNCTIONING PART BY TROUBLE DIAGNOSIS - SPECIFICATION VALUE

Detect malfunctioning part according to EC-698, "Diagnosis Procedure".

Is a malfunctioning part detected?

YES >> GO TO 11.
NO >> GO TO 9.

9. DETECT MALFUNCTIONING SYSTEM BY SYMPTOM TABLE

Detect malfunctioning system according to EC-666, "Symptom Matrix Chart" based on the confirmed symptom in step 4, and determine the trouble diagnosis order based on possible causes and symptoms.

>> GO TO 10.

10. DETECT MALFUNCTIONING PART BY DIAGNOSIS PROCEDURE

Inspect according to Diagnosis Procedure of the system.
NOTE:
The Diagnosis Procedure in EC section described based on open circuit inspection. A short circuit inspection is also required for the circuit check in the Diagnosis Procedure. For details, refer to GI-26, "How to Perform Efficient Diagnosis for an Electrical Incident".

Is a malfunctioning part detected?

YES >> GO TO 11.
NO >> Monitor input data from related sensors or check voltage of related ECM terminals using CONSULT-III. Refer to EC-679, "ECM Terminal and Reference Value", EC-694, "CONSULT-III Reference Value in Data Monitor".

11. REPAIR OR REPLACE THE MALFUNCTIONING PART

1. Repair or replace the malfunctioning part.
2. Reconnect parts or connectors disconnected during Diagnosis Procedure again after repair and replacement.
3. Check DTC. If DTC is displayed, erase it. Refer to EC-617, "Emission-related Diagnostic Information".

>> GO TO 12.

12. FINAL CHECK

When DTC was detected in step 2, perform DTC CONFIRMATION PROCEDURE or Component Function Check again, and then make sure that the malfunction have been completely repaired.
When symptom was described from the customer, refer to confirmed symptom in step 3 or 4, and make sure that the symptom is not detected.

Is DTC detected and does symptom remain?

YES-1 >> DTC is detected: GO TO 10.
YES-2 >> Symptom remains: GO TO 6.
NO-1 >> No request for I/M examination from the customer: Before returning the vehicle to the customer, always erase unnecessary DTC in ECM and TCM (Transmission Control Module). Refer to EC-617, "Emission-related Diagnostic Information".
NO-2 >> I/M examination, requested from the customer: GO TO 13.

13. PREPARE FOR I/M EXAMINATION

1. Set SRT codes. Refer to EC-617, "Emission-related Diagnostic Information".
2. Erase permanent DTCs. Refer to EC-617, "Emission-related Diagnostic Information".

>> INSPECTION END

DIAGNOSTIC WORKSHEET

Description

There are many operating conditions that lead to the malfunction of engine components. A good grasp of such conditions can make troubleshooting faster and more accurate.

In general, each customer feels differently about an incident. It is important to fully understand the symptoms or conditions for a customer complaint.

Utilize a diagnostic worksheet as shown in the following "Worksheet Sample" in order to organize all the information for troubleshooting.

Some conditions may cause the MIL to come on steady or blink and DTC to be detected. Examples:

- Vehicle ran out of fuel, which caused the engine to misfire.
- Fuel filler cap was left off or incorrectly screwed on, allowing fuel to evaporate into the atmosphere.

KEY POINTS

WHAT ..... Vehicle & engine model
WHEN ..... Date, Frequencies
WHERE..... Road conditions
HOW ..... Operating conditions, Weather conditions, Symptoms

SEF907L

Worksheet Sample

Customer name MR/MS		Model & Year	VIN
Engine #		Trans.	Mileage
Incident Date		Manuf. Date	In Service Date
Fuel and fuel filler cap		☐ Vehicle ran out of fuel causing misfire ☐ Fuel filler cap was left off or incorrectly screwed on.	
Symptoms	☐ Startability	☐ Impossible to start ☐ No combustion ☐ Partial combustion ☐ Partial combustion affected by throttle position ☐ Partial combustion NOT affected by throttle position ☐ Possible but hard to start ☐ Others [ ]	
	☐ Idling	☐ No fast idle ☐ Unstable ☐ High idle ☐ Low idle ☐ Others [ ]	
	☐ Driveability	☐ Stumble ☐ Surge ☐ Knock ☐ Lack of power ☐ Intake backfire ☐ Exhaust backfire ☐ Others [ ]	
	☐ Engine stall	☐ At the time of start ☐ While idling ☐ While accelerating ☐ While decelerating ☐ Just after stopping ☐ While loading	
Incident occurrence		☐ Just after delivery ☐ Recently ☐ In the morning ☐ At night ☐ In the daytime	
Frequency		☐ All the time ☐ Under certain conditions ☐ Sometimes	
Weather conditions		☐ Not affected	
	Weather	☐ Fine ☐ Raining ☐ Snowing ☐ Others [ ]	
	Temperature	☐ Hot ☐ Warm ☐ Cool ☐ Cold ☐ Humid °F	
Engine conditions		☐ Cold ☐ During warm-up ☐ After warm-up Engine speed 0 2,000 4,000 6,000 8,000 rpm	
Road conditions		☐ In town ☐ In suburbs ☐ Highway ☐ Off road (up/down)	
Driving conditions		☐ Not affected ☐ At starting ☐ While idling ☐ At racing ☐ While accelerating ☐ While cruising ☐ While decelerating ☐ While turning (RH/LH) Vehicle speed 0 10 20 30 40 50 60 MPH	
Malfunction indicator lamp		☐ Turned on ☐ Not turned on	

MTBL0017

DTC Inspection Priority Chart

INFOID:0000000005285174

If some DTCs are displayed at the same time, perform inspections one by one based on the following priority chart.

Priority	Detected items (DTC)
1	• U0101 U0140 U1001 CAN communication line • P0101 P0102 P0103 Mass air flow sensor • P0112 P0113 P0127 Intake air temperature sensor • P0116 P0117 P0118 P0125 Engine coolant temperature sensor • P0122 P0123 P0222 P0223 P1225 P1226 P2135 Throttle position sensor • P0128 Thermostat function • P0181 P0182 P0183 Fuel tank temperature sensor • P0196, P0197, P0198 Engine oil temperature sensor • P0327 P0328 Knock sensor • P0335 Crankshaft position sensor (POS) • P0340 Camshaft position sensor (PHASE) • P0460 P0461 P0462 P0463 Fuel level sensor • P0500 Vehicle speed sensor • P0605 P0607ECM • P0643 Sensor power supply • P0705 Transmission range switch • P0850 Park/neutral position (PNP) switch • P1610 - P1615 NATS • P2122 P2123 P2127 P2128 P2138 Accelerator pedal position sensor
2	• P0031 P0032 Air fuel ratio (A/F) sensor 1 heater • P0037 P0038 Heated oxygen sensor 2 heater • P0075 Intake valve timing control solenoid valve • P0130 P0131 P0132 P0133 P2A00 Air fuel ratio (A/F) sensor 1 • P0137 P0138 P0139 Heated oxygen sensor 2 • P0441 EVAP control system purge flow monitoring • P0443 P0444 P0445 EVAP canister purge volume control solenoid valve • P0447 P0448 EVAP canister vent control valve • P0451 P0452 P0453 EVAP control system pressure sensor • P0603 ECM power supply • P1217 Engine over temperature (OVERHEAT) • P1805 Brake switch • P2100 P2103 Throttle control motor relay • P2101 Electric throttle control function • P2118 Throttle control motor
3	• P0011 Intake valve timing control • P0171 P0172 Fuel injection system function • P0300 - P0304 Misfire • P0420 Three way catalyst function • P0442 P0456 EVAP control system (SMALL LEAK, VERY SMALL LEAK) • P0455 EVAP control system (GROSS LEAK) • P0506 P0507 Idle speed control system • P0710 P0715 P0720 P0740 P0744 P0745 P0746 P0776 P0778 P0840 P0845 P1740 P1777 P1778 CVT related sensors, solenoid valves and switches • P1148 Closed loop control • P1212 TCS communication line • P1421 Cold start control • P1564 ASCD steering switch • P1572 ASCD brake switch • P1574 ASCD vehicle speed sensor • P1715 Input speed sensor • P2119 Electric throttle control actuator

Fail-Safe Chart

INFOID:0000000005285175

When the DTC listed below is detected, the ECM enters fail-safe mode and the MIL lights up.

DTC No.	Detected items	Engine operating condition in fail-safe mode
P0102 P0103	Mass air flow sensor circuit	Engine speed will not rise more than 2,400 rpm due to the fuel cut.
P0117 P0118	Engine coolant temperature sensor circuit	Engine coolant temperature will be determined by ECM based on the following condition. CONSULT-III displays the engine coolant temperature decided by ECM. Condition: Engine coolant temperature decided (CONSULT-III display) Just as ignition switch is turned ON or START: 40°C (104°F) Approx 4 minutes or more after engine starting: 80°C (176°F) Except as shown above: 40 - 80°C (104 - 176°F) (Depends on the time) When the fail-safe system for engine coolant temperature sensor is activated, the cooling fan operates while engine is running.
P0122 P0123 P0222 P0223 P2135	Throttle position sensor	The ECM controls the electric throttle control actuator in regulating the throttle opening in order for the idle position to be within +10 degrees. The ECM regulates the opening speed of the throttle valve to be slower than the normal condition. So, the acceleration will be poor.
P0643	Sensor power supply	ECM stops the electric throttle control actuator control, throttle valve is maintained at a fixed opening (approx. 5 degrees) by the return spring.
P2100 P2103	Throttle control relay	ECM stops the electric throttle control actuator control, throttle valve is maintained at a fixed opening (approx. 5 degrees) by the return spring.
P2101	Electric throttle control function	ECM stops the electric throttle control actuator control, throttle valve is maintained at a fixed opening (approx. 5 degrees) by the return spring.
P2118	Throttle control motor	ECM stops the electric throttle control actuator control, throttle valve is maintained at a fixed opening (approx. 5 degrees) by the return spring.
P2119	Electric throttle control actuator	(When electric throttle control actuator does not function properly due to the return spring malfunction:) ECM controls the electric throttle actuator by regulating the throttle opening around the idle position. The engine speed will not rise more than 2,000 rpm. (When throttle valve opening angle in fail-safe mode is not in specified range:) ECM controls the electric throttle control actuator by regulating the throttle opening to 20 degrees or less. (When ECM detects the throttle valve is stuck open:) While the vehicle is driving, it slows down gradually by fuel cut. After the vehicle stops, the engine stalls. The engine can restart in N or P (CVT), Neutral (M/T) position, and engine speed will not exceed 1,000 rpm or more.
P2122 P2123 P2127 P2128 P2138	Accelerator pedal position sensor	The ECM controls the electric throttle control actuator in regulating the throttle opening in order for the idle position to be within +10 degrees. The ECM regulates the opening speed of the throttle valve to be slower than the normal condition. So, the acceleration will be poor.

- When there is an open circuit on MIL circuit, the ECM cannot warn the driver by lighting up MIL when there is malfunction on engine control system.
  Therefore, when electrical controlled throttle and part of ECM related diagnoses are continuously detected as NG for 5 trips, ECM warns the driver that engine control system malfunctions and MIL circuit is open by means of operating fail-safe function.
  The fail-safe function also operates when above diagnoses except MIL circuit are detected and demands the driver to repair the malfunction.

Engine operating condition in fail-safe mode	Engine speed will not rise more than 2,500 rpm due to the fuel cut

Symptom Matrix Chart

INFOID:0000000005285176

SYSTEM — BASIC ENGINE CONTROL SYSTEM

		SYMPTOM													Reference page
		HARD/NO START/RESTART (EXCP. HA)	ENGINE STALL	HESITATION/SURGING/FLAT SPOT	SPARK KNOCK/DETONATION	LACK OF POWER/POOR ACCELERATION	HIGH IDLE/LOW IDLE	ROUGH IDLE/HUNTING	IDLING VIBRATION	SLOW/NO RETURN TO IDLE	OVERHEATS/WATER TEMPERATURE HIGH	EXCESSIVE FUEL CONSUMPTION	EXCESSIVE OIL CONSUMPTION	BATTERY DEAD (UNDER CHARGE)	
Warranty symptom code		AA	AB	AC	AD	AE	AF	AG	AH	AJ	AK	AL	AM	HA	
Fuel	Fuel pump circuit	1	1	2	3	2		2	2			3		2	EC-1094
	Fuel pressure regulator system	3	3	4	4	4	4	4	4	4		4			EC-656
	Fuel injector circuit	1	1	2	3	2		2	2			2			EC-1089
	Evaporative emission system	3	3	4	4	4	4	4	4	4		4			EC-600
Air	Positive crankcase ventilation system	3	3	4	4	4	4	4	4	4		4	1		EC-613
	Incorrect idle speed adjustment						1	1	1	1		1			EC-648
	Electric throttle control actuator	1	1	2	3	3	2	2	2	2		2		2	EC-1033, EC-1043
Ignition	Incorrect ignition timing adjustment	3	3	1	1	1		1	1			1			EC-648
	Ignition circuit	1	1	2	2	2		2	2			2			EC-1099
Main power supply and ground circuit		2	2	3	3	3		3	3		2	3			EC-707
Mass air flow sensor circuit		1	1	2	2	2		2	2			2			EC-739, EC-747
Engine coolant temperature sensor circuit					3		3			3					EC-759, EC-763, EC-772
Air fuel ratio (A/F) sensor 1 circuit															EC-779, EC-785, EC-791, EC-797, EC-1069
Throttle position sensor circuit							2			2					EC-766, EC-855, EC-1000, EC-1002, EC-1057
Accelerator pedal position sensor circuit				3	2	1									EC-976, EC-1045, EC-1050, EC-1062
Knock sensor circuit				2								3			EC-866
Engine oil temperature sensor circuit				4		2						3			EC-848

	SYMPTOM													Reference page
	HARD/NO START/RESTART (EXCP. HA)	ENGINE STALL	HESITATION/SURGING/FLAT SPOT	SPARK KNOCK/DETONATION	LACK OF POWER/POOR ACCELERATION	HIGH IDLE/LOW IDLE	ROUGH IDLE/HUNTING	IDLING VIBRATION	SLOW/NO RETURN TO IDLE	OVERHEATS/WATER TEMPERATURE HIGH	EXCESSIVE FUEL CONSUMPTION	EXCESSIVE OIL CONSUMPTION	BATTERY DEAD (UNDER CHARGE)	
Warranty symptom code	AA	AB	AC	AD	AE	AF	AG	AH	AJ	AK	AL	AM	HA	
Crankshaft position sensor (POS) circuit	2	2												EC-870
Camshaft position sensor (PHASE) circuit	3	2												EC-876
Vehicle speed signal circuit		2	3		3						3			EC-964
ECM	2	2	3	3	3	3	3	3	3	3	3			EC-973
Intake valve timing control solenoid valve circuit		3	2		1	3	2	2	3		3			EC-734
Park/neutral position (PNP) signal circuit			3		3		3	3			3			EC-981
Refrigerant pressure sensor circuit		2				3			3		4			EC-1108
Electrical load signal circuit							3							EC-1087
Air conditioner circuit	2	2	3	3	3	3	3	3	3		3		2	MTC-27
ABS actuator and electric unit (control unit)			4											BRC-10

1 - 6: The numbers refer to the order of inspection.

(continued on next page)

SYSTEM — ENGINE MECHANICAL & OTHER

		SYMPTOM													Reference page
		HARD/NO START/RESTART (EXCP. HA)	ENGINE STALL	HESITATION/SURGING/FLAT SPOT	SPARK KNOCK/DETONATION	LACK OF POWER/POOR ACCELERATION	HIGH IDLE/LOW IDLE	ROUGH IDLE/HUNTING	IDLING VIBRATION	SLOW/NO RETURN TO IDLE	OVERHEATS/WATER TEMPERATURE HIGH	EXCESSIVE FUEL CONSUMPTION	EXCESSIVE OIL CONSUMPTION	BATTERY DEAD (UNDER CHARGE)	
Warranty symptom code		AA	AB	AC	AD	AE	AF	AG	AH	AJ	AK	AL	AM	HA	
Fuel	Fuel tank	5	5												FL-10
	Fuel piping			5	5	5		5	5			5			EM-36
	Vapor lock														—
	Valve deposit	5		5	5	5		5	5			5			—
	Poor fuel (Heavy weight gasoline, Low octane)														—
Air	Air duct		5	5		5		5	5			5			EM-16
	Air cleaner														EM-16
	Air leakage from air duct (Mass air flow sensor — electric throttle control actuator)	5			5		5			5					EM-16
	Electric throttle control actuator														EM-18
	Air leakage from intake manifold/ Collector/Gasket														EM-18
Cranking	Battery	1	1	1		1		1	1			1		1	SC-5
	Generator circuit														SC-26
	Starter circuit	3													SC-11
	Signal plate	6													EM-75
	Park/neutral position (PNP) switch (M/T) Transmission range switch (CVT)	4													MT-14 or CVT-60
Engine	Cylinder head	5	5	5	5	5		5	5			5			EM-65
	Cylinder head gasket										4		3		
	Cylinder block	6	6	6	6	6		6	6			6	4		EM-80
	Piston														
	Piston ring														
	Connecting rod														
	Bearing														
	Crankshaft														

		SYMPTOM													Reference page
		HARD/NO START/RESTART (EXCP. HA)	ENGINE STALL	HESITATION/SURGING/FLAT SPOT	SPARK KNOCK/DETONATION	LACK OF POWER/POOR ACCELERATION	HIGH IDLE/LOW IDLE	ROUGH IDLE/HUNTING	IDLING VIBRATION	SLOW/NO RETURN TO IDLE	OVERHEATS/WATER TEMPERATURE HIGH	EXCESSIVE FUEL CONSUMPTION	EXCESSIVE OIL CONSUMPTION	BATTERY DEAD (UNDER CHARGE)	
Warranty symptom code		AA	AB	AC	AD	AE	AF	AG	AH	AJ	AK	AL	AM	HA	
Valve mechanism	Timing chain	5	5	5	5	5		5	5			5			EM-40
	Camshaft														EM-50
	Intake valve timing control														EM-40
	Intake valve												3		EM-65
	Exhaust valve														
Exhaust	Exhaust manifold/Tube/Muffler/Gasket	5	5	5	5	5		5	5			5			EM-23, FL-5
	Three way catalyst														
Lubrication	Oil pan/Oil strainer/Oil pump/Oil filter/Oil gallery	5	5	5	5	5		5	5			5			EM-27, LU-9
	Oil level (Low)/Filthy oil														LU-6
Cooling	Radiator/Hose/Radiator filler cap	5	5	5	5	5		5	5		4	5			CO-15
	Thermostat									5					CO-21
	Water control valve														CO-24
	Water pump														CO-19
	Water gallery														CO-24
	Cooling fan									5					CO-17
	Coolant level (Low)/Contaminated coolant														CO-11
NVIS (NISSAN Vehicle Immobilizer System-NATS)		1	1												BL-170

1 - 6: The numbers refer to the order of inspection.

Engine Control Component Parts Location

INFOID:0000000005285177

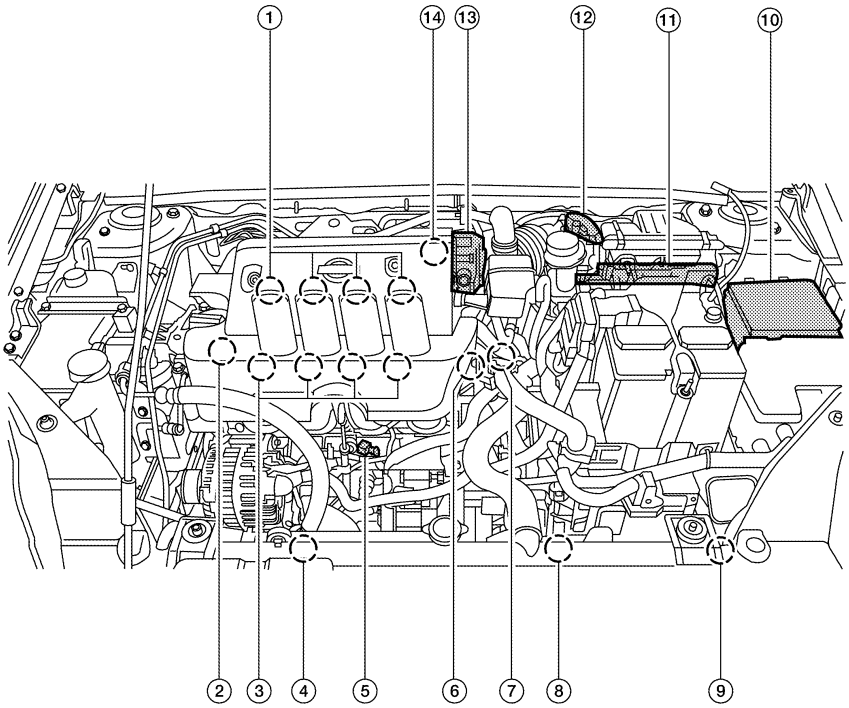

BBIA0922E

1. Ignition coil (with power transistor) and spark plug
2. Intake valve timing control solenoid valve
3. Fuel injector
4. Cooling fan motor-1
5. Knock sensor
6. Camshaft position sensor (PHASE)
7. Engine coolant temperature sensor
8. Cooling fan motor-2
9. Refrigerant pressure sensor
10. IPDM E/R
11. ECM
12. Mass air flow sensor (with intake air temperature sensor)
13. Electric throttle control actuator (with built in throttle position sensor, throttle control motor)
14. EVAP canister purge volume control solenoid valve

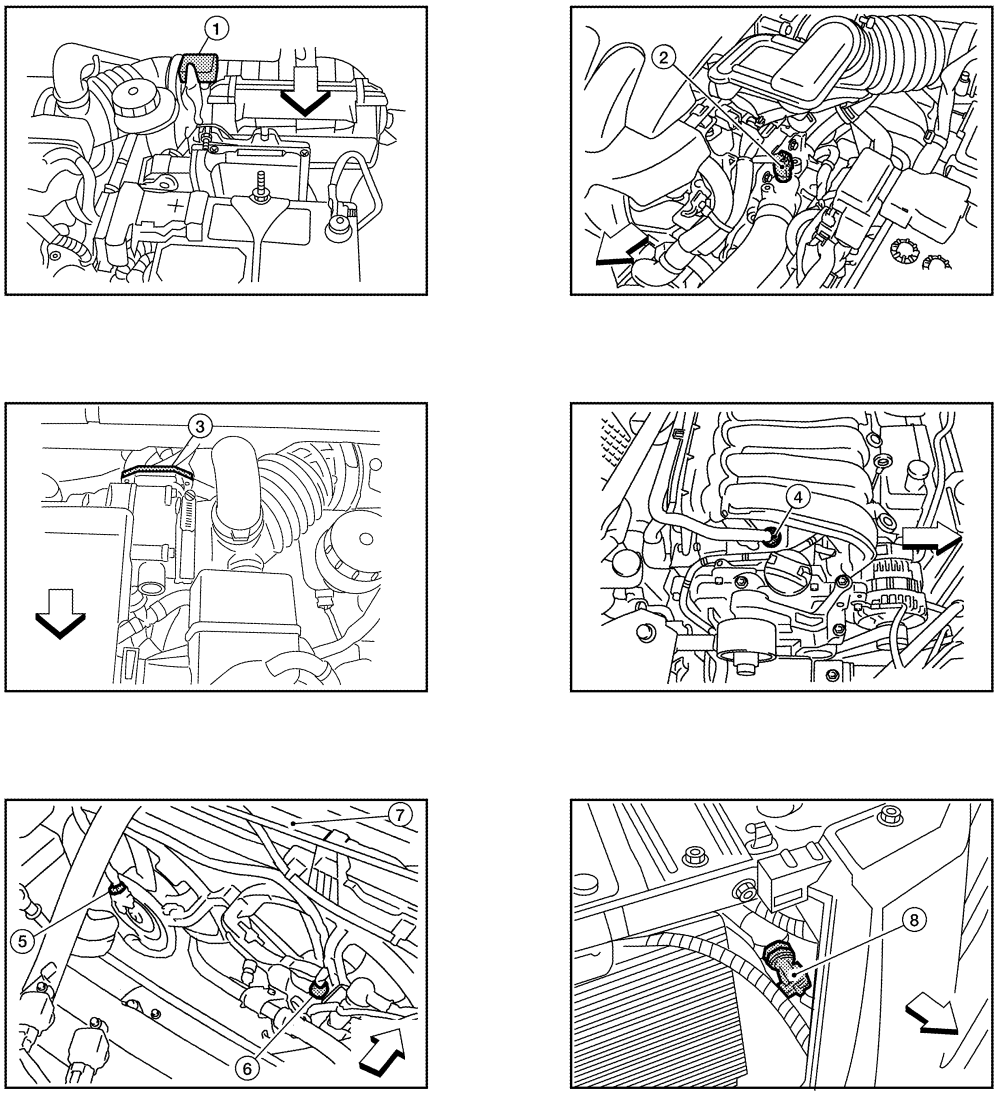

BBIA0756E

⇦ : Vehicle front

1. Mass air flow sensor (with intake air temperature sensor)
2. Engine coolant temperature sensor
3. Electric throttle control actuator (with built in throttle position sensor, throttle control motor)
4. PCV valve
5. Cooling fan motor-1 harness connector
6. Cooling fan motor-2 harness connector
7. Radiator
8. Refrigerant pressure sensor

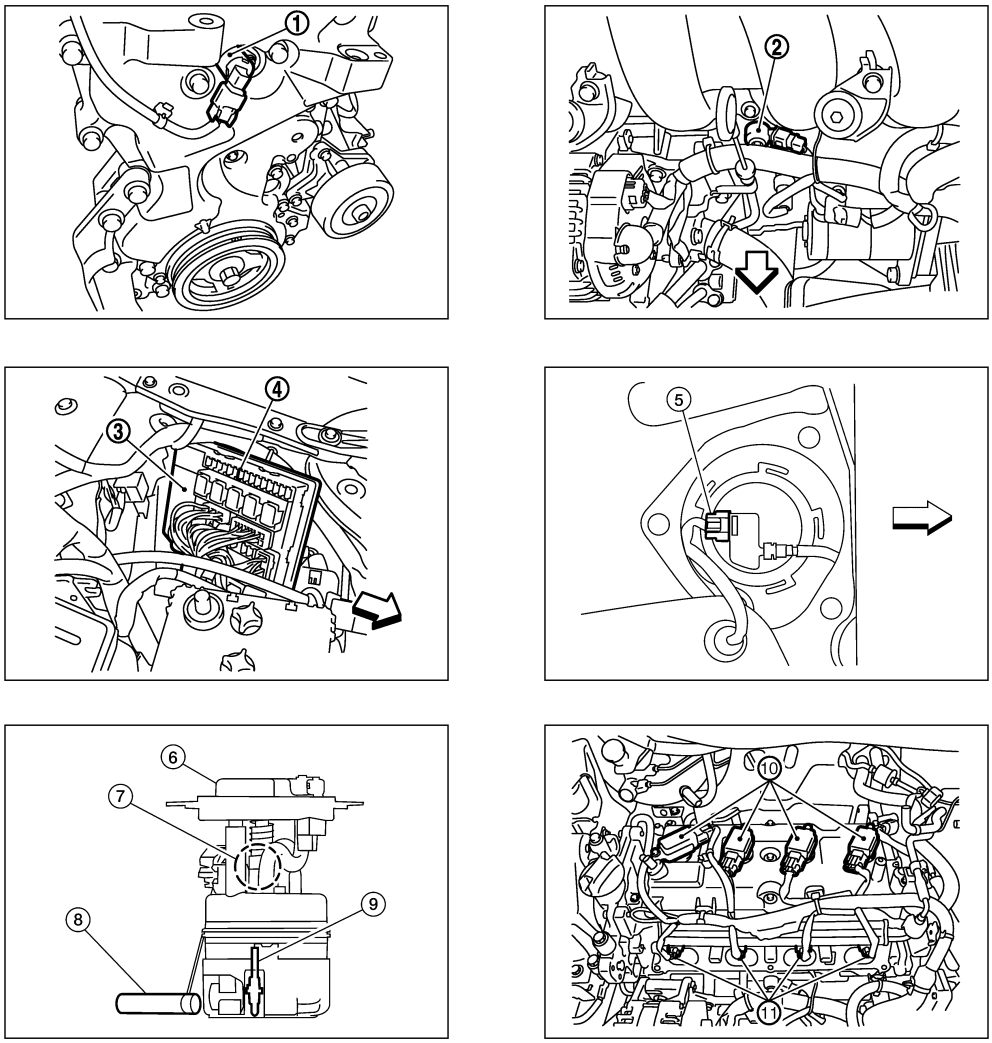

BBIA0725E

⇦ : Vehicle front

1. Intake valve timing control solenoid valve
2. Knock sensor
3. IPDM E/R
4. Fuel pump fuse
5. Fuel level sensor unit and fuel pump harness connector
6. Fuel level sensor unit and fuel pump
7. Fuel pressure regulator
8. Fuel level sensor
9. Fuel tank temperature sensor
10. Ignition coil (with power transistor) and spark plug

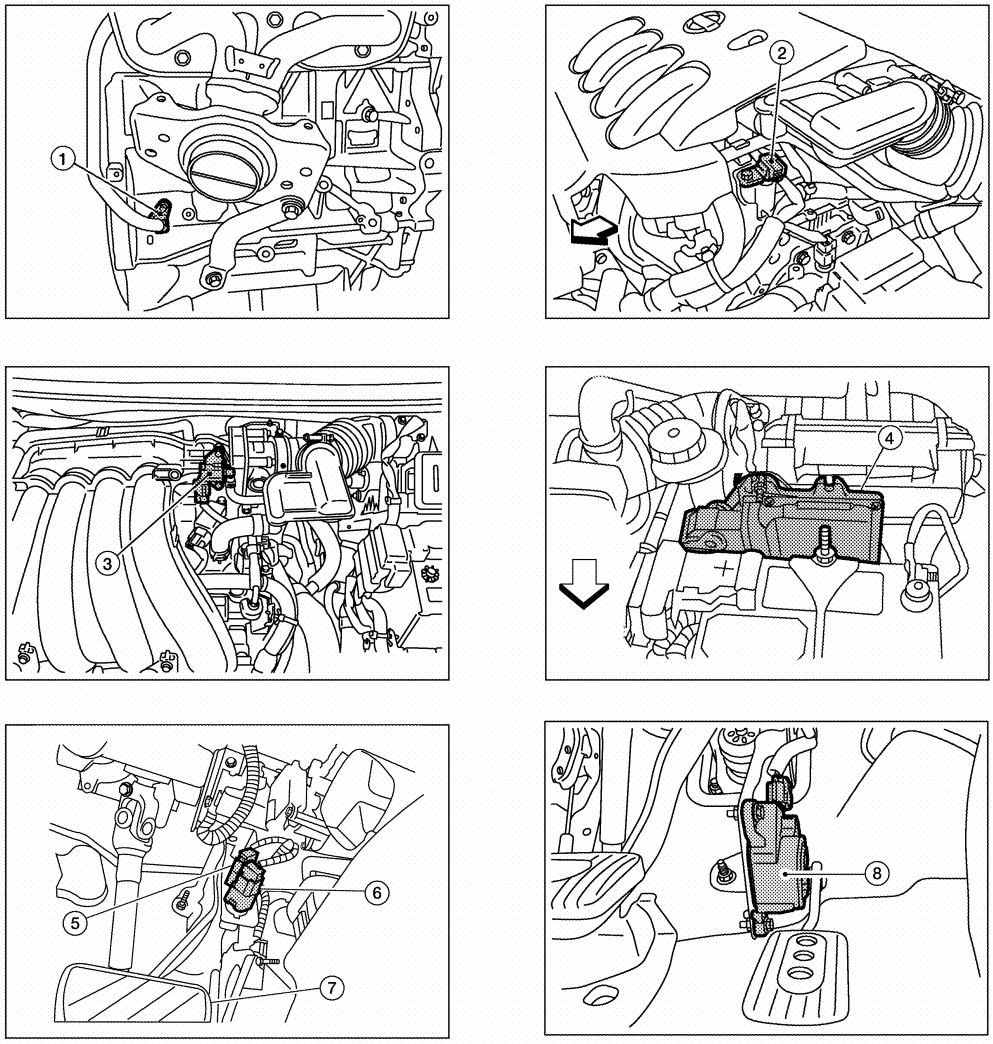

⇦ : Vehicle front

1.	Crankshaft position sensor (POS)	2.	Camshaft position sensor (PHASE)	3.	EVAP canister purge volume control solenoid valve
4.	ECM	5.	Stop lamp switch harness connector	6.	ASCD brake switch harness connector
7.	Brake pedal	8.	Accelerator pedal position sensor		

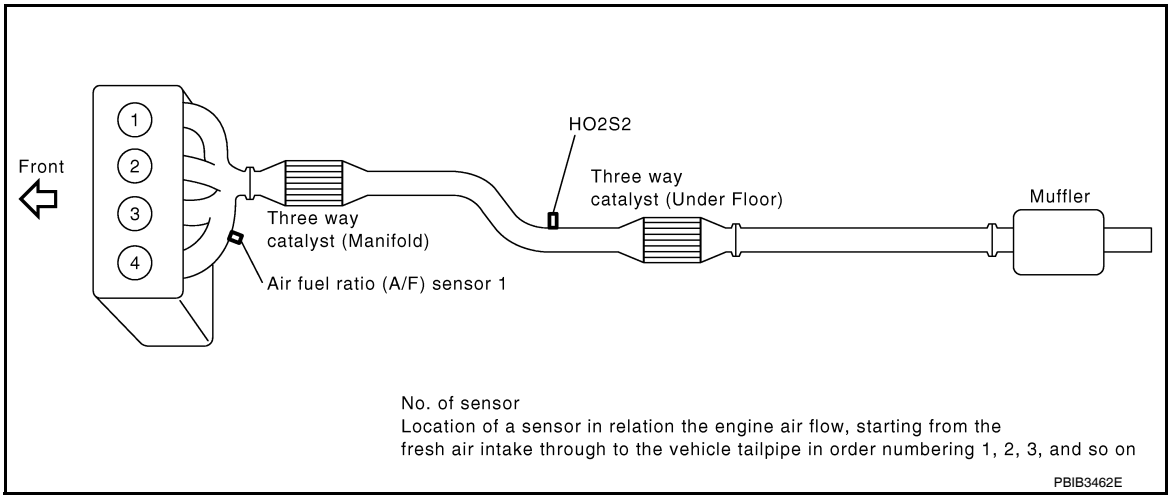

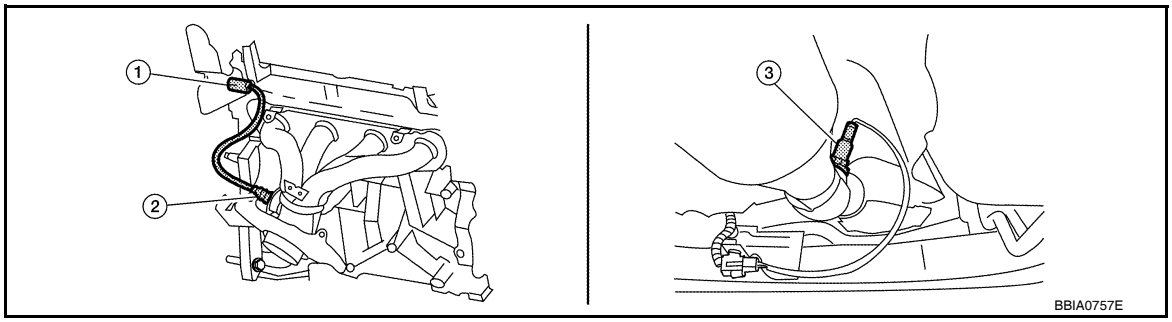

1. Air fuel ratio (A/F) sensor 1 harness connector
2. Air fuel ratio (A/F) sensor 1
3. Heated oxygen sensor 2

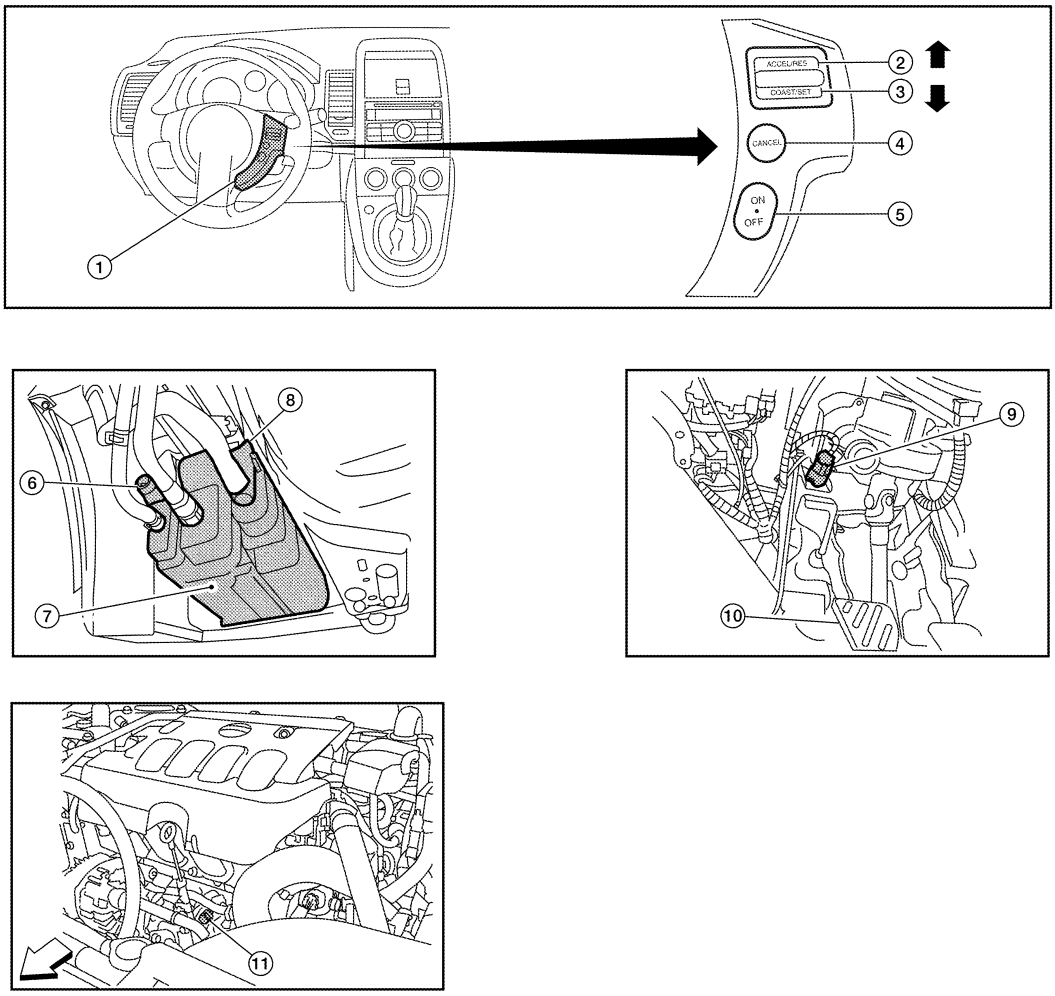

AWBIA0834ZZ

⇦ : Vehicle front

1. ASCD steering switch
2. RESUME/ACCELERATOR switch
3. SET/COAST switch
4. CANCEL switch
5. MAIN switch
6. EVAP control system pressure sensor
7. EVAP canister
8. EVAP canister vent control valve
9. ASCD clutch switch
10. Clutch pedal
11. Engine oil temperature sensor

Vacuum Hose Drawing

INFOID:0000000005285178

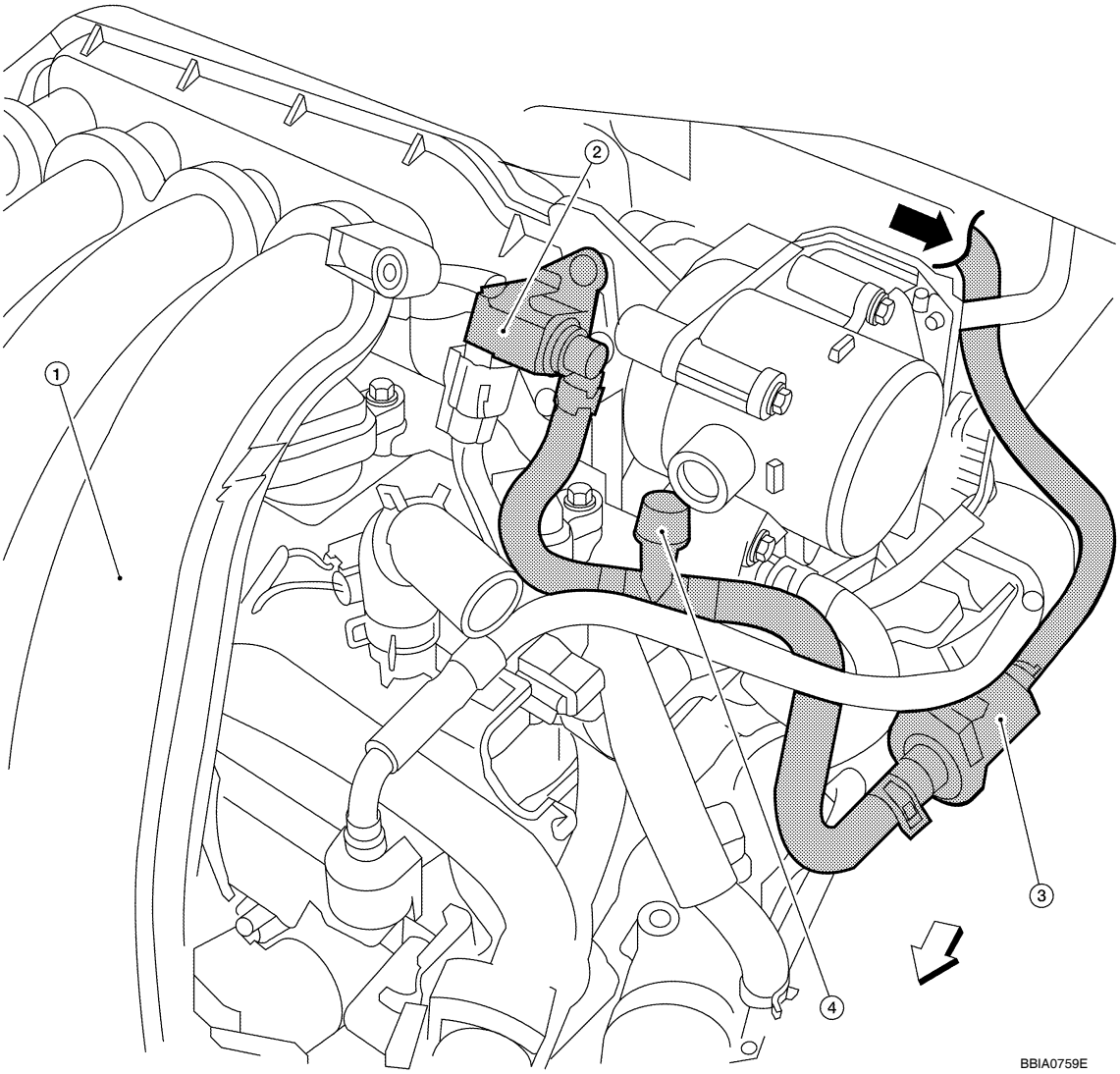

⇦ : Vehicle front

⬅ : From EVAP canister

1. Intake manifold
2. EVAP canister purge volume control solenoid valve
3. EVAP purge resonator
4. EVAP service port

NOTE:
Do not use soapy water or any type of solvent while installing vacuum hoses or purge hoses.

Refer to EC-591, "Schematic" for Vacuum Control System.

Circuit Diagram

INFOID:0000000005285179

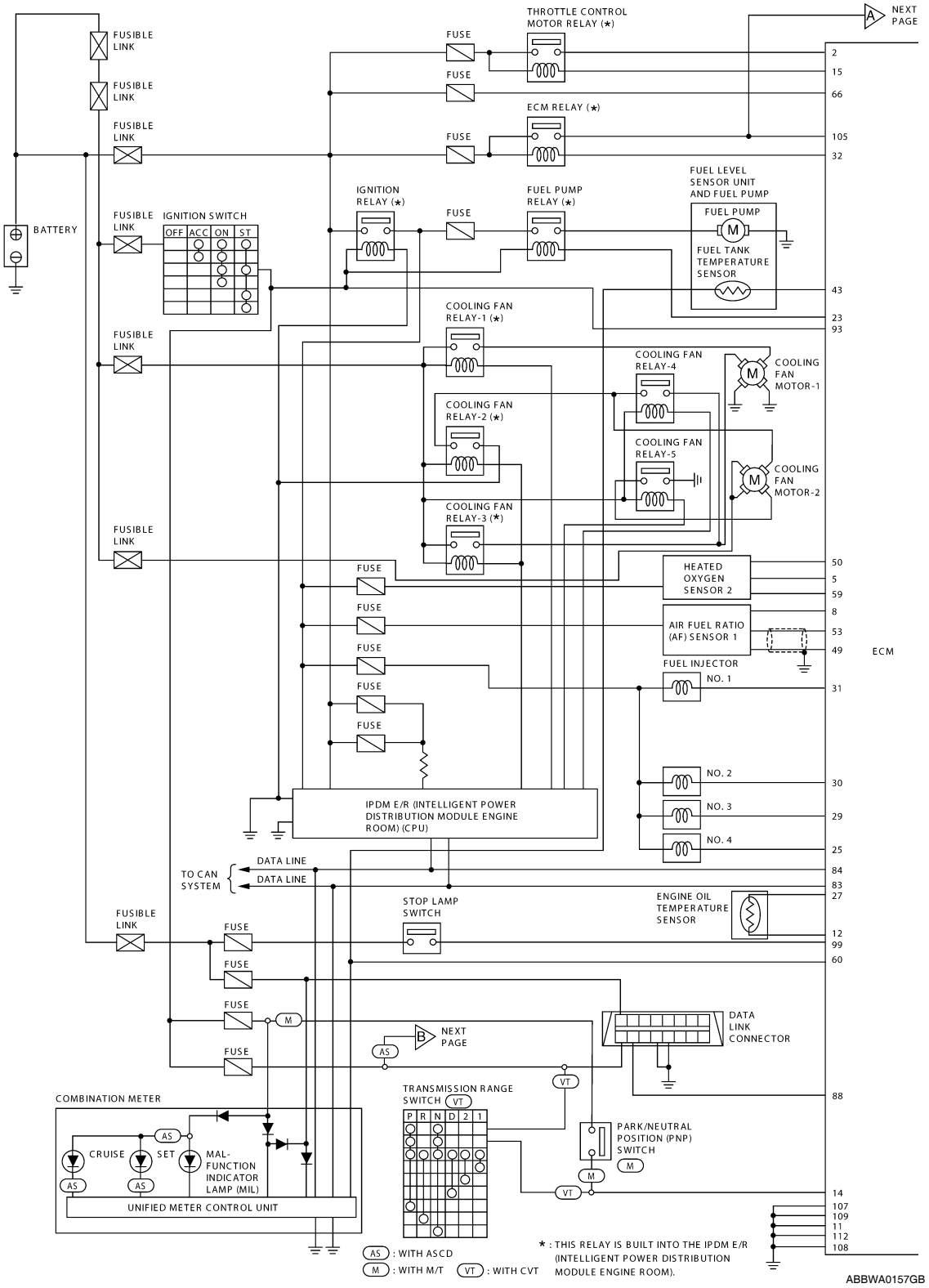

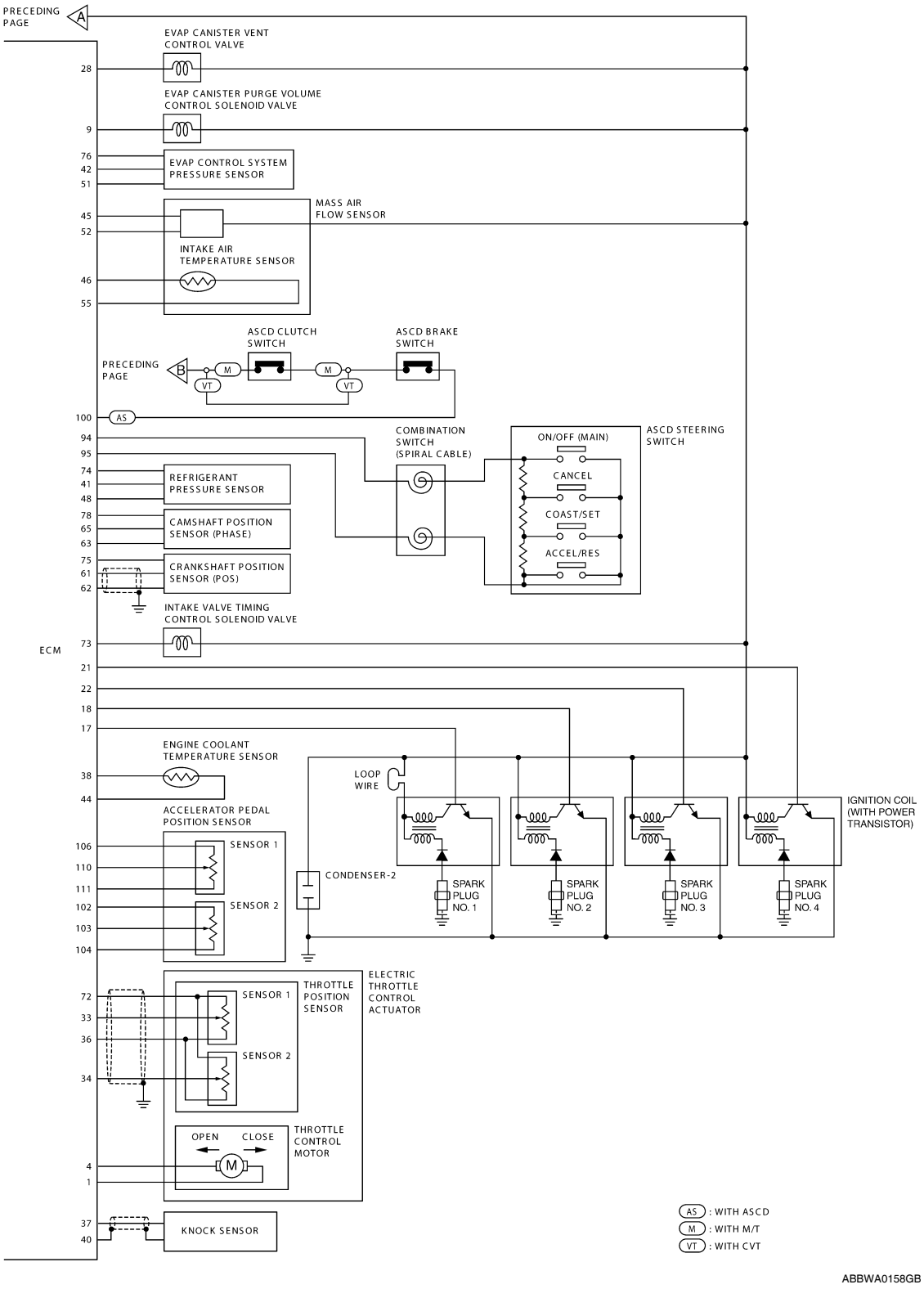
PRECEDING PAGE
A
EVAP CANISTER VENT CONTROL VALVE
28
EVAP CANISTER PURGE VOLUME CONTROL SOLENOID VALVE
9
76
42
51
EVAP CONTROL SYSTEM PRESSURE SENSOR
45
52
MASS AIR FLOW SENSOR
INTAKE AIR TEMPERATURE SENSOR
46
55
ASCD CLUTCH SWITCH
ASCD BRAKE SWITCH
PRECEDING PAGE
B
M
VT
100
AS
94
95
COMBINATION SWITCH (SPIRAL CABLE)
ON/OFF (MAIN)
ASCD STEERING SWITCH
CANCEL
COAST/SET
ACCEL/RES
74
41
48
REFRIGERANT PRESSURE SENSOR
78
65
63
CAMSHAFT POSITION SENSOR (PHASE)
75
61
62
CRANKSHAFT POSITION SENSOR (POS)
INTAKE VALVE TIMING CONTROL SOLENOID VALVE
ECM
73
21
22
18
17
ENGINE COOLANT TEMPERATURE SENSOR
38
44
LOOP WIRE
IGNITION COIL (WITH POWER TRANSISTOR)
ACCELERATOR PEDAL POSITION SENSOR
106
110
111
102
103
104
SENSOR 1
SENSOR 2
CONDENSER-2
SPARK PLUG NO. 1
SPARK PLUG NO. 2
SPARK PLUG NO. 3
SPARK PLUG NO. 4
ELECTRIC THROTTLE CONTROL ACTUATOR
72
33
36
34
THROTTLE POSITION SENSOR
OPEN
CLOSE
THROTTLE CONTROL MOTOR
4
1
37
40
KNOCK SENSOR
AS : WITH ASCD
M : WITH M/T
VT : WITH CVT
ABBWA0158GB

ECM Harness Connector Terminal Layout

INFOID:0000000005285180

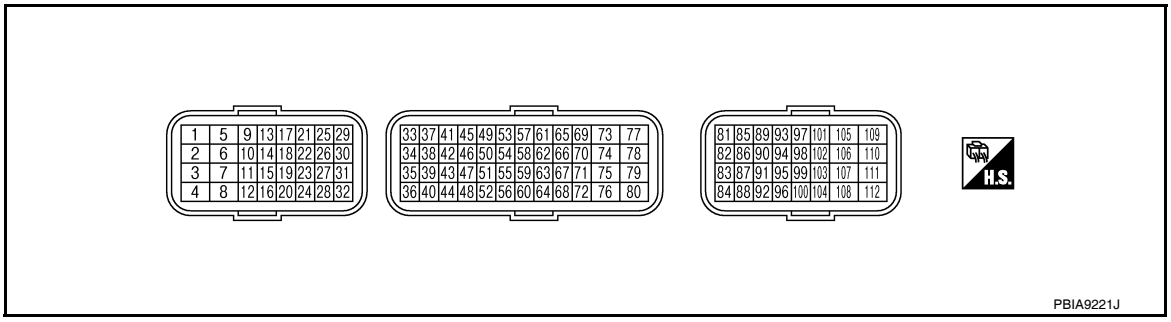

ECM Terminal and Reference Value

INFOID:0000000005285181

PREPARATION

ECM (1) is located in the engine room left side near battery.

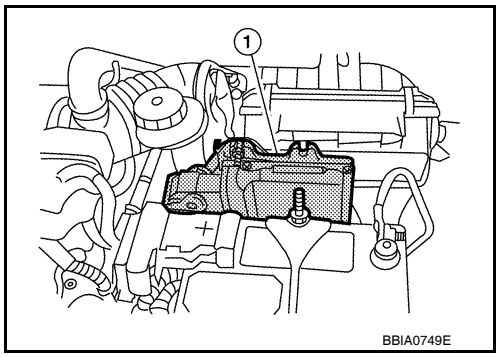

ECM INSPECTION TABLE

Specification data are reference values and are measured between each terminal and ground.
Pulse signal is measured by CONSULT-III.

CAUTION:

Do not use ECM ground terminals when measuring input/output voltage. Doing so may result in damage to the ECMs transistor. Use a ground other than ECM terminals, such as the ground.

TERMINAL NO.	WIRE COLOR	ITEM	CONDITION	DATA (DC Voltage)
1	V	Throttle control motor (Open)	**[Ignition switch: ON]** • Engine stopped • Shift lever: D (CVT), 1st (M/T) • Accelerator pedal: Fully depressed	Approximately 3.2 V★ 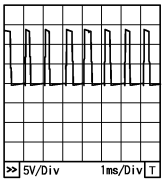 PBIA8150J
2	Y/B	Throttle control motor power supply	**[Ignition switch: ON]**	BATTERY VOLTAGE (11 - 14 V)
3	BR/W	A/F sensor 1 heater	**[Engine is running]** • **Warm-up condition** • Idle speed (More than 140 seconds after starting engine)	Approximately 2.9 - 8.8 V★ 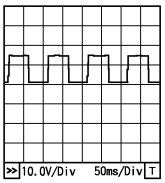 PBIA8148J

TERMINAL NO.	WIRE COLOR	ITEM	CONDITION	DATA (DC Voltage)
4	L/R	Throttle control motor (Close)	**[Ignition switch: ON]** • Engine stopped • Shift lever: D (CVT), 1st (M/T) • Accelerator pedal: Fully released	Approximately 1.8 V★ 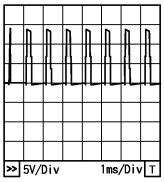 PBIA8149J
5	B/W	Heated oxygen sensor 2 heater	**[Engine is running]** • Engine speed: Below 3,600 rpm after the following conditions are met. - Engine: After warming up - Keeping the engine speed between 3,500 and 4,000 rpm for 1 minute and at idle for 1 minute under no load.	Approximately 10 V★ 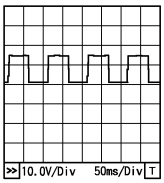 PBIA8148J
			[Ignition switch: ON] • Engine stopped **[Engine is running]** • Engine speed: Above 3,600 rpm.	BATTERY VOLTAGE (11 - 14 V)
9	W/B	EVAP canister purge volume control solenoid valve	**[Engine is running]** • Idle speed • Accelerator pedal: Not depressed even slightly, after engine starting.	BATTERY VOLTAGE (11 - 14 V)★ 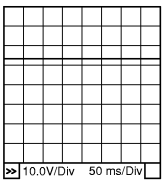 PBIB0050E
			[Engine is running] • Engine speed: About 2,000 rpm (More than 100 seconds after starting engine)	Approximately 10 V★ 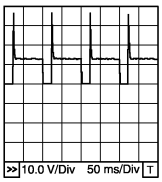 PBIB0520E
10 11	B B	ECM ground	**[Engine is running]** • Idle speed	Body ground
12	GR	Sensor ground (Engine oil temperature sensor)	**[Engine is running]** • **Warm-up condition** • Idle speed	Body ground
15	G/Y	Throttle control motor relay	**[Ignition switch: OFF]**	BATTERY VOLTAGE (11 - 14 V)
			[Ignition switch: ON]	0 - 1.0 V

TERMINAL NO.	WIRE COLOR	ITEM	CONDITION	DATA (DC Voltage)
17 18 21 22	V BR/Y G Y	Ignition signal No. 1 Ignition signal No. 2 Ignition signal No. 4 Ignition signal No. 3	**[Engine is running]** • **Warm-up condition** • Idle speed **NOTE:** The pulse cycle changes depending on rpm at idle.	0 - 0.3 V★ 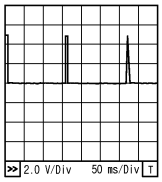 PBIA9265J
			[Engine is running] • **Warm-up condition** • Engine speed: 2,500 rpm.	0.2 - 0.5 V★ 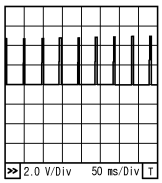 PBIA9266J
23	B/O	Fuel pump relay	**[Ignition switch: ON]** • For 1 second after turning ignition switch ON **[Engine is running]**	0 - 1.0 V
			[Ignition switch: ON] • More than 1 second after turning ignition switch ON	BATTERY VOLTAGE (11 - 14 V)
25 29 30 31	R O GR L	Fuel injector No. 4 Fuel injector No. 3 Fuel injector No. 2 Fuel injector No. 1	**[Engine is running]** • **Warm-up condition** • Idle speed **NOTE:** The pulse cycle changes depending on rpm at idle.	BATTERY VOLTAGE (11 - 14 V)★ 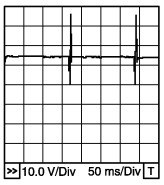 PBIB0529E
			[Engine is running] • **Warm-up condition** • Engine speed: 2,000 rpm	BATTERY VOLTAGE (11 - 14 V)★ 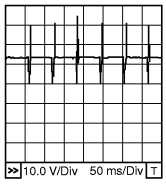 PBIA4943J
27	W	Engine oil temperature sensor	**[Engine is running]**	Approximately 0 - 4.8 V Output voltage varies with engine coolant temperature
28	L/Y	EVAP canister vent control valve	**[Ignition switch: ON]**	BATTERY VOLTAGE (11 - 14 V)
32	R/G	ECM relay (Self shut-off)	**[Engine is running]** **[Ignition switch: OFF]** • For a few seconds after turning ignition switch OFF	0 - 1.0 V
			[Ignition switch: OFF] • More than a few seconds after turning ignition switch OFF	BATTERY VOLTAGE (11 - 14 V)

TERMINAL NO.	WIRE COLOR	ITEM	CONDITION	DATA (DC Voltage)
33	G	Throttle position sensor 1	**[Ignition switch: ON]** • Engine stopped • Shift lever: D (CVT), 1st (M/T) • Accelerator pedal: Fully released	More than 0.36 V
			[Ignition switch: ON] • Engine stopped • Shift lever: D (CVT), 1st (M/T) • Accelerator pedal: Fully depressed	Less than 4.75 V
34	W	Throttle position sensor 2	**[Ignition switch: ON]** • Engine stopped • Shift lever: D (CVT), 1st (M/T) • Accelerator pedal: Fully released	Less than 4.75 V
			[Ignition switch: ON] • Engine stopped • Shift lever: D (CVT), 1st (M/T) • Accelerator pedal: Fully depressed	More than 0.36 V
36	B	Sensor ground (Throttle position sensor)	**[Engine is running]** • **Warm-up condition** • Idle speed	Approximately 0 V
37	W	Knock sensor	**[Engine is running]** • Idle speed	Approximately 2.5 V
38	P	Engine coolant temperature sensor	**[Engine is running]**	Approximately 0 - 4.8 V Output voltage varies with engine coolant temperature.
40	GR	Sensor ground (Knock sensor)	**[Engine is running]** • **Warm-up condition** • Idle speed	Approximately 0 V
41	L	Refrigerant pressure sensor	**[Engine is running]** • **Warm-up condition** • Both A/C switch and blower fan switch: ON (Compressor operates.)	1.0 - 4.0 V
42	R/Y	EVAP control system pressure sensor	**[Ignition switch: ON]**	Approximately 1.8 - 4.8 V
43	G/O	Fuel tank temperature sensor	**[Engine is running]**	Approximately 0 - 4.8 V Output voltage varies with fuel tank temperature
44	GR	Sensor ground (Engine coolant temperature sensor)	**[Engine is running]** • **Warm-up condition** • Idle speed	Approximately 0 V
45	V	Mass air flow sensor	**[Engine is running]** • **Warm-up condition** • Idle speed	0.9 - 1.2 V
			[Engine is running] • **Warm-up condition** • Engine speed: 2,500 rpm	1.5 - 1.8 V
46	BR/Y	Intake air temperature sensor	**[Engine is running]**	Approximately 0 - 4.8 V Output voltage varies with intake air temperature.
48	R/G	Sensor ground (Refrigerant pressure sensor)	**[Engine is running]** • **Warm-up condition** • Idle speed	Approximately 0 V
49	L/R	A/F sensor 1	**[Engine is running]** • **Warm-up condition** • Engine speed: 2,000 rpm	Approximately 1.8 V Output voltage varies with air fuel ratio.

TERMINAL NO.	WIRE COLOR	ITEM	CONDITION	DATA (DC Voltage)
50	G	Heated oxygen sensor 2	**[Engine is running]** • Revving engine from idle to 3,000 rpm quickly after the following conditions are met. - Engine: After warming up - Keeping the engine speed between 3,500 and 4,000 rpm for 1 minute and at idle for 1 minute under no load.	0 - Approximately 1.0 V
51	V/R	Sensor ground (EVAP control system pressure sensor)	**[Engine is running]** • **Warm-up condition** • Idle speed	Approximately 0 V
52	B/W	Sensor ground (Mass air flow sensor)	**[Engine is running]** • **Warm-up condition** • Idle speed	Approximately 0 V
53	L/G	A/F sensor 1	**[Ignition switch: ON]**	Approximately 2.2 V
55	O	Sensor ground (Intake air temperature sensor)	**[Engine is running]** • **Warm-up condition** • Idle speed	Approximately 0 V
59	B/Y	Sensor ground (Heated oxygen sensor 2)	**[Engine is running]** • **Warm-up condition** • Idle speed	Approximately 0 V
60	B	Sensor ground (Fuel tank temperature sensor)	**[Engine is running]** • **Warm-up condition** • Idle speed	Approximately 0 V
61	W	Crankshaft position sensor (POS)	**[Engine is running]** • **Warm-up condition** • Idle speed **NOTE:** The pulse cycle changes depending on rpm at idle.	Approximately 4.0 V★ 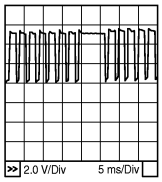 PBIB2998E
			[Engine is running] • Engine speed: 2,000 rpm	Approximately 4.0 V★ 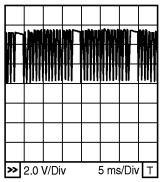 PBIB2999E
62	R	Sensor ground [Crankshaft position sensor (POS)]	**[Engine is running]** • **Warm-up condition** • Idle speed	Approximately 0 V
63	B/R	Sensor ground [Camshaft position sensor (PHASE)]	**[Engine is running]** • **Warm-up condition** • Idle speed	Approximately 0 V

TERMINAL NO.	WIRE COLOR	ITEM	CONDITION	DATA (DC Voltage)
65	R	Camshaft position sensor (PHASE)	**[Engine is running]** • **Warm-up condition** • Idle speed **NOTE:** The pulse cycle changes depending on rpm at idle.	1.0 - 2.0 V★ 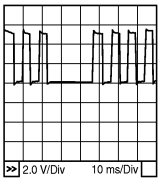 PBIB2986E
			[Engine is running] • Engine speed: 2,000 rpm.	1.0 - 2.0 V★ 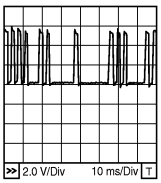 PBIB2987E
66	Y/R	Power supply for ECM (Buck-up)	**[Ignition switch: OFF]**	BATTERY VOLTAGE (11 - 14 V)
69	BR/R	PNP signal	**[Ignition switch: ON]** • Shift lever: P or N (CVT), Neutral (M/T)	BATTERY VOLTAGE (11 - 14 V)
			[Ignition switch: ON] • Except above	Approximately 0 V
72	R	Sensor power supply (Throttle position sensor)	**[Ignition switch: ON]**	Approximately 5 V
73	Y/R	Intake valve timing control solenoid valve	**[Engine is running]** • **Warm-up condition** • Idle speed	BATTERY VOLTAGE (11 - 14 V)
			[Engine is running] • **Warm-up condition** • When revving engine up to 2,000 rpm quickly	7 - 10 V★ 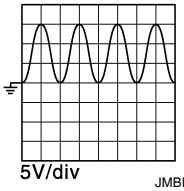 JMBIA1638GB
74	G/W	Sensor power supply (Refrigerant pressure sensor)	**[Ignition switch: ON]**	Approximately 5 V
75	Y	Sensor power supply [Crankshaft position sensor (POS)]	**[Ignition switch: ON]**	Approximately 5 V
76	V/W	EVAP control system pressure sensor power supply	**[Ignition switch: ON]**	Approximately 5 V
78	G/Y	Sensor power supply [Camshaft position sensor (PHASE)]	**[Ignition switch: ON]**	Approximately 5 V
83	P	CAN communication line	—	—
84	L	CAN communication line	—	—
88	P/L	DATA link connector	—	—
93	B/R	Ignition switch	**[Ignition switch: OFF]**	0 V
			[Ignition switch: ON]	BATTERY VOLTAGE (11 - 14 V)

TERMINAL NO.	WIRE COLOR	ITEM	CONDITION	DATA (DC Voltage)
94	L/Y	ASCD steering switch	**[Ignition switch: ON]** • ASCD steering switch: OFF	Approximately 4 V
			[Ignition switch: ON] • MAIN switch: Pressed	Approximately 0 V
			[Ignition switch: ON] • CANCEL switch: Pressed	Approximately 1 V
			[Ignition switch: ON] • RESUME/ACCELERATE switch: Pressed	Approximately 3 V
			[Ignition switch: ON] • SET/COAST switch: Pressed	Approximately 2 V
95	B/Y	Sensor ground (ASCD steering switch)	**[Engine is running]** • **Warm-up condition** • Idle speed	Approximately 0 V
99	R/G	Stop lamp switch	**[Ignition switch: OFF]** • Brake pedal: Fully released	Approximately 0 V
			[Ignition switch: OFF] • Brake pedal: Slightly depressed	BATTERY VOLTAGE (11 - 14 V)
100	G/B	ASCD brake switch	**[Ignition switch: ON]** • Brake pedal: Slightly depressed (CVT) • Brake pedal and/or clutch pedal: Slightly depressed (M/T)	Approximately 0 V
			[Ignition switch: ON] • Brake pedal: Fully released (CVT) • Brake pedal and clutch pedal: Fully released (M/T)	BATTERY VOLTAGE (11 - 14 V)
102	BR/Y	Sensor power supply (Accelerator pedal position sensor 2)	**[Ignition switch: ON]**	Approximately 5 V
103	Y/G	Accelerator pedal position sensor 2	**[Ignition switch: ON]** • Engine stopped • Accelerator pedal: Fully released	0.3 - 0.6 V
			[Ignition switch: ON] • Engine stopped • Accelerator pedal: Fully depressed	1.95 - 2.4 V
104	B/P	Sensor ground (Accelerator pedal position sensor 2)	**[Engine is running]** • **Warm-up condition** • Idle speed	Approximately 0 V
105	G	Power supply for ECM	**[Ignition switch: ON]**	BATTERY VOLTAGE (11 - 14 V)
106	O	Sensor power supply (Accelerator pedal position sensor 1)	**[Ignition switch: ON]**	Approximately 5 V
107 108 109	B B B	ECM ground	**[Engine is running]** • Idle speed	Body ground
110	W	Accelerator pedal position sensor 1	**[Ignition switch: ON]** • Engine stopped • Accelerator pedal: Fully released	0.6 - 0.9 V
			[Ignition switch: ON] • Engine stopped • Accelerator pedal: Fully depressed	3.9 - 4.7 V

TERMINAL NO.	WIRE COLOR	ITEM	CONDITION	DATA (DC Voltage)
111	B/W	Sensor ground (Accelerator pedal position sensor 1)	**[Engine is running]** • **Warm-up condition** • Idle speed	Approximately 0 V
112	B	ECM ground	**[Engine is running]** • Idle speed	Body ground

★: Average voltage for pulse signal (Actual pulse signal can be confirmed by oscilloscope.)

CONSULT-III Function (ENGINE)

INFOID:0000000005285182

FUNCTION

Diagnostic test mode	Function
Work support	This mode enables a technician to adjust some devices faster and more accurately by following the indications on the CONSULT-III unit.
Self Diagnostic result	Self-diagnostic results such as 1st trip DTC, DTCs and 1st trip freeze frame data or freeze frame data can be read and erased quickly.*
Data Monitor	Input/Output data in the ECM can be read.
Active Test	Diagnostic Test Mode in which CONSULT-III drives some actuators apart from the ECMs and also shifts some parameters in a specified range.
Function Test	This mode is used to inform customers when their vehicle condition requires periodic maintenance.
DTC & SRT Confirmation	The status of system monitoring tests and the self-diagnosis status/result can be confirmed.
Ecu Identification	ECM part number can be read.

*: The following emission-related diagnostic information is cleared when the ECM memory is erased.

- Diagnostic trouble codes
- 1st trip diagnostic trouble codes
- Freeze frame data
- 1st trip freeze frame data
- System readiness test (SRT) codes
- Test values

INSPECTION PROCEDURE

Refer to "CONSULT-III Software Operation Manual" for more information.

WORK SUPPORT MODE

Work Item

Work Item	Condition	Usage
FUEL PRESSURE RELEASE	• FUEL PUMP WILL STOP BY TOUCHING “START” DURING IDLING. CRANK A FEW TIMES AFTER ENGINE STALLS.	When releasing fuel pressure from fuel line
IDLE AIR VOL LEARN	• THE IDLE AIR VOLUME THAT KEEPS THE ENGINE WITHIN THE SPECIFIED RANGE IS MEMORIZED IN ECM.	When learning the idle air volume
SELF-LEARNING CONT	• THE COEFFICIENT OF SELF-LEARNING CONTROL MIXTURE RATIO RETURNS TO THE ORIGINAL COEFFICIENT.	When clearing the coefficient of self-learning control value

Work Item	Condition	Usage
EVAP SYSTEM CLOSE	CLOSE THE EVAP CANISTER VENT CONTROL VALVE IN ORDER TO MAKE EVAP SYSTEM CLOSE UNDER THE FOLLOWING CONDITIONS. • IGN SW “ON” • ENGINE NOT RUNNING • AMBIENT TEMPERATURE IS ABOVE 0°C (32°F). • NO VACUUM AND NO HIGH PRESSURE IN EVAP SYSTEM • FUEL TANK TEMP. IS MORE THAN 0°C (32°F). • WITHIN 10 MINUTES AFTER STARTING “EVAP SYSTEM CLOSE” • WHEN TRYING TO EXECUTE “EVAP SYSTEM CLOSE” UNDER THE CONDITION EXCEPT ABOVE, CONSULT-III WILL DISCONTINUE IT AND DISPLAY APPROPRIATE INSTRUCTION. **NOTE:** **WHEN STARTING ENGINE, CONSULT-III MAY DISPLAY “BATTERY VOLTAGE IS LOW. CHARGE BATTERY”, EVEN IN USING CHARGED BATTERY.**	When detecting EVAP vapor leak point of EVAP system
TARGET IDLE RPM ADJ*	• IDLE CONDITION	When setting target idle speed
TARGET IGN TIM ADJ*	• IDLE CONDITION	When adjusting target ignition timing
VIN REGISTRATION	• IN THIS MODE, VIN IS REGISTERED IN ECM.	When registering VIN in ECM

*: This function is not necessary in the usual service procedure.

SELF-DIAG RESULTS MODE

Self Diagnostic Item

Regarding items of DTC and 1st trip DTC, refer to EC-617, "Emission-related Diagnostic Information".

Freeze Frame Data and 1st Trip Freeze Frame Data

Freeze frame data item*	Description
DIAG TROUBLE CODE	• The engine control component part/control system has a trouble code, it is displayed as DTC.
FUEL SYS-B1	• “Fuel injection system status” at the moment a malfunction is detected is displayed. • One mode in the following is displayed. Mode2: Open loop due to detected system malfunction Mode3: Open loop due to driving conditions (power enrichment, deceleration enleanment) Mode4: Closed loop - using oxygen sensor(s) as feedback for fuel control Mode5: Open loop - has not yet satisfied condition to go to closed loop
CAL/LD VALUE [%]	• The calculated load value at the moment a malfunction is detected is displayed.
COOLANT TEMP [°C] or [°F]	• The engine coolant temperature at the moment a malfunction is detected is displayed.
L-FUEL TRM-B1 [%]	• “Long-term fuel trim” at the moment a malfunction is detected is displayed. • The long-term fuel trim indicates much more gradual feedback compensation to the base fuel schedule than short-term fuel trim.
S-FUEL TRM-B1 [%]	• “Short-term fuel trim” at the moment a malfunction is detected is displayed. • The short-term fuel trim indicates dynamic or instantaneous feedback compensation to the base fuel schedule.
ENGINE SPEED [rpm]	• The engine speed at the moment a malfunction is detected is displayed.
VEHICL SPEED [km/h] or [mph]	• The vehicle speed at the moment a malfunction is detected is displayed.
ABSOL TH-P/S [%]	• The throttle valve opening angle at the moment a malfunction is detected is displayed.
B/FUEL SCHDL [msec]	• The base fuel schedule at the moment a malfunction is detected is displayed.
INT/A TEMP SE [°C] or [°F]	• The intake air temperature at the moment a malfunction is detected is displayed.

Freeze frame data item*	Description
FUEL SYS-B2	• These items are displayed but are not applicable to this model.
L-FUEL TRM-B2 [%]	
S-FUEL TRM-B2 [%]	
INT MANI PRES [kPa]	
COMBUST CONDITION	

*: The items are the same as those of 1st trip freeze frame data.

DATA MONITOR MODE

Monitored Item

Monitored item [Unit]	Description	Remarks
ENG SPEED [rpm]	• Indicates the engine speed computed from the signals of the crankshaft position sensor (POS) and camshaft position sensor (PHASE).	• Accuracy becomes poor if engine speed drops below the idle rpm. • If the signal is interrupted while the engine is running, an abnormal value may be indicated.
MAS A/F SE-B1 [V]	• The signal voltage of the mass air flow sensor is displayed.	• When the engine is stopped, a certain value is indicated. • When engine is running specification range is indicated in “SPEC”.
B/FUEL SCHDL [ms]	• “Base fuel schedule” indicates the fuel injection pulse width programmed into ECM, prior to any learned on board correction.	• When engine is running specification range is indicated in “SPEC”.
A/F ALPHA-B1 [%]	• The mean value of the air-fuel ratio feedback correction factor per cycle is indicated.	• When the engine is stopped, a certain value is indicated. • When engine is running specification range is indicated in “SPEC”. • This data also includes the data for the air/fuel ratio learning control.
COOLAN TEMP/S [°C] or [°F]	• The engine coolant temperature (determined by the signal voltage of the engine coolant temperature sensor) is displayed.	• When the engine coolant temperature sensor is open or short-circuited, ECM enters fail-safe mode. The engine coolant temperature determined by the ECM is displayed.
A/F SEN1 (B1) [V]	• The A/F signal computed from the input signal of the A/F sensor 1 is displayed.	
HO2S2 (B1) [V]	• The signal voltage of the heated oxygen sensor 2 is displayed.	
HO2S2 MNTR (B1) [RICH/LEAN]	• Display of heated oxygen sensor 2 signal: RICH: means the amount of oxygen after three way catalyst is relatively small. LEAN: means the amount of oxygen after three way catalyst is relatively large.	• When the engine is stopped, a certain value is indicated.
VHCL SPEED SE [km/h] or [mph]	• The vehicle speed computed from the vehicle speed signal is displayed.	
BATTERY VOLT [V]	• The power supply voltage of ECM is displayed.	
ACCEL SEN 1 [V]	• The accelerator pedal position sensor signal voltage is displayed.	• ACCEL SEN 2 signal is converted by ECM internally. Thus, it differs from ECM terminal voltage signal.
ACCEL SEN 2 [V]		
TP SEN 1-B1 [V]	• The throttle position sensor signal voltage is displayed.	• TP SEN 2-B1 signal is converted by ECM internally. Thus, it differs from ECM terminal voltage signal.
TP SEN 2-B1 [V]		
FUEL T/TMP SE [°C] or [°F]	• The fuel temperature (determined by the signal voltage of the fuel tank temperature sensor) is displayed.	

Monitored item [Unit]	Description	Remarks
INT/A TEMP SE [°C] or [°F]	• The intake air temperature (determined by the signal voltage of the intake air temperature sensor) is indicated.	
EVAP SYS PRES [V]	• The signal voltage of EVAP control system pressure sensor is displayed.	
FUEL LEVEL SE [V]	• The signal voltage of the fuel level sensor is displayed.	
START SIGNAL [ON/OFF]	• Indicates start signal status [ON/OFF] computed by the ECM according to the signals of engine speed and battery voltage.	• After starting the engine, [OFF] is displayed regardless of the starter signal.
CLSD THL POS [ON/OFF]	• Indicates idle position [ON/OFF] computed by the ECM according to the accelerator pedal position sensor signal.	
AIR COND SIG [ON/OFF]	• Indicates [ON/OFF] condition of the air conditioner switch as determined by the air conditioner signal.	
P/N POSI SW [ON/OFF]	• Indicates [ON/OFF] condition from the park/neutral position (PNP) signal.	
PW/ST SIGNAL [ON/OFF]	• [ON/OFF] condition of the power steering system (determined by the signal sent from EPS control unit) is indicated.	
LOAD SIGNAL [ON/OFF]	• Indicates [ON/OFF] condition from the electrical load signal. ON: Rear window defogger switch is ON and/or lighting switch is in 2nd position. OFF: Both rear window defogger switch and lighting switch are OFF.	
IGNITION SW [ON/OFF]	• Indicates [ON/OFF] condition from ignition switch.	
HEATER FAN SW [ON/OFF]	• Indicates [ON/OFF] condition from the heater fan switch signal.	
BRAKE SW [ON/OFF]	• Indicates [ON/OFF] condition from the stop lamp switch signal.	
INJ PULSE-B1 [msec]	• Indicates the actual fuel injection pulse width compensated by ECM according to the input signals.	• When the engine is stopped, a certain computed value is indicated.
IGN TIMING [BTDC]	• Indicates the ignition timing computed by ECM according to the input signals.	• When the engine is stopped, a certain value is indicated.
CAL/LD VALUE [%]	• “Calculated load value” indicates the value of the current airflow divided by peak airflow.	
MASS AIRFLOW [g·m/s]	• Indicates the mass airflow computed by ECM according to the signal voltage of the mass air flow sensor.	
PURG VOL C/V [%]	• Indicates the EVAP canister purge volume control solenoid valve control value computed by the ECM according to the input signals. • The opening becomes larger as the value increases.	
INT/V TIM (B1) [°CA]	• Indicates [°CA] of intake camshaft advanced angle.	
INT/V SOL (B1) [%]	• The control value of the intake valve timing control solenoid valve (determined by ECM according to the input signal) is indicated. • The advance angle becomes larger as the value increases	
AIR COND RLY [ON/OFF]	• The air conditioner relay control condition (determined by ECM according to the input signals) is indicated.	
FUEL PUMP RLY [ON/OFF]	• Indicates the fuel pump relay control condition determined by ECM according to the input signals.	

Monitored item [Unit]	Description	Remarks
VENT CONT/V [ON/OFF]	• The control condition of the EVAP canister vent control valve (determined by ECM according to the input signals) is indicated. ON: Closed OFF: Open	
THRTL RELAY [ON/OFF]	• Indicates the throttle control motor relay control condition determined by the ECM according to the input signals.	
COOLING FAN [HI/MID/LOW/OFF]	• Indicates the condition of the cooling fan (determined by ECM according to the input signals). HI: High speed operation MID: Middle speed operation LOW: Low speed operation OFF: Stop	
HO2S2 HTR (B1) [ON/OFF]	• Indicates [ON/OFF] condition of heated oxygen sensor 2 heater determined by ECM according to the input signals.	
I/P PULLY SPD [rpm]	• Indicates the engine speed computed from the input speed sensor signal.	
VEHICLE SPEED [km/h] or [mph]	• The vehicle speed computed from the vehicle speed signal sent from TCM is displayed.	
IDL A/V LEARN [YET/CMPLT]	• Display the condition of idle air volume learning YET: Idle Air Volume Learning has not been performed yet. CMPLT: Idle Air Volume Learning has already been performed successfully.	
TRVL AFTER MIL [km] or [mile]	• Distance traveled while MIL is activated.	
A/F S1 HTR (B1) [%]	• Indicates A/F sensor 1 heater control value computed by ECM according to the input signals. • The current flow to the heater becomes larger as the value increases.	
AC PRESS SEN [V]	• The signal voltage from the refrigerant pressure sensor is displayed.	
VHCL SPEED SE [km/h] or [mph]	• The vehicle speed computed from the vehicle speed signal sent from TCM is displayed.	
SET VHCL SPD [km/h] or [mph]	• The preset vehicle speed is displayed.	
MAIN SW [ON/OFF]	• Indicates [ON/OFF] condition from MAIN switch signal.	
CANCEL SW [ON/OFF]	• Indicates [ON/OFF] condition from CANCEL switch signal.	
RESUME/ACC SW [ON/OFF]	• Indicates [ON/OFF] condition from RESUME/ACCELERATE switch signal.	
SET SW [ON/OFF]	• Indicates [ON/OFF] condition from SET/COAST switch signal.	
BRAKE SW1 [ON/OFF]	• Indicates [ON/OFF] condition from ASCD brake switch signal.	
BRAKE SW2 [ON/OFF]	• Indicates [ON/OFF] condition of stop lamp switch signal.	
VHCL SPD CUT [NON/CUT]	• Indicates the vehicle cruise condition. NON: Vehicle speed is maintained at the ASCD set speed. CUT: Vehicle speed increased to excessively high compared with the ASCD set speed, and ASCD operation is cut off.	

Monitored item [Unit]	Description	Remarks
LO SPEED CUT [NON/CUT]	• Indicates the vehicle cruise condition. NON: Vehicle speed is maintained at the ASCD set speed. CUT: Vehicle speed decreased to excessively low compared with the ASCD set speed, and ASCD operation is cut off.	
AT OD MONITOR [ON/OFF]	• Indicates [ON/OFF] condition of CVT according to the input signal from the TCM.	• For M/T models always “OFF” is displayed
AT OD CANCEL [ON/OFF]	• Indicates [ON/OFF] condition of CVT cancel signal sent from the TCM.	• For M/T models always “OFF” is displayed
CRUISE LAMP [ON/OFF]	• Indicates [ON/OFF] condition of CRUISE lamp determined by the ECM according to the input signals.	
SET LAMP [ON/OFF]	• Indicates [ON/OFF] condition of SET lamp determined by the ECM according to the input signals.	
A/F ADJ-B1	• Indicates the correction factor stored in ECM. The factor is calculated from the difference between the target air/fuel ratio stored in ECM and the air/fuel ratio calculated from air fuel ratio (A/F) sensor 1 signal.	
ENG OIL TEMP [°C] or [°F]	• The engine oil temperature (determined by the signal voltage of the engine oil temperature sensor) is displayed.	
HO2 S2 DIAG1 (B1) [INCMP/CMPLT]	• Indicates DTC P0139 self-diagnosis (delayed response) condition. INCMP: Self-diagnosis is incomplete. CMPLT: Self-diagnosis is complete.	
HO2 S2 DIAG2 (B1) [INCMP/CMPLT]	• Indicates DTC P0139 self-diagnosis (slow response) condition. INCMP: Self-diagnosis is incomplete. CMPLT: Self-diagnosis is complete.	

NOTE:

Any monitored item that does not match the vehicle being diagnosed is deleted from the display automatically.

ACTIVE TEST MODE

Test Item

Test Item	Condition	Judgment	Check Item (Remedy)
FUEL INJECTION	• Engine: Return to the original trouble condition • Change the amount of fuel injection using CONSULT-III.	If trouble symptom disappears, see CHECK ITEM.	• Harness and connectors • Fuel injector • Air fuel ratio (A/F) sensor 1
IGNITION TIMING	• Engine: Return to the original trouble condition • Timing light: Set • Retard the ignition timing using CONSULT-III.	If trouble symptom disappears, see CHECK ITEM.	• Perform Idle Air Volume Learning.
POWER BALANCE	• Engine: After warming up, idle the engine. • A/C switch OFF • Shift lever: P or N (CVT), Neutral (M/T) • Cut off each fuel injector signal one at a time using CONSULT-III.	Engine runs rough or dies.	• Harness and connectors • Compression • Fuel injector • Power transistor • Spark plug • Ignition coil
COOLING FAN*	• Ignition switch: ON • Turn the cooling fan “LOW”, “MID”, “HI” and “OFF” with CONSULT-III.	Cooling fan moves and stops.	• Harness and connectors • Cooling fan relay • Cooling fan motor

Test Item	Condition	Judgment	Check Item (Remedy)
ENG COOLANT TEMP	• Engine: Return to the original trouble condition • Change the engine coolant temperature using CONSULT-III.	If trouble symptom disappears, see CHECK ITEM.	• Harness and connectors • Engine coolant temperature sensor • Fuel injector
FUEL PUMP RELAY	• Ignition switch: ON (Engine stopped) • Turn the fuel pump relay “ON” and “OFF” using CONSULT-III and listen to operating sound.	Fuel pump relay makes the operating sound.	• Harness and connectors • Fuel pump relay
PURG VOL CONT/V	• Engine: After warming up, run engine at 1,500 rpm. • Change the EVAP canister purge volume control solenoid valve opening percent using CONSULT-III.	Engine speed changes according to the opening percent.	• Harness and connectors • EVAP canister purge volume control solenoid valve
FUEL/T TEMP SEN	• Change the fuel tank temperature using CONSULT-III.		
VENT CONTROL/V	• Ignition switch: ON (Engine stopped) • Turn solenoid valve “ON” and “OFF” with the CONSULT-III and listen to operating sound.	Solenoid valve makes an operating sound.	• Harness and connectors • EVAP canister vent control valve
V/T ASSIGN ANGLE	• Engine: Return to the original trouble condition • Change intake valve timing using CONSULT-III.	If trouble symptom disappears, see CHECK ITEM.	• Harness and connectors • Intake valve timing control solenoid valve

*: Leaving cooling fan OFF with CONSULT-III while engine is running may cause the engine to overheat.

DTC & SRT CONFIRMATION MODE

SRT STATUS Mode
For details, refer to EC-617, "Emission-related Diagnostic Information".

PERMANENT DTC STATUS Mode
For details, refer to EC-617, "Emission-related Diagnostic Information".
NOTE:
This mode is not used in regions that permanent DTCs are not regulated by law.

SRT WORK SUPPORT Mode
This mode enables a technician to drive a vehicle to set the SRT while monitoring the SRT status.

PERMANENT DTC WORK SUPPORT Mode
This mode enables a technician to drive a vehicle to complete the driving pattern that is reguired for erasing permanent DTC.
NOTE:
This mode is not used in regions that permanent DTCs are not regulated by law.

DTC WORK SUPPORT Mode

Test mode	Test item	Corresponding DTC No.	Reference page
EVAPORATIVE SYSTEM	PURG FLOW P0441	P0441	EC-887
	EVP SML LEAK P0442/P1442*	P0442	EC-892
		P0455	EC-943
	EVP V/S LEAK P0456/P1456*	P0456	EC-950
	PURG VOL CN/V P1444	P0443	EC-899
A/F SEN1	A/F SEN1 (B1) P1276	P0130	EC-779
	A/F SEN1 (B1) P1278/P1279	P0133	EC-797

Test mode	Test item	Corresponding DTC No.	Reference page
HO2S2	HO2S2 (B1) P0139	P0139	EC-820
	HO2S2 (B1) P1146	P0138	EC-811
	HO2S2 (B1) P1147	P0137	EC-804

*: DTC P1442 and P1456 does not apply to B16 models but appears in DTC Work Support Mode screens.

Generic Scan Tool (GST) Function

INFOID:0000000005285183

DESCRIPTION

Generic Scan Tool (OBDII scan tool) complying with SAE J1978/ISO 15031-4 has 8 different functions explained below.
ISO15765-4 is used as the protocol.
The name GST or Generic Scan Tool is used in this service manual.

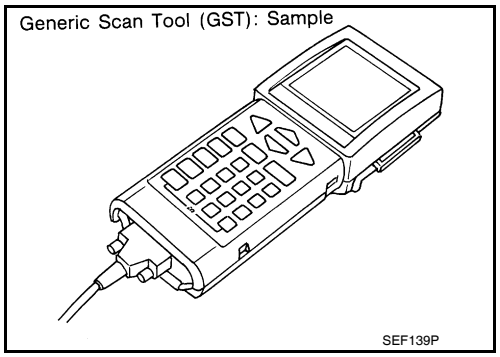

FUNCTION

Diagnostic test mode		Function
Service $01	READINESS TESTS	This diagnostic service gains access to current emission-related data values, including analog inputs and outputs, digital inputs and outputs, and system status information.
Service $02	(FREEZE DATA)	This diagnostic service gains access to emission-related data value which were stored by ECM during the freeze frame. For details, refer to EC-686, "CONSULT-III Function (ENGINE)".
Service $03	DTCs	This diagnostic service gains access to emission-related power train trouble codes which were stored by ECM.
Service $04	CLEAR DIAG INFO	This diagnostic service can clear all emission-related diagnostic information. This includes: • Clear number of diagnostic trouble codes (Service $01) • Clear diagnostic trouble codes (Service $03) • Clear trouble code for freeze frame data (Service $01) • Clear freeze frame data (Service $02) • Reset status of system monitoring test (Service $01) • Clear on board monitoring test results (Service $06 and $07)
Service $06	(ON BOARD TESTS)	This diagnostic service accesses the results of on board diagnostic monitoring tests of specific components/systems that are not continuously monitored.
Service $07	(ON BOARD TESTS)	This diagnostic service enables the off board test drive to obtain test results for emission-related powertrain components/systems that are continuously monitored during normal driving conditions.
Service $08	—	This diagnostic service can close EVAP system in ignition switch ON position (Engine stopped). When this diagnostic service is performed, EVAP canister vent control valve can be closed. In the following conditions, this diagnostic service cannot function. • Low ambient temperature • Low battery voltage • Engine running • Ignition switch OFF • Low fuel temperature • Too much pressure is applied to EVAP system
Service $09	(CALIBRATION ID)	This diagnostic service enables the off-board test device to request specific vehicle information such as Vehicle Identification Number (VIN) and Calibration IDs.
Service $0A*	PERMANENT DTCs	This diagnostic service gains access to permanent DTCs which were stored by ECM.

NOTE:

*: Service $0A is not applied for regions where it is not mandated.

INSPECTION PROCEDURE

1. Turn ignition switch OFF.
2. Connect GST to data link connector (1).
   - Accelerator pedal (2)

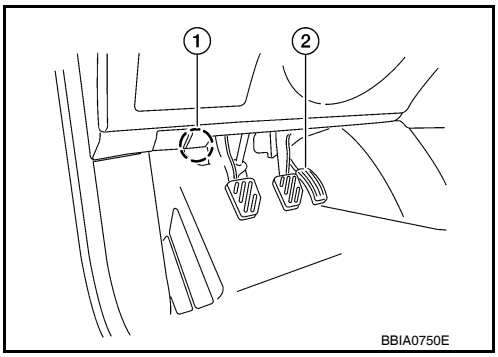

3. Turn ignition switch ON.
4. Enter the program according to instruction on the screen or in the operation manual.
   (*: Regarding GST screens in this section, sample screens are shown.)

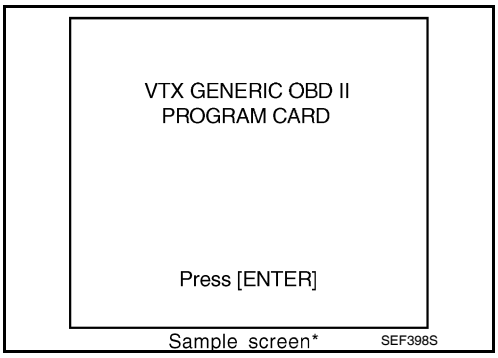

5. Perform each diagnostic service according to each service procedure.
   For further information, see the GST Operation Manual of the tool maker.

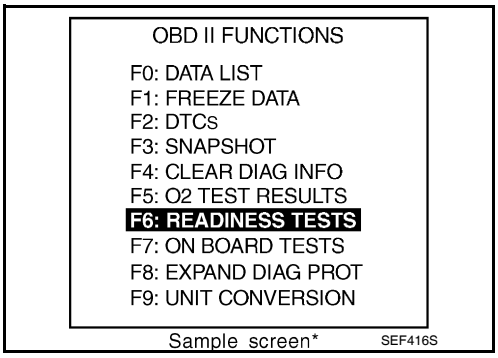

CONSULT-III Reference Value in Data Monitor

INFOID:0000000005285184

Remarks:
- Specification data are reference values.
- Specification data are output/input values which are detected or supplied by the ECM at the connector.
  * Specification data may not be directly related to their components signals/values/operations.
  i.e. Adjust ignition timing with a timing light before monitoring IGN TIMING, because the monitor may show the specification data in spite of the ignition timing not being adjusted to the specification data. This IGN TIMING monitors the data calculated by the ECM according to the signals input from the camshaft position sensor and other ignition timing related sensors.

Monitor Item	Condition	Specification
ENG SPEED	• Run engine and compare CONSULT-III value with the tachometer indication.	Almost the same speed as the tachometer indication.
MAS A/F SE-B1	See EC-698.	
B/FUEL SCHDL	See EC-698.	
A/F ALPHA-B1	See EC-698.	
COOLAN TEMP/S	• Engine: After warming up	More than 70°C (158°F)

Monitor Item	Condition		Specification
A/F SEN1 (B1)	• Engine: After warming up	Maintaining engine speed at 2,000 rpm	Fluctuates around 2.2 V
HO2S2 (B1)	• Revving engine from idle to 3,000 rpm quickly after the following conditions are met - Engine: After warming up - Keeping the engine speed between 3,500 and 4,000 rpm for 1 minute and at idle for 1 minute under no load		0 - 0.3 V ←→ Approx. 0.6 - 1.0 V
HO2S2 MNTR (B1)			LEAN ←→ RICH
VHCL SPEED SE	• Turn drive wheels and compare CONSULT-III value with the speedometer indication.		Almost the same speed as the speedometer indication.
BATTERY VOLT	• Ignition switch: ON (Engine stopped)		11 - 14 V
ACCEL SEN 1 ACCEL SEN 2*	• Ignition switch: ON (Engine stopped)	Accelerator pedal: Fully released	0.6 - 0.9 V
		Accelerator pedal: Fully depressed	4.0 - 4.8 V
EVAP SYS PRES	• Ignition switch: ON		Approx. 1.8 - 4.8 V
TP SEN 1-B1 TP SEN 2-B1*	• Ignition switch: ON (Engine stopped)	Accelerator pedal: Fully released	More than 0.36 V
	• Shift lever: D (CVT), 1st (M/T)	Accelerator pedal: Fully depressed	Less than 4.75 V
START SIGNAL	• Ignition switch: ON → START → ON		OFF → ON → OFF
CLSD THL POS	• Ignition switch: ON	Accelerator pedal: Fully released	ON
		Accelerator pedal: Slightly depressed	OFF
AIR COND SIG	• Engine: After warming up, idle the engine	Air conditioner switch: OFF	OFF
		Air conditioner switch: ON (Compressor operates.)	ON
P/N POSI SW	• Ignition switch: ON	Shift lever: P or N (CVT), Neutral (M/T)	ON
		Shift lever: Except above	OFF
PW/ST SIGNAL	• Engine: After warming up, idle the engine	Steering wheel: Not being turned	OFF
		Steering wheel: Being turned	ON
LOAD SIGNAL	• Ignition switch: ON	Rear window defogger switch: ON and/or Lighting switch: 2nd	ON
		Rear window defogger switch and lighting switch: OFF	OFF
IGNITION SW	• Ignition switch: ON → OFF → ON		ON → OFF → ON
HEATER FAN SW	• Ignition switch: ON	Heater fan: Operating	ON
		Heater fan: Not operating	OFF
BRAKE SW	• Ignition switch: ON	Brake pedal: Fully released	OFF
		Brake pedal: Slightly depressed	ON
INJ PULSE-B1	• Engine: After warming up • Air conditioner switch: OFF • Shift lever: P or N (CVT), Neutral (M/T) • No load	Idle	2.0 - 3.0 msec
		2,000 rpm	1.9 - 2.9 msec
IGN TIMING	• Engine: After warming up • Air conditioner switch: OFF • Shift lever: P or N (CVT), Neutral (M/T) • No load	Idle	1° - 11° BTDC
		2,000 rpm	25° - 45° BTDC
CAL/LD VALUE	• Engine: After warming up • Air conditioner switch: OFF • Shift lever: P or N (CVT), Neutral (M/T) • No load	Idle	10% - 35%
		2,500 rpm	10% - 35%

Monitor Item	Condition		Specification
MASS AIRFLOW	• Engine: After warming up • Air conditioner switch: OFF • Shift lever: P or N (CVT), Neutral (M/T) • No load	Idle	1.0 - 4.0 g·m/s
		2,500 rpm	2.0 - 10.0 g·m/s
PURG VOL C/V	• Engine: After warming up • Air conditioner switch: OFF • Shift lever: P or N (CVT), Neutral (M/T) • No load	Idle (Accelerator pedal is not depressed even slightly, after engine starting)	0%
		2,000 rpm	0 - 50%
INT/V TIM (B1)	• Engine: After warming up • Air conditioner switch: OFF • Shift lever: P or N (CVT), Neutral (M/T) • No load	Idle	–5° - 5°CA
		When revving engine up to 2,000 rpm quickly	Approx. 0° - 40°CA
INT/V SOL (B1)	• Engine: After warming up • Air conditioner switch: OFF • Shift lever: P or N (CVT), Neutral (M/T) • No load	Idle	0% - 2%
		When revving engine up to 2,000 rpm quickly	Approx. 0% - 90%
AIR COND RLY	• Engine: After warming up, idle the engine	Air conditioner switch: OFF	OFF
		Air conditioner switch: ON (Compressor operates)	ON
FUEL PUMP RLY	• For 1 second after turning ignition switch ON • Engine running or cranking		ON
	• Except above conditions		OFF
VENT CONT/V	• Ignition switch: ON		OFF
THRTL RELAY	• Ignition switch: ON		ON
COOLING FAN	• Engine: After warming up, idle the engine • Air conditioner switch: OFF	Engine coolant temperature: 97°C (207°F) or less	OFF
		Engine coolant temperature: Between 98°C (208°F) and 99°C (210°F)	LOW
		Engine coolant temperature: Between 100°C (212°F) and 104°C (219°F)	MIDDLE
		Engine coolant temperature: 105°C (221°F) or more	HIGH
HO2S2 HTR (B1)	• Below 3,600 rpm after the following conditions are met. - Engine: After warming up - Keeping the engine speed between 3,500 and 4,000 rpm for 1 minute and at idle for 1 minute under no load		ON
	• Engine speed: Above 3,600 rpm		OFF
I/P PULLY SPD	• Vehicle speed: More than 20 km/h (12 MPH)		Almost the same speed as the tachometer indication
VEHICLE SPEED	• Turn drive wheels and compare CONSULT-III value with the speedometer indication.		Almost the same speed as the speedometer indication
TRVL AFTER MIL	• Ignition switch: ON	Vehicle has traveled after MIL has turned ON.	0 - 65,535 km (0 - 40,723 mile)
A/F S1 HTR (B1)	• Engine: After warming up, idle the engine (More than 140 seconds after starting engine)		4 - 100%
AC PRESS SEN	• Engine: Idle • Air conditioner switch: ON (Compressor operates)		1.0 - 4.0 V
VHCL SPEED SE	• Turn drive wheels and compare speedometer indication with the CONSULT-III value.		Almost the same speed as the speedometer indication

Monitor Item	Condition		Specification
SET VHCL SPD	• Engine: Running	ASCD: Operating	The preset vehicle speed is displayed.
MAIN SW	• Ignition switch: ON	MAIN switch: Pressed	ON
		MAIN switch: Released	OFF
CANCEL SW	• Ignition switch: ON	CANCEL switch: Pressed	ON
		CANCEL switch: Released	OFF
RESUME/ACC SW	• Ignition switch: ON	RESUME/ACCELERATE switch: Pressed	ON
		RESUME/ACCELERATE switch: Released	OFF
SET SW	• Ignition switch: ON	SET/COAST switch: Pressed	ON
		SET/COAST switch: Released	OFF
BRAKE SW1	• Ignition switch: ON	• Brake pedal: Fully released (CVT) • Brake pedal and clutch pedal: Fully released (M/T)	ON
		• Brake pedal: Slightly depressed (CVT) • Brake pedal and/or clutch pedal: Slightly depressed (M/T)	OFF
BRAKE SW2	• Ignition switch: ON	Brake pedal: Fully released	OFF
		Brake pedal: Slightly depressed	ON
CRUISE LAMP	• Ignition switch: ON	MAIN switch: Pressed at the 1st time → at the 2nd time	ON → OFF
SET LAMP	• MAIN switch: ON • Vehicle speed: Between 40 km/h (25 MPH) and 144 km/h (89 MPH)	ACSD: Operating	ON
		ASCD: Not operating	OFF
A/F ADJ-B1	• Engine: Running		−0.330 – 0.330
ENG OIL TEMP	• Engine: After warming up		More than 70°C (158°F)
HO2 S2 DIAG1 (B1)	DTC P0139 self-diagnosis (delayed response) is incomplete.		INCMP
	DTC P0139 self-diagnosis (delayed response) is complete.		CMPLT
HO2 S2 DIAG2 (B1)	DTC P0139 self-diagnosis (slow response) is incomplete.		INCMP
	DTC P0139 self-diagnosis (slow response) is complete.		CMPLT

*: Accelerator pedal position sensor 2 signal and throttle position sensor 2 signal are converted by ECM internally. Thus, they differ from ECM terminals voltage signal.

TROUBLE DIAGNOSIS - SPECIFICATION VALUE

Description

INFOID:0000000005285185

The specification (SP) value indicates the tolerance of the value that is displayed in “SPEC” of “DATA MONITOR” mode with CONSULT-III during normal operation of the Engine Control System. When the value in “SPEC” of “DATA MONITOR” mode is within the SP value, the Engine Control System is confirmed OK. When the value in “SPEC” of “DATA MONITOR” mode is NOT within the SP value, the Engine Control System may have one or more malfunctions.
The SP value is used to detect malfunctions that may affect the Engine Control System, but will not light the MIL.
The SP value will be displayed for the following three items:
- B/FUEL SCHDL (The fuel injection pulse width programmed into ECM prior to any learned on board correction)
- A/F ALPHA-B1 (The mean value of air-fuel ratio feedback correctionfactor per cycle)
- MAS A/F SE-B1 (The signal voltage of the mass air flow sensor)

Testing Condition

INFOID:0000000005285186

- Vehicle driven distance: More than 5,000 km (3,107 miles)
- Barometric pressure: 98.3 - 104.3 kPa (1.003 - 1.064 kg/cm^2, 14.25 - 15.12 psi)
- Atmospheric temperature: 20 - 30°C (68 - 86°F)
- Engine coolant temperature: 75 - 95°C (167 - 203°F)
- Transmission: Warmed-up
  - CVT models: After the engine is warmed up to normal operating temperature, drive vehicle until “ATF TEMP SEN” (fluid temperature sensor signal) indicates less than 0.9 V.
  - M/T models: After the engine is warmed up to normal operating temperature, drive vehicle for 5 minutes.
- Electrical load: Not applied
  - Rear window defogger switch, air conditioner switch, lighting switch are OFF. Steering wheel is straight ahead.
- Engine speed: Idle

Inspection Procedure

INFOID:0000000005285187

NOTE:
Perform “SPEC” in “DATA MONITOR” mode in maximum scale display.

1. Perform EC-648, "Basic Inspection".
2. Confirm that the testing conditions indicated above are met.
3. Select “B/FUEL SCHDL”, “A/F ALPHA-B1” and “MAS A/F SE-B1” in “SPEC” of “DATA MONITOR” mode with CONSULT-III.
4. Make sure that monitor items are within the SP value.
5. If NG, go to EC-698, "Diagnosis Procedure".

Diagnosis Procedure

INFOID:0000000005285188

OVERALL SEQUENCE

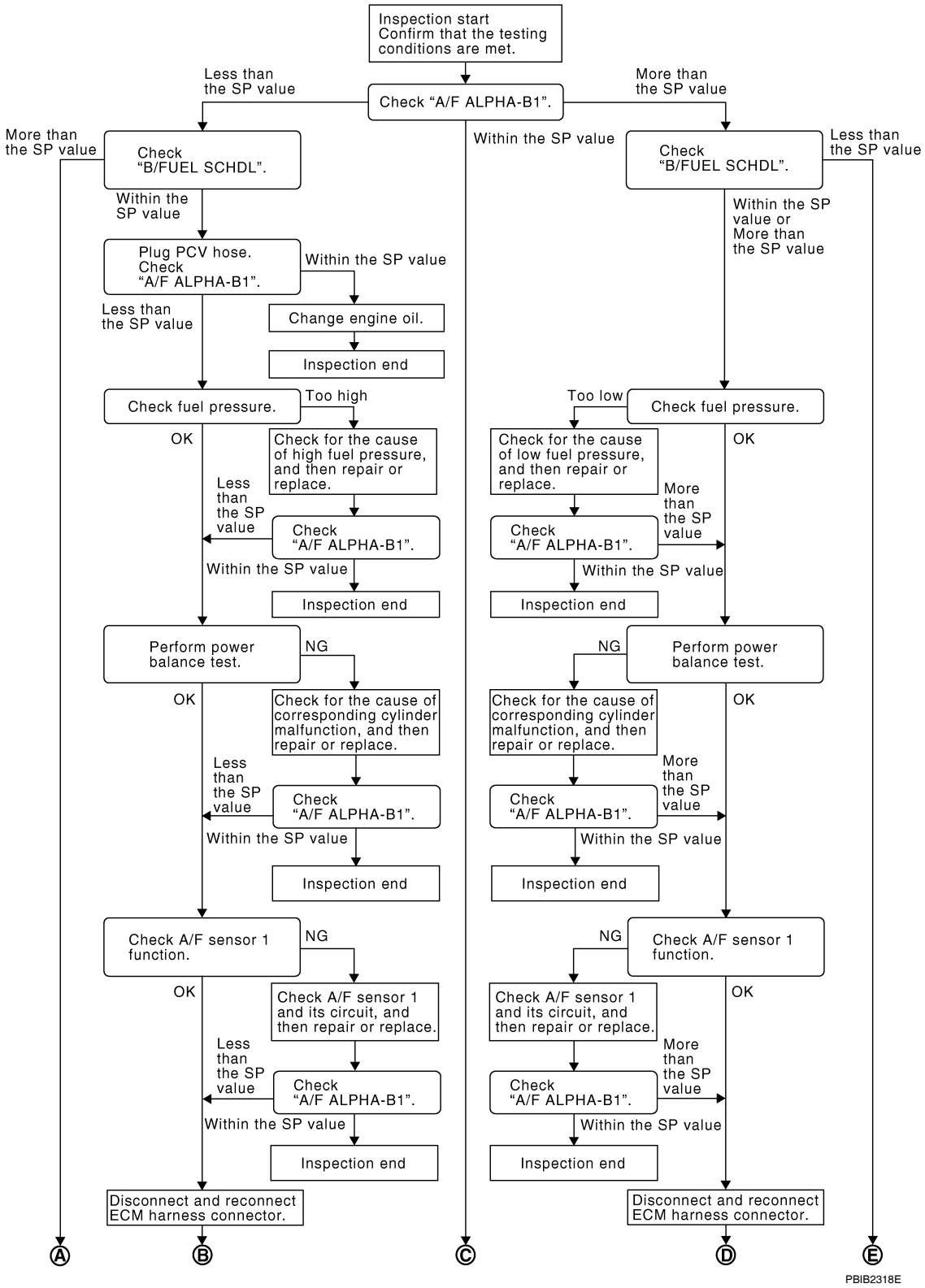
Inspection start
Confirm that the testing conditions are met.
Check "A/F ALPHA-B1".
Less than the SP value
More than the SP value
Within the SP value
Check "B/FUEL SCHDL".
More than the SP value
Less than the SP value
Within the SP value
Plug PCV hose. Check "A/F ALPHA-B1".
Within the SP value
Change engine oil.
Inspection end
Less than the SP value
Check fuel pressure.
Too high
Check for the cause of high fuel pressure, and then repair or replace.
Check "A/F ALPHA-B1".
Less than the SP value
Within the SP value
Inspection end
OK
Perform power balance test.
NG
Check for the cause of corresponding cylinder malfunction, and then repair or replace.
Check "A/F ALPHA-B1".
Less than the SP value
Within the SP value
Inspection end
OK
Check A/F sensor 1 function.
NG
Check A/F sensor 1 and its circuit, and then repair or replace.
Check "A/F ALPHA-B1".
Less than the SP value
Within the SP value
Inspection end
OK
Disconnect and reconnect ECM harness connector.
Check "B/FUEL SCHDL".
Less than the SP value
Within the SP value or More than the SP value
Check fuel pressure.
Too low
Check for the cause of low fuel pressure, and then repair or replace.
Check "A/F ALPHA-B1".
More than the SP value
Within the SP value
Inspection end
OK
Perform power balance test.
NG
Check for the cause of corresponding cylinder malfunction, and then repair or replace.
Check "A/F ALPHA-B1".
More than the SP value
Within the SP value
Inspection end
OK
Check A/F sensor 1 function.
NG
Check A/F sensor 1 and its circuit, and then repair or replace.
Check "A/F ALPHA-B1".
More than the SP value
Within the SP value
Inspection end
OK
Disconnect and reconnect ECM harness connector.
A
B
C
D
E
PBIB2318E

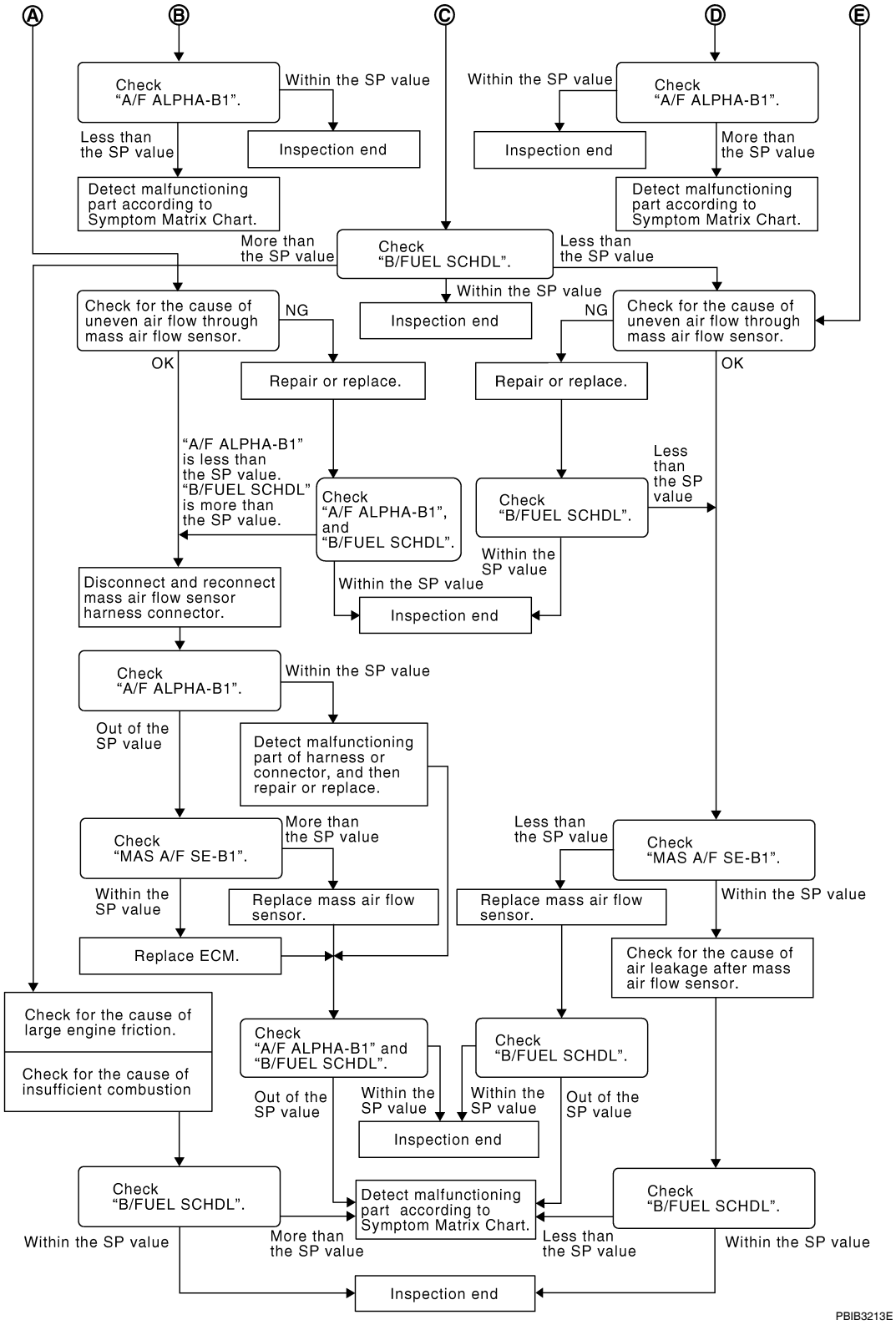

DETAILED PROCEDURE

1. CHECK "A/F ALPHA-B1"

1. Start engine.
2. Confirm that the testing conditions are met. Refer to EC-698, "Testing Condition".
3. Select "A/F ALPHA-B1" in "SPEC" of "DATA MONITOR" mode, and make sure that the indication is within the SP value.

NOTE:

Check “A/F ALPHA-B1” for approximately 1 minute because they may fluctuate. It is NG if the indication is out of the SP value even a little.

OK or NG

OK >> GO TO 17.
NG (Less than the SP value)>>GO TO 2.
NG (More than the SP value)>>GO TO 3.

2. CHECK “B/FUEL SCHDL”

Select “B/FUEL SCHDL” in “SPEC” of “DATA MONITOR” mode, and make sure that the indication is within the SP value.

OK or NG

OK >> GO TO 4.
NG (More than the SP value)>>GO TO 19.

3. CHECK “B/FUEL SCHDL”

Select “B/FUEL SCHDL” in “SPEC” of “DATA MONITOR” mode, and make sure that the indication is within the SP value.

OK or NG

OK >> GO TO 6.
NG (More than the SP value)>>GO TO 6.
NG (Less than the SP value)>>GO TO 25.

4. CHECK “A/F ALPHA-B1”

1. Stop the engine.
2. Disconnect PCV hose, and then plug it.
3. Start engine.
4. Select “A/F ALPHA-B1” in “SPEC” of “DATA MONITOR” mode, and make sure that the indication is within the SP value.

OK or NG

OK >> GO TO 5.
NG >> GO TO 6.

5. CHANGE ENGINE OIL

1. Stop the engine.
2. Change engine oil. Refer to MA-24, "ENGINE OIL : Changing Engine Oil".
   NOTE:
   This symptom may occur when a large amount of gasoline is mixed with engine oil because of driving conditions (such as when engine oil temperature does not rise enough since a journey distance is too short during winter). The symptom will not be detected after changing engine oil or changing driving condition.

>> **INSPECTION END**

6. CHECK FUEL PRESSURE

Check fuel pressure. (Refer to EC-656, "Fuel Pressure Check".)

OK or NG

OK >> GO TO 9.
NG (Fuel pressure is too high)>>Replace fuel pressure regulator, refer to EC-656, "Fuel Pressure Check". GO TO 8.
NG (Fuel pressure is too low)>>GO TO 7.

7. DETECT MALFUNCTIONING PART

1. Check the following.
- Clogged and bent fuel hose and fuel tube
- Clogged fuel filter
- Fuel pump and its circuit (Refer to EC-1094.)
2. If NG, repair or replace the malfunctioning part. (Refer to EC-656, "Fuel Pressure Check".)
   If OK, replace fuel pressure regulator.

>> GO TO 8.

8. CHECK “A/F ALPHA-B1”

1. Start engine.
2. Select “A/F ALPHA-B1” in “SPEC” of “DATA MONITOR” mode, and make sure that the indication is within the SP value.

OK or NG

OK >> **INSPECTION END**
NG >> GO TO 9.

9. PERFORM POWER BALANCE TEST

1. Perform “POWER BALANCE” in “ACTIVE TEST” mode.
2. Make sure that the each cylinder produces a momentary engine speed drop.

OK or NG

OK >> GO TO 12.
NG >> GO TO 10.

10. DETECT MALFUNCTIONING PART

1. Check the following.
- Ignition coil and its circuit (Refer to EC-1099.)
- Fuel injector and its circuit (Refer to EC-1089.)
- Intake air leakage
- Low compression pressure (Refer to EM-65, "On-Vehicle Service".)
2. If NG, repair or replace the malfunctioning part.
   If OK, replace fuel injector. (It may be caused by leakage from fuel injector or clogging.)

>> GO TO 11.

11. CHECK “A/F ALPHA-B1”

1. Start engine.
2. Select “A/F ALPHA-B1” in “SPEC” of “DATA MONITOR” mode, and make sure that the indication is within the SP value.

OK or NG

OK >> **INSPECTION END**
NG >> GO TO 12.

12. CHECK A/F SENSOR 1 FUNCTION

Perform all DTC Confirmation Procedure related with A/F sensor 1.
- For DTC P0130, refer to EC-779, "DTC Confirmation Procedure".
- For DTC P0131, refer to EC-785, "DTC Confirmation Procedure".
- For DTC P0132, refer to EC-791, "DTC Confirmation Procedure".
- For DTC P0133, refer to EC-797, "DTC Confirmation Procedure".
- For DTC P2A00, refer to EC-1069, "DTC Confirmation Procedure".

OK or NG

OK >> GO TO 15.
NG >> GO TO 13.

13. CHECK A/F SENSOR 1 CIRCUIT

Perform Diagnostic Procedure according to corresponding DTC.

>> GO TO 14.

14. CHECK “A/F ALPHA-B1”

1. Start engine.
2. Select “A/F ALPHA-B1” in “SPEC” of “DATA MONITOR” mode, and make sure that the indication is within the SP value.

OK or NG

OK >> **INSPECTION END**
NG >> GO TO 15.

15. DISCONNECT AND RECONNECT ECM HARNESS CONNECTOR

1. Stop the engine.
2. Disconnect ECM harness connector. Check pin terminal and connector for damage, and then reconnect it.

>> GO TO 16.

16. CHECK “A/F ALPHA-B1”

1. Start engine.
2. Select “A/F ALPHA-B1” in “SPEC” of “DATA MONITOR” mode, and make sure that the indication is within the SP value.

OK or NG

OK >> **INSPECTION END**
NG >> Detect malfunctioning part according to EC-666, "Symptom Matrix Chart".

17. CHECK “B/FUEL SCHDL”

Select “B/FUEL SCHDL” in “SPEC” of “DATA MONITOR” mode, and make sure that the indication is within the SP value.

OK or NG

OK >> **INSPECTION END**
NG (More than the SP value)>>GO TO 18.
NG (Less than the SP value)>>GO TO 25.

18. DETECT MALFUNCTIONING PART

1. Check for the cause of large engine friction. Refer to the following.
- Engine oil level is too high
- Engine oil viscosity
- Belt tension of alternator, A/C compressor, etc. is excessive
- Noise from engine
- Noise from transmission, etc.
2. Check for the cause of insufficient combustion. Refer to the following.
- Valve clearance malfunction
- Intake valve timing control function malfunction
- Camshaft sprocket installation malfunction, etc.

>> Repair or replace malfunctioning part, and then GO TO 30.

19. CHECK INTAKE SYSTEM

Check for the cause of uneven air flow through mass air flow sensor. Refer to the following.
- Crushed air ducts
- Malfunctioning seal of air cleaner element
- Uneven dirt of air cleaner element
- Improper specification of intake air system

OK or NG

OK >> GO TO 21.
NG >> Repair or replace malfunctioning part, and then GO TO 20.

20. CHECK “A/F ALPHA-B1” AND “B/FUEL SCHDL”

Select “A/F ALPHA-B1” and “B/FUEL SCHDL” in “SPEC” of “DATA MONITOR” mode, and make sure that the each indication is within the SP value.

OK or NG

OK >> **INSPECTION END**
NG (“B/FUEL SCHDL” is more, “A/F ALPHA-B1” is less than the SP value)>>GO TO 21.

21. DISCONNECT AND RECONNECT MASS AIR FLOW SENSOR HARNESS CONNECTOR

1. Stop the engine.

2. Disconnect mass air flow sensor harness connector. Check pin terminal and connector for damage and then reconnect it again.

>> GO TO 22.

22. CHECK “A/F ALPHA-B1”

1. Start engine.
2. Select “A/F ALPHA-B1” in “SPEC” of “DATA MONITOR” mode, and make sure that the indication is within the SP value.

OK or NG

OK >> 1. Detect malfunctioning part of mass air flow sensor circuit and repair it. Refer to EC-739.
2. GO TO 29.

NG >> GO TO 23.

23. CHECK “MAS A/F SE-B1”

Select “MAS A/F SE-B1” in “SPEC” of “DATA MONITOR” mode, and make sure that the indication is within the SP value.

OK or NG

OK >> GO TO 24.

NG (More than the SP value)>>Replace mass air flow sensor, and then GO TO 29.

24. REPLACE ECM

1. Replace ECM.
2. Perform initialization of NVIS(NATS) system and registration of all NVIS(NATS) ignition key IDs. Refer to BL-171, "ECM Re-communicating Function".
3. Perform EC-654, "VIN Registration".
4. Perform EC-654, "Accelerator Pedal Released Position Learning".
5. Perform EC-654, "Throttle Valve Closed Position Learning".
6. Perform EC-654, "Idle Air Volume Learning".

>> GO TO 29.

25. CHECK INTAKE SYSTEM

Check for the cause of uneven air flow through mass air flow sensor. Refer to the following.

- Crushed air ducts
- Malfunctioning seal of air cleaner element
- Uneven dirt of air cleaner element
- Improper specification of intake air system

OK or NG

OK >> GO TO 27.

NG >> Repair or replace malfunctioning part, and then GO TO 26.

26. CHECK “B/FUEL SCHDL”

Select “B/FUEL SCHDL” in “SPEC” of “DATA MONITOR” mode, and make sure that the indication is within the SP value.

OK or NG

OK >> **INSPECTION END**

NG (Less than the SP value)>>GO TO 27.

27. CHECK “MAS A/F SE-B1”

Select “MAS A/F SE-B1” in “SPEC” of “DATA MONITOR” mode, and make sure that the indication is within the SP value.

OK or NG

OK >> GO TO 28.

NG (Less than the SP value)>>Replace mass air flow sensor, and then GO TO 30.

28. CHECK INTAKE SYSTEM

Check for the cause of air leak after the mass air flow sensor. Refer to the following.

- Disconnection, looseness, and cracks in air duct
- Looseness of oil filler cap
- Disconnection of oil level gauge
- Open stuck, breakage, hose disconnection, or cracks of PCV valve
- Disconnection or cracks of EVAP purge hose, open stuck of EVAP canister purge volume control solenoid valve
- Malfunctioning seal of rocker cover gasket
- Disconnection, looseness, or cracks of hoses, such as vacuum hose, connecting to intake air system parts
- Malfunctioning seal of intake air system, etc.

>> GO TO 30.

29. CHECK “A/F ALPHA-B1” AND “B/FUEL SCHDL”

Select “A/F ALPHA-B1” and “B/FUEL SCHDL” in “SPEC” of “DATA MONITOR” mode, and make sure that the each indication is within the SP value.

OK or NG

OK >> **INSPECTION END**
NG >> Detect malfunctioning part according to EC-666, "Symptom Matrix Chart".

30. CHECK “B/FUEL SCHDL”

Select “B/FUEL SCHDL” in “SPEC” of “DATA MONITOR” mode, and then make sure that the indication is within the SP value.

OK or NG

OK >> **INSPECTION END**
NG >> Detect malfunctioning part according to EC-666, "Symptom Matrix Chart".

TROUBLE DIAGNOSIS FOR INTERMITTENT INCIDENT

Description

INFOID:0000000005285189

Intermittent incidents may occur. In many cases, the malfunction resolves itself (the part or circuit function returns to normal without intervention). It is important to realize that the symptoms described in the customer's complaint often do not recur on (1st trip) DTC visits. Realize also that the most frequent cause of Intermittent Incidents occurrences is poor electrical connections. Because of this, the conditions under which the incident occurred may not be clear. Therefore, circuit checks made as part of the standard diagnostic procedure may not indicate the specific malfunctioning area.

Common Intermittent Incidents Report Situations

STEP in Work Flow	Situation
2	The CONSULT-III is used. The SELF-DIAG RESULTS screen shows time data other than 0 or [1t].
3 or 4	The symptom described by the customer does not recur.
5	(1st trip) DTC does not appear during the DTC Confirmation Procedure.
10	The Diagnostic Procedure for PXXXX does not indicate the malfunctioning area.

Diagnosis Procedure

INFOID:0000000005285190

1. INSPECTION START

Erase (1st trip) DTCs.
Refer to EC-617, "Emission-related Diagnostic Information".

>> GO TO 2.

2. CHECK GROUND TERMINALS

Check ground terminals for corroding or loose connection.
Refer to EC-711, "Ground Inspection".

OK or NG

OK >> GO TO 3.
NG >> Repair or replace.

3. SEARCH FOR ELECTRICAL INCIDENT

Perform GI-26, "How to Perform Efficient Diagnosis for an Electrical Incident", “INCIDENT SIMULATION TESTS”.

OK or NG

OK >> GO TO 4.
NG >> Repair or replace.

4. CHECK CONNECTOR TERMINALS

Refer to GI-23, "How to Check Terminal", “HOW TO PROBE CONNECTORS”, “How to Check Enlarged Contact Spring of Terminal”.

OK or NG

OK >> **INSPECTION END**
NG >> Repair or replace connector.

POWER SUPPLY AND GROUND CIRCUIT

Wiring Diagram

INFOID:0000000005285191

EC-KS-01

: DETECTABLE LINE FOR DTC
: NON-DETECTABLE LINE FOR DTC

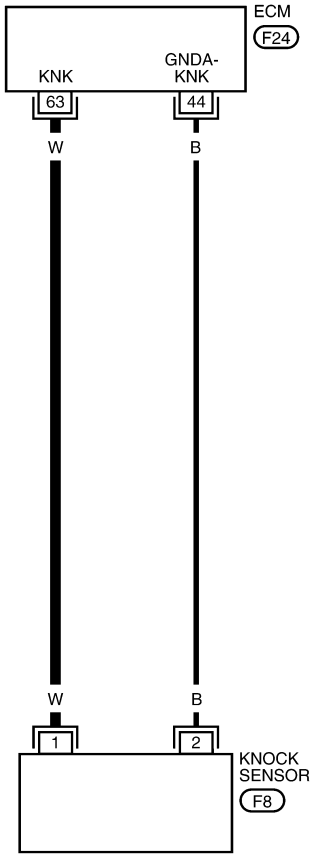

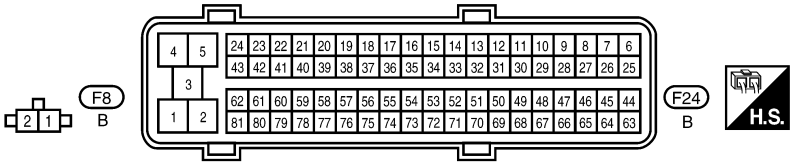

ABBWA0275GB

Specification data are reference values and are measured between each terminal and ground.

CAUTION:

Do not use ECM ground terminals when measuring input/output voltage. Doing so may result in damage to the ECM's transistor. Use a ground other than ECM terminals, such as the ground.

TERMINAL NO.	WIRE COLOR	ITEM	CONDITION	DATA (DC Voltage)
10 11	B B	ECM ground	**[Engine is running]** • Idle speed	Body ground
32	R/G	ECM relay (Self shut-off)	**[Engine is running]** **[Ignition switch: OFF]** • For a few seconds after turning ignition switch OFF	0 - 1.0 V
			[Ignition switch: OFF] • More than a few seconds after turning ignition switch OFF	BATTERY VOLTAGE (11 - 14 V)
93	B/R	Ignition switch	**[Ignition switch: OFF]**	0 V
			[Ignition switch: ON]	BATTERY VOLTAGE (11 - 14 V)
105	G	Power supply for ECM	**[Ignition switch: ON]**	BATTERY VOLTAGE (11 - 14 V)
107 108 109 112	B B B B	ECM ground	**[Engine is running]** • Idle speed	Body ground

Diagnosis Procedure

INFOID:0000000005285192

1. INSPECTION START

Start engine.
Is engine running?

Yes or No

Yes >> GO TO 8.
No >> GO TO 2.

2. CHECK ECM POWER SUPPLY CIRCUIT-I

1. Turn ignition switch OFF and then ON.
2. Check voltage between ECM terminal 93 and ground with CONSULT-III or tester.

Voltage: Battery voltage

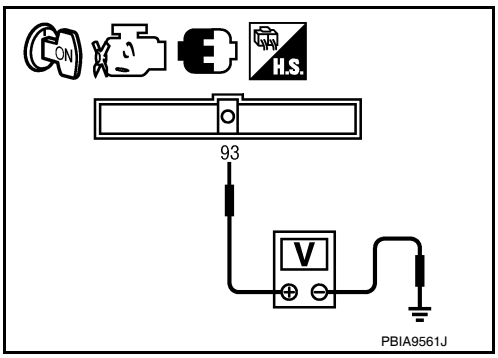

OK or NG

OK >> GO TO 4.
NG >> GO TO 3.

3. DETECT MALFUNCTIONING PART

Check the following.
- Harness connectors M6, E19
- Harness for open or short between ECM and ignition switch

>> Repair open circuit or short to ground or short to power in harness or connectors.

4. CHECK GROUND CONNECTIONS

1. Turn ignition switch OFF.

2. Loosen and retighten ground screws on the body.
   Refer to EC-711, "Ground Inspection".
- ⇦ : Vehicle front
- Body ground (1)

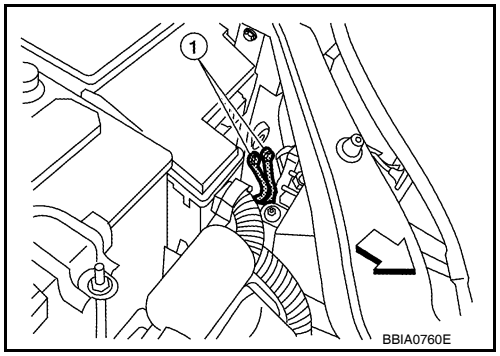

OK or NG

OK >> GO TO 5.
NG >> Repair or replace ground connections.

5. CHECK ECM GROUND CIRCUIT FOR OPEN AND SHORT-I

1. Disconnect ECM harness connector.
2. Check harness continuity between ECM terminals 10, 11, 107, 108, 109, 112 and ground.
   Refer to Wiring Diagram.

Continuity should exist.

3. Also check harness for short to power.

OK or NG

OK >> GO TO 7.
NG >> GO TO 6.

6. DETECT MALFUNCTIONING PART

Check the following.
- Harness connectors E17, F10
- Harness for open or short between ECM and ground

>> Repair open circuit or short to power in harness or connectors.

7. CHECK ECM POWER SUPPLY CIRCUIT-II

1. Reconnect ECM harness connector.
2. Turn ignition switch ON.
3. Check voltage between IPDM E/R terminal 3 and ground with CONSULT-III or tester.

Voltage: Battery voltage

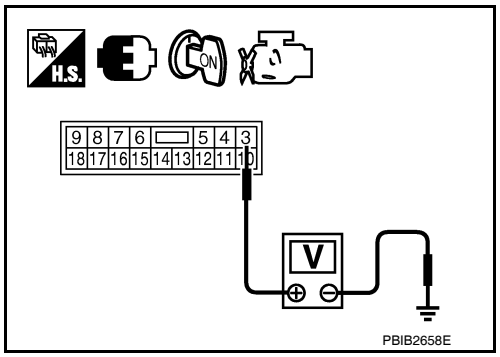

OK or NG

OK >> Go to EC-1099.
NG >> GO TO 8.

8. CHECK ECM POWER SUPPLY CIRCUIT-III

1. Turn ignition switch OFF and wait at least 10 seconds.
2. Turn ignition switch ON and then OFF.

3. Check voltage between ECM terminal 105 and ground with CONSULT-III or tester.

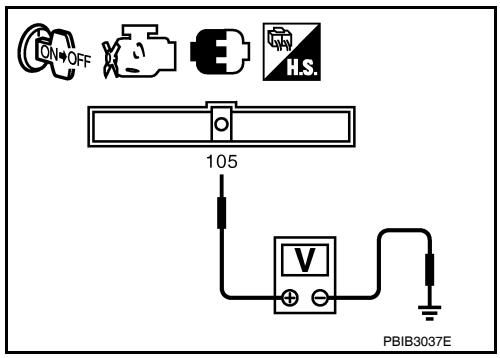

Voltage: After turning ignition switch OFF, battery voltage will exist for a few seconds, then drop approximately 0 V.

OK or NG

OK >> GO TO 14.
NG (Battery voltage does not exist.)>>GO TO 9.
NG (Battery voltage exists for more than a few seconds.)>>GO TO 11.

9. CHECK ECM POWER SUPPLY CIRCUIT-IV

1. Turn ignition switch OFF and wait at least 10 seconds.
2. Check voltage between ECM terminal 32 and ground with CONSULT-III or tester.

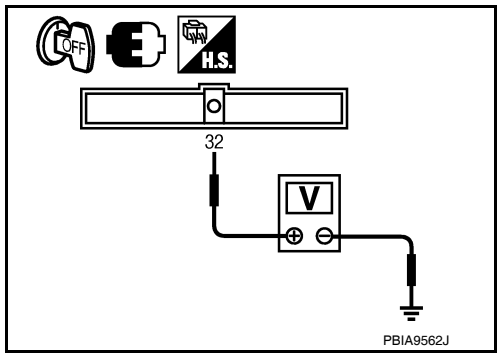

Voltage: Battery voltage

OK or NG

OK >> GO TO 10.
NG >> GO TO 11.

10. CHECK ECM POWER SUPPLY CIRCUIT-V

1. Disconnect ECM harness connector.
2. Disconnect IPDM E/R harness connector E43.
3. Check harness continuity between ECM terminal 105 and IPDM E/R terminal 4. Refer to Wiring Diagram.

Continuity should exist.

4. Also check harness for short to ground and short to power.

OK or NG

OK >> GO TO 17.
NG >> Repair open circuit or short to ground or short to power in harness or connectors.

11. CHECK ECM POWER SUPPLY CIRCUIT-VI

1. Disconnect ECM harness connector.
2. Disconnect IPDM E/R harness connector E43.
3. Check harness continuity between ECM terminal 32 and IPDM E/R terminal 7. Refer to Wiring Diagram.

Continuity should exist.

4. Also check harness for short to ground and short to power.

OK or NG

OK >> GO TO 13.
NG >> GO TO 12.

12. DETECT MALFUNCTIONING PART

Check the following.
- Harness connectors E17, F10
- Harness for open or short between ECM and IPDM E/R

>> Repair open circuit or short to ground or short to power in harness or connectors.

13. CHECK 20 A FUSE

1. Disconnect 20 A fuse from IPDM E/R.
2. Check 20 A fuse.

OK or NG

OK >> GO TO 17.
NG >> Replace 20 A fuse.

14. CHECK GROUND CONNECTIONS

Loosen and retighten ground screws on the body.
Refer to EC-711, "Ground Inspection".

- ⇦ : Vehicle front
- Body ground (1)

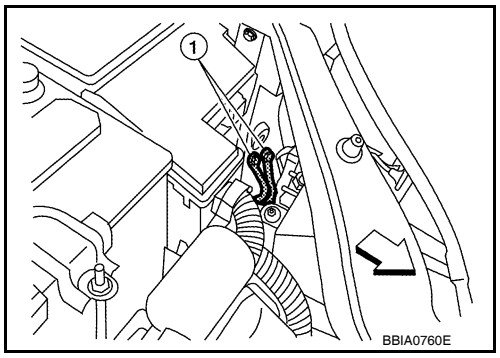

OK or NG

OK >> GO TO 15.
NG >> Repair or replace ground connections.

15. CHECK ECM GROUND CIRCUIT FOR OPEN AND SHORT-II

1. Disconnect ECM harness connector.
2. Check harness continuity between ECM terminals 10, 11, 107, 108, 109, 112 and ground. Refer to Wiring Diagram.

Continuity should exist.

3. Also check harness for short to power.

OK or NG

OK >> GO TO 17.
NG >> GO TO 16.

16. DETECT MALFUNCTIONING PART

Check the following.

- Harness connectors E17, F10
- Harness for open or short between ECM and ground

>> Repair open circuit or short to power in harness or connectors.

17. CHECK INTERMITTENT INCIDENT

Refer to EC-706.

OK or NG

OK >> Replace IPDM E/R. Refer to PG-17.
NG >> Repair open circuit or short to power in harness or connectors.

Ground Inspection

INFOID:0000000005285193

Ground connections are very important to the proper operation of electrical and electronic circuits. Ground connections are often exposed to moisture, dirt and other corrosive elements. The corrosion (rust) can become an unwanted resistance. This unwanted resistance can change the way a circuit works.
Electronically controlled circuits are very sensitive to proper grounding. A loose or corroded ground can drastically affect an electronically controlled circuit. A poor or corroded ground can easily affect the circuit. Even when the ground connection looks clean, there can be a thin film of rust on the surface.
When inspecting a ground connection follow these rules:

- Remove the ground bolt or screw.
- Inspect all mating surfaces for tarnish, dirt, rust, etc.
- Clean as required to assure good contact.

- Reinstall bolt or screw securely.
- Inspect for “add-on” accessories which may be interfering with the ground circuit.
- If several wires are crimped into one ground eyelet terminal, check for proper crimps. Make sure all of the wires are clean, securely fastened and providing a good ground path. If multiple wires are cased in one eyelet make sure no ground wires have excess wire insulation.

For detailed ground distribution information, refer to PG-29, "Ground Distribution".

Ground Inspection

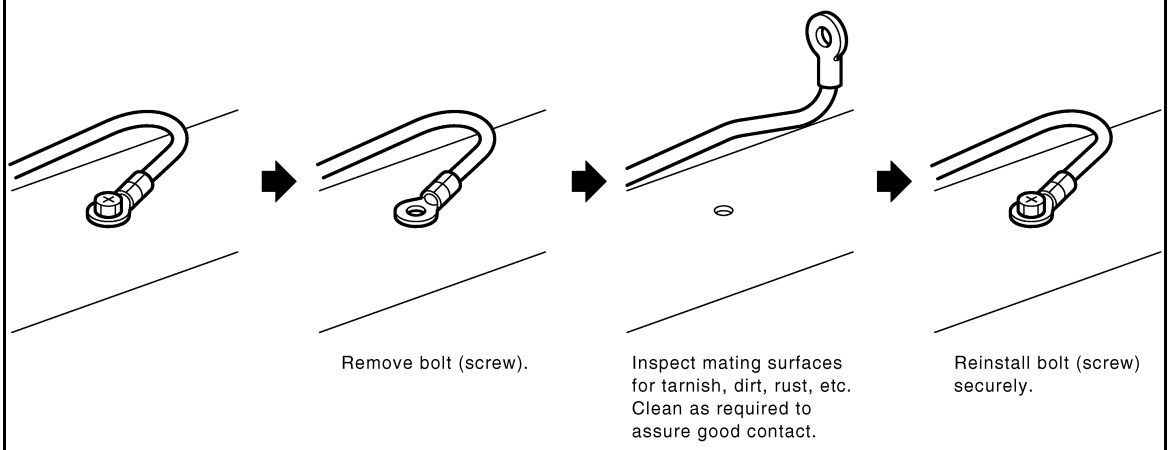

DTC U0101 CAN COMMUNICATION LINE

Description

INFOID:0000000005285194

CAN (Controller Area Network) is a serial communication line for real time application. It is an on-vehicle multiplex communication line with high data communication speed and excellent error detection ability. Many electronic control units are equipped onto a vehicle, and each control unit shares information and links with other control units during operation (not independent). In CAN communication, control units are connected with 2 communication lines (CAN H line, CAN L line) allowing a high rate of information transmission with less wiring. Each control unit transmits/receives data but selectively reads required data only.

On Board Diagnosis Logic

INFOID:0000000005285195

This self-diagnosis has the one trip detection logic.

DTC No.	Trouble diagnosis name	DTC detecting condition	Possible cause
U0101 0101	Lost communication with TCM	When ECM is not transmitting or receiving CAN communication signal of OBD (emission-related diagnosis) with TCM for 2 seconds or more.	• CAN communication line between TCM and ECM • CAN communication line is open or shorted.

DTC Confirmation Procedure

INFOID:0000000005285196

1. Turn ignition switch ON and wait at least 3 seconds.
2. Check DTC.
3. If DTC is detected, go to EC-714, "Diagnosis Procedure".

Wiring Diagram

INFOID:0000000005285197

EC-CAN-01

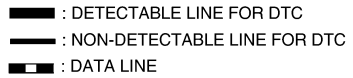

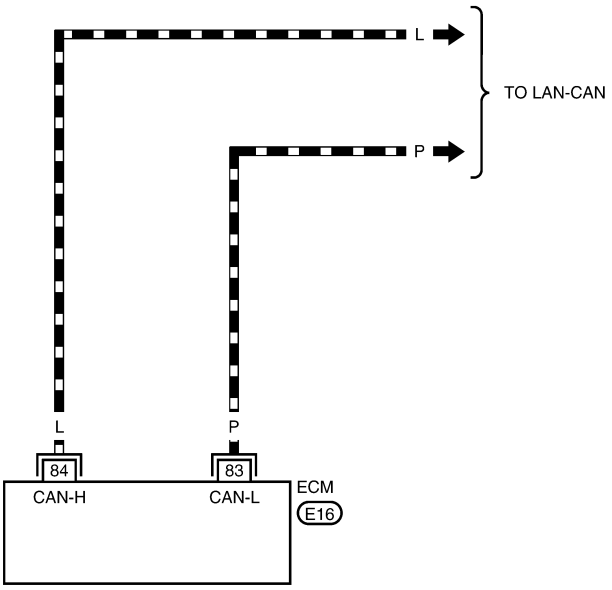

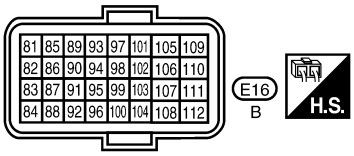

BBWA2870E

Diagnosis Procedure

INFOID:0000000005285198

Go to LAN-17, "Trouble Diagnosis Flow Chart".

DTC U0140 CAN COMMUNICATION LINE

Description

INFOID:0000000005285199

CAN (Controller Area Network) is a serial communication line for real time application. It is an on-vehicle multiplex communication line with high data communication speed and excellent error detection ability. Many electronic control units are equipped onto a vehicle, and each control unit shares information and links with other control units during operation (not independent). In CAN communication, control units are connected with 2 communication lines (CAN H line, CAN L line) allowing a high rate of information transmission with less wiring. Each control unit transmits/receives data but selectively reads required data only.

On Board Diagnosis Logic

INFOID:0000000005285200

This self-diagnosis has the one trip detection logic.

DTC No.	Trouble diagnosis name	DTC detecting condition	Possible cause
U0140 0140	Lost communication with BCM	When ECM is not transmitting or receiving CAN communication signal of OBD (emission-related diagnosis) with BCM for 2 seconds or more.	• CAN communication line between BCM and ECM • CAN communication line is open or shorted.

DTC Confirmation Procedure

INFOID:0000000005285201

1. Turn ignition switch ON and wait at least 3 seconds.
2. Check DTC.
3. If DTC is detected, go to EC-716, "Diagnosis Procedure".

Wiring Diagram

INFOID:0000000005285202

EC-CAN-01

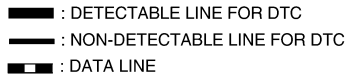

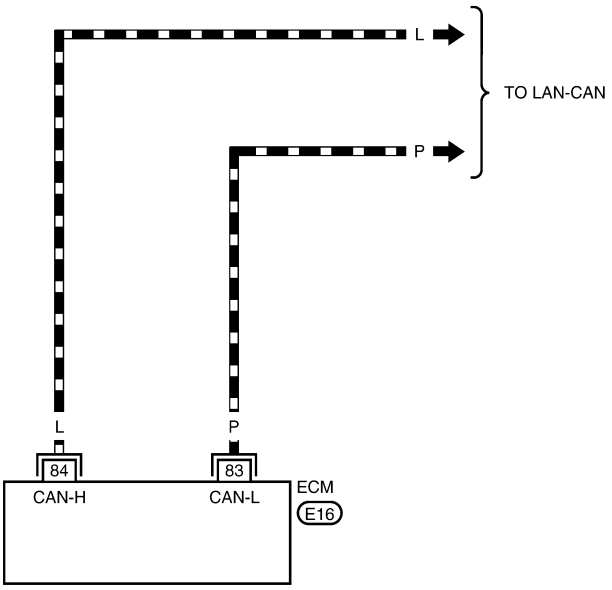

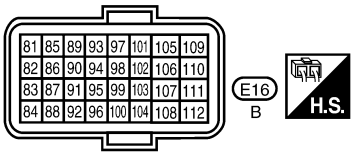

BBWA2870E

Diagnosis Procedure

INFOID:0000000005285203

Go to LAN-17, "Trouble Diagnosis Flow Chart".

DTC U1001 CAN COMMUNICATION LINE

Description

INFOID:0000000005285204

CAN (Controller Area Network) is a serial communication line for real time application. It is an on-vehicle multiplex communication line with high data communication speed and excellent error detection ability. Many electronic control units are equipped onto a vehicle, and each control unit shares information and links with other control units during operation (not independent). In CAN communication, control units are connected with 2 communication lines (CAN H line, CAN L line) allowing a high rate of information transmission with less wiring. Each control unit transmits/receives data but selectively reads required data only.

On Board Diagnosis Logic

INFOID:0000000005285205

The MIL will not light up for this self-diagnosis.

DTC No.	Trouble diagnosis name	DTC detecting condition	Possible cause
U1001 1001	CAN communication line	When ECM is not transmitting or receiving CAN communication signal other than OBD (emission-related diagnosis) for 2 seconds or more.	• Harness or connectors (CAN communication line is open or shorted.)

DTC Confirmation Procedure

INFOID:0000000005285206

1. Turn ignition switch ON and wait at least 3 seconds.
2. Check 1st trip DTC.
3. If 1st trip DTC is detected, go to EC-718, "Diagnosis Procedure".

Wiring Diagram

INFOID:0000000005285207

EC-CAN-01

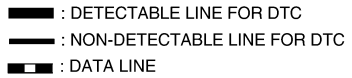

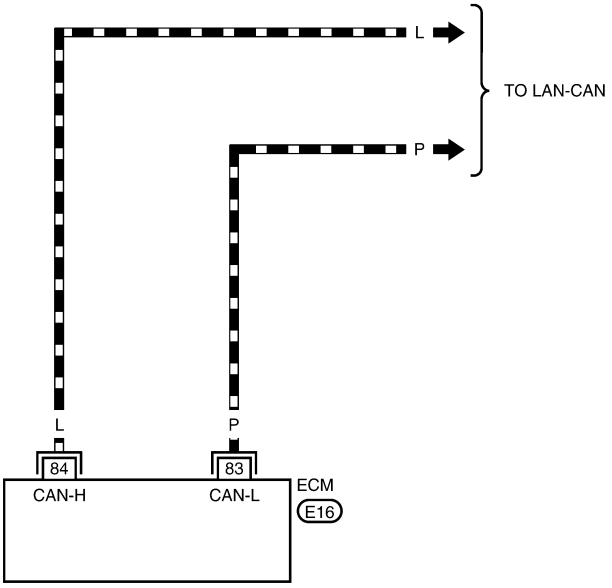

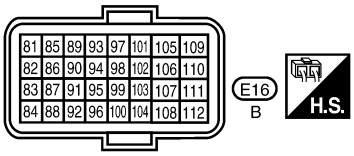

BBWA2870E

Diagnosis Procedure

INFOID:0000000005285208

Go to LAN-17, "Trouble Diagnosis Flow Chart".

DTC P0011 IVT CONTROL

Description

INFOID:0000000005285209

SYSTEM DESCRIPTION

Sensor	Input signal to ECM	ECM function	Actuator
Crankshaft position sensor (POS) Camshaft position sensor (PHASE)	Engine speed and piston position	Intake valve timing control	Intake valve timing control solenoid valve
Engine coolant temperature sensor	Engine coolant temperature		
Engine oil temperature sensor	Engine oil temperature		
ABS actuator and electric unit (control unit)	Vehicle speed*		
Combination meter			

*: This signal is sent to the ECM through CAN communication line.

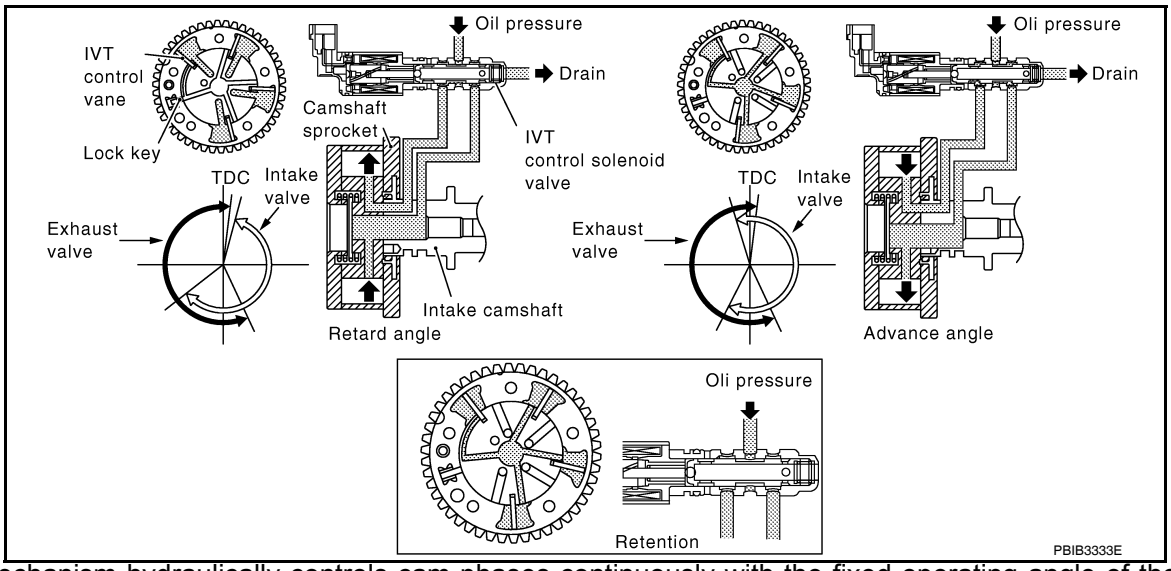

This mechanism hydraulically controls cam phases continuously with the fixed operating angle of the intake valve. The ECM receives signals such as crankshaft position, camshaft position, engine speed, and engine coolant temperature. Then, the ECM sends ON/OFF pulse duty signals to the intake valve timing control solenoid valve depending on driving status. This makes it possible to control the shut/open timing of the intake valve to increase engine torque in low/mid speed range and output in high-speed range.

CONSULT-III Reference Value in Data Monitor Mode

INFOID:0000000005285210

Specification data are reference values.

Monitor item	Condition		Specification
INT/V TIM (B1)	• Engine: After warming up • Air conditioner switch: OFF • Shift lever: P or N (CVT), Neutral (M/T) • No load	Idle	−5° - 5°CA
		When revving engine up to 2,000 rpm quickly	Approx. 0° - 40°CA
INT/V SOL (B1)	• Engine: After warming up • Air conditioner switch: OFF • Shift lever: P or N (CVT), Neutral (M/T) • No load	Idle	0% - 2%
		When revving engine up to 2,000 rpm quickly	Approx. 0% - 90%

On Board Diagnosis Logic

INFOID:0000000005285211

DTC No.	Trouble diagnosis name	Detecting condition	Possible cause
P0011 0011	Intake valve timing control performance	There is a gap between angle of target and phase-control angle degree.	• Crankshaft position sensor (POS) • Camshaft position sensor (PHASE) • Intake valve timing control solenoid valve • Accumulation of debris to the signal pick-up portion of the camshaft • Timing chain installation • Foreign matter caught in the oil groove for intake valve timing control

FAIL-SAFE MODE

ECM enters in fail-safe mode when the malfunction is detected.

Detected items	Engine operating condition in fail-safe mode
Intake valve timing control	The signal is not energized to the solenoid valve and the valve control does not function

DTC Confirmation Procedure

INFOID:0000000005285212

CAUTION:
Always drive at a safe speed.
NOTE:
- **If DTC P0011 is displayed with DTC P0075, first perform trouble diagnosis for DTC P0075. See EC-734.**
- If DTC Confirmation Procedure has been previously conducted, always turn ignition switch OFF and wait at least 10 seconds before conducting the next test.

TESTING CONDITION:
Before performing the following procedure, confirm that battery voltage is between 10 V and 16 V at idle.

WITH CONSULT-III

1. Turn ignition switch ON and select “DATA MONITOR” mode with CONSULT-III.
2. Start engine and warm it up to the normal operating temperature.
3. Maintain the following conditions for at least 10 consecutive seconds.
   Hold the accelerator pedal as steady as possible.

ENG SPEED	1,200 - 2,000 rpm (A constant rotation is maintained.)
COOLAN TEMP/S	More than 60°C (140°F)
B/FUEL SCHDL	More than 4.25 msec
Shift lever	P or N position (CVT) Neutral position (M/T)

4. Let engine idle for 10 seconds.
5. Check 1st trip DTC.
6. If 1st trip DTC is detected, go to EC-721, "Diagnosis Procedure".
   If 1st trip DTC is not detected, go to next step.
7. Maintain the following conditions for at least 10 consecutive seconds.

ENG SPEED	1,200 - 3,175 rpm (A constant rotation is maintained.)
COOLAN TEMP/S	More than 65°C (149°F)
Shift lever	1st or 2nd position
Driving location uphill	Driving vehicle uphill (Increased engine load will help maintain the driving conditions required for this test.)

8. Check 1st trip DTC.

9. If 1st trip DTC is detected, go to EC-721, "Diagnosis Procedure".

WITH GST
Follow the procedure “WITH CONSULT-III” above.

Diagnosis Procedure

INFOID:0000000005285213

1. CHECK OIL PRESSURE WARNING LAMP

1. Start engine.
2. Check oil pressure warning lamp and confirm it is not illuminated.

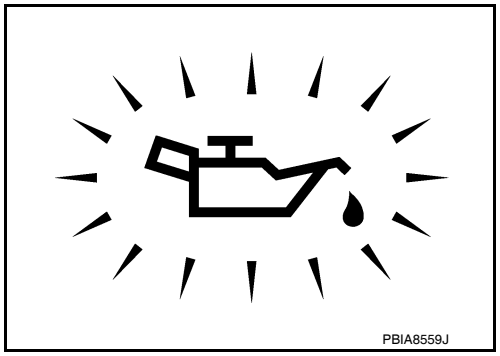

OK or NG

OK >> GO TO 2.
NG >> Go to LU-6, "Inspection".

2. CHECK INTAKE VALVE TIMING CONTROL SOLENOID VALVE

Refer to EC-722, "Component Inspection".

OK or NG

OK >> GO TO 3.
NG >> Replace intake valve timing control solenoid valve.

3. CHECK CRANKSHAFT POSITION SENSOR (POS)

Refer to EC-875, "Component Inspection".

OK or NG

OK >> GO TO 4.
NG >> Replace crankshaft position sensor (POS).

4. CHECK CAMSHAFT POSITION SENSOR (PHASE)

Refer to EC-880, "Component Inspection".

OK or NG

OK >> GO TO 5.
NG >> Replace camshaft position sensor (PHASE).

5. CHECK CAMSHAFT (INTAKE)

Check the following.
- Accumulation of debris to the signal plate of camshaft (1) rear end
- Chipping signal plate of camshaft rear end

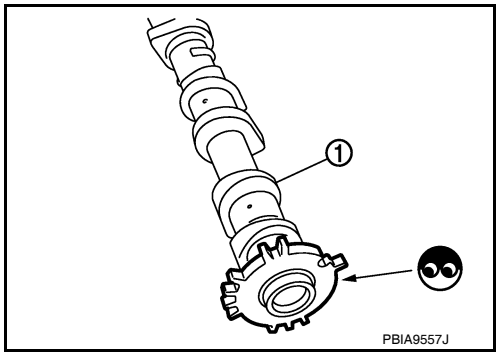

OK or NG

OK >> GO TO 6.
NG >> Remove debris and clean the signal plate of camshaft rear end or replace camshaft.

6. CHECK TIMING CHAIN INSTALLATION

Check service records for any recent repairs that may cause timing chain misaligned.
Are there any service records that may cause timing chain misaligned?

Yes or No

Yes >> Check timing chain installation. Refer to EM-40.
No >> GO TO 7.

7. CHECK LUBRICATION CIRCUIT

Refer to EM-50, "Removal and Installation".

OK or NG

OK >> GO TO 8.
NG >> Clean lubrication line.

8. CHECK INTERMITTENT INCIDENT

Refer to EC-706.
For Wiring Diagram, refer to EC-871, "Wiring Diagram" for CKP sensor (POS) and EC-877, "Wiring Diagram" for CMP sensor (PHASE).

>> **INSPECTION END**

Component Inspection

INFOID:0000000005285214

INTAKE VALVE TIMING CONTROL SOLENOID VALVE

1. Disconnect intake valve timing control solenoid valve harness connector.
2. Check resistance between intake valve timing control solenoid valve as follows.

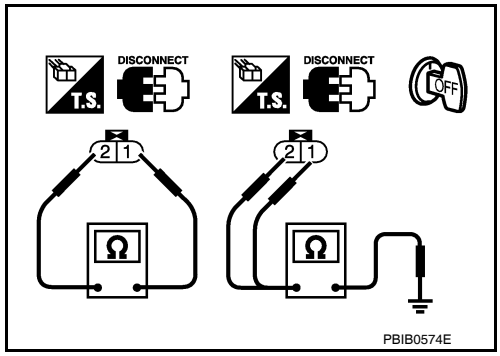

Terminal	Resistance
1 and 2	6.7 - 7.7 Ω [at 20°C (68°F)]
1 or 2 and ground	∞Ω (Continuity should not exist.)

If NG, replace intake valve timing control solenoid valve.
If OK, go to next step.

3. Remove intake valve timing control solenoid valve.
4. Provide 12 V DC between intake valve timing control solenoid valve terminals and then interrupt it. Make sure that the plunger moves as shown in the figure.
   CAUTION:
   Do not apply 12 V DC continuously for 5 seconds or more. Doing so may result in damage to the coil in intake valve timing control solenoid valve.
   If NG, replace intake valve timing control solenoid valve.
   NOTE:
   Always replace O-ring when intake valve timing control solenoid valve is removed.

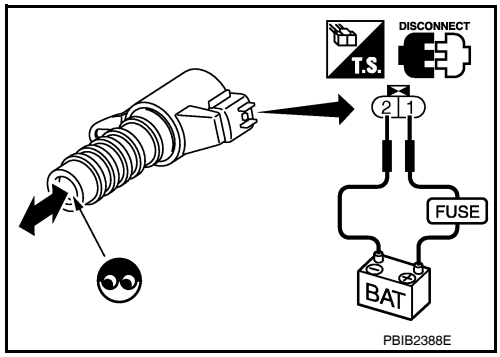

Removal and Installation

INFOID:0000000005285215

INTAKE VALVE TIMING CONTROL SOLENOID VALVE

Refer to EM-50.

DTC P0031, P0032 A/F SENSOR 1 HEATER

Description

INFOID:0000000005285216

SYSTEM DESCRIPTION

Sensor	Input Signal to ECM	ECM function	Actuator
Camshaft position sensor (PHASE) Crankshaft position sensor (POS)	Engine speed	Air fuel ratio (A/F) sensor 1 heater control	Air fuel ratio (A/F) sensor 1 heater
Mass air flow sensor	Amount of intake air		

The ECM performs ON/OFF duty control of the A/F sensor 1 heater corresponding to the engine operating condition to keep the temperature of A/F sensor 1 element at the specified range.

CONSULT-III Reference Value in Data Monitor Mode

INFOID:0000000005285217

Specification data are reference values.

Monitor item	Condition	Specification
A/F S1 HTR (B1)	• Engine: After warming up, idle the engine (More than 140 seconds after starting engine)	4 - 100%

On Board Diagnosis Logic

INFOID:0000000005285218

DTC No.	Trouble diagnosis name	DTC detecting condition	Possible cause
P0031 0031	Air fuel ratio (A/F) sensor 1 heater control circuit low	The current amperage in the air fuel ratio (A/F) sensor 1 heater circuit is out of the normal range. [An excessively low voltage signal is sent to ECM through the air fuel ratio (A/F) sensor 1 heater.]	• Harness or connectors [Air fuel ratio (A/F) sensor 1 heater circuit is open or shorted.] • Air fuel ratio (A/F) sensor 1 heater
P0032 0032	Air fuel ratio (A/F) sensor 1 heater control circuit high	The current amperage in the air fuel ratio (A/F) sensor 1 heater circuit is out of the normal range. [An excessively high voltage signal is sent to ECM through the air fuel ratio (A/F) sensor 1 heater.]	• Harness or connectors [Air fuel ratio (A/F) sensor 1 heater circuit is shorted.] • Air fuel ratio (A/F) sensor 1 heater

DTC Confirmation Procedure

INFOID:0000000005285219

NOTE:
If DTC Confirmation Procedure has been previously conducted, always turn ignition switch OFF and wait at least 10 seconds before conducting the next test.

TESTING CONDITION:
Before performing the following procedure, confirm that battery voltage is 11 V at idle.

1. Start engine and run it for at least 10 seconds at idle speed.
2. Check 1st trip DTC.
3. If 1st trip DTC is detected, go to EC-725, "Diagnosis Procedure".

Wiring Diagram

INFOID:0000000005285220

EC-A/FH-01

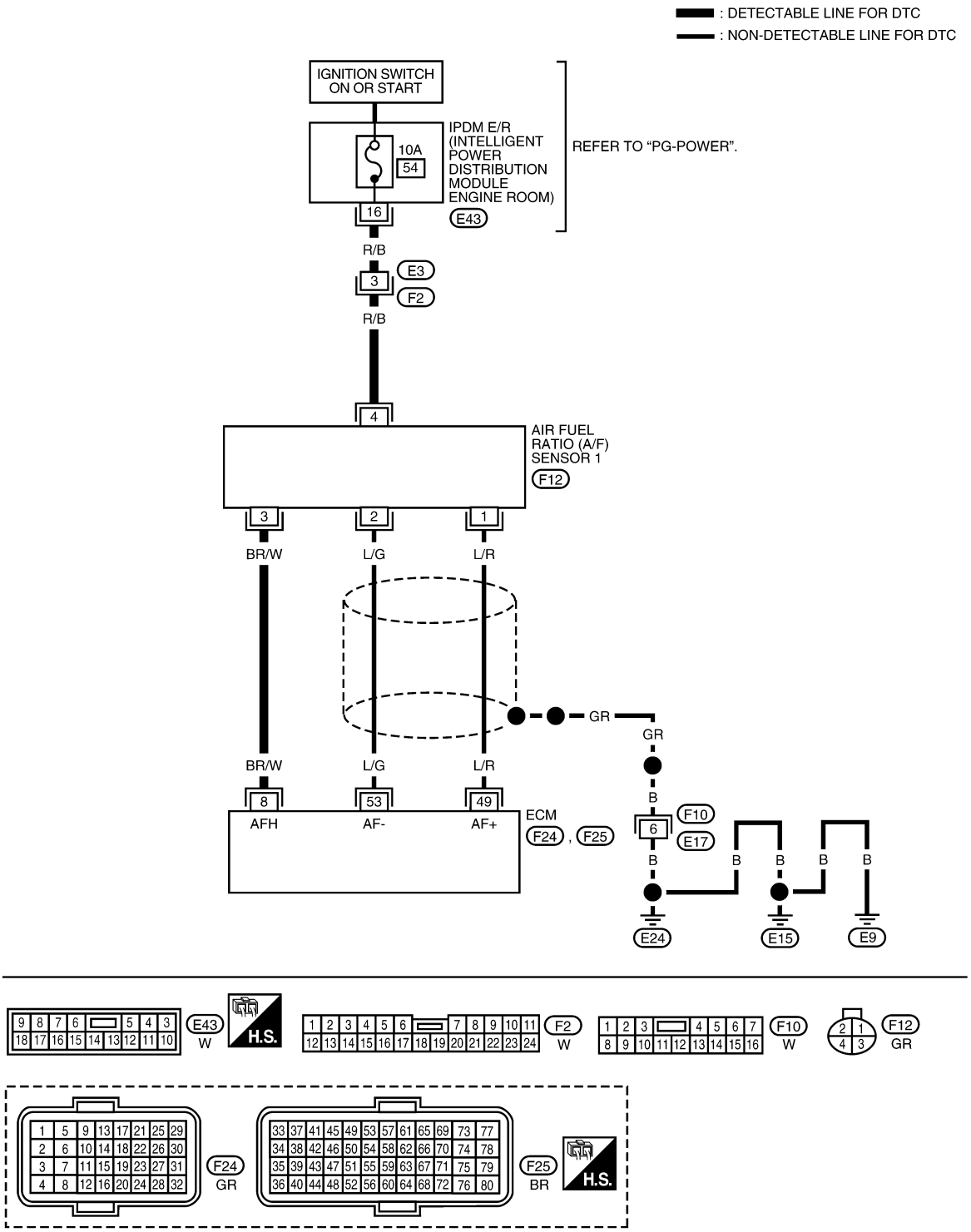

Specification data are reference values and are measured between each terminal and ground.
Pulse signal is measured by CONSULT-III.

CAUTION:

Do not use ECM ground terminals when measuring input/output voltage. Doing so may result in damage to the ECM's transistor. Use a ground other than ECM terminals, such as the ground.

TERMINAL NO.	WIRE COLOR	ITEM	CONDITION	DATA (DC Voltage)
3	BR/W	A/F sensor 1 heater	**[Engine is running]** • **Warm-up condition** • Idle speed (More than 140 seconds after starting engine)	Approximately 2.9 - 8.8 V★ 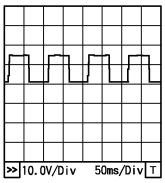 PBIA8148J
49	L/R	A/F sensor 1	**[Engine is running]** • **Warm-up condition** • Engine speed: 2,000 rpm	Approximately 1.8 V Output voltage varies with air fuel ratio.
53	L/G	A/F sensor 1	**[Ignition switch: ON]**	Approximately 2.2 V

★: Average voltage for pulse signal (Actual pulse signal can be confirmed by oscilloscope.)

Diagnosis Procedure

INFOID:0000000005285221

1. CHECK GROUND CONNECTIONS

1. Turn ignition switch OFF.
2. Loosen and retighten ground screws on the body.
   Refer to EC-711, "Ground Inspection".

- ⇦: Vehicle front
- Body ground (1)

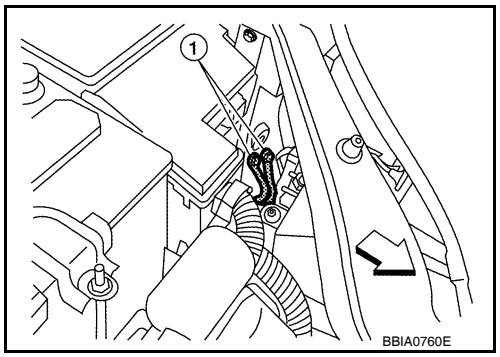

BBIA0760E

OK or NG

OK >> GO TO 2.
NG >> Repair or replace ground connections.

2. CHECK AIR FUEL RATIO (A/F) SENSOR 1 POWER SUPPLY CIRCUIT

1. Disconnect air fuel ratio (A/F) sensor 1 harness connector (1).
2. Turn ignition switch ON.

- Air fuel ratio (A/F) sensor 1 (2)

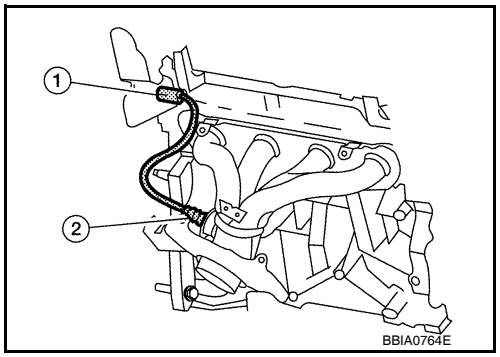

BBIA0764E

3. Check voltage between A/F sensor 1 terminal 4 and ground with CONSULT-III or tester.

Voltage: Battery voltage

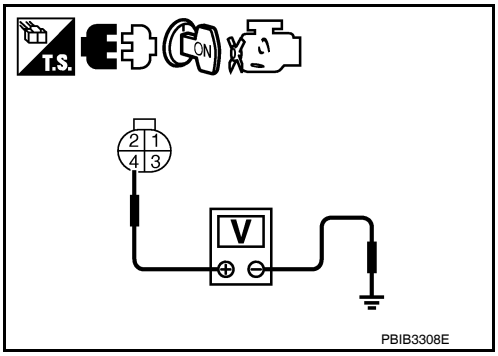

OK or NG

OK >> GO TO 4.
NG >> GO TO 3.

3. DETECT MALFUNCTIONING PART

Check the following.
- Harness connectors E3, F2
- 10 A fuse
- Harness for open or short between A/F sensor 1 and fuse

>> Repair or replace harness or connectors.

4. CHECK A/F SENSOR 1 HEATER OUTPUT SIGNAL CIRCUIT

1. Turn ignition switch OFF.
2. Disconnect ECM harness connector.
3. Check harness continuity between ECM terminal 8 and A/F sensor 1 terminal 3. Refer to Wiring Diagram.

Continuity should exist.

4. Also check harness for short to ground and short to power.

OK or NG

OK >> GO TO 5.
NG >> Repair open circuit or short to ground or short to power in harness or connectors.

5. CHECK A/F SENSOR 1 HEATER

Refer to EC-726, "Component Inspection".

OK or NG

OK >> GO TO 6.
NG >> Replace air fuel ratio (A/F) sensor 1.

6. CHECK INTERMITTENT INCIDENT

Perform EC-706.

>> **INSPECTION END**

Component Inspection

INFOID:0000000005285222

AIR FUEL RATIO (A/F) SENSOR 1 HEATER

1. Check resistance between A/F sensor 1 terminals as follows.

Terminal No.	Resistance
3 and 4	1.8 - 2.44 Ω [at 25°C (77°F)]
3 and 1, 2	∞ Ω (Continuity should not exist)
4 and 1, 2	

2. If NG, replace air fuel ratio (A/F) sensor 1.

CAUTION:

- **Discard any A/F sensor which has been dropped from a height of more than 0.5 m (19.7 in) onto a hard surface such as a concrete floor; use a new one.**
- **Before installing new A/F sensor, clean exhaust system threads using Heated Oxygen Sensor Thread Cleaner tool J-43897-18 or J-43897-12 and approved anti-seize lubricant.**

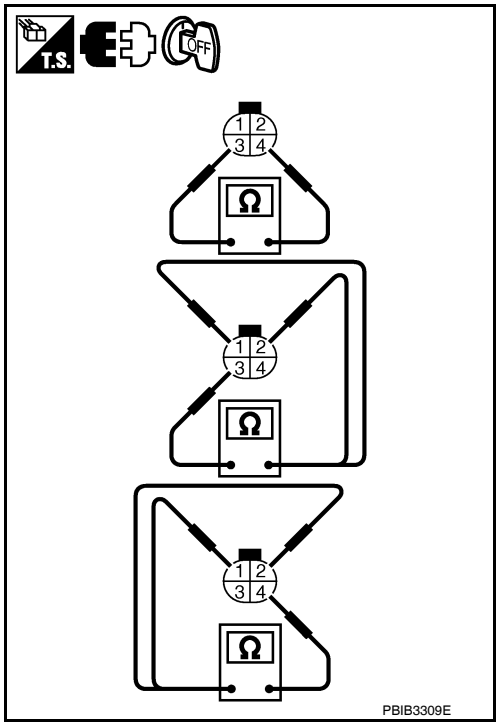

INFOID:0000000005285223

Removal and Installation

AIR FUEL RATIO SENSOR HEATER

Refer to EM-23.

DTC P0037, P0038 HO2S2 HEATER

Description

INFOID:0000000005285224

SYSTEM DESCRIPTION

Sensor	Input Signal to ECM	ECM Function	Actuator
Camshaft position sensor (PHASE)	Engine speed	Heated oxygen sensor 2 heater control	Heated oxygen sensor 2 heater
Crankshaft position sensor (POS)			
Engine coolant temperature sensor	Engine coolant temperature		
Mass air flow sensor	Amount of intake air		

The ECM performs ON/OFF control of the heated oxygen sensor 2 heater corresponding to the engine speed, amount of intake air and engine coolant temperature.

OPERATION

Engine speed rpm	Heated oxygen sensor 2 heater
Above 3,600 rpm	OFF
• Below 3,600 rpm after the following conditions are met. - Engine: After warming up - Keeping the engine speed between 3,500 and 4,000 rpm for 1 minute and at idle for 1 minute under no load	ON

CONSULT-III Reference Value in Data Monitor Mode

INFOID:0000000005285225

Specification data are reference values.

Monitor item	Condition	Specification
HO2S2 HTR (B1)	• Engine speed: Below 3,600 rpm after the following conditions are met - Engine: After warming up - Keeping the engine speed between 3,500 and 4,000 rpm for 1 minute and at idle for 1 minute under no load.	ON
	• Engine speed: Above 3,600 rpm	OFF

On Board Diagnosis Logic

INFOID:0000000005285226

DTC No.	Trouble diagnosis name	DTC detecting condition	Possible cause
P0037 0037	Heated oxygen sensor 2 heater control circuit low	The current amperage in the heated oxygen sensor 2 heater circuit is out of the normal range. (An excessively low voltage signal is sent to ECM through the heated oxygen sensor 2 heater.)	• Harness or connectors (Heated oxygen sensor 2 heater circuit is open or shorted.) • Heated oxygen sensor 2 heater
P0038 0038	Heated oxygen sensor 2 heater control circuit high	The current amperage in the heated oxygen sensor 2 heater circuit is out of the normal range. (An excessively high voltage signal is sent to ECM through the heated oxygen sensor 2 heater.)	• Harness or connectors (Heated oxygen sensor 2 heater circuit is shorted.) • Heated oxygen sensor 2 heater

DTC Confirmation Procedure

INFOID:0000000005285227

NOTE:
If DTC Confirmation Procedure has been previously conducted, always turn ignition switch OFF and wait at least 10 seconds before conducting the next test.
TESTING CONDITION:
Before performing the following procedure, confirm that battery voltage is between 11 V at idle.

WITH CONSULT-III

1. Turn ignition switch ON and select “DATA MONITOR” mode with CONSULT-III.
2. Start engine and warm it up to the normal operating temperature.
3. Turn ignition switch OFF and wait at least 10 seconds.
4. Start engine and keep the engine speed between 3,500 and 4,000 rpm for at least 1 minute under no load.
5. Let engine idle for 1 minute.
6. Check 1st trip DTC.
7. If 1st trip DTC is detected, go to EC-731, "Diagnosis Procedure".

WITH GST

Follow the procedure “WITH CONSULT-III” above.

Wiring Diagram

INFOID:0000000005285228

EC-HO2S2H-01

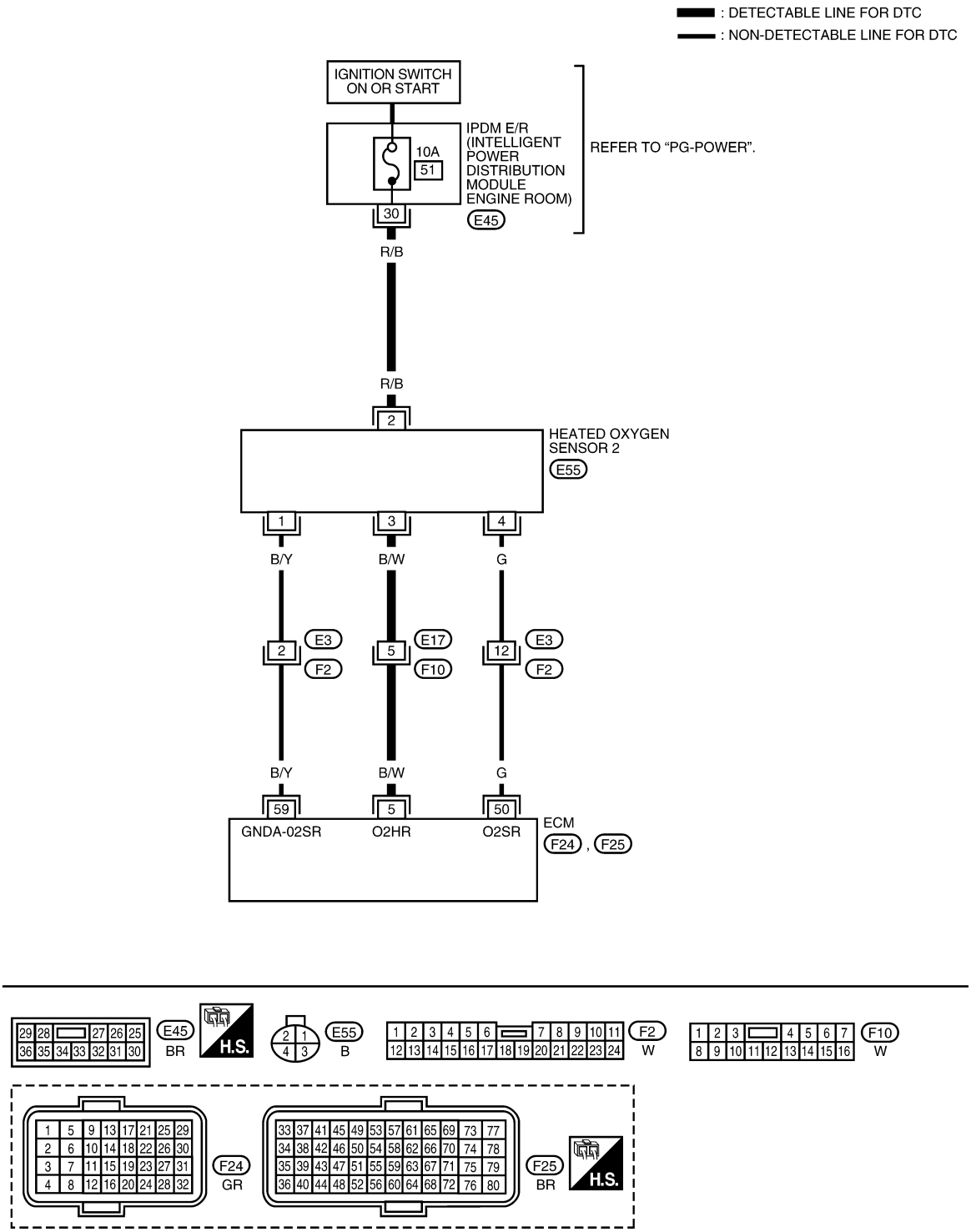

Specification data are reference values and are measured between each terminal and ground.
Pulse signal is measured by CONSULT-III.

CAUTION:

Do not use ECM ground terminals when measuring input/output voltage. Doing so may result in damage to the ECM's transistor. Use a ground other than ECM terminals, such as the ground.

TERMINAL NO.	WIRE COLOR	ITEM	CONDITION	DATA (DC Voltage)
5	B/W	Heated oxygen sensor 2 heater	**[Engine is running]** • Engine speed: Below 3,600 rpm after the following conditions are met. - Engine: After warming up - Keeping the engine speed between 3,500 and 4,000 rpm for 1 minute and at idle for 1 minute under no load.	Approximately 10 V★ 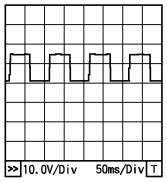 PBIA8148J
			[Ignition switch: ON] • Engine stopped **[Engine is running]** • Engine speed: Above 3,600 rpm.	BATTERY VOLTAGE (11 - 14 V)
50	G	Heated oxygen sensor 2	**[Engine is running]** • Revving engine from idle to 3,000 rpm quickly after the following conditions are met. - Engine: After warming up - Keeping the engine speed between 3,500 and 4,000 rpm for 1 minute and at idle for 1 minute under no load.	0 - Approximately 1.0 V
59	B/Y	Sensor ground (Heated oxygen sensor 2)	**[Engine is running]** • **Warm-up condition** • Idle speed	Approximately 0 V

★: Average voltage for pulse signal (Actual pulse signal can be confirmed by oscilloscope.)

Diagnosis Procedure

INFOID:0000000005285229

1. CHECK GROUND CONNECTIONS

1. Turn ignition switch OFF.
2. Loosen and retighten ground screw on the body.
   Refer to EC-711, "Ground Inspection".

- ⇦ : Vehicle front
- Body ground (1)

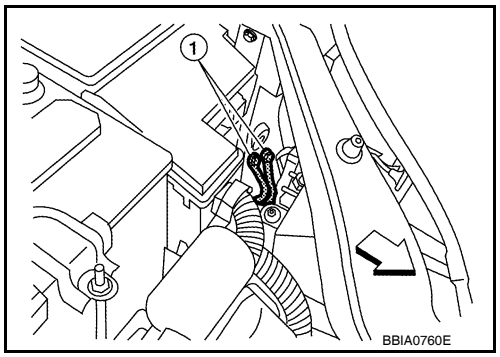

OK or NG

OK >> GO TO 2.
NG >> Repair or replace ground connections.

2. CHECK HO2S2 POWER SUPPLY CIRCUIT

1. Disconnect heated oxygen sensor 2 harness connector (2).

- ⇦ : Vehicle front
- Heated oxygen sensor 2 (1)

2. Turn ignition switch ON.

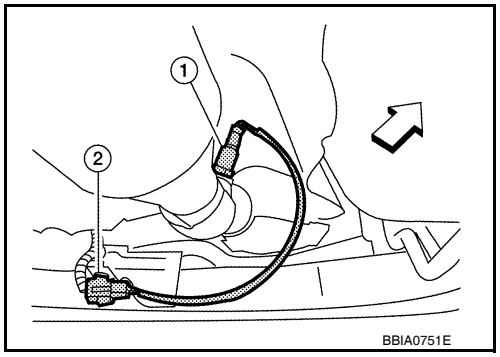

3. Check voltage between HO2S2 terminal 2 and ground with CONSULT-III or tester.

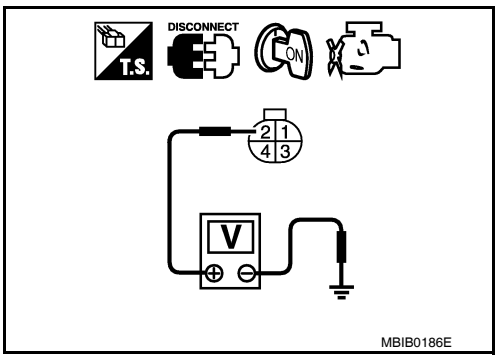

Voltage: Battery voltage

OK or NG

OK >> GO TO 4.
NG >> GO TO 3.

3. DETECT MALFUNCTIONING PART

Check the following.
- 10 A fuse
- Harness for open or short between heated oxygen sensor 2 and fuse

>> Repair open circuit or short to ground or short to power in harness or connectors.

4. CHECK HO2S2 OUTPUT SIGNAL CIRCUIT FOR OPEN AND SHORT

1. Turn ignition switch OFF.
2. Disconnect ECM harness connector.
3. Check harness continuity between ECM terminal 5 and HO2S2 terminal 3. Refer to Wiring Diagram.

Continuity should exist.

4. Also check harness for short to ground and short to power.

OK or NG

OK >> GO TO 6.
NG >> GO TO 5.

5. DETECT MALFUNCTIONING PART

Check the following.
- Harness connectors E17, F10
- Harness for open or short between heated oxygen sensor 2 and ECM

>> Repair open circuit or short to ground or short to power in harness or connectors.

6. CHECK HEATED OXYGEN SENSOR 2 HEATER

Refer to EC-732, "Component Inspection".

OK or NG

OK >> GO TO 7.
NG >> Replace heated oxygen sensor 2.

7. CHECK INTERMITTENT INCIDENT

Refer to EC-706.

>> **INSPECTION END**

Component Inspection

INFOID:0000000005285230

HEATED OXYGEN SENSOR 2 HEATER

1. Check resistance between HO2S2 terminals as follows.

Terminal No.	Resistance
2 and 3	3.4 - 4.4 Ω [at 25°C (77°F)]
1 and 2, 3, 4	∞ Ω (Continuity should not exist)
4 and 1, 2, 3	

2. If NG, replace heated oxygen sensor 2.

CAUTION:

- **Discard any heated oxygen sensor which has been dropped from a height of more than 0.5 m (19.7 in) onto a hard surface such as a concrete floor; use a new one.**
- **Before installing new oxygen sensor, clean exhaust system threads using Oxygen Sensor Thread Cleaner tool J-43897-18 or J-43897-12 and approved anti-seize lubricant.**

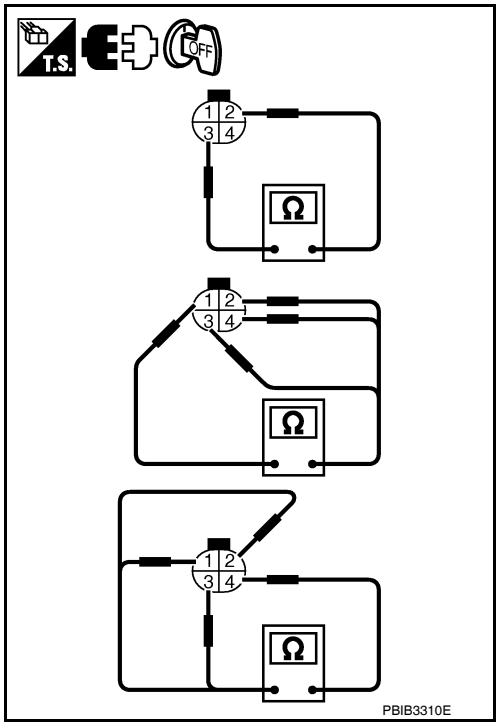

INFOID:0000000005285231

Removal and Installation

HEATED OXYGEN SENSOR 2

Refer to EM-23.

DTC P0075 IVT CONTROL SOLENOID VALVE

Component Description

INFOID:0000000005285232

Intake valve timing control solenoid valve is activated by ON/OFF pulse duty (ratio) signals from the ECM.
The intake valve timing control solenoid valve changes the oil amount and direction of flow through intake valve timing control unit or stops oil flow.
The longer pulse width advances valve angle.
The shorter pulse width retards valve angle.
When ON and OFF pulse widths become equal, the solenoid valve stops oil pressure flow to fix the intake valve angle at the control position.

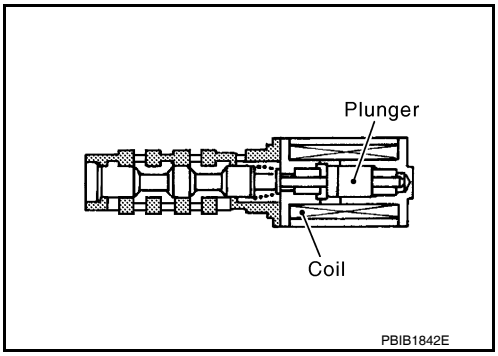

CONSULT-III Reference Value in Data Monitor Mode

INFOID:0000000005285233

Specification data are reference values.

Monitor item	Condition		Specification
INT/V SOL (B1)	• Engine: After warming up • Air conditioner switch: OFF • Shift lever: P or N (CVT), Neutral (M/T) • No load	Idle	0% - 2%
		When revving engine up to 2,000 rpm quickly	Approx. 0% - 90%

On Board Diagnosis Logic

INFOID:0000000005285234

DTC No.	Trouble diagnosis name	DTC detecting condition	Possible cause
P0075 0075	Intake valve timing control solenoid valve circuit	An improper voltage is sent to the ECM through intake valve timing control solenoid valve.	• Harness or connectors (Intake valve timing control solenoid valve circuit is open or shorted.) • Intake valve timing control solenoid valve

DTC Confirmation Procedure

INFOID:0000000005285235

NOTE:
If DTC Confirmation Procedure has been previously conducted, always turn ignition switch OFF and wait at least 10 seconds before conducting the next test.

1. Start engine and let it idle for 5 seconds.
2. Check 1st trip DTC.
3. If 1st trip DTC is detected, go to EC-736, "Diagnosis Procedure".

Wiring Diagram

INFOID:0000000005285236

EC-IVC-01

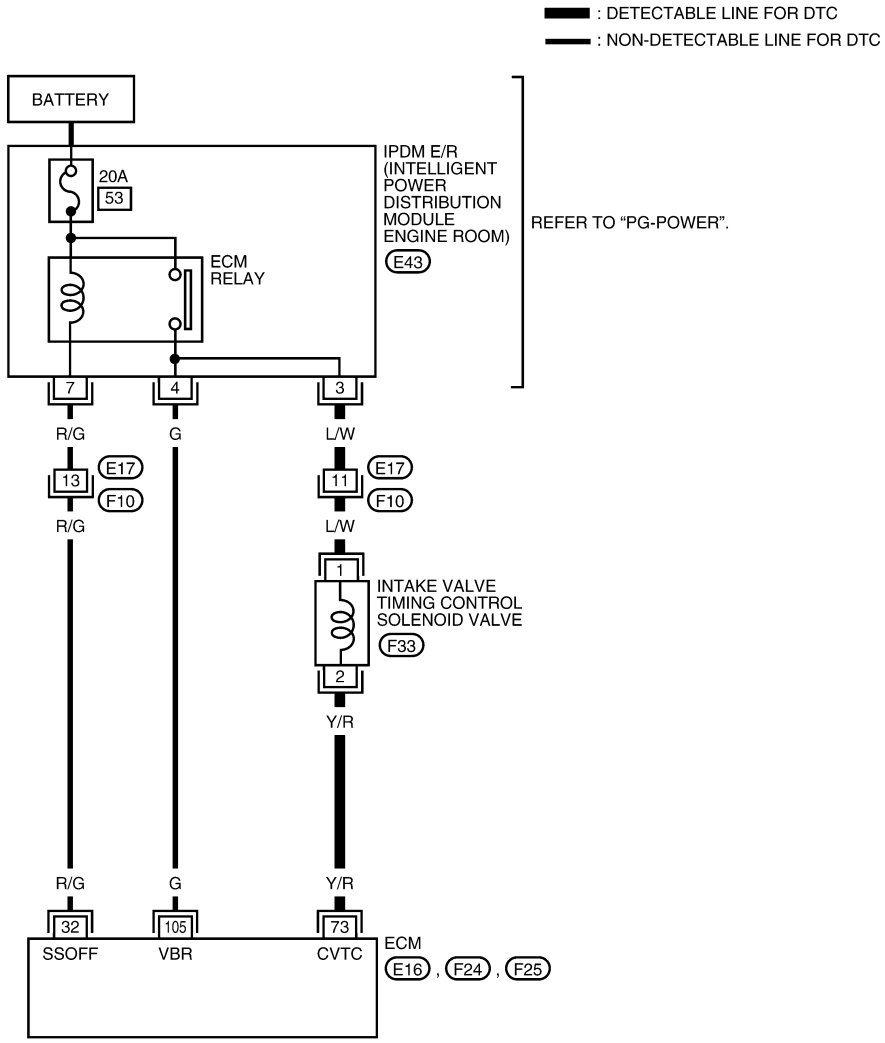

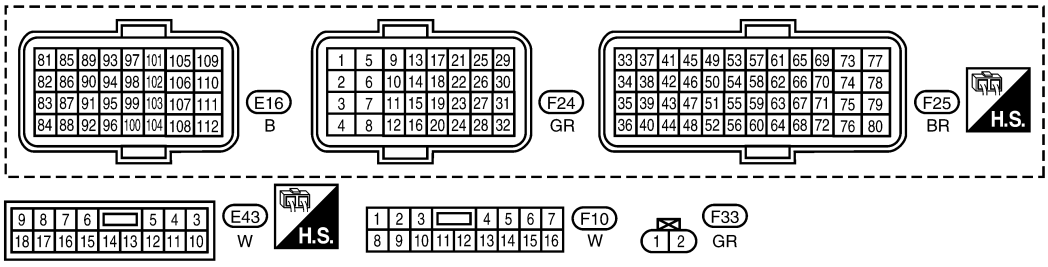

AABWA0234GB

Specification data are reference values and are measured between each terminal and ground.
Pulse signal is measured by CONSULT-III.

CAUTION:

Do not use ECM ground terminals when measuring input/output voltage. Doing so may result in damage to the ECM's transistor. Use a ground other than ECM terminals, such as the ground.

TERMINAL NO.	WIRE COLOR	ITEM	CONDITION	DATA (DC Voltage)
32	R/G	ECM relay (Self shut-off)	**[Engine is running]** **[Ignition switch: OFF]** • For a few seconds after turning ignition switch OFF	0 - 1.0 V
			[Ignition switch: OFF] • More than a few seconds after turning ignition switch OFF	BATTERY VOLTAGE (11 - 14 V)
73	Y/R	Intake valve timing control solenoid valve	**[Engine is running]** • **Warm-up condition** • Idle speed	BATTERY VOLTAGE (11 - 14 V)
			[Engine is running] • **Warm-up condition** • When revving engine up to 2,000 rpm quickly	7 - 10 V★ 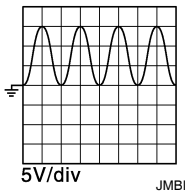
105	G	Power supply for ECM	**[Ignition switch: ON]**	BATTERY VOLTAGE (11 - 14 V)

★: Average voltage for pulse signal (Actual pulse signal can be confirmed by oscilloscope.)

Diagnosis Procedure

INFOID:0000000005285237

1. CHECK INTAKE VALVE TIMING CONTROL SOLENOID VALVE POWER SUPPLY CIRCUIT

1. Turn ignition switch OFF.
2. Disconnect intake valve timing control solenoid valve (1) harness connector.
3. Turn ignition switch ON.

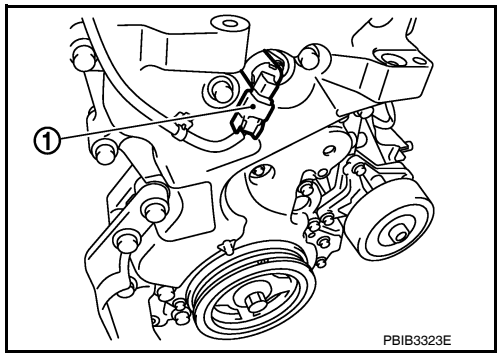

4. Check voltage between intake valve timing control solenoid valve terminal 1 and ground with CONSULT-III or tester.

Voltage: Battery voltage

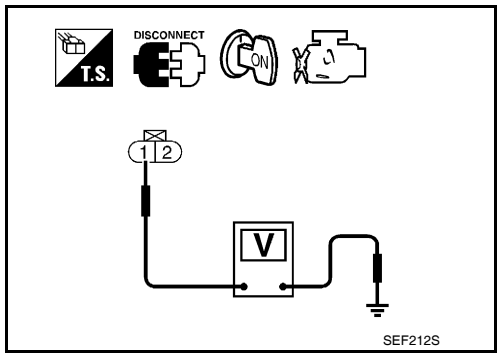

OK or NG

OK >> GO TO 3.
NG >> GO TO 2.

2. DETECT MALFUNCTION PART

Check the following.

- Harness connectors E17, F10
- Harness for open or short between intake valve timing control solenoid valve and IPDM E/R

>> Repair or replace harness or connectors.

3. CHECK INTAKE VALVE TIMING CONTROL SOLENOID VALVE OUTPUT SIGNAL CIRCUIT FOR OPEN AND SHORT

1. Turn ignition switch OFF.
2. Disconnect ECM harness connector.
3. Check harness continuity between ECM terminal 73 and intake valve timing control solenoid valve terminal 2. Refer to Wiring Diagram.

Continuity should exist.

4. Also check harness for short to ground and short to power.

OK or NG

OK >> GO TO 4.
NG >> Repair open circuit or short to ground or short to power in harness or connectors.

4. CHECK INTAKE VALVE TIMING CONTROL SOLENOID VALVE

Refer to EC-737, "Component Inspection".

OK or NG

OK >> GO TO 5.
NG >> Replace intake valve timing control solenoid valve.

5. CHECK INTERMITTENT INCIDENT

Refer to EC-706.

>> **INSPECTION END**

Component Inspection

INFOID:0000000005285238

INTAKE VALVE TIMING CONTROL SOLENOID VALVE

1. Disconnect intake valve timing control solenoid valve harness connector.
2. Check resistance between intake valve timing control solenoid valve as follows.

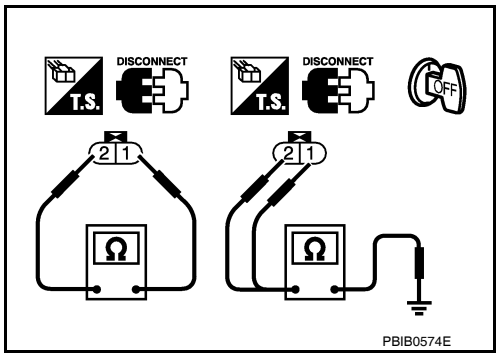

Terminal	Resistance
1 and 2	6.7 - 7.7 Ω [at 20°C (68°F)]
1 or 2 and ground	∞Ω (Continuity should not exist.)

If NG, replace intake valve timing control solenoid valve.
If OK, go to next step.

3. Remove intake valve timing control solenoid valve.
4. Provide 12 V DC between intake valve timing control solenoid valve terminals and then interrupt it. Make sure that the plunger moves as shown in the figure.

CAUTION:
Do not apply 12 V DC continuously for 5 seconds or more. Doing so may result in damage to the coil in intake valve timing control solenoid valve.
If NG, replace intake valve timing control solenoid valve.
NOTE:
Always replace O-ring when intake valve timing control solenoid valve is removed.

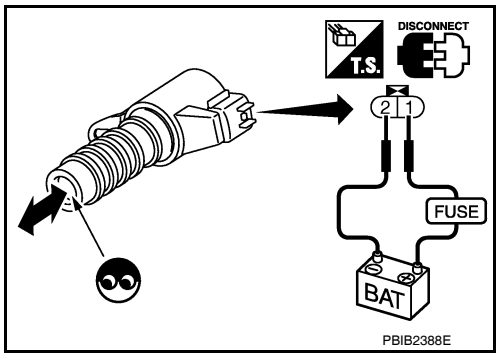

Removal and Installation

INFOID:0000000005285239

INTAKE VALVE TIMING CONTROL SOLENOID VALVE

Refer to EM-40.

DTC P0101 MAF SENSOR

Component Description

INFOID:0000000005285240

The mass air flow sensor (1) is placed in the stream of intake air. It measures the intake flow rate by measuring a part of the entire intake flow. The mass air flow sensor controls the temperature of the hot wire to a certain amount. The heat generated by the hot wire is reduced as the intake air flows around it. The more air, the greater the heat loss.
Therefore, the electric current supplied to hot wire is changed to maintain the temperature of the hot wire as air flow increases. The ECM detects the air flow by means of this current change.

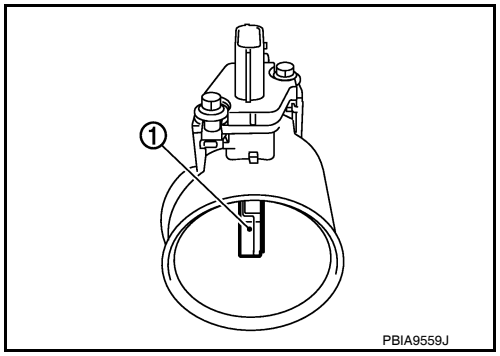

CONSULT-III Reference Value in Data Monitor Mode

INFOID:0000000005285241

Specification data are reference values.

Monitor item	Condition		Specification
MAS A/F SE-B1	• See EC-698.		
CAL/LD VALUE	• Engine: After warming up • Shift lever: P or N (CVT), Neutral (M/T) • Air conditioner switch: OFF • No load	Idle	10% - 35%
		2,500 rpm	10% - 35%
MASS AIRFLOW	• Engine: After warming up • Shift lever: P or N (CVT), Neutral (M/T) • Air conditioner switch: OFF • No load	Idle	1.0 - 4.0 g·m/s
		2,500 rpm	4.0 - 10.0 g·m/s

On Board Diagnosis Logic

INFOID:0000000005285242

DTC No.	Trouble diagnosis name	DTC detecting condition		Possible cause
P0101 0101	Mass air flow sensor circuit range/performance	A)	A high voltage from the sensor is sent to ECM under light load driving condition.	• Harness or connectors (Mass air flow sensor circuit is open or shorted.) • Mass air flow sensor • EVAP control system pressure sensor • Intake air temperature sensor
		B)	A low voltage from the sensor is sent to ECM under heavy load driving condition.	• Harness or connectors (Mass air flow sensor circuit is open or shorted.) • Intake air leaks • Mass air flow sensor • EVAP control system pressure sensor • Intake air temperature sensor

DTC Confirmation Procedure

INFOID:0000000005285243

Perform PROCEDURE FOR MALFUNCTION A first.
If the DTC cannot be confirmed, perform PROCEDURE FOR MALFUNCTION B.
NOTE:
If DTC Confirmation Procedure has been previously conducted, always turn ignition switch OFF and wait at least 10 seconds before conducting the next test.

PROCEDURE FOR MALFUNCTION A

NOTE:

If engine will not start or stops soon, wait at least 10 seconds with engine stopped (Ignition switch ON) instead of running engine at idle speed.

1. Start engine and warm it up to normal operating temperature.
2. Run engine for at least 10 seconds at idle speed.
3. Check 1st trip DTC.
4. If 1st trip DTC is detected, go to EC-743, "Diagnosis Procedure".

PROCEDURE FOR MALFUNCTION B

CAUTION:

Always drive vehicle at a safe speed.

WITH CONSULT-III

1. Turn ignition switch ON.
2. Start engine and warm it up to normal operating temperature.
   If engine cannot be started, go to EC-743, "Diagnosis Procedure".
3. Select “DATA MONITOR” mode with CONSULT-III.
4. Check the voltage of “MAS A/F SE-B1” with “DATA MONITOR”.
5. Increases engine speed to about 4,000 rpm.
6. Monitor the linear voltage rise in response to engine speed increases.
   If NG, go to EC-743, "Diagnosis Procedure".
   If OK, go to following step.

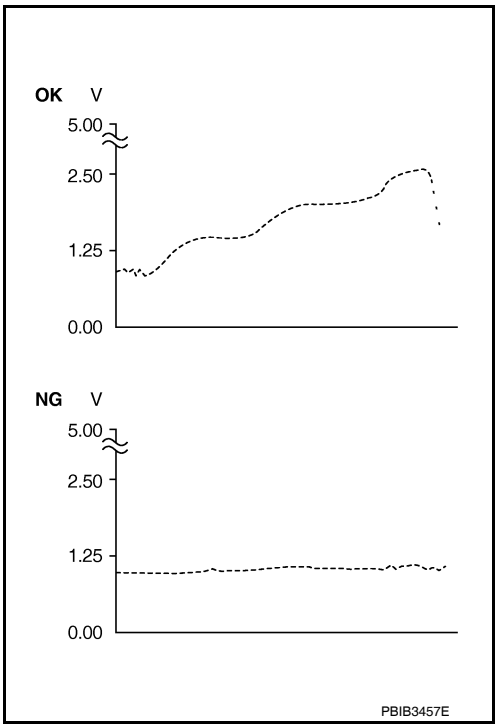

7. Maintain the following conditions for at least 10 consecutive seconds.

ENG SPEED	More than 2,000 rpm
TP SEN 1-B1	More than 1.5 V
TP SEN 2-B1	More than 1.5 V
Shift lever	Suitable position
Driving location	Driving vehicle uphill (Increased engine load) will help maintain the driving conditions required for this test.

8. Check 1st trip DTC.
9. If 1st trip DTC is detected, go to EC-743, "Diagnosis Procedure".

Overall Function Check

INFOID:0000000005285244

PROCEDURE FOR MALFUNCTION B

Use this procedure to check the overall function of the mass air flow sensor circuit. During this check, a 1st DTC might not be confirmed.

WITH GST

1. Start engine and warm it up to normal operating temperature.

2. Select Service $01 with GST.
3. Check the mass air flow sensor signal with Service $01.
4. Check for linear mass air flow sensor signal value rise in response to increases to about 4,000 rpm in engine speed.
5. If NG, go to EC-743, "Diagnosis Procedure".

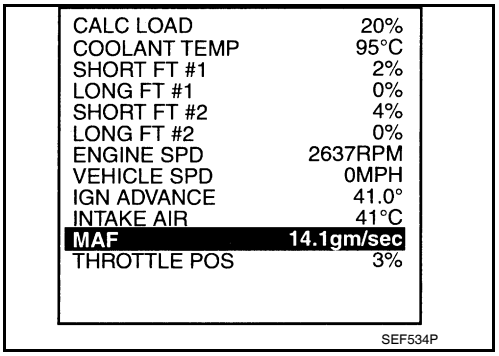

Wiring Diagram

INFOID:0000000005285245

EC-MAFS-01

: DETECTABLE LINE FOR DTC
: NON-DETECTABLE LINE FOR DTC

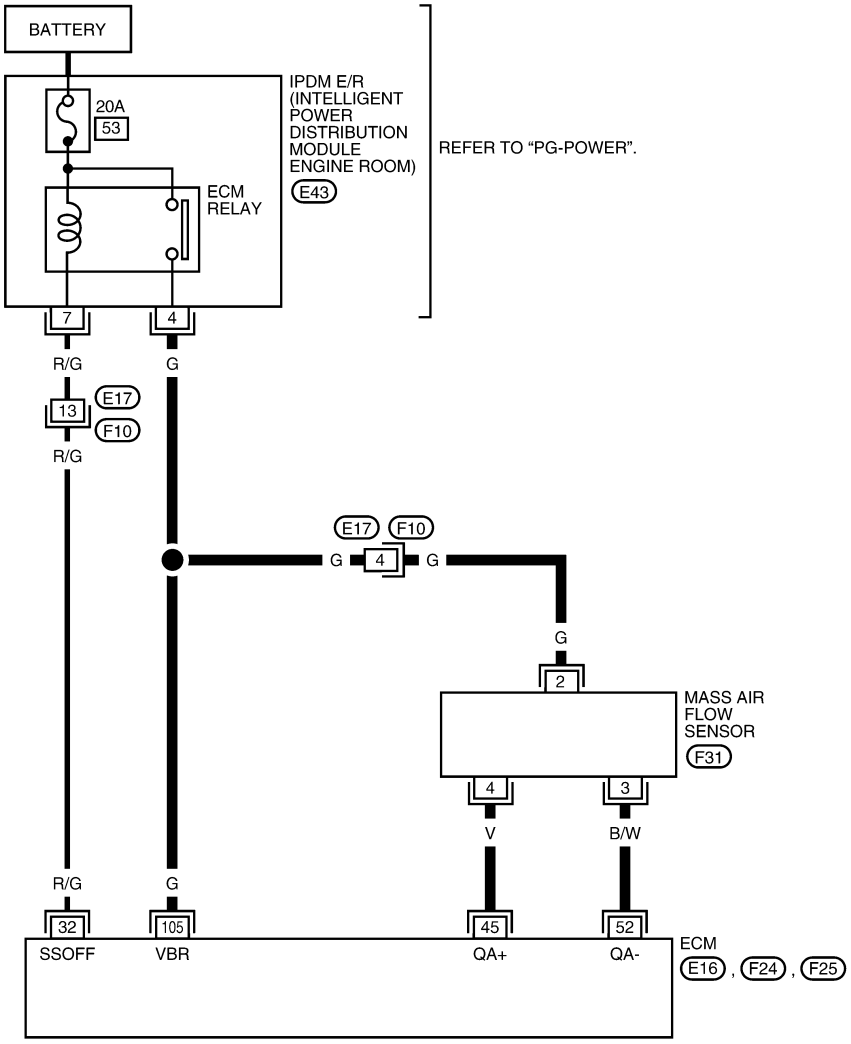

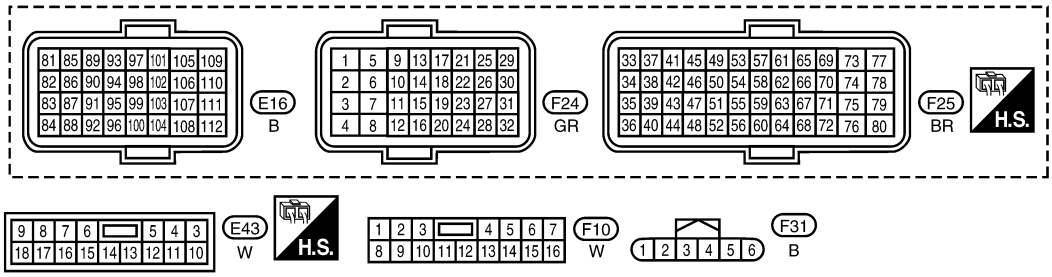

AABWA0239GB

Specification data are reference values and are measured between each terminal and ground.

CAUTION:

Do not use ECM ground terminals when measuring input/output voltage. Doing so may result in damage to the ECM's transistor. Use a ground other than ECM terminals, such as the ground.

TERMINAL NO.	WIRE COLOR	ITEM	CONDITION	DATA (DC Voltage)
32	R/G	ECM relay (Self shut-off)	**[Engine is running]** **[Ignition switch: OFF]** • For a few seconds after turning ignition switch OFF	0 - 1.0 V
			[Ignition switch: OFF] • More than a few seconds after turning ignition switch OFF	BATTERY VOLTAGE (11 - 14 V)
45	V	Mass air flow sensor	**[Engine is running]** • **Warm-up condition** • Idle speed	0.9 - 1.2 V
			[Engine is running] • **Warm-up condition** • Engine speed: 2,500 rpm	1.5 - 1.8 V
52	B/W	Sensor ground (Mass air flow sensor)	**[Engine is running]** • **Warm-up condition** • Idle speed	Approximately 0 V
105	G	Power supply for ECM	**[Ignition switch: ON]**	BATTERY VOLTAGE (11 - 14 V)

Diagnosis Procedure

INFOID:0000000005285246

1. INSPECTION START

Which malfunction (A or B) is duplicated?

A or B

A >> GO TO 3.
B >> GO TO 2.

2. CHECK INTAKE AIR LEAK

Check the following for connections.
- Air duct
- Vacuum hoses
- Intake air passage between air duct and intake manifold

OK or NG

OK >> GO TO 3.
NG >> Reconnect the parts.

3. CHECK GROUND CONNECTIONS

1. Turn ignition switch OFF.
2. Loosen and retighten ground screw on the body. Refer to EC-711, "Ground Inspection".

- ⇦ : Vehicle front
- Body ground (1)

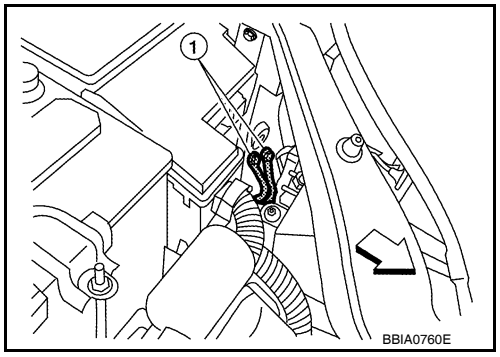

OK or NG

OK >> GO TO 4.
NG >> Repair or replace ground connections.

4. CHECK MAF SENSOR POWER SUPPLY CIRCUIT

1. Disconnect mass air flow (MAF) sensor (1) harness connector.
2. Turn ignition switch ON.

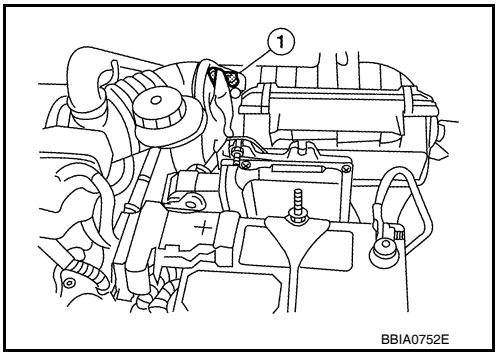

3. Check voltage between MAF sensor terminal 2 and ground with CONSULT-III or tester.

Voltage: Battery voltage

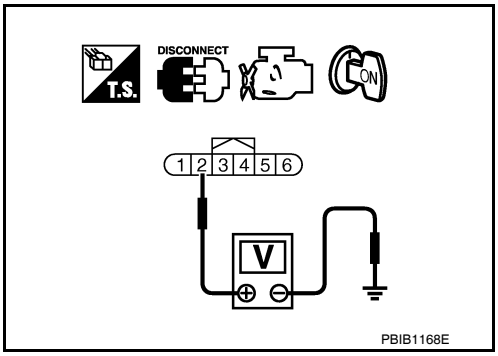

OK or NG

OK >> GO TO 6.
NG >> GO TO 5.

5. DETECT MALFUNCTIONING PART

Check the following.
- Harness connectors E17, F10
- Harness for open or short between mass air flow sensor and IPDM E/R
- Harness for open or short between mass air flow sensor and ECM

>> Repair open circuit or short to ground or short to power in harness or connectors.

6. CHECK MAF SENSOR GROUND CIRCUIT FOR OPEN AND SHORT

1. Turn ignition switch OFF.
2. Disconnect ECM harness connector.
3. Check harness continuity between MAF sensor terminal 3 and ECM terminal 52. Refer to Wiring Diagram.

Continuity should exist.

4. Also check harness for short to ground and short to power.

OK or NG

OK >> GO TO 7.
NG >> Repair open circuit or short to ground or short to power in harness or connectors.

7. CHECK MAF SENSOR INPUT SIGNAL CIRCUIT FOR OPEN AND SHORT

1. Check harness continuity between MAF sensor terminal 4 and ECM terminal 45. Refer to Wiring Diagram.

Continuity should exist.

2. Also check harness for short to ground and short to power.

OK or NG

OK >> GO TO 8.
NG >> Repair open circuit or short to ground or short or short to power in harness or connectors.

8. CHECK INTAKE AIR TEMPERATURE SENSOR

Refer to EC-775, "Component Inspection".

OK or NG

OK >> GO TO 9.
NG >> Replace mas air flow sensor (with intake air temperature sensor).

9. CHECK EVAP CONTROL SYSTEM PRESSURE SENSOR

Refer to EC-927, "Component Inspection".

OK or NG

OK >> GO TO 10.
NG >> Replace EVAP control system pressure sensor.

10. CHECK MASS AIR FLOW SENSOR

Refer to EC-745, "Component Inspection".

OK or NG

OK >> GO TO 11.
NG >> Replace mass air flow sensor.

11. CHECK INTERMITTENT INCIDENT

Perform EC-706.

>> **INSPECTION END**

Component Inspection

INFOID:0000000005285247

MASS AIR FLOW SENSOR

WITH CONSULT-III

1. Reconnect all harness connectors disconnected.
2. Start engine and warm it up to normal operating temperature.
3. Connect CONSULT-III and select “DATA MONITOR” mode.
4. Select “MAS A/F SE-B1” and check indication under the following conditions.

Condition	MAS A/F SE-B1 (V)
Ignition switch ON (Engine stopped.)	Approx 0.4
Idle (Engine is warmed-up to normal operating temperature.)	0.9 - 1.2
2,500 rpm (Engine is warmed-up to normal operating temperature.)	1.5 - 1.8
Idle to about 4,000 rpm	0.9 - 1.2 to 2.4*

*: Check for linear voltage rise in response to engine being increased to about 4,000 rpm.

5. If the voltage is out of specification, proceed the following.

a. Check for the cause of uneven air flow through mass air flow sensor. Refer to following.
   - Crushed air ducts
   - Malfunctioning seal of air cleaner element
   - Uneven dirt of air cleaner element
   - Improper specification of intake air system parts

b. If NG, repair or replace malfunctioning part and perform step 2 to 4 again.
   If OK, go to next step.

6. Turn ignition switch OFF.
7. Disconnect mass air flow sensor harness connector and reconnect it again.
8. Perform step 2 to 4 again.
9. If NG, clean or replace mass air flow sensor.

WITHOUT CONSULT-III

1. Reconnect all harness connectors disconnected.
2. Start engine and warm it up to normal operating temperature.

3. Check voltage between ECM terminal 45 (Mass air flow sensor signal) and ground.

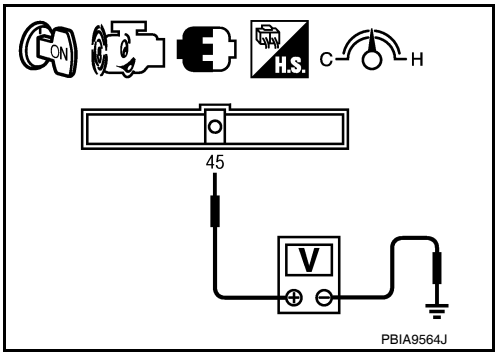

Condition	Voltage (V)
Ignition switch ON (Engine stopped.)	Approx 0.4
Idle (Engine is warmed-up to normal operating temperature.)	0.9 - 1.2
2,500 rpm (Engine is warmed-up to normal operating temperature.)	1.5 - 1.8
Idle to about 4,000 rpm	0.9 - 1.2 to 2.4*

*: Check for linear voltage rise in response to engine being increased to about 4,000 rpm.

4. If the voltage is out of specification, proceed the following.

a. Check for the cause of uneven air flow through mass air flow sensor. Refer to following.
   - Crushed air ducts
   - Malfunctioning seal of air cleaner element
   - Uneven dirt of air cleaner element
   - Improper specification of intake air system parts

b. If NG, repair or replace malfunctioning part and perform step 2 and 3 again.
   If OK, go to next step.

5. Turn ignition switch OFF.
6. Disconnect mass air flow sensor harness connector and reconnect it again.
7. Perform step 2 and 3 again.
8. If NG, clean or replace mass air flow sensor.

Removal and Installation

INFOID:0000000005285248

MASS AIR FLOW SENSOR

Refer to EM-16.

DTC P0102, P0103 MAF SENSOR

Component Description

INFOID:0000000005285249

The mass air flow sensor (1) is placed in the stream of intake air. It measures the intake flow rate by measuring a part of the entire intake flow. The mass air flow sensor controls the temperature of the hot wire to a certain amount. The heat generated by the hot wire is reduced as the intake air flows around it. The more air, the greater the heat loss.
Therefore, the electric current supplied to hot wire is changed to maintain the temperature of the hot wire as air flow increases. The ECM detects the air flow by means of this current change.

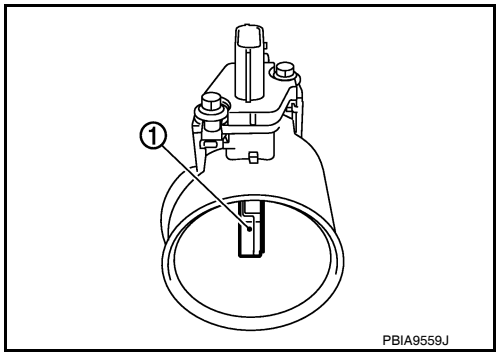

CONSULT-III Reference Value in Data Monitor Mode

INFOID:0000000005285250

Specification data are reference values.

Monitor item	Condition		Specification
MAS A/F SE-B1	See EC-698.		
CAL/LD VALUE	• Engine: After warming up • Shift lever: P or N (CVT), Neutral (M/T) • Air conditioner switch: OFF • No load	Idle	10% - 35%
		2,500 rpm	10% - 35%
MASS AIRFLOW	• Engine: After warming up • Shift lever: P or N (CVT), Neutral (M/T) • Air conditioner switch: OFF • No load	Idle	1.0 - 4.0 g·m/s
		2,500 rpm	4.0 - 10.0 g·m/s

On Board Diagnosis Logic

INFOID:0000000005285251

These self-diagnoses have the one trip detection logic.

DTC No.	Trouble diagnosis name	DTC detecting condition	Possible cause
P0102 0102	Mass air flow sensor circuit low input	An excessively low voltage from the sensor is sent to ECM.	• Harness or connectors (Mass air flow sensor circuit is open or shorted.) • Intake air leaks • Mass air flow sensor
P0103 0103	Mass air flow sensor circuit high input	An excessively high voltage from the sensor is sent to ECM.	• Harness or connectors (Mass air flow sensor circuit is open or shorted.) • Mass air flow sensor

FAIL-SAFE MODE

When the malfunction is detected, the ECM enters fail-safe mode and the MIL lights up.

Detected items	Engine operating condition in fail-safe mode
Mass air flow sensor circuit	Engine speed will not rise more than 2,400 rpm due to the fuel cut.

DTC Confirmation Procedure

INFOID:0000000005285252

NOTE:
If DTC Confirmation Procedure has been previously conducted, always turn ignition switch OFF and wait at least 10 seconds before conducting the next test.

PROCEDURE FOR DTC P0102

1. Start engine and wait at least 5 seconds.
2. Check DTC.
3. If DTC is detected, go to EC-750, "Diagnosis Procedure".

PROCEDURE FOR DTC P0103

1. Turn ignition switch ON and wait at least 5 seconds.
2. Check DTC.
3. If DTC is detected, go to EC-750, "Diagnosis Procedure".
   If DTC is not detected, go to next step.
4. Start engine and wait at least 5 seconds
5. Check DTC.
6. If DTC is detected, go to EC-750, "Diagnosis Procedure".

Wiring Diagram

INFOID:0000000005285253

EC-MAFS-01

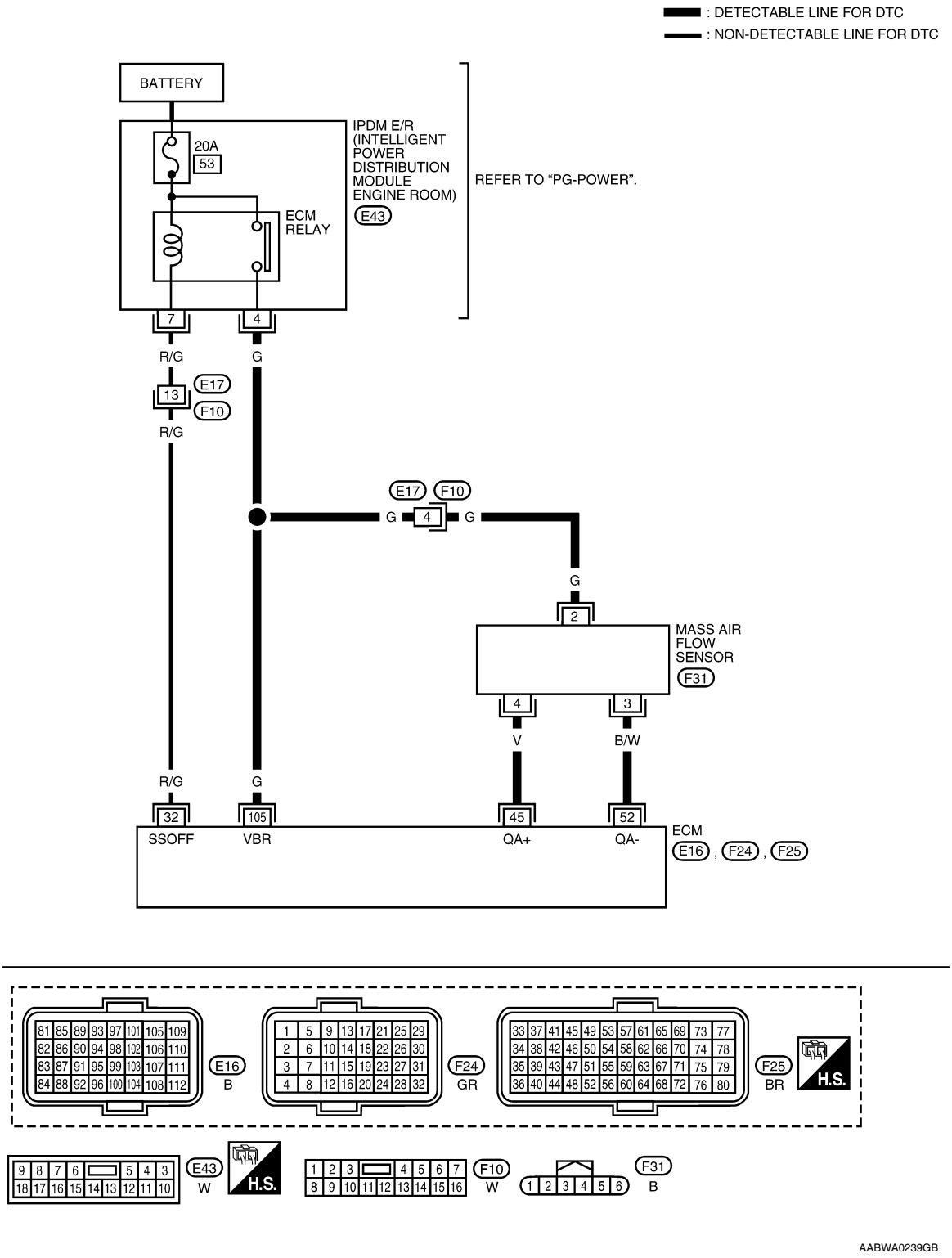

Specification data are reference values and are measured between each terminal and ground.

CAUTION:

Do not use ECM ground terminals when measuring input/output voltage. Doing so may result in damage to the ECM's transistor. Use a ground other than ECM terminals, such as the ground.

TERMINAL NO.	WIRE COLOR	ITEM	CONDITION	DATA (DC Voltage)
32	R/G	ECM relay (Self shut-off)	**[Engine is running]** **[Ignition switch: OFF]** • For a few seconds after turning ignition switch OFF	0 - 1.0 V
			[Ignition switch: OFF] • More than a few seconds after turning ignition switch OFF	BATTERY VOLTAGE (11 - 14 V)
45	V	Mass air flow sensor	**[Engine is running]** • **Warm-up condition** • Idle speed	0.9 - 1.2 V
			[Engine is running] • **Warm-up condition** • Engine speed: 2,500 rpm	1.5 - 1.8 V
52	B/W	Sensor ground (Mass air flow sensor)	**[Engine is running]** • **Warm-up condition** • Idle speed	Approximately 0 V
105	G	Power supply for ECM	**[Ignition switch: ON]**	BATTERY VOLTAGE (11 - 14 V)

Diagnosis Procedure

INFOID:0000000005285254

1. INSPECTION START

Which malfunction (P0102 or P0103) is duplicated?

P0102 or P0103

P0102 >> GO TO 2.
P0103 >> GO TO 3.

2. CHECK INTAKE SYSTEM

Check the following for connection.
- Air duct
- Vacuum hoses
- Intake air passage between air duct and intake manifold

OK or NG

OK >> GO TO 3.
NG >> Reconnect the parts.

3. CHECK GROUND CONNECTIONS

1. Turn ignition switch OFF.
2. Loosen and retighten ground screws on the body. Refer to EC-711, "Ground Inspection".

- ⇦ : Vehicle front
- Body ground (1)

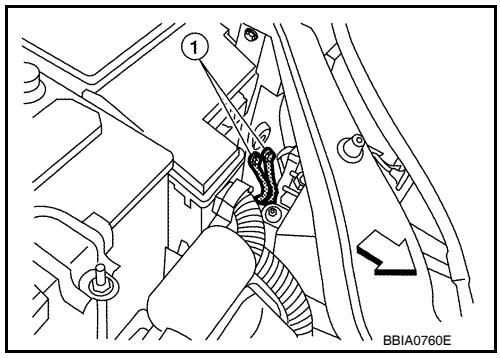

OK or NG

OK >> GO TO 4.
NG >> Repair or replace ground connections.

4. CHECK MAF SENSOR POWER SUPPLY CIRCUIT

1. Disconnect mass air flow (MAF) sensor (1) harness connector.
2. Turn ignition switch ON.

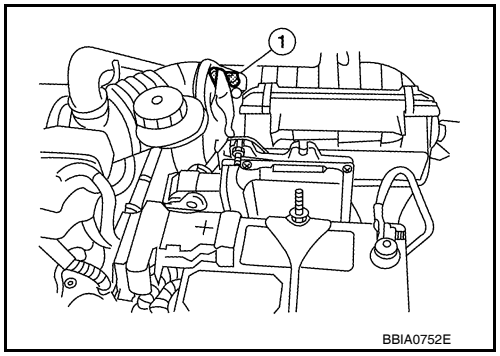

3. Check voltage between MAF sensor terminal 2 and ground with CONSULT-III or tester.

Voltage: Battery voltage

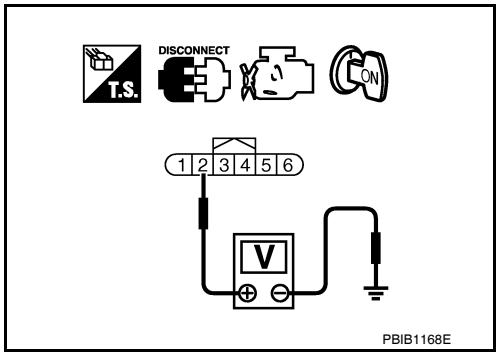

OK or NG

OK >> GO TO 6.
NG >> GO TO 5.

5. DETECT MALFUNCTIONING PART

Check the following.
- Harness connectors E17, F10
- Harness for open or short between mass air flow sensor and ECM
- Harness for open or short between mass air flow sensor and IPDM E/R

>> Repair open circuit or short to ground or short to power in harness or connectors.

6. CHECK MAF SENSOR GROUND CIRCUIT FOR OPEN AND SHORT

1. Turn ignition switch OFF.
2. Disconnect ECM harness connector.
3. Check harness continuity between MAF sensor terminal 3 and ECM terminal 52. Refer to Wiring Diagram.

Continuity should exist.

4. Also check harness for short to ground and short to power.

OK or NG

OK >> GO TO 7.
NG >> Repair open circuit or short to ground or short to power in harness or connectors.

7. CHECK MAF SENSOR INPUT SIGNAL CIRCUIT FOR OPEN AND SHORT

1. Check harness continuity between MAF sensor terminal 4 and ECM terminal 45. Refer to Wiring Diagram.

Continuity should exist.

2. Also check harness for short to ground and short to power.

OK or NG

OK >> GO TO 8.
NG >> Repair open circuit or short to ground or short to power in harness or connectors.

8. CHECK MASS AIR FLOW SENSOR

Refer to EC-752, "Component Inspection".

OK or NG

OK >> GO TO 9.
NG >> Replace mass air flow sensor.

9. CHECK INTERMITTENT INCIDENT

Refer to EC-706.

>> **INSPECTION END**

Component Inspection

INFOID:0000000005285255

MASS AIR FLOW SENSOR

WITH CONSULT-III

1. Reconnect all harness connectors disconnected.
2. Start engine and warm it up to normal operating temperature.
3. Connect CONSULT-III and select “DATA MONITOR” mode.
4. Select “MAS A/F SE-B1” and check indication under the following conditions.

Condition	MAS A/F SE-B1 (V)
Ignition switch ON (Engine stopped.)	Approx 0.4
Idle (Engine is warmed-up to normal operating temperature.)	0.9 - 1.2
2,500 rpm (Engine is warmed-up to normal operating temperature.)	1.5 - 1.8
Idle to about 4,000 rpm	0.9 - 1.2 to 2.4*

*: Check for linear voltage rise in response to engine being increased to about 4,000 rpm.

5. If the voltage is out of specification, proceed the following.

a. Check for the cause of uneven air flow through mass air flow sensor. Refer to following.
   - Crushed air ducts
   - Malfunctioning seal of air cleaner element
   - Uneven dirt of air cleaner element
   - Improper specification of intake air system parts

b. If NG, repair or replace malfunctioning part and perform step 2 to 4 again.
   If OK, go to next step.

6. Turn ignition switch OFF.
7. Disconnect mass air flow sensor harness connector and reconnect it again.
8. Perform step 2 to 4 again.
9. If NG, clean or replace mass air flow sensor.

WITHOUT CONSULT-III

1. Reconnect all harness connectors disconnected.
2. Start engine and warm it up to normal operating temperature.
3. Check voltage between ECM terminal 45 (Mass air flow sensor signal) and ground.

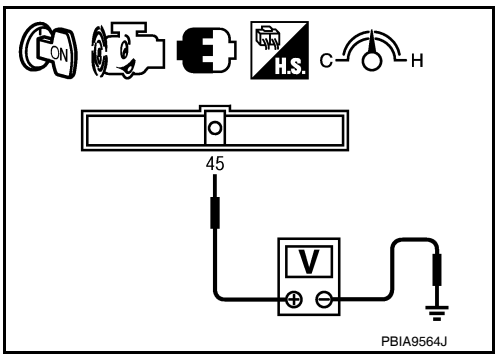

Condition	Voltage (V)
Ignition switch ON (Engine stopped.)	Approx 0.4
Idle (Engine is warmed-up to normal operating temperature.)	0.9 - 1.2
2,500 rpm (Engine is warmed-up to normal operating temperature.)	1.5 - 1.8
Idle to about 4,000 rpm	0.9 - 1.2 to 2.4*

*: Check for linear voltage rise in response to engine being increased to about 4,000 rpm.

4. If the voltage is out of specification, proceed the following.

a. Check for the cause of uneven air flow through mass air flow sensor. Refer to following.
   - Crushed air ducts
   - Malfunctioning seal of air cleaner element
   - Uneven dirt of air cleaner element
   - Improper specification of intake air system parts

b. If NG, repair or replace malfunctioning part and perform step 2 and 3 again.
   If OK, go to next step.

5. Turn ignition switch OFF.
6. Disconnect mass air flow sensor harness connector and reconnect it again.
7. Perform step 2 and 3 again.
8. If NG, clean or replace mass air flow sensor.

Removal and Installation

INFOID:0000000005285256

MASS AIR FLOW SENSOR

Refer to EM-16.

DTC P0112, P0113 IAT SENSOR

Component Description

INFOID:0000000005285257

The intake air temperature sensor is built-into mass air flow sensor (1). The sensor detects intake air temperature and transmits a signal to the ECM.
The temperature sensing unit uses a thermistor which is sensitive to the change in temperature. Electrical resistance of the thermistor decreases in response to the temperature rise.

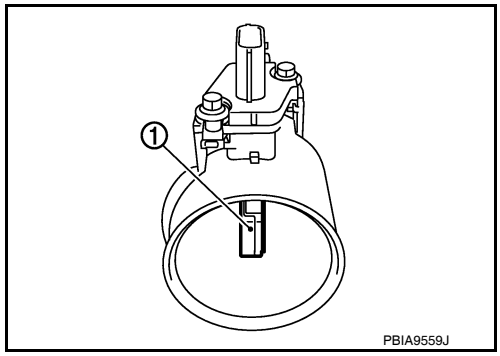

<Reference data>

Intake air temperature [°C (°F)]	Voltage* (V)	Resistance (kΩ)
25 (77)	3.3	1.800 - 2.200
80 (176)	1.2	0.283 - 0.359

*: This data is reference value and is measured between ECM terminal 46 (Intake air temperature sensor) and ground.

CAUTION:
Do not use ECM ground terminals when measuring input/output voltage. Doing so may result in damage to the ECM's transistor. Use a ground other than ECM terminals, such as the ground.

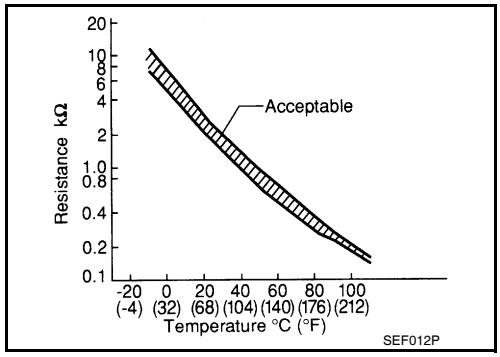

On Board Diagnosis Logic

INFOID:0000000005285258

DTC No.	Trouble diagnosis name	DTC detecting condition	Possible cause
P0112 0112	Intake air temperature sensor circuit low input	An excessively low voltage from the sensor is sent to ECM.	• Harness or connectors (Intake air temperature sensor circuit is open or shorted.) • Intake air temperature sensor
P0113 0113	Intake air temperature sensor circuit high input	An excessively high voltage from the sensor is sent to ECM.	

DTC Confirmation Procedure

INFOID:0000000005285259

NOTE:
If DTC Confirmation Procedure has been previously conducted, always turn ignition switch OFF and wait at least 10 seconds before conducting the next test.

1. Turn ignition switch ON and wait at least 5 seconds.
2. Check 1st trip DTC.
3. If 1st trip DTC is detected, go to EC-755, "Diagnosis Procedure".

Wiring Diagram

INFOID:0000000005285260

EC-IATS-01

: DETECTABLE LINE FOR DTC
: NON-DETECTABLE LINE FOR DTC

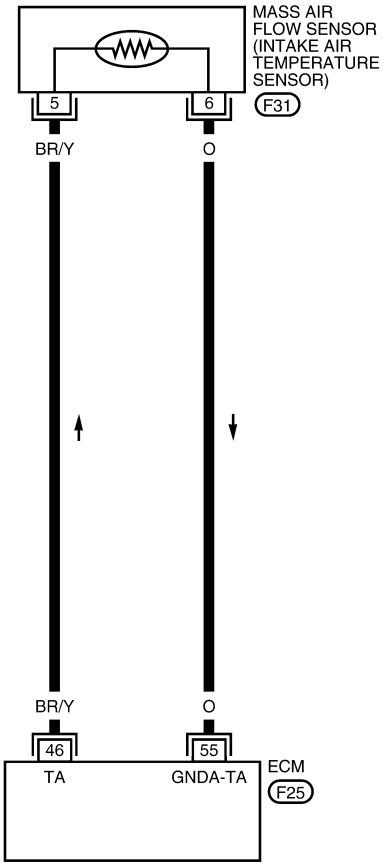

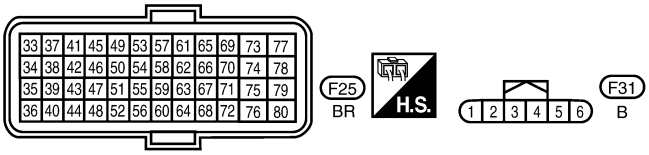

BBWA2875E

Diagnosis Procedure

INFOID:0000000005285261

1. CHECK GROUND CONNECTIONS

1. Turn ignition switch OFF.

2. Loosen and retighten ground screws on the body.
   Refer to EC-711, "Ground Inspection".
- ⇦ : Vehicle front
- Body ground (1)

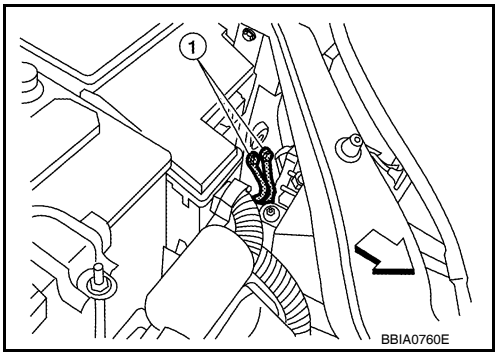

OK or NG

OK >> GO TO 2.
NG >> Repair or replace ground connections.

2. CHECK INTAKE AIR TEMPERATURE SENSOR POWER SUPPLY CIRCUIT

1. Disconnect mass air flow sensor (with intake air temperature sensor) (1) harness connector.
2. Turn ignition switch ON.

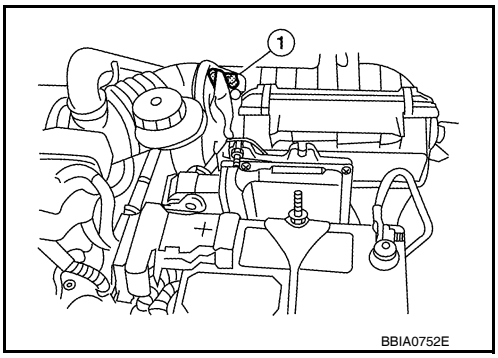

3. Check voltage between mass air flow sensor terminal 5 and ground with CONSULT-III or tester.

Voltage: Approximately 5 V

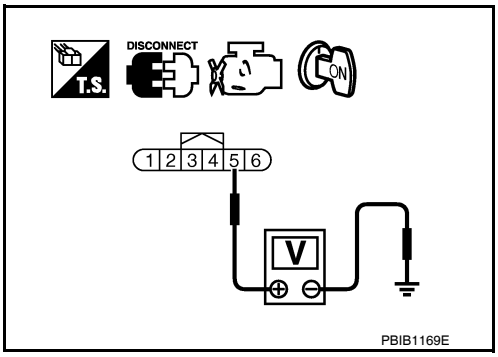

OK or NG

OK >> GO TO 3.
NG >> Repair open circuit or short to ground or short to power in harness or connectors.

3. CHECK INTAKE AIR TEMPERATURE SENSOR GROUND CIRCUIT FOR OPEN AND SHORT

1. Turn ignition switch OFF.
2. Disconnect ECM harness connector.
3. Check harness continuity between mass air flow sensor terminal 6 and ECM terminal 55.
   Refer to Wiring Diagram.

Continuity should exist.

4. Also check harness for short to ground and short to power.

OK or NG

OK >> GO TO 4.
NG >> Repair open circuit or short to ground or short to power in harness or connectors.

4. CHECK INTAKE AIR TEMPERATURE SENSOR

Refer to EC-757, "Component Inspection".

OK or NG

OK >> GO TO 5.
NG >> Replace mass air flow sensor (with intake air temperature sensor).

5. CHECK INTERMITTENT INCIDENT

Refer to EC-706.

>> **INSPECTION END**

Component Inspection

INFOID:0000000005285262

INTAKE AIR TEMPERATURE SENSOR

1. Check resistance between mass air flow sensor (1) terminals 5 and 6 under the following conditions.

Intake air temperature [°C (°F)]	Resistance (kΩ)
25 (77)	1.800 - 2.200

2. If NG, replace mass air flow sensor (with intake air temperature sensor).

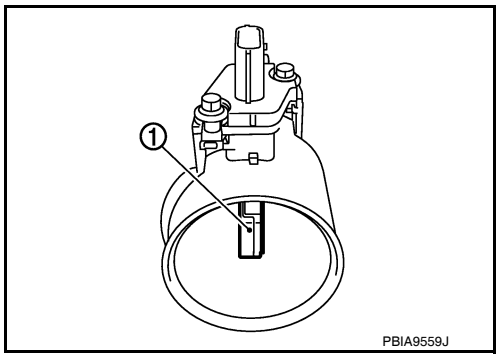

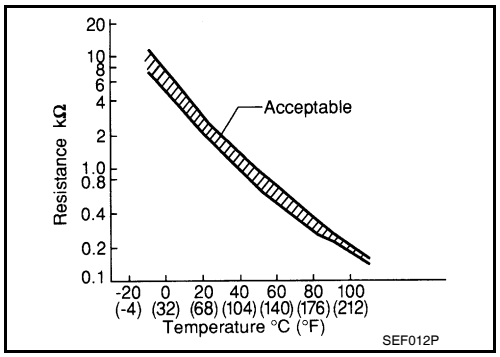

Removal and Installation

INFOID:0000000005285263

MASS AIR FLOW SENSOR

Refer to EM-16.

DTC P0116 ECT SENSOR

Component Description

INFOID:0000000005285264

The engine coolant temperature sensor is used to detect the engine coolant temperature. The sensor modifies a voltage signal from the ECM. The modified signal returns to the ECM as the engine coolant temperature input. The sensor uses a thermistor which is sensitive to the change in temperature. The electrical resistance of the thermistor decreases as temperature increases.

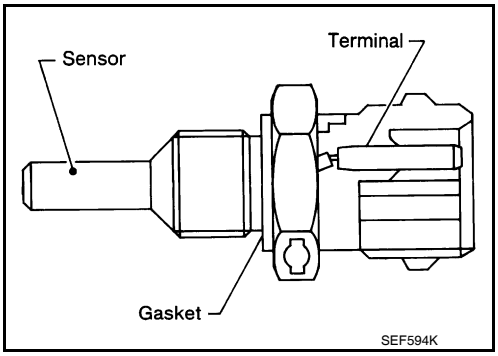

<Reference data>

Engine coolant temperature [°C (°F)]	Voltage* (V)	Resistance (kΩ)
–10 (14)	4.4	7.0 - 11.4
20 (68)	3.5	2.1 - 2.9
50 (122)	2.2	0.68 - 1.00
90 (194)	0.9	0.236 - 0.260

*: This data is reference value and is measured between ECM terminal 38 (Engine coolant temperature sensor) and ground.

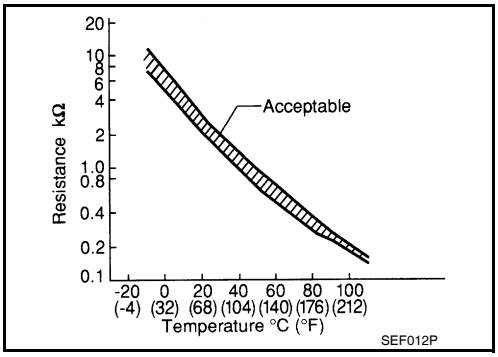

CAUTION:
Do not use ECM ground terminals when measuring input/output voltage. Doing so may result in damage to the ECM's transistor. Use a ground other than ECM terminals, such as the ground.

On Board Diagnosis Logic

INFOID:0000000005285265

NOTE:
If DTC P0116 is displayed with P0117 or P0118, first perform the trouble diagnosis for DTC P0117, P0118. Refer to EC-761.

DTC No.	Trouble diagnosis name	DTC detecting condition	Possible cause
P0116 0116	Engine coolant temperature sensor circuit range/performance	Engine coolant temperature signal from engine coolant temperature sensor does not fluctuate, even when some time has passed after starting the engine with pre-warming up condition.	• Harness or connectors (High or low resistance in the circuit) • Engine coolant temperature sensor

DTC Confirmation Procedure

INFOID:0000000005285266

NOTE:
If DTC Confirmation Procedure has been previously conducted, always turn ignition switch OFF and wait at least 10 seconds before conducting the next test.

TESTING CONDITION:
Before performing the following procedure, do not add fuel.

1. Start engine and warm it up to normal operating temperature.
2. Rev engine up to 2,000 rpm for more than10 minutes.
3. Move the vehicle to a cool place, then stop engine and turn ignition switch OFF.
4. Check resistance between “fuel level sensor unit and fuel pump” terminals 4 and 5.
5. Soak the vehicle until the resistance between “fuel level sensor unit and fuel pump” terminals 4 and 5 becomes 0.5 kΩ higher than the value measured before soaking.
   CAUTION:
   Never turn ignition switch ON during soaking time.

NOTE:
Soak time changes depending on ambient air temperature. It may take several hours.

6. Start engine and let it idle for 20 minutes.
7. Check 1st trip DTC.
8. If 1st trip DTC is detected, go to EC-759, "Diagnosis Procedure".

Diagnosis Procedure

INFOID:0000000005285267

1. CHECK GROUND CONNECTIONS

1. Turn ignition switch OFF.
2. Loosen and retighten ground screws on the body.
   Refer to EC-711, "Ground Inspection".

- ⇦ : Vehicle front
- Body ground (1)

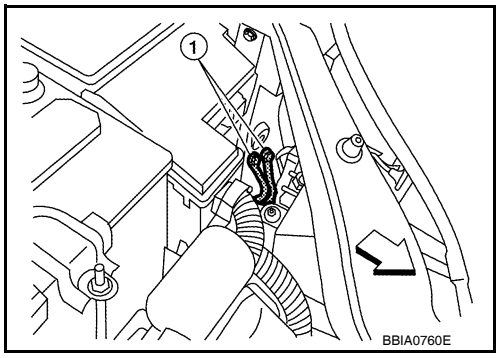

OK or NG

OK >> GO TO 2.
NG >> Repair or replace ground connections.

2. CHECK ENGINE COOLANT TEMPERATURE SENSOR

Refer to EC-759, "Component Inspection".

OK or NG

OK >> GO TO 3.
NG >> Replace engine coolant temperature sensor.

3. CHECK INTERMITTENT INCIDENT

Refer to EC-706.
Refer to EC-763, "Wiring Diagram".

>> **INSPECTION END**

Component Inspection

INFOID:0000000005285268

ENGINE COOLANT TEMPERATURE SENSOR

1. Check resistance between engine coolant temperature sensor terminals 1 and 2 as shown in the figure.

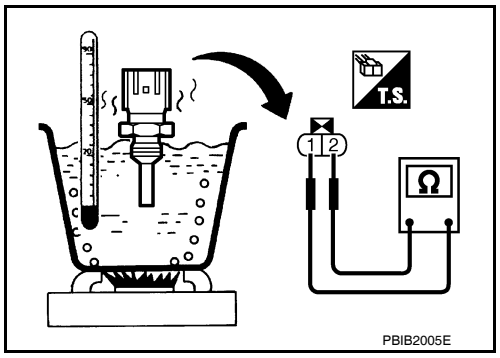

Temperature [°C (°F)]	Resistance (kΩ)
20 (68)	2.1 - 2.9
50 (122)	0.68 - 1.00
90 (194)	0.236 - 0.260

2. If NG, replace engine coolant temperature sensor.

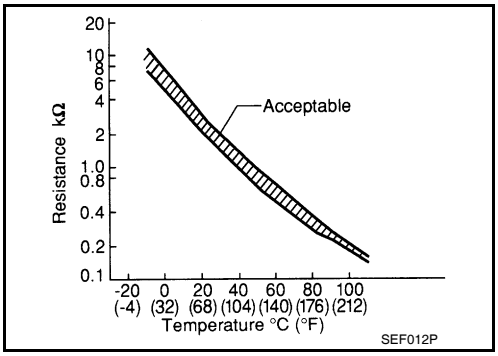

Removal and Installation

INFOID:0000000005285269

ENGINE COOLANT TEMPERATURE SENSOR
Refer to EM-65.

DTC P0117, P0118 ECT SENSOR

Component Description

INFOID:0000000005285270

The engine coolant temperature sensor is used to detect the engine coolant temperature. The sensor modifies a voltage signal from the ECM. The modified signal returns to the ECM as the engine coolant temperature input. The sensor uses a thermistor which is sensitive to the change in temperature. The electrical resistance of the thermistor decreases as temperature increases.

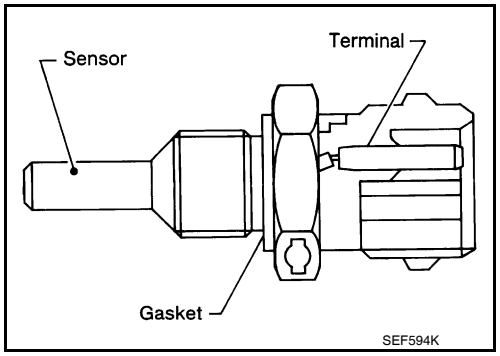

<Reference data>

Engine coolant temperature [°C (°F)]	Voltage* (V)	Resistance (kΩ)
–10 (14)	4.4	7.0 - 11.4
20 (68)	3.5	2.1 - 2.9
50 (122)	2.2	0.68 - 1.00
90 (194)	0.9	0.236 - 0.260

*: This data is reference value and is measured between ECM terminal 38 (Engine coolant temperature sensor) and ground.

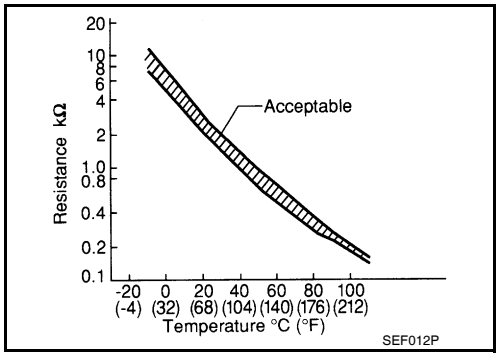

CAUTION:

Do not use ECM ground terminals when measuring input/output voltage. Doing so may result in damage to the ECM's transistor. Use a ground other than ECM terminals, such as the ground.

On Board Diagnosis Logic

INFOID:0000000005285271

These self-diagnoses have the one trip detection logic.

DTC No.	Trouble Diagnosis Name	DTC Detecting Condition	Possible Cause
P0117 0117	Engine coolant temperature sensor circuit low input	An excessively low voltage from the sensor is sent to ECM.	• Harness or connectors (Engine coolant temperature sensor circuit is open or shorted.) • Engine coolant temperature sensor
P0118 0118	Engine coolant temperature sensor circuit high input	An excessively high voltage from the sensor is sent to ECM.	

FAIL-SAFE MODE

When the malfunction is detected, the ECM enters fail-safe mode and the MIL lights up.

Detected items	Engine operating condition in fail-safe mode	
Engine coolant temperature sensor circuit	Engine coolant temperature will be determined by ECM based on the following condition. CONSULT-III displays the engine coolant temperature decided by ECM.	
	Condition	Engine coolant temperature decided (CONSULT-III display)
	Just as ignition switch is turned ON or START	40°C (104°F)
	Approx 4 minutes or more after engine starting.	80°C (176°F)
	Except as shown above	40 - 80°C (104 - 176°F) (Depends on the time)
	When the fail-safe system for engine coolant temperature sensor is activated, the cooling fan operates while engine is running.	

DTC Confirmation Procedure

INFOID:0000000005285272

NOTE:
If DTC Confirmation Procedure has been previously conducted, always turn ignition switch OFF and wait at least 10 seconds before conducting the next test.

1. Turn ignition switch ON and wait at least 5 seconds.
2. Check DTC.
3. If DTC is detected, go to EC-763, "Diagnosis Procedure".

Wiring Diagram

INFOID:0000000005285273

EC-ECTS-01

: DETECTABLE LINE FOR DTC
: NON-DETECTABLE LINE FOR DTC

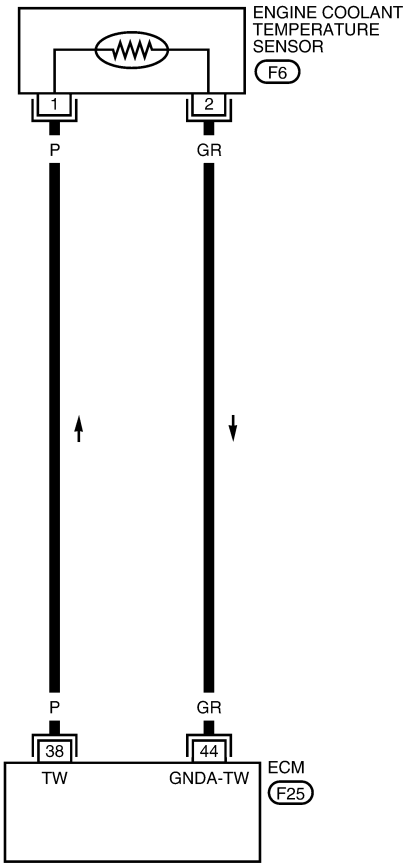

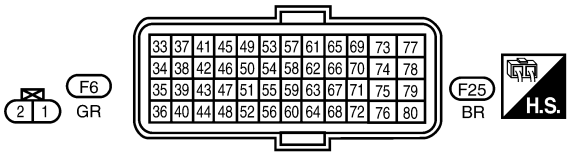

BBWA2876E

Diagnosis Procedure

INFOID:0000000005285274

1. CHECK GROUND CONNECTIONS

1. Turn ignition switch OFF.

2. Loosen and retighten ground screws on the body.
   Refer to EC-711, "Ground Inspection".
- ⇦ : Vehicle front
- Body ground (1)

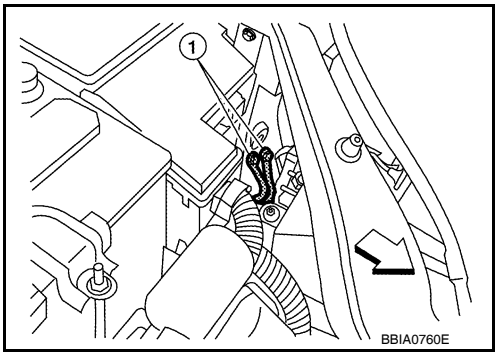

OK or NG

OK >> GO TO 2.
NG >> Repair or replace ground connections.

2. CHECK ECT SENSOR POWER SUPPLY CIRCUIT

1. Disconnect engine coolant temperature (ECT) sensor (1) harness connector.
- ⇦: Vehicle front
2. Turn ignition switch ON.

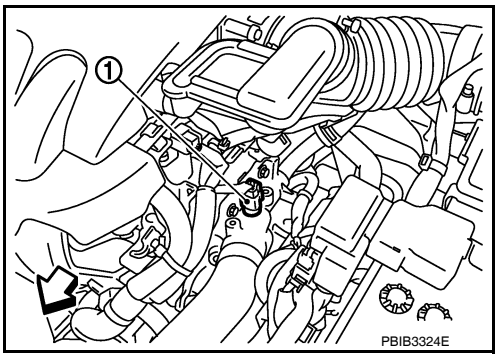

3. Check voltage between ECT sensor terminal 1 and ground with CONSULT-III or tester.

Voltage: Approximately 5 V

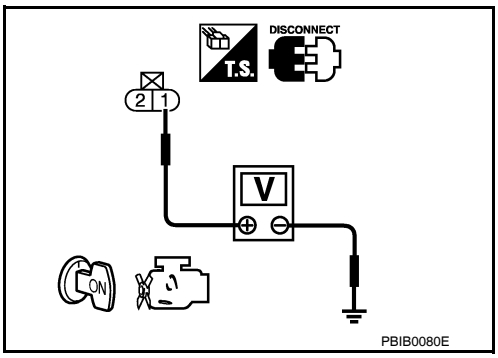

OK or NG

OK >> GO TO 3.
NG >> Repair open circuit or short to ground or short to power in harness or connectors.

3. CHECK ECT SENSOR GROUND CIRCUIT FOR OPEN AND SHORT

1. Turn ignition switch OFF.
2. Disconnect ECM harness connector.
3. Check harness continuity between ECM terminal 44 and ECT sensor terminal 2.
   Refer to Wiring Diagram.

Continuity should exist.

4. Also check harness for short to ground and short to power.

OK or NG

OK >> GO TO 4.
NG >> Repair open circuit or short to ground or short to power in harness or connectors.

4. CHECK ENGINE COOLANT TEMPERATURE SENSOR

Refer to EC-765, "Component Inspection".

OK or NG

OK >> GO TO 5.
NG >> Replace engine coolant temperature sensor.

5. CHECK INTERMITTENT INCIDENT

Refer to EC-706.

>> **INSPECTION END**

Component Inspection

INFOID:0000000005285275

ENGINE COOLANT TEMPERATURE SENSOR

1. Check resistance between engine coolant temperature sensor terminals 1 and 2 as shown in the figure.

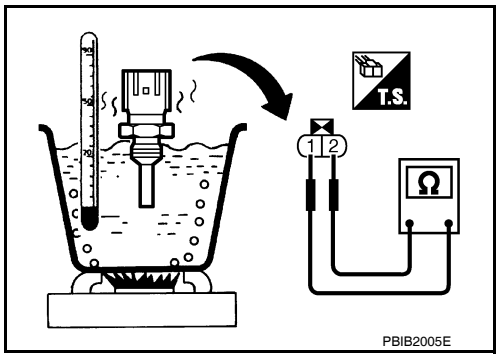

Temperature [°C (°F)]	Resistance (kΩ)
20 (68)	2.1 - 2.9
50 (122)	0.68 - 1.00
90 (194)	0.236 - 0.260

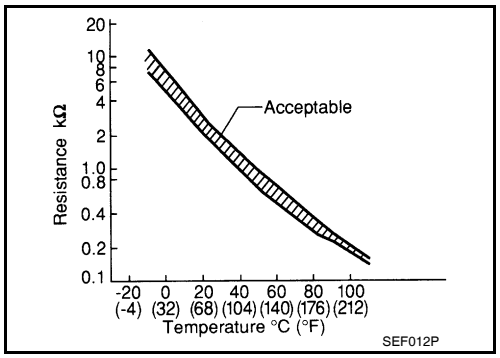

2. If NG, replace engine coolant temperature sensor.

Removal and Installation

INFOID:0000000005285276

ENGINE COOLANT TEMPERATURE SENSOR

Refer to EM-65.

DTC P0122, P0123 TP SENSOR

Component Description

INFOID:0000000005285277

Electric throttle control actuator consists of throttle control motor, throttle position sensor, etc. The throttle position sensor responds to the throttle valve movement.
The throttle position sensor has two sensors. These sensors are a kind of potentiometers which transform the throttle valve position into output voltage, and emit the voltage signal to the ECM. In addition, these sensors detect the opening and closing speed of the throttle valve and feed the voltage signals to the ECM. The ECM judges the current opening angle of the throttle valve from these signals and the ECM controls the throttle control motor to make the throttle valve opening angle properly in response to driving condition.

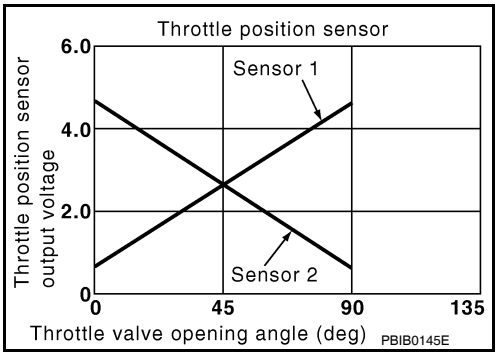

CONSULT-III Reference Value in Data Monitor Mode

INFOID:0000000005285278

Specification data are reference values.

Monitor item	Condition		Specification
TP SEN 1-B1 TP SEN 2-B1*	• Ignition switch: ON (Engine stopped) • Shift lever: D (CVT), 1st (M/T)	Accelerator pedal: Fully released	More than 0.36 V
		Accelerator pedal: Fully depressed	Less than 4.75 V

*: Throttle position sensor 2 signal is converted by ECM internally. Thus, it differs from ECM terminal voltage signal.

On Board Diagnosis Logic

INFOID:0000000005285279

These self-diagnoses have the one trip detection logic.
NOTE:
If DTC P0122 or P0123 is displayed with DTC P0643, first perform the trouble diagnosis for DTC P0643. Refer to EC-976.

DTC No.	Trouble diagnosis name	DTC detecting condition	Possible cause
P0122 0122	Throttle position sensor 2 circuit low input	An excessively low voltage from the TP sensor 2 is sent to ECM.	• Harness or connectors (TP sensor 2 circuit is open or shorted.) • Electric throttle control actuator (TP sensor 2)
P0123 0123	Throttle position sensor 2 circuit high input	An excessively high voltage from the TP sensor 2 is sent to ECM.	

FAIL-SAFE MODE

When the malfunction is detected, ECM enters fail-safe mode and the MIL lights up.

Engine operation condition in fail-safe mode
The ECM controls the electric throttle control actuator in regulating the throttle opening in order for the idle position to be within +10 degrees. The ECM regulates the opening speed of the throttle valve to be slower than the normal condition. So, the acceleration will be poor.

DTC Confirmation Procedure

INFOID:0000000005285280

NOTE:
If DTC Confirmation Procedure has been previously conducted, always turn ignition switch OFF and wait at least 10 seconds before conducting the next test.
TESTING CONDITION:
Before performing the following procedure, confirm that battery voltage is more than 8 V at idle.

1. Start engine and let it idle for 1 second.
2. Check DTC.
3. If DTC is detected, go to EC-768, "Diagnosis Procedure".

Wiring Diagram

INFOID:0000000005285281

EC-TPS2-01

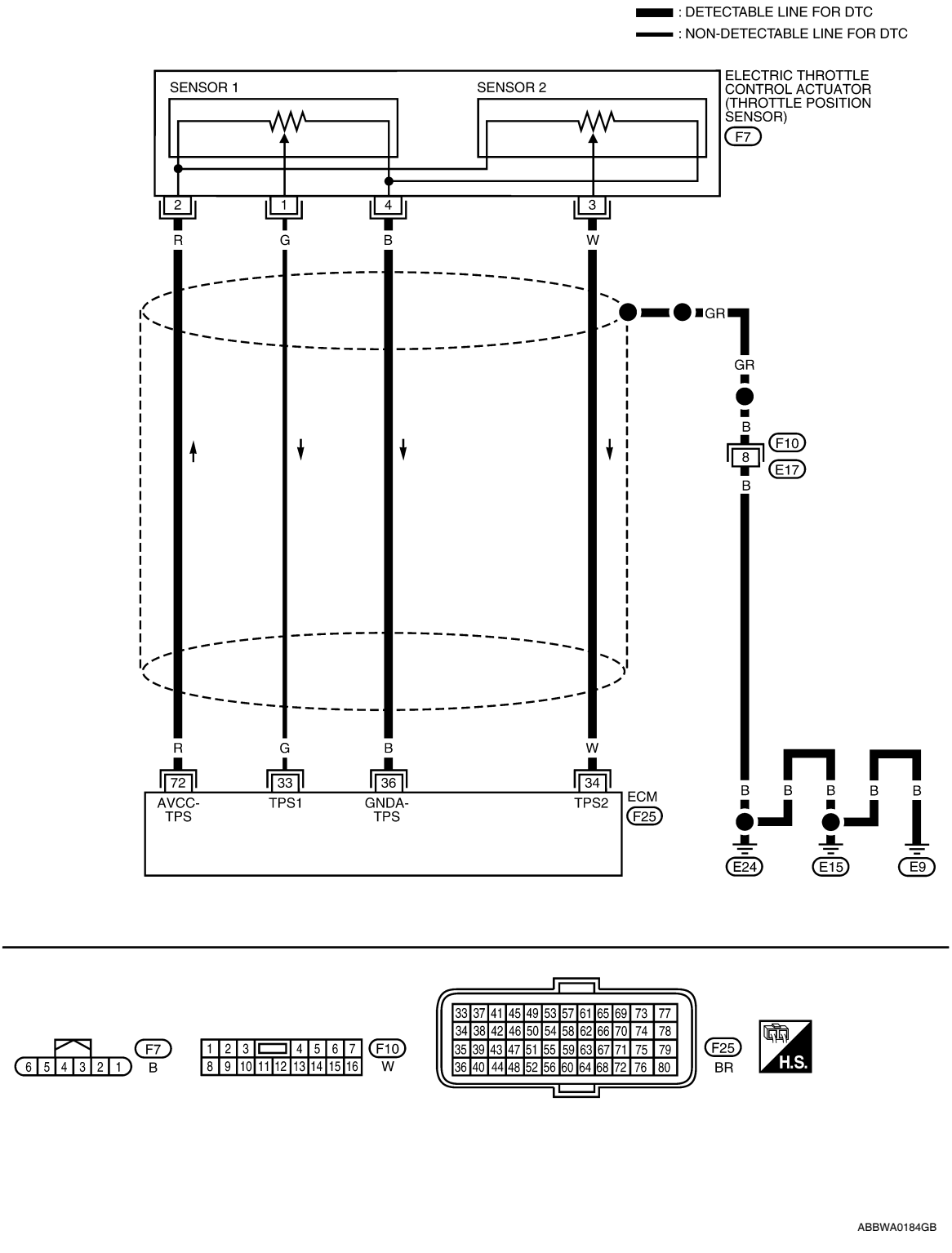

Specification data are reference values and are measured between each terminal and ground.

CAUTION:

Do not use ECM ground terminals when measuring input/output voltage. Doing so may result in damage to the ECM's transistor. Use a ground other than ECM terminals, such as the ground.

TERMINAL NO.	WIRE COLOR	ITEM	CONDITION	DATA (DC Voltage)
33	G	Throttle position sensor 1	**[Ignition switch: ON]** • Engine stopped • Shift lever: D (CVT), 1st (M/T) • Accelerator pedal: Fully released	More than 0.36 V
			[Ignition switch: ON] • Engine stopped • Shift lever: D (CVT), 1st (M/T) • Accelerator pedal: Fully depressed	Less than 4.75 V
34	W	Throttle position sensor 2	**[Ignition switch: ON]** • Engine stopped • Shift lever: D (CVT), 1st (M/T) • Accelerator pedal: Fully released	Less than 4.75 V
			[Ignition switch: ON] • Engine stopped • Shift lever: D (CVT), 1st (M/T) • Accelerator pedal: Fully depressed	More than 0.36 V
36	B	Sensor ground (Throttle position sensor)	**[Engine is running]** • **Warm-up condition** • Idle speed	Approximately 0 V
72	R	Sensor power supply (Throttle position sensor)	**[Ignition switch: ON]**	Approximately 5 V

Diagnosis Procedure

INFOID:0000000005285282

1. CHECK GROUND CONNECTIONS

1. Turn ignition switch OFF.
2. Loosen and retighten ground screws on the body.
   Refer to EC-711, "Ground Inspection".

- ⇦ : Vehicle front
- Body ground (1)

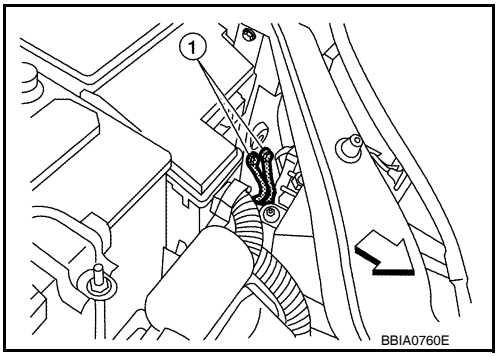

OK or NG

OK >> GO TO 2.
NG >> Repair or replace ground connections.

2. CHECK THROTTLE POSITION SENSOR 2 POWER SUPPLY CIRCUIT

1. Disconnect electric throttle control actuator (1) harness connector.
2. Turn ignition switch ON.

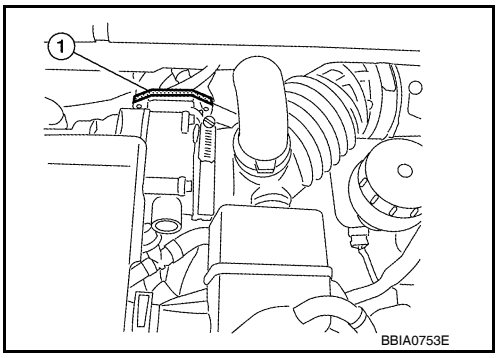

3. Check voltage between electric throttle control actuator terminal 2 and ground with CONSULT-III or tester.

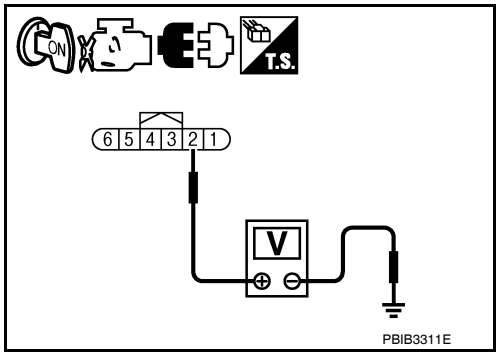

Voltage: Approximately 5 V

OK or NG

OK >> GO TO 3.
NG >> Repair open circuit or short to ground or short to power in harness or connectors.

3. CHECK THROTTLE POSITION SENSOR 2 GROUND CIRCUIT FOR OPEN AND SHORT

1. Turn ignition switch OFF.
2. Disconnect ECM harness connector.
3. Check harness continuity between electric throttle control actuator terminal 4 and ECM terminal 36. Refer to Wiring Diagram.

Continuity should exist.

4. Also check harness for short to ground and short to power.

OK or NG

OK >> GO TO 4.
NG >> Repair open circuit or short to ground or short to power in harness or connectors.

4. CHECK THROTTLE POSITION SENSOR 2 INPUT SIGNAL CIRCUIT FOR OPEN AND SHORT

1. Check harness continuity between ECM terminal 34 and electric throttle control actuator terminal 3. Refer to Wiring Diagram.

Continuity should exist.

2. Also check harness for short to ground and short to power.

OK or NG

OK >> GO TO 5.
NG >> Repair open circuit or short to ground or short to power in harness or connectors.

5. CHECK THROTTLE POSITION SENSOR

Refer to EC-769, "Component Inspection".

OK or NG

OK >> GO TO 7.
NG >> GO TO 6.

6. REPLACE ELECTRIC THROTTLE CONTROL ACTUATOR

1. Replace the electric throttle control actuator.
2. Perform EC-654, "Throttle Valve Closed Position Learning".
3. Perform EC-654, "Idle Air Volume Learning".

>> **INSPECTION END**

7. CHECK INTERMITTENT INCIDENT

Refer to EC-706.

>> **INSPECTION END**

Component Inspection

INFOID:0000000005285283

THROTTLE POSITION SENSOR

1. Reconnect all harness connectors disconnected.

2. Perform EC-654, "Throttle Valve Closed Position Learning".
3. Turn ignition switch ON.
4. Set shift lever to D position (CVT) or 1st position (M/T).
5. Check voltage between ECM terminals 33 (TP sensor 1 signal), 34 (TP sensor 2 signal) and ground under the following conditions.

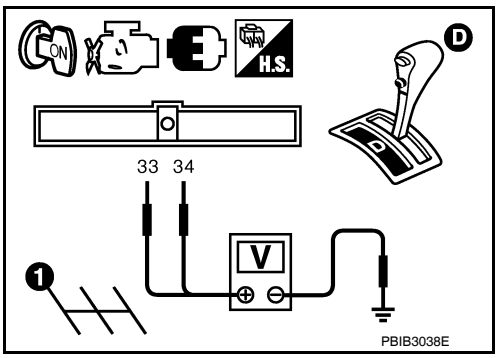

Terminal	Accelerator pedal	Voltage
33 (Throttle position sensor 1)	Fully released	More than 0.36 V
	Fully depressed	Less than 4.75 V
34 (Throttle position sensor 2)	Fully released	Less than 4.75 V
	Fully depressed	More than 0.36 V

6. If NG, replace electric throttle control actuator and go to the next step.
7. Perform EC-654, "Throttle Valve Closed Position Learning".
8. Perform EC-654, "Idle Air Volume Learning".

Removal and Installation

INFOID:0000000005285284

ELECTRIC THROTTLE CONTROL ACTUATOR

Refer to EM-18.

DTC P0125 ECT SENSOR

Component Description

INFOID:0000000005285285

The engine coolant temperature sensor is used to detect the engine coolant temperature. The sensor modifies a voltage signal from the ECM. The modified signal returns to the ECM as the engine coolant temperature input. The sensor uses a thermistor which is sensitive to the change in temperature. The electrical resistance of the thermistor decreases as temperature increases.

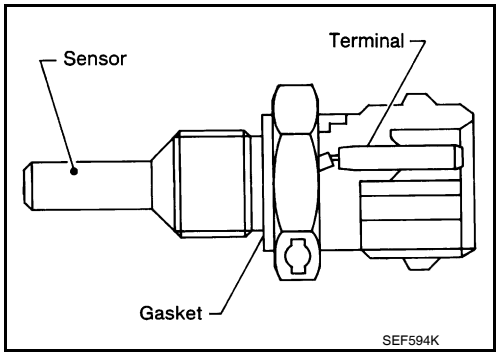

<Reference data>

Engine coolant temperature [°C (°F)]	Voltage* (V)	Resistance (kΩ)
–10 (14)	4.4	7.0 - 11.4
20 (68)	3.5	2.1 - 2.9
50 (122)	2.2	0.68 - 1.00
90 (194)	0.9	0.236 - 0.260

*: This data is reference value and is measured between ECM terminal 38 (Engine coolant temperature sensor) and ground.

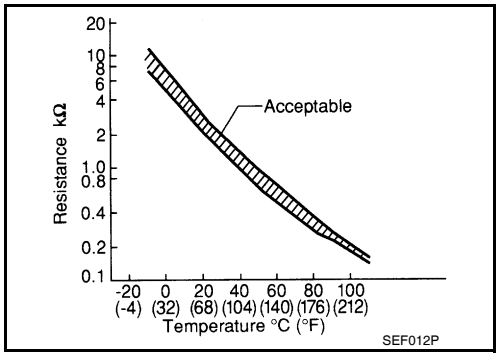

CAUTION:
Do not use ECM ground terminals when measuring input/output voltage. Doing so may result in damage to the ECM's transistor. Use a ground other than ECM terminals, such as the ground.

On Board Diagnosis Logic

INFOID:0000000005285286

NOTE:
- If DTC P0125 is displayed with P0117 or P0118, first perform the trouble diagnosis for DTC P0117 or P0118. Refer to EC-761.
- If DTC P0125 is displayed with P0116, first perform the trouble diagnosis for DTC P0116. Refer to EC-758.

DTC No.	Trouble diagnosis name	DTC detecting condition	Possible cause
P0125 0125	Insufficient engine coolant temperature for closed loop fuel control	• Voltage sent to ECM from the sensor is not practical, even when some time has passed after starting the engine. • Engine coolant temperature is insufficient for closed loop fuel control.	• Harness or connectors (High resistance in the circuit) • Engine coolant temperature sensor • Thermostat

DTC Confirmation Procedure

INFOID:0000000005285287

CAUTION:
Be careful not to overheat engine.
NOTE:
If DTC Confirmation Procedure has been previously conducted, always turn ignition switch OFF and wait at least 10 seconds before conducting the next test.

WITH CONSULT-III

1. Turn ignition switch ON.
2. Select “DATA MONITOR” mode with CONSULT-III.
3. Check that “COOLAN TEMP/S” is above –°C (25°F).
   If it is above –°C (25°F), the test result will be OK.

If it is below –°C (25°F), go to following step.

4. Start engine and run it for 65 minutes at idle speed.
   If "COOLAN TEMP/S" increases to more than –°C (25°F) within 65 minutes, stop engine because the test result will be OK.
5. Check 1st trip DTC.
6. If 1st trip DTC is detected, go to EC-772, "Diagnosis Procedure".

WITH GST

Follow the procedure "WITH CONSULT-III" above.

Diagnosis Procedure

INFOID:0000000005285288

1. CHECK GROUND CONNECTIONS

1. Turn ignition switch OFF.
2. Loosen and retighten ground screws on the body.
   Refer to EC-711, "Ground Inspection".

- ⇦ : Vehicle front
- Body ground (1)

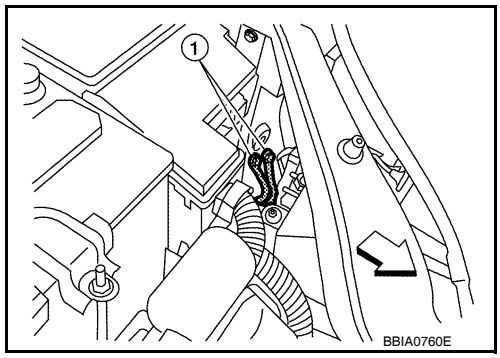

OK or NG

OK >> GO TO 2.
NG >> Repair or replace ground connections.

2. CHECK ENGINE COOLANT TEMPERATURE SENSOR

Refer to EC-772, "Component Inspection".

OK or NG

OK >> GO TO 3.
NG >> Replace engine coolant temperature sensor.

3. CHECK THERMOSTAT OPERATION

When the engine is cold [lower than 70°C (158°F)] condition, grasp lower radiator hose and confirm the engine coolant does not flow.

OK or NG

OK >> GO TO 4.
NG >> Repair or replace thermostat. Refer to CO-21.

4. CHECK INTERMITTENT INCIDENT

Refer to EC-706.
Refer to EC-763, "Wiring Diagram".

>> **INSPECTION END**

Component Inspection

INFOID:0000000005285289

ENGINE COOLANT TEMPERATURE SENSOR

1. Check resistance between engine coolant temperature sensor terminals 1 and 2 as shown in the figure.

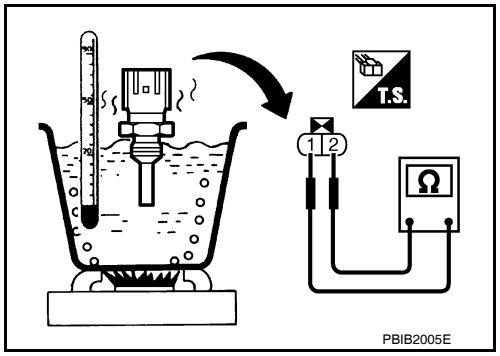

Temperature [°C (°F)]	Resistance (kΩ)
20 (68)	2.1 - 2.9
50 (122)	0.68 - 1.00
90 (194)	0.236 - 0.260

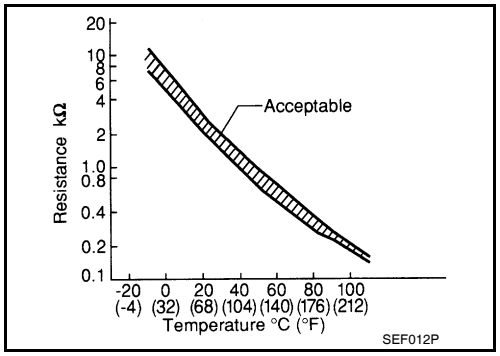

2. If NG, replace engine coolant temperature sensor.

Removal and Installation

INFOID:0000000005285290

ENGINE COOLANT TEMPERATURE SENSOR

Refer to EM-65.

DTC P0127 IAT SENSOR

Component Description

INFOID:0000000005285291

The intake air temperature sensor is built into mass air flow sensor (1). The sensor detects intake air temperature and transmits a signal to the ECM.
The temperature sensing unit uses a thermistor which is sensitive to the change in temperature. Electrical resistance of the thermistor decreases in response to the temperature rise.

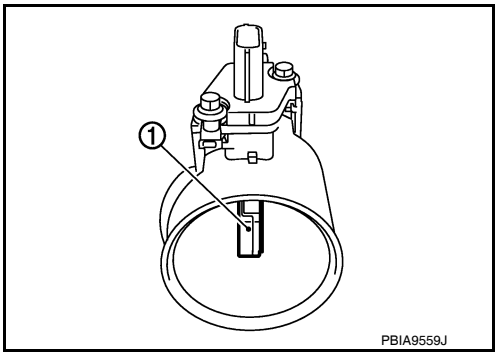

<Reference data>

Intake air temperature [°C (°F)]	Voltage* (V)	Resistance (kΩ)
25 (77)	3.3	1.800 - 2.200
80 (176)	1.2	0.283 - 0.359

*: This data is reference value and is measured between ECM terminal 46 (Intake air temperature sensor) and ground.

CAUTION:
Do not use ECM ground terminals when measuring input/output voltage. Doing so may result in damage to the ECM's transistor. Use a ground other than ECM terminals, such as the ground.

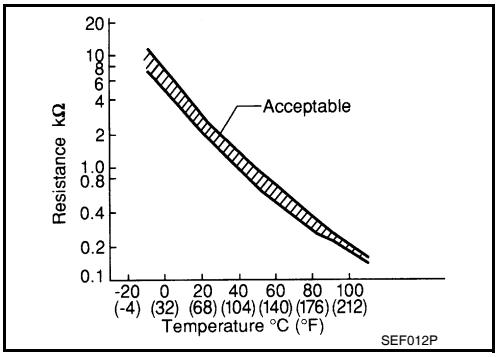

On Board Diagnosis Logic

INFOID:0000000005285292

DTC No.	Trouble diagnosis name	DTC detecting condition	Possible cause
P0127 0127	Intake air temperature too high	Rationally incorrect voltage from the sensor is sent to ECM, compared with the voltage signal from engine coolant temperature sensor.	• Harness or connectors (Intake temperature sensor circuit is open or shorted) • Intake air temperature sensor

DTC Confirmation Procedure

INFOID:0000000005285293

CAUTION:
Always drive vehicle at a safe speed.
NOTE:
If DTC Confirmation Procedure has been previously conducted, always turn ignition switch OFF and wait at least 10 seconds before conducting the next test.
TESTING CONDITION:
This test may be conducted with the drive wheels lifted in the shop or by driving the vehicle. If a road test is expected to be easier, it is unnecessary to lift the vehicle.

WITH CONSULT-III

1. Wait until engine coolant temperature is less than 96°C (205°F)

a. Turn ignition switch ON.
b. Select “DATA MONITOR” mode with CONSULT-III.
c. Check the engine coolant temperature.
d. If the engine coolant temperature is not less than 96°C (205°F), turn ignition switch OFF and cool down engine.
   • Perform the following steps before engine coolant temperature is above 96°C (205°F).

2. Turn ignition switch ON.
3. Select “DATA MONITOR” mode with CONSULT-III.
4. Start engine.
5. Hold vehicle speed at more than 70 km/h (43 MPH) for 100 consecutive seconds.
6. Check 1st trip DTC.
7. If 1st trip DTC is detected, go to EC-775, "Diagnosis Procedure".

WITH GST
Follow the procedure “With CONSULT-III” above.

Diagnosis Procedure

INFOID:0000000005285294

1. CHECK GROUND CONNECTIONS

1. Turn ignition switch OFF.
2. Loosen and retighten ground screws on the body.
   Refer to EC-711, "Ground Inspection".

- ⇦ : Vehicle front
- Body ground (1)

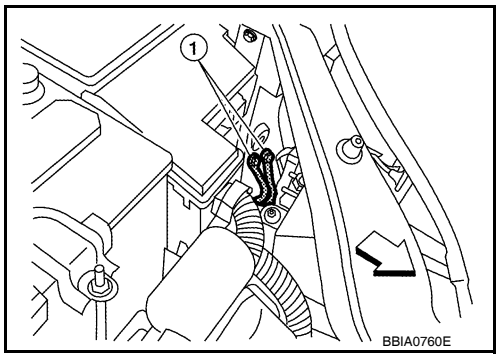

OK or NG

OK >> GO TO 2.
NG >> Repair or replace ground connections.

2. CHECK INTAKE AIR TEMPERATURE SENSOR

Refer to EC-775, "Component Inspection".

OK or NG

OK >> GO TO 3.
NG >> Replace mass air flow sensor (with intake air temperature sensor).

3. CHECK INTERMITTENT INCIDENT

Refer to EC-706.
Refer to EC-755, "Wiring Diagram".

>> **INSPECTION END**

Component Inspection

INFOID:0000000005285295

INTAKE AIR TEMPERATURE SENSOR

1. Check resistance between intake air temperature sensor (1) terminals 5 and 6 under the following conditions.

Intake air temperature [°C (°F)]	Resistance (kΩ)
25 (77)	1.800 - 2.200

2. If NG, replace mass air flow sensor (with intake air temperature sensor).

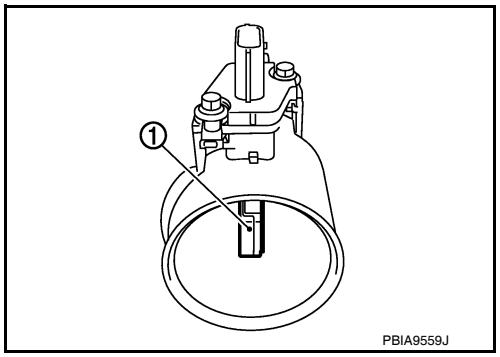

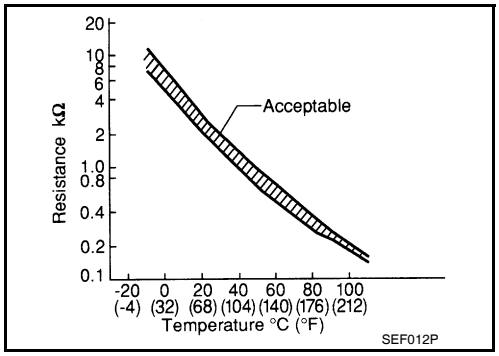

Removal and Installation

INFOID:0000000005285296

MASS AIR FLOW SENSOR
Refer to EM-16.

DTC P0128 THERMOSTAT FUNCTION

On Board Diagnosis Logic

INFOID:0000000005285297

NOTE:
If DTC P0128 is displayed with DTC P0300, P0301, P0302, P0303 or P0304, first perform the trouble diagnosis for DTC P0300, P0301, P0302, P0303, P0304. Refer to EC-860, "DTC Confirmation Procedure".

Engine coolant temperature has not risen enough to open the thermostat even though the engine has run long enough. This is due to a leak in the seal or the thermostat stuck open.

DTC No.	Trouble diagnosis name	DTC detecting condition	Possible cause
P0128 0128	Thermostat function	The engine coolant temperature does not reach to specified temperature even though the engine has run long enough.	• Thermostat • Leakage from sealing portion of thermostat • Engine coolant temperature sensor

DTC Confirmation Procedure

INFOID:0000000005285298

WITH CONSULT-III

CAUTION:
Always drive vehicle at a safe speed.

NOTE:
If DTC Confirmation Procedure has been previously conducted, always turn ignition switch OFF and wait at least 10 seconds before conducting the next test.

TESTING CONDITION:
- **For best results, perform at ambient temperature of –10°C (14°F) or higher.**
- **For best results, perform at engine coolant temperature of –10°C (14°F) to 52°C (126°F).**
- **Before performing the following procedure, do not fill with the fuel.**

1. Turn A/C switch OFF.
2. Turn blower fan switch OFF.
3. Turn ignition switch ON.
4. Select “COOLAN TEMP/S” in “DATA MONITOR” mode with CONSULT-III.
5. Check the indication of “COOLAN TEMP/S”.
   If it is below 52°C (126°F), go to following step.
   If it is above 52°C (126°F), cool down the engine to less than 52°C (126°F). Then go to next steps.
6. Start engine.
7. Drive vehicle for 10 consecutive minutes under the following conditions.

VHCL SPEED SE	More than 56 km/h (35 MPH)

   If “COOLAN TEMP/S” increases to more than 71°C (160°F) within 10 minutes, turn ignition switch OFF because the test result will be OK.
8. Check 1st trip DTC.
9. If 1st trip DTC is detected, go to EC-777, "Diagnosis Procedure".

WITH GST

Follow the procedure “With CONSULT-III” above.

Diagnosis Procedure

INFOID:0000000005285299

1. CHECK ENGINE COOLANT TEMPERATURE SENSOR

Refer to EC-765, "Component Inspection".

OK or NG

OK >> GO TO 2.
NG >> Replace engine coolant temperature sensor.

2. CHECK THERMOSTAT

Refer to CO-22, "Removal and Installation".

OK or NG

OK >> **INSPECTION END**
NG >> Replace thermostat.

Removal and Installation

INFOID:0000000005285300

ENGINE COOLANT TEMPERATURE SENSOR

Refer to CO-21.

DTC P0130 A/F SENSOR 1

Component Description

INFOID:0000000005285301

The air fuel ratio (A/F) sensor 1 is a planar one-cell limit current sensor. The sensor element of the A/F sensor 1 is composed an electrode layer, which transports ions. It has a heater in the element.
The sensor is capable of precise measurement λ = 1, but also in the lean and rich range. Together with its control electronics, the sensor outputs a clear, continuous signal throughout a wide λ range.
The exhaust gas components diffuse through the diffusion layer at the sensor cell. An electrode layer is applied voltage, and this current relative oxygen density in lean. Also this current relative hydrocarbon density in rich.
Therefore, the A/F sensor 1 is able to indicate air fuel ratio by this electrode layer of current. In addition, a heater is integrated in the sensor to ensure the required operating temperature of about 800°C (1,472°F).

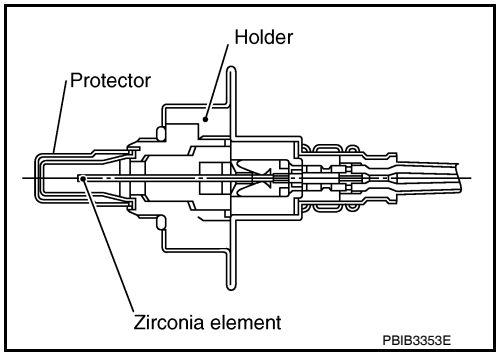

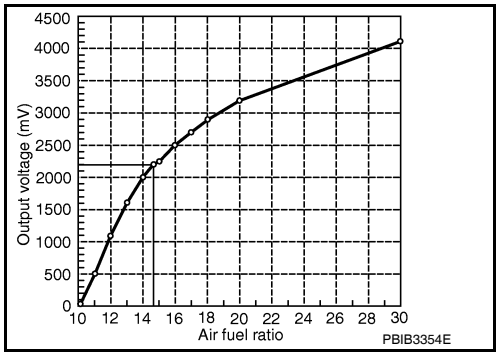

CONSULT-III Reference Value in Data Monitor Mode

INFOID:0000000005285302

Specification data are reference values.

Monitor item	Condition		Specification
A/F SEN1 (B1)	• Engine: After warming up	Maintaining engine speed at 2,000 rpm	Fluctuates around 2.2 V

On Board Diagnosis Logic

INFOID:0000000005285303

To judge the malfunction, the diagnosis checks that the A/F signal computed by ECM from the air fuel ratio (A/F) sensor 1 signal fluctuates according to fuel feedback control.

DTC No.	Trouble diagnosis name	DTC detecting condition		Possible Cause
P0130 0130	Air fuel ratio (A/F) sensor 1 circuit	A)	The A/F signal computed by ECM from the A/F sensor 1 signal is constantly in the range other than approx. 2.2 V.	• Harness or connectors [Air fuel ratio (A/F) sensor 1 circuit is open or shorted.] • Air fuel ratio (A/F) sensor 1
		B)	The A/F signal computed by ECM from the A/F sensor 1 signal is constantly approx. 2.2 V.	

DTC Confirmation Procedure

INFOID:0000000005285304

Perform PROCEDURE FOR MALFUNCTION A first.
If the DTC cannot be confirmed, perform PROCEDURE FOR MALFUNCTION B.
NOTE:
If DTC Confirmation Procedure has been previously conducted, always turn ignition switch OFF and wait at least 10 seconds before conducting the next test.
TESTING CONDITION:
Before performing the following procedure, confirm that battery voltage is more than 11 V at idle.

PROCEDURE FOR MALFUNCTION A

WITH CONSULT-III

1. Start engine and warm it up to normal operating temperature.
2. Select “DATA MONITOR” mode with CONSULT-III.
3. Let engine idle for 2 minutes.
4. Check 1st trip DTC.
5. If 1st trip DTC is detected, go to EC-782, "Diagnosis Procedure".

With GST
Follow the procedure “With CONSULT-III” above.

PROCEDURE FOR MALFUNCTION B

CAUTION:
Always drive vehicle at a safe speed.

WITH CONSULT-III
1. Start engine and warm it up to normal operating temperature.
2. Select “A/F SEN1 (B1)” in “DATA MONITOR” mode with CONSULT-III.
3. Check “A/F SEN1 (B1)” indication.
   If the indication is constantly approx. 2.2 V and does not fluctuates, go to EC-782, "Diagnosis Procedure".
   If the indication fluctuates around 2.2 V, go to next step.
4. Select “A/F SEN1 (B1) P1276 ” (for P0130) of “A/F SEN1” in “DTC WORK SUPPORT” mode with CONSULT-III.
5. Touch “START”.
6. When the following conditions are met, “TESTING” will be displayed on the CONSULT-III screen.

ENG SPEED	1,000 - 3,200 rpm
VHCL SPEED SE	More than 64 km/h (40 MPH)
B/FUEL SCHDL	1.0 - 8.0 msec
Shift lever	D position (CVT) 5th position (M/T)

   If “TESTING” is not displayed after 20 seconds, retry from step 2.
7. Release accelerator pedal fully.
   NOTE:
   Never apply brake during releasing the accelerator pedal.
8. Make sure that “TESTING” changes to “COMPLETED”.
   If “TESTING” changed to “OUT OF CONDITION”, retry from step 6.
9. Make sure that “OK” is displayed after touching “ON-BOARD DIAGNOSIS”.
   If “NG” is displayed, go to EC-782, "Diagnosis Procedure".

Overall Function Check

INFOID:0000000005285305

PROCEDURE MALFUNCTION B

Use this procedure to check the overall function of the A/F sensor 1 circuit. During this check, a 1st trip DTC might not be confirmed.

WITH GST
1. Start engine and warm it up to normal operating temperature.
2. Drive the vehicle at a speed of 80 km/h (50 MPH) for a few minutes in the suitable gear position.
3. Set shift lever to D position (CVT) or 5th position (M/T), then release the accelerator pedal fully until the vehicle speed decreases to 50 km/h (31 MPH).
   NOTE:
   Never apply brake during releasing the accelerator pedal.
4. Repeat steps 2 and 3 for five times.
5. Stop the vehicle and turn ignition switch OFF.
6. Wait at least 10 seconds and restart engine.
7. Repeat steps 2 and 3 for five times.
8. Stop the vehicle and connect GST to the vehicle.
9. Make sure that no 1st trip DTC is displayed.
   If 1st trip DTC is displayed, go to EC-782, "Diagnosis Procedure".

Wiring Diagram

INFOID:0000000005285306

EC-A/F-01

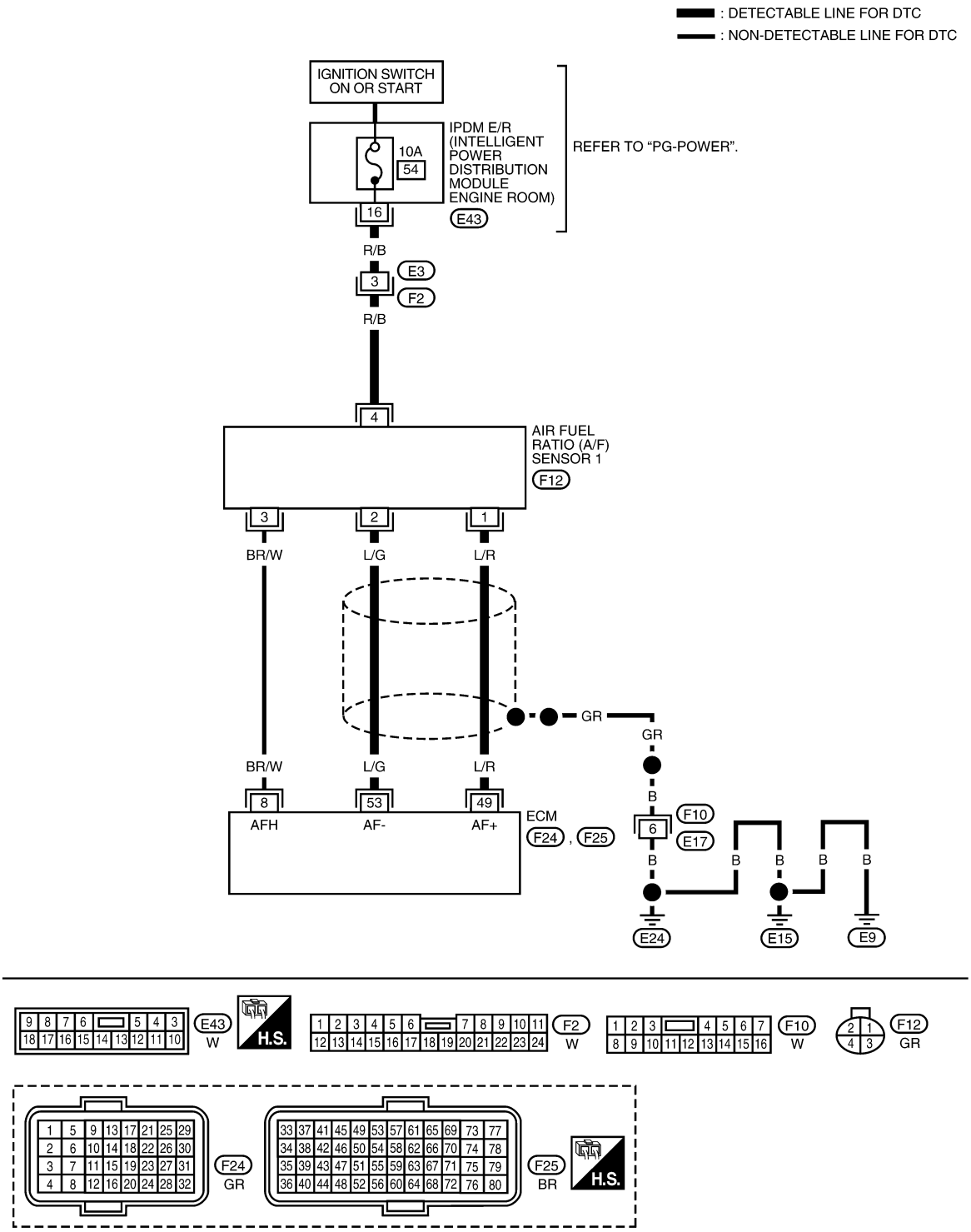

Specification data are reference values and are measured between each terminal and ground.
Pulse signal is measured by CONSULT-III.

CAUTION:

Do not use ECM ground terminals when measuring input/output voltage. Doing so may result in damage to the ECM's transistor. Use a ground other than ECM terminals, such as the ground.

TERMINAL NO.	WIRE COLOR	ITEM	CONDITION	DATA (DC Voltage)
8	BR/W	A/F sensor 1 heater	**[Engine is running]** • **Warm-up condition** • Idle speed (More than 140 seconds after starting engine)	Approximately 2.9 - 8.8 V★ 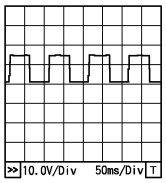 PBIA8148J
49	L/R	A/F sensor 1	**[Engine is running]** • **Warm-up condition** • Engine speed: 2,000 rpm	Approximately 1.8 V Output voltage varies with air fuel ratio.
53	L/G	A/F sensor 1	**[Ignition switch: ON]**	Approximately 2.2 V

★: Average voltage for pulse signal (Actual pulse signal can be confirmed by oscilloscope.)

Diagnosis Procedure

INFOID:0000000005285307

1. CHECK GROUND CONNECTIONS

1. Turn ignition switch OFF.
2. Loosen and retighten ground screws on the body.
   Refer to EC-711, "Ground Inspection".

- ⇦: Vehicle front
- Body ground (1)

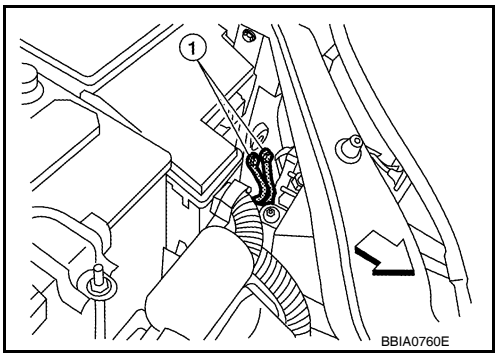

OK or NG

OK >> GO TO 2.
NG >> Repair or replace ground connections.

2. CHECK AIR FUEL RATIO (A/F) SENSOR 1 POWER SUPPLY CIRCUIT

1. Disconnect A/F sensor 1 harness connector (1).
2. Turn ignition switch ON.

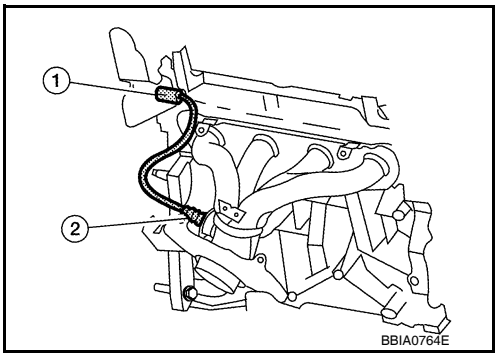

3. Check voltage between A/F sensor 1 terminal 4 and ground with CONSULT-III or tester.

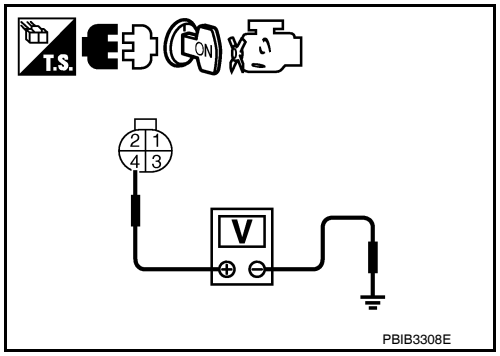

Voltage: Battery voltage

OK or NG

OK >> GO TO 4.
NG >> GO TO 3.

3. DETECT MALFUNCTIONING PART

Check the following.
- Harness connectors E3, F2
- 10 A fuse
- Harness for open or short between A/F sensor 1 and fuse

>> Repair or replace harness or connectors.

4. CHECK A/F SENSOR 1 INPUT SIGNAL CIRCUIT FOR OPEN AND SHORT

1. Turn ignition switch OFF.
2. Disconnect ECM harness connector.
3. Check harness continuity between the following terminals. Refer to Wiring Diagram.

A/F sensor 1 terminal	ECM terminal
1	49
2	53

Continuity should exist.

4. Check harness continuity between ECM terminals 49, 53 or A/F sensor 1 terminals 1, 2 and ground. Refer to Wiring Diagram.

Continuity should not exist.

5. Also check harness for short to power.

OK or NG

OK >> GO TO 5.
NG >> Repair open circuit or short to ground or short to power in harness or connectors.

5. CHECK INTERMITTENT INCIDENT

Perform EC-706.

OK or NG

OK >> GO TO 6.
NG >> Repair or replace.

6. REPLACE AIR FUEL RATIO (A/F) SENSOR 1

Replace air fuel ratio (A/F) sensor 1.

CAUTION:
- **Discard any A/F sensor which has been dropped from a height of more than 0.5 m (19.7 in) onto a hard surface such as a concrete floor; use a new one.**
- **Before installing new A/F sensor, clean exhaust system threads using Oxygen Sensor Thread Cleaner tool J-43897-18 or J-43897-12 and approved anti-seize lubricant.**

>> **INSPECTION END**

Removal and Installation

INFOID:0000000005285308

AIR FUEL RATIO SENSOR

Refer to EM-23.

DTC P0131 A/F SENSOR 1

Component Description

INFOID:0000000005285309

The air fuel ratio (A/F) sensor 1 is a planar one-cell limit current sensor. The sensor element of the A/F sensor 1 is composed an electrode layer, which transports ions. It has a heater in the element.
The sensor is capable of precise measurement λ = 1, but also in the lean and rich range. Together with its control electronics, the sensor outputs a clear, continuous signal throughout a wide λ range.
The exhaust gas components diffuse through the diffusion layer at the sensor cell. An electrode layer is applied voltage, and this current relative oxygen density in lean. Also this current relative hydrocarbon density in rich.
Therefore, the A/F sensor 1 is able to indicate air fuel ratio by this electrode layer of current. In addition, a heater is integrated in the sensor to ensure the required operating temperature of about 800°C (1,472°F).

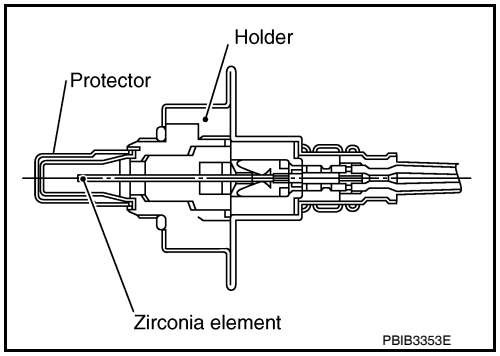

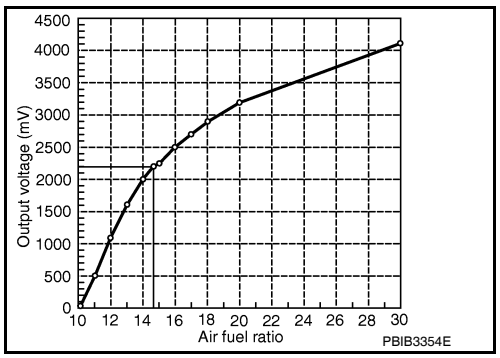

CONSULT-III Reference Value in Data Monitor Mode

INFOID:0000000005285310

Specification data are reference values.

Monitor item	Condition		Specification
A/F SEN1 (B1)	• Engine: After warming up	Maintaining engine speed at 2,000 rpm	Fluctuates around 2.2 V

On Board Diagnosis Logic

INFOID:0000000005285311

To judge the malfunction, the diagnosis checks that the A/F signal computed by ECM from the air fuel ratio (A/F) sensor 1 signal is not inordinately low.

DTC No.	Trouble diagnosis name	DTC detecting condition	Possible Cause
P0131 0131	Air fuel ratio (A/F) sensor 1 circuit low voltage	The A/F signal computed by ECM from the A/F sensor 1 signal is constantly approx. 0 V.	• Harness or connectors [Air fuel ratio (A/F) sensor circuit is open or shorted.] • Air fuel ratio (A/F) sensor 1

DTC Confirmation Procedure

INFOID:0000000005285312

NOTE:
If DTC Confirmation Procedure has been previously conducted, always turn ignition switch OFF and wait at least 10 seconds before conducting the next test.
TESTING CONDITION:
Before performing the following procedure, confirm that battery voltage is more than 10.5 V at idle.

WITH CONSULT-III

1. Start engine and warm it up to normal operating temperature.
2. Select “A/F SEN1 (B1)” in “DATA MONITOR” mode with CONSULT-III.
3. Check “A/F SEN1 (B1)” indication.
   If the indication is constantly approx. 0 V, go to EC-788, "Diagnosis Procedure".

If the indication is not constantly approx. 0 V, go to next step.

4. Turn ignition switch OFF, wait at least 10 seconds and then restart engine.
5. Drive and accelerate vehicle to more than 40 km/h (25 MPH) within 20 seconds after restarting engine.
6. Maintain the following conditions for about 20 consecutive seconds.

ENG SPEED	1,000 - 3,200 rpm
VHCL SPEED SE	More than 40 km/h (25 MPH)
B/FUEL SCHDL	1.5 - 9.0 msec
Shift lever	Suitable position

NOTE:
- **Keep the accelerator pedal as steady as possible during the cruising.**
- **If this procedure is not completed within 1 minute after restarting engine at step 4, return to step 4.**

7. Check 1st trip DTC.
8. If 1st trip DTC is displayed, go to EC-788, "Diagnosis Procedure".

WITH GST

Follow the procedure “WITH CONSULT-III” above.

Wiring Diagram

INFOID:0000000005285313

EC-A/F-01

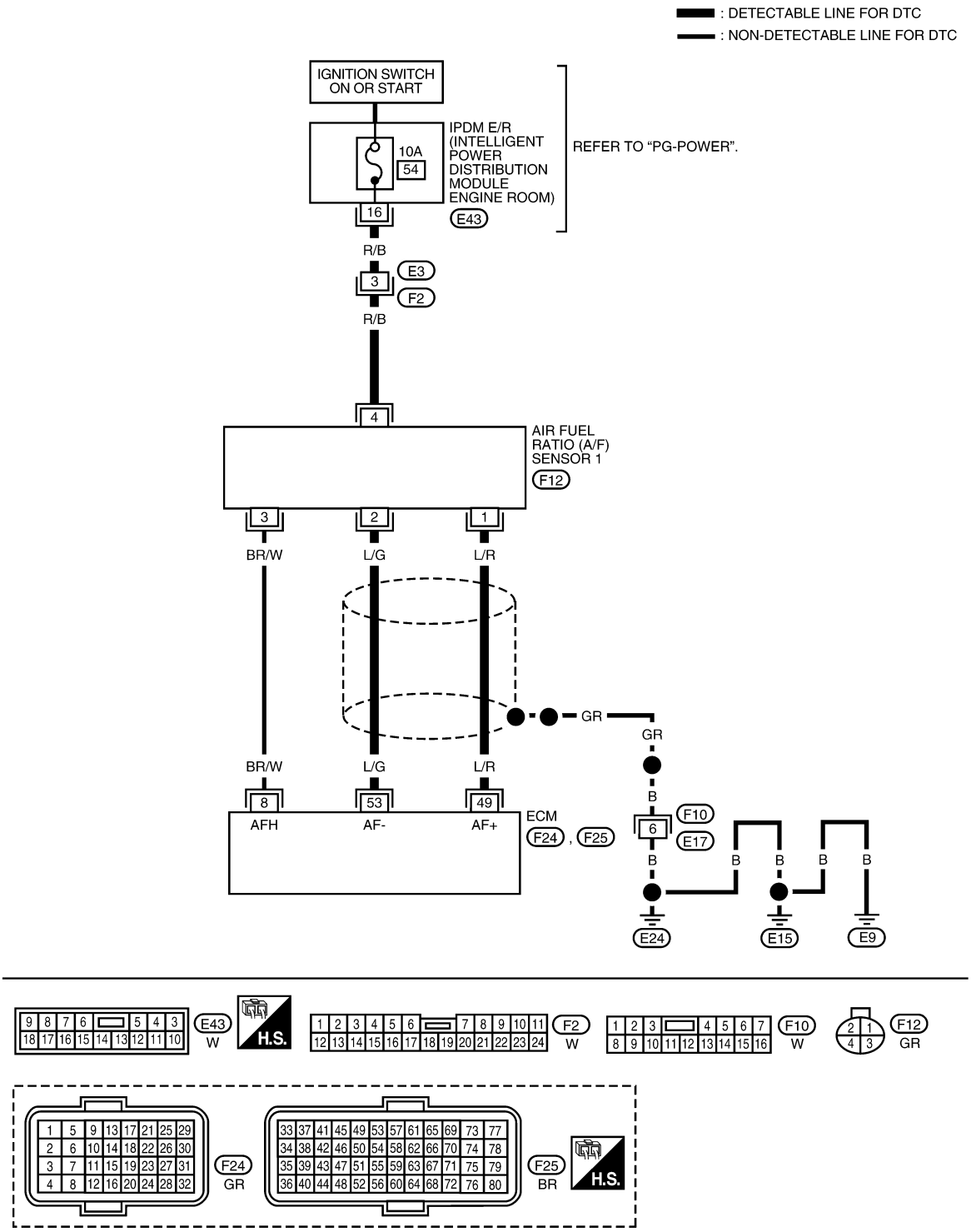

Specification data are reference values and are measured between each terminal and ground.
Pulse signal is measured by CONSULT-III.

CAUTION:

Do not use ECM ground terminals when measuring input/output voltage. Doing so may result in damage to the ECM's transistor. Use a ground other than ECM terminals, such as the ground.

TERMINAL NO.	WIRE COLOR	ITEM	CONDITION	DATA (DC Voltage)
8	BR/W	A/F sensor 1 heater	**[Engine is running]** • **Warm-up condition** • Idle speed (More than 140 seconds after starting engine)	Approximately 2.9 - 8.8 V★ 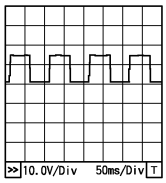 PBIA8148J
49	L/R	A/F sensor 1	**[Engine is running]** • **Warm-up condition** • Engine speed: 2,000 rpm	Approximately 1.8 V Output voltage varies with air fuel ratio.
53	L/G	A/F sensor 1	**[Ignition switch: ON]**	Approximately 2.2 V

★: Average voltage for pulse signal (Actual pulse signal can be confirmed by oscilloscope.)

Diagnosis Procedure

INFOID:0000000005285314

1. CHECK GROUND CONNECTIONS

1. Turn ignition switch OFF.
2. Loosen and retighten ground screws on the body.
   Refer to EC-711, "Ground Inspection".

- ⇦: Vehicle front
- Body ground (1)

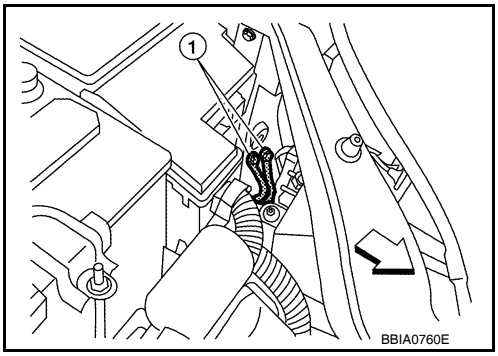

BBIA0760E

OK or NG

OK >> GO TO 2.
NG >> Repair or replace ground connections.

2. CHECK AIR FUEL RATIO (A/F) SENSOR 1 POWER SUPPLY CIRCUIT

1. Disconnect A/F sensor 1 harness connector (1).
2. Turn ignition switch ON.

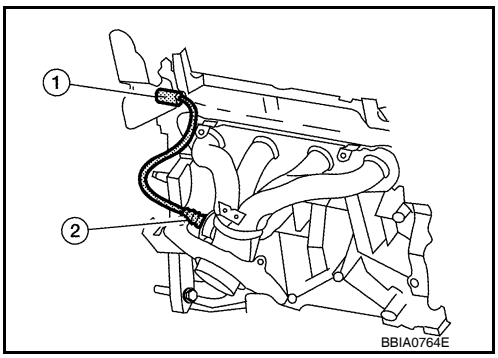

BBIA0764E

3. Check voltage between A/F sensor 1 terminal 4 and ground with CONSULT-III or tester.

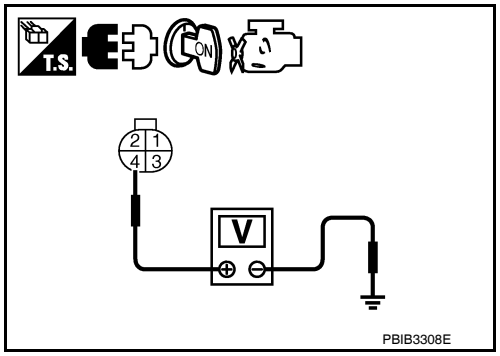

Voltage: Battery voltage

OK or NG

OK >> GO TO 4.
NG >> GO TO 3.

3. DETECT MALFUNCTIONING PART

Check the following.
- Harness connectors E3, F2
- 10 A fuse
- Harness for open or short between A/F sensor 1 and fuse

>> Repair or replace harness or connectors.

4. CHECK A/F SENSOR 1 INPUT SIGNAL CIRCUIT FOR OPEN AND SHORT

1. Turn ignition switch OFF.
2. Disconnect ECM harness connector.
3. Check harness continuity between the following terminals. Refer to Wiring Diagram.

A/F sensor 1 terminal	ECM terminal
1	49
2	53

Continuity should exist.

4. Check harness continuity between ECM terminals 49, 53 or A/F sensor 1 terminals 1, 2 and ground. Refer to Wiring Diagram.

Continuity should not exist.

5. Also check harness for short to power.

OK or NG

OK >> GO TO 5.
NG >> Repair open circuit or short to ground or short to power in harness or connectors.

5. CHECK INTERMITTENT INCIDENT

Perform EC-706.

OK or NG

OK >> GO TO 6.
NG >> Repair or replace.

6. REPLACE AIR FUEL RATIO (A/F) SENSOR 1

Replace air fuel ratio (A/F) sensor 1.

CAUTION:
- **Discard any A/F sensor which has been dropped from a height of more than 0.5 m (19.7 in) onto a hard surface such as a concrete floor; use a new one.**
- **Before installing new A/F sensor, clean exhaust system threads using Oxygen Sensor Thread Cleaner tool J-43897-18 or J-43897-12 and approved anti-seize lubricant.**

>> **INSPECTION END**

Removal and Installation

INFOID:0000000005285315

AIR FUEL RATIO SENSOR

Refer to EM-23.

DTC P0132 A/F SENSOR 1

Component Description

INFOID:0000000005285316

The air fuel ratio (A/F) sensor 1 is a planar one-cell limit current sensor. The sensor element of the A/F sensor 1 is composed an electrode layer, which transports ions. It has a heater in the element.
The sensor is capable of precise measurement λ = 1, but also in the lean and rich range. Together with its control electronics, the sensor outputs a clear, continuous signal throughout a wide λ range.
The exhaust gas components diffuse through the diffusion layer at the sensor cell. An electrode layer is applied voltage, and this current relative oxygen density in lean. Also this current relative hydrocarbon density in rich.
Therefore, the A/F sensor 1 is able to indicate air fuel ratio by this electrode layer of current. In addition, a heater is integrated in the sensor to ensure the required operating temperature of about 800°C (1,472°F).

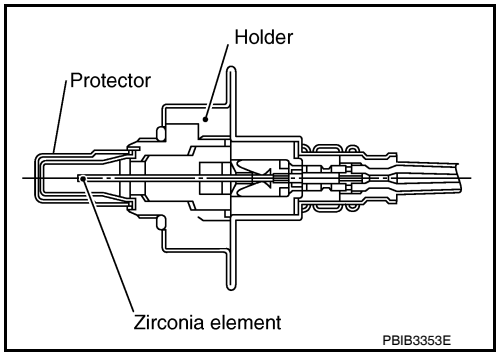

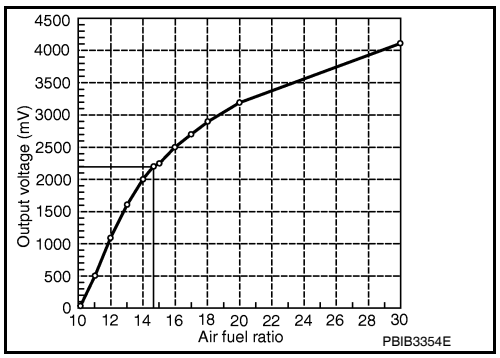

CONSULT-III Reference Value in Data Monitor Mode

INFOID:0000000005285317

Specification data are reference values.

Monitor item	Condition		Specification
A/F SEN1 (B1)	• Engine: After warming up	Maintaining engine speed at 2,000 rpm	Fluctuates around 2.2 V

On Board Diagnosis Logic

INFOID:0000000005285318

To judge the malfunction, the diagnosis checks that the A/F signal computed by ECM from the air fuel ratio (A/F) sensor 1 signal is not inordinately high.

DTC No.	Trouble diagnosis name	DTC detecting condition	Possible Cause
P0132 0132	Air fuel ratio (A/F) sensor 1 circuit high voltage	The A/F signal computed by ECM from the A/F sensor 1 signal is constantly approx. 5 V.	• Harness or connectors [Air fuel ratio (A/F) sensor circuit is open or shorted.] • Air fuel ratio (A/F) sensor 1

DTC Confirmation Procedure

INFOID:0000000005285319

NOTE:
If DTC Confirmation Procedure has been previously conducted, always turn ignition switch OFF and wait at least 10 seconds before conducting the next test.
TESTING CONDITION:
Before performing the following procedure, confirm that battery voltage is more than 10.5 V at idle.

WITH CONSULT-III

1. Start engine and warm it up to normal operating temperature.
2. Select “A/F SEN1 (B1)” in “DATA MONITOR” mode with CONSULT-III.
3. Check “A/F SEN1 (B1)” indication.
   If the indication is constantly approx. 5 V, go to EC-794, "Diagnosis Procedure".

If the indication is not constantly approx. 5 V, go to next step.

4. Turn ignition switch OFF, wait at least 10 seconds and then restart engine.
5. Drive and accelerate vehicle to more than 40 km/h (25 MPH) within 20 seconds after restarting engine.
6. Maintain the following conditions for about 20 consecutive seconds.

ENG SPEED	1,000 - 3,200 rpm
VHCL SPEED SE	More than 40 km/h (25 MPH)
B/FUEL SCHDL	1.5 - 9.0 msec
Shift lever	Suitable position

NOTE:
- **Keep the accelerator pedal as steady as possible during the cruising.**
- **If this procedure is not completed within 1 minute after restarting engine at step 4, return to step 4.**

7. Check 1st trip DTC.
8. If 1st trip DTC is displayed, go to EC-794, "Diagnosis Procedure".

WITH GST

Follow the procedure “WITH CONSULT-III” above.

Wiring Diagram

INFOID:0000000005285320

EC-A/F-01

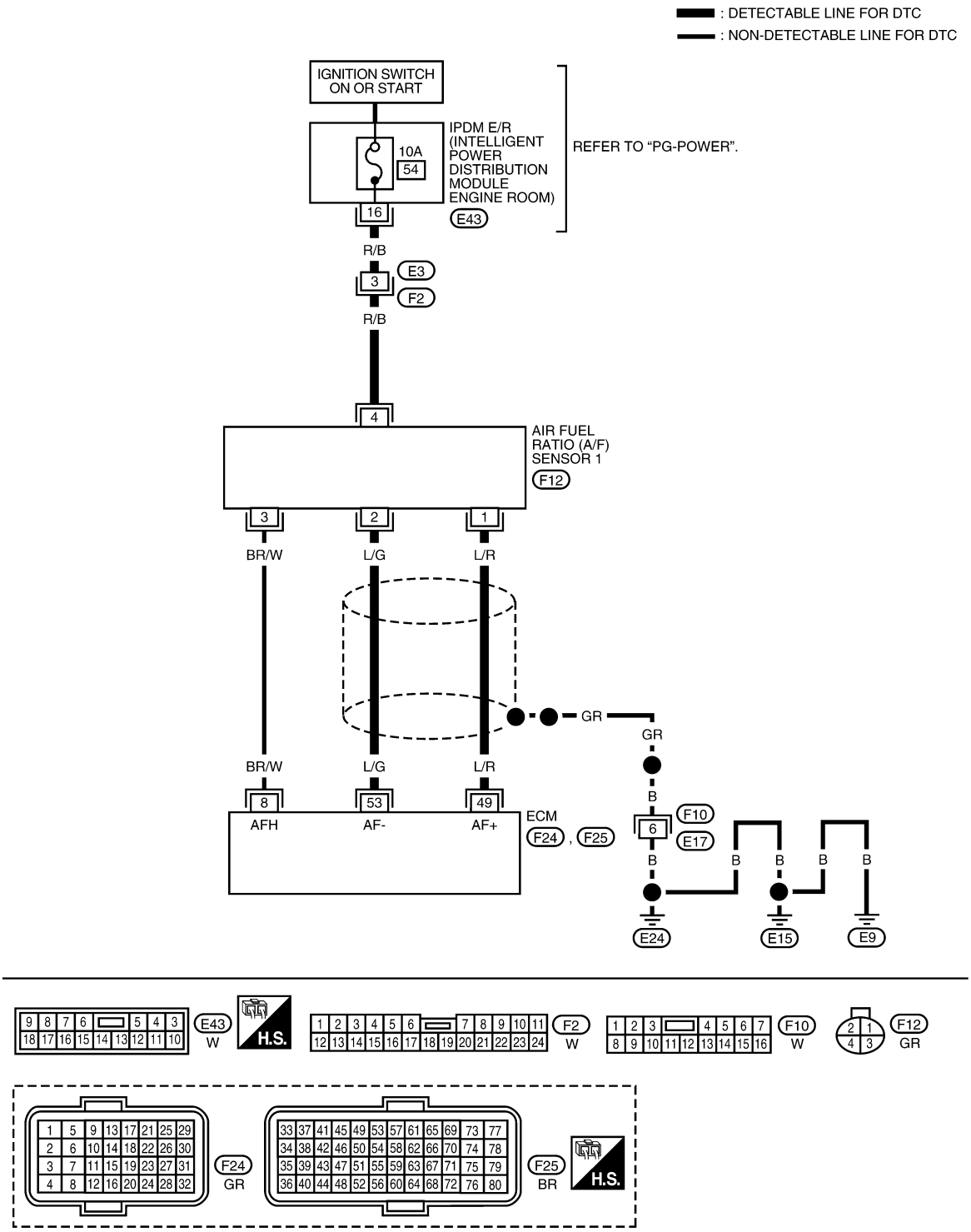

Specification data are reference values and are measured between each terminal and ground.
Pulse signal is measured by CONSULT-III.

CAUTION:

Do not use ECM ground terminals when measuring input/output voltage. Doing so may result in damage to the ECM's transistor. Use a ground other than ECM terminals, such as the ground.

TERMINAL NO.	WIRE COLOR	ITEM	CONDITION	DATA (DC Voltage)
8	BR/W	A/F sensor 1 heater	**[Engine is running]** • **Warm-up condition** • Idle speed (More than 140 seconds after starting engine)	Approximately 2.9 - 8.8 V★ 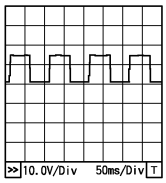 PBIA8148J
49	L/R	A/F sensor 1	**[Engine is running]** • **Warm-up condition** • Engine speed: 2,000 rpm	Approximately 1.8 V Output voltage varies with air fuel ratio.
53	L/G	A/F sensor 1	**[Ignition switch: ON]**	Approximately 2.2 V

★: Average voltage for pulse signal (Actual pulse signal can be confirmed by oscilloscope.)

Diagnosis Procedure

INFOID:0000000005285321

1. CHECK GROUND CONNECTIONS

1. Turn ignition switch OFF.
2. Loosen and retighten three ground screws on the body.
   Refer to EC-711, "Ground Inspection".

- ⇦: Vehicle front
- Body ground (1)

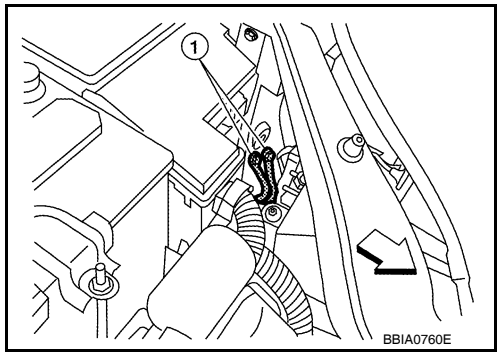

OK or NG

OK >> GO TO 2.
NG >> Repair or replace ground connections.

2. CHECK AIR FUEL RATIO (A/F) SENSOR 1 POWER SUPPLY CIRCUIT

1. Disconnect A/F sensor 1 harness connector (1).
2. Turn ignition switch ON.

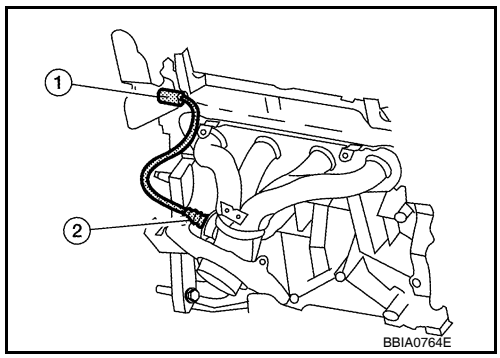

3. Check voltage between A/F sensor 1 terminal 4 and ground with CONSULT-III or tester.

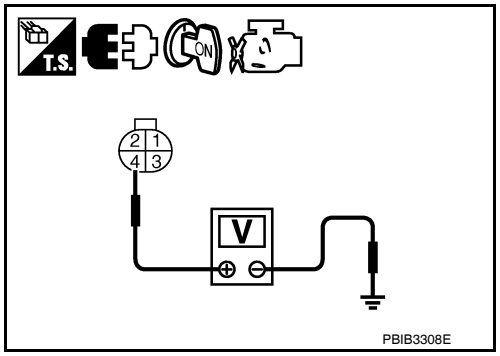

Voltage: Battery voltage

OK or NG

OK >> GO TO 4.
NG >> GO TO 3.

3. DETECT MALFUNCTIONING PART

Check the following.
- Harness connectors E3, F2
- 10 A fuse
- Harness for open or short between A/F sensor 1 and fuse

>> Repair or replace harness or connectors.

4. CHECK A/F SENSOR 1 INPUT SIGNAL CIRCUIT FOR OPEN AND SHORT

1. Turn ignition switch OFF.
2. Disconnect ECM harness connector.
3. Check harness continuity between the following terminals. Refer to Wiring Diagram.

A/F sensor 1 terminal	ECM terminal
1	49
2	53

Continuity should exist.

4. Check harness continuity between ECM terminals 49, 53 or A/F sensor 1 terminals 1, 2 and ground. Refer to Wiring Diagram.

Continuity should not exist.

5. Also check harness for short to power.

OK or NG

OK >> GO TO 5.
NG >> Repair open circuit or short to ground or short to power in harness or connectors.

5. CHECK INTERMITTENT INCIDENT

Perform EC-706.

OK or NG

OK >> GO TO 6.
NG >> Repair or replace.

6. REPLACE AIR FUEL RATIO (A/F) SENSOR 1

Replace air fuel ratio (A/F) sensor 1.

CAUTION:
- **Discard any A/F sensor which has been dropped from a height of more than 0.5 m (19.7 in) onto a hard surface such as a concrete floor; use a new one.**
- **Before installing new A/F sensor, clean exhaust system threads using Oxygen Sensor Thread Cleaner tool J-43897-18 or J-43897-12 and approved anti-seize lubricant.**

>> **INSPECTION END**

Removal and Installation

INFOID:0000000005285322

AIR FUEL RATIO SENSOR

Refer to EM-23.

DTC P0133 A/F SENSOR 1

Component Description

INFOID:0000000005285323

The air fuel ratio (A/F) sensor 1 is a planar one-cell limit current sensor. The sensor element of the A/F sensor 1 is composed an electrode layer, which transports ions. It has a heater in the element.
The sensor is capable of precise measurement λ = 1, but also in the lean and rich range. Together with its control electronics, the sensor outputs a clear, continuous signal throughout a wide λ range.
The exhaust gas components diffuse through the diffusion layer at the sensor cell. An electrode layer is applied voltage, and this current relative oxygen density in lean. Also this current relative hydrocarbon density in rich.
Therefore, the A/F sensor 1 is able to indicate air fuel ratio by this electrode layer of current. In addition, a heater is integrated in the sensor to ensure the required operating temperature of about 800°C (1,472°F).

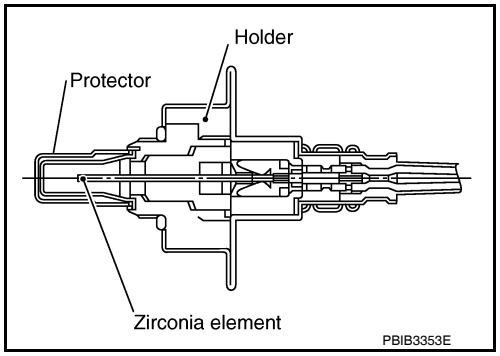

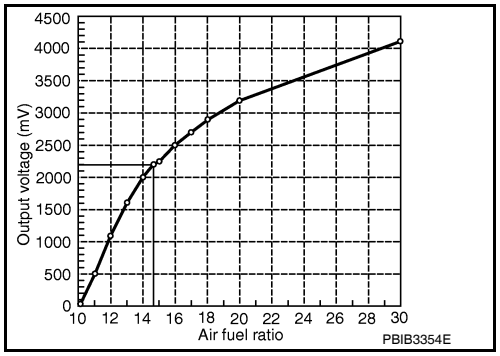

CONSULT-III Reference Value in Data Monitor Mode

INFOID:0000000005285324

Specification data are reference values.

Monitor item	Condition		Specification
A/F SEN1 (B1)	• Engine: After warming up	Maintaining engine speed at 2,000 rpm	Fluctuates around 2.2 V

On Board Diagnosis Logic

INFOID:0000000005285325

To judge the malfunction of air fuel ratio (A/F) sensor 1, this diagnosis measures response time of the A/F signal computed by ECM from the air fuel ratio (A/F) sensor 1 signal. The time is compensated by engine operating (speed and load), fuel feedback control constant, and the air fuel ratio (A/F) sensor 1 temperature index. Judgment is based on whether the compensated time (the A/F sensor 1 signal cycling time index) is inordinately long or not.

DTC No.	Trouble diagnosis name	DTC detecting condition	Possible Cause
P0133 0133	Air fuel ratio (A/F) sensor 1 circuit slow response	The response of the A/F signal computed by ECM from A/F sensor 1 signal takes more than the specified time.	• Harness or connectors [Air fuel ratio (A/F) sensor circuit is open or shorted.] • Air fuel ratio (A/F) sensor 1 • Air fuel ratio (A/F) sensor heater 1 • Fuel pressure • Fuel injector • Intake air leaks • Exhaust gas leaks • PCV valve • Mass air flow sensor

DTC Confirmation Procedure

INFOID:0000000005285326

NOTE:

If DTC Confirmation Procedure has been previously conducted, always turn ignition switch OFF and wait at least 10 seconds before conducting the next test.

TESTING CONDITION:

Before performing the following procedure, confirm that battery voltage is more than 11 V at idle.

WITH CONSULT-III

1. Start engine and warm it up to normal operating temperature.
2. Turn ignition switch OFF and wait at least 10 seconds.
3. Start engine and keep the engine speed between 3,500 and 4,000 rpm for at least 1minute under no load.
4. Let engine idle for 1 minute.
5. Select “A/F SEN1(B1) P1278/P1279” (for DTC P0133) of “A/F SEN1” in “DTC WORK SUPPORT” mode with CONSULT-III.
6. Touch “START”.
   If “COMPLETED” appears on CONSULT-III screen, go to step 10.
   If “COMPLETED” does not appear on CONSULT-III screen, go to the following step.
7. After perform the following procedure, “TESTING” will be displayed on the CONSULT-III screen.

a. Increase the engine speed up to 4,000 to 5,000 rpm and keep it for 10 seconds.
b. Fully release accelerator pedal and then let engine idle for about 10 seconds.
   If “TESTING” is not displayed after 10 seconds, refer to EC-698.

8. Wait for about 20 seconds at idle under the condition that “TESTING” is displayed on the CONSULT-III screen.
9. Make sure that “TESTING” changes to “COMPLETED”.
   If “TESTING” changed to “OUT OF CONDITION”, refer to EC-698.
10. Make sure that “OK” is displayed after touching “ON-BOARD DIAGNOSIS”.
    If “NG” is displayed, go to EC-800, "Diagnosis Procedure".

WITH GST

1. Start engine and warm it up to normal operating temperature.
2. Select Service $01 with GST.
3. Calculate the total value of “Short term fuel trim” and “Long term fuel trim” indications.
   Make sure that the total percentage should be within ±15%.
   If OK, go to the following step.
   If NG, check the following.
   - Intake air leaks
   - Exhaust gas leaks
   - Incorrect fuel pressure
   - Lack of fuel
   - Fuel injector
   - Incorrect PCV hose connection
   - PCV valve
   - Mass air flow sensor
4. Turn ignition switch OFF and wait at least 10 seconds.
5. Start engine and keep the engine speed between 3,500 and 4,000 rpm for at least 1minute under no load.
6. Let engine idle for 1 minute.
7. Increase the engine speed up to 4,000 to 5,000 rpm and keep it for 10 seconds.
8. Fully release accelerator pedal and then let engine idle for about 1 minute.
9. Select Service $07 with GST.
   If 1st trip DTC is detected, go to EC-800, "Diagnosis Procedure".

Wiring Diagram

INFOID:0000000005285327

EC-A/F-01

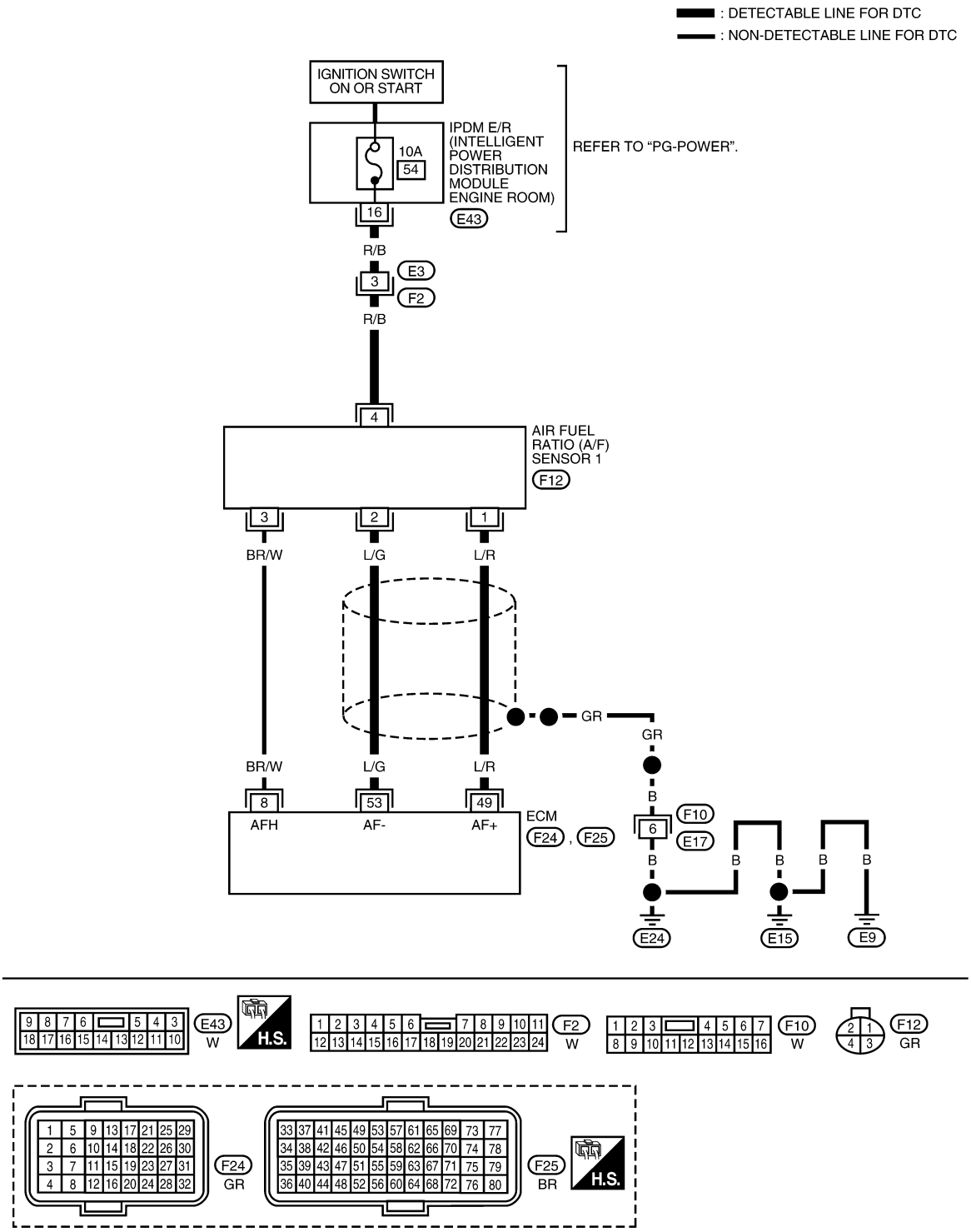

Specification data are reference values and are measured between each terminal and ground.
Pulse signal is measured by CONSULT-III.

CAUTION:

Do not use ECM ground terminals when measuring input/output voltage. Doing so may result in damage to the ECM's transistor. Use a ground other than ECM terminals, such as the ground.

TERMINAL NO.	WIRE COLOR	ITEM	CONDITION	DATA (DC Voltage)
8	BR/W	A/F sensor 1 heater	**[Engine is running]** • **Warm-up condition** • Idle speed (More than 140 seconds after starting engine)	Approximately 2.9 - 8.8 V★ 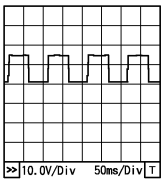 PBIA8148J
49	L/R	A/F sensor 1	**[Engine is running]** • **Warm-up condition** • Engine speed: 2,000 rpm	Approximately 1.8 V Output voltage varies with air fuel ratio.
53	L/G	A/F sensor 1	**[Ignition switch: ON]**	Approximately 2.2 V

★: Average voltage for pulse signal (Actual pulse signal can be confirmed by oscilloscope.)

Diagnosis Procedure

INFOID:0000000005285328

1. CHECK GROUND CONNECTIONS

1. Turn ignition switch OFF.
2. Loosen and retighten engine screws on the body.
   Refer to EC-711, "Ground Inspection".

- ⇦: Vehicle front
- Body ground (1)

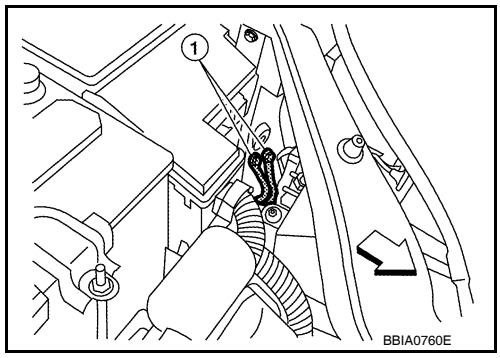

OK or NG

OK >> GO TO 2.
NG >> Repair or replace ground connections.

2. RETIGHTEN AIR FUEL RATIO (A/F) SENSOR 1

Loosen and retighten the air fuel ratio (A/F) sensor 1.
Refer to EM-24, "Removal and Installation".

>> GO TO 3.

3. CHECK EXHAUST GAS LEAK

1. Start engine and run it at idle.
2. Listen for an exhaust gas leak before three way catalyst (manifold).

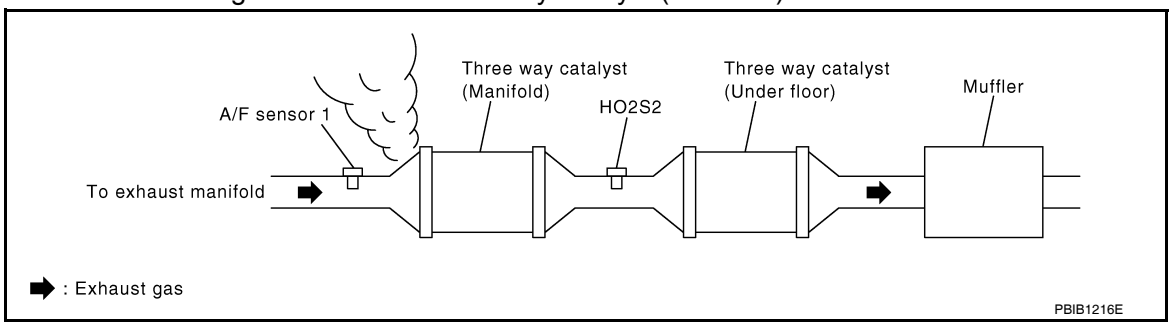

OK or NG

OK >> GO TO 4.
NG >> Repair or replace.

4. CHECK FOR INTAKE AIR LEAK

Listen for an intake air leak after the mass air flow sensor.

OK or NG

OK >> GO TO 5.
NG >> Repair or replace.

5. CLEAR THE SELF-LEARNING DATA

With CONSULT-III

1. Start engine and warm it up to normal operating temperature.
2. Select “SELF-LEARNING CONT” in “WORK SUPPORT” mode with CONSULT-III.
3. Clear the self-learning control coefficient by touching “CLEAR” or “START”.
4. Run engine for at least 10 minutes at idle speed.
   Is the 1st trip DTC P0171 or P0172 detected? Is it difficult to start engine?

Without CONSULT-III

1. Start engine and warm it up to normal operating temperature.
2. Turn ignition switch OFF.
3. Disconnect mass air flow sensor (1) harness connector, and restart and run engine for at least 5 seconds at idle speed.
4. Stop engine and reconnect mass air flow sensor harness connector.
5. Make sure DTC P0102 is displayed.
6. Erase the DTC memory. Refer to EC-617, "Emission-related Diagnostic Information".
7. Make sure DTC P0000 is displayed.
8. Run engine for at least 10 minutes at idle speed.
   Is the 1st trip DTC P0171 or P0172 detected? Is it difficult to start engine?

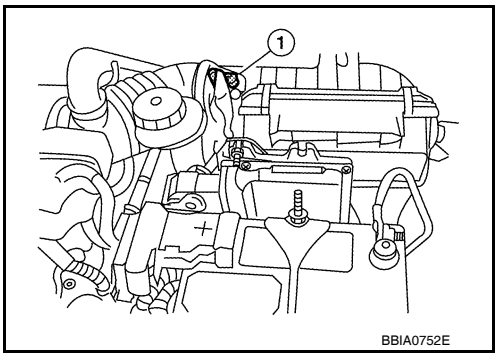

Yes or No

Yes >> Perform trouble diagnosis for DTC P0171, P0172. Refer to EC-828or EC-834.
No >> GO TO 6.

6. CHECK AIR FUEL RATIO (A/F) SENSOR 1 POWER SUPPLY CIRCUIT

1. Turn ignition switch OFF.
2. Disconnect A/F sensor 1 harness connector (1).
3. Turn ignition switch ON.

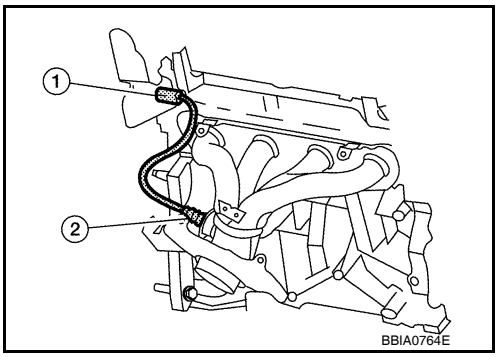

4. Check voltage between A/F sensor 1 terminal 4 and ground with CONSULT-III or tester.

Voltage: Battery voltage

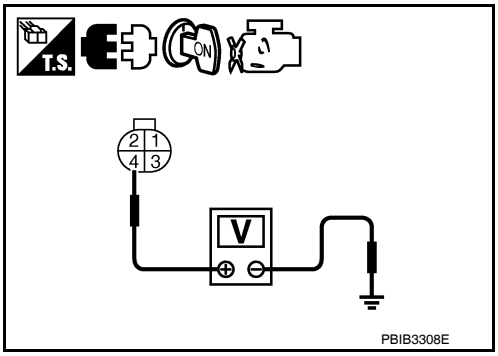

OK or NG

OK >> GO TO 8.
NG >> GO TO 7.

7. DETECT MALFUNCTIONING PART

Check the following.
- Harness connectors E3, F3
- 10 A fuse
- Harness for open or short between A/F sensor 1 and fuse

>> Repair or replace harness or connectors.

8. CHECK A/F SENSOR 1 INPUT SIGNAL CIRCUIT FOR OPEN AND SHORT

1. Turn ignition switch OFF.
2. Disconnect ECM harness connector.
3. Check harness continuity between the following terminals. Refer to Wiring Diagram.

A/F sensor 1 terminal	ECM terminal
1	49
2	53

Continuity should exist.

4. Check harness continuity between ECM terminals 49, 53 or A/F sensor 1 terminals 1, 2 and ground. Refer to Wiring Diagram.

Continuity should not exist.

5. Also check harness for short to power.

OK or NG

OK >> GO TO 9.
NG >> Repair open circuit or short to ground or short to power in harness or connectors.

9. CHECK AIR FUEL RATIO (A/F) SENSOR 1 HEATER

Refer to EC-726, "Component Inspection".

OK or NG

OK >> GO TO 10.
NG >> GO TO 13.

10. CHECK MASS AIR FLOW SENSOR

Refer to EC-745, "Component Inspection".

OK or NG

OK >> GO TO 11.
NG >> Replace mass air flow sensor.

11. CHECK PCV VALVE

Refer to EC-613, "Component Inspection".

OK or NG

OK >> GO TO 12.
NG >> Repair or replace PCV valve.

12. CHECK INTERMITTENT INCIDENT

Perform EC-706.

OK or NG

OK >> GO TO 13.
NG >> Repair or replace.

13. REPLACE AIR FUEL RATIO (A/F) SENSOR 1

Replace air fuel ratio (A/F) sensor 1.

CAUTION:

- **Discard any A/F sensor which has been dropped from a height of more than 0.5 m (19.7 in) onto a hard surface such as a concrete floor; use a new one.**
- **Before installing new A/F sensor, clean exhaust system threads using Oxygen Sensor Thread Cleaner tool J-43897-18 or J-43897-12 and approved anti-seize lubricant.**

>> **INSPECTION END**

Removal and Installation

INFOID:0000000005285329

AIR FUEL RATIO SENSOR

Refer to EM-23.

DTC P0137 HO2S2

Component Description

INFOID:0000000005522760

The heated oxygen sensor 2, after three way catalyst (manifold), monitors the oxygen level in the exhaust gas.
Even if switching characteristics of the air fuel ratio (A/F) sensor 1 are shifted, the air/fuel ratio is controlled to stoichiometric, by the signal from the heated oxygen sensor 2.
This sensor is made of ceramic zirconia. The zirconia generates voltage from approximately 1 V in richer conditions to 0 V in leaner conditions.
Under normal conditions the heated oxygen sensor 2 is not used for engine control operation.

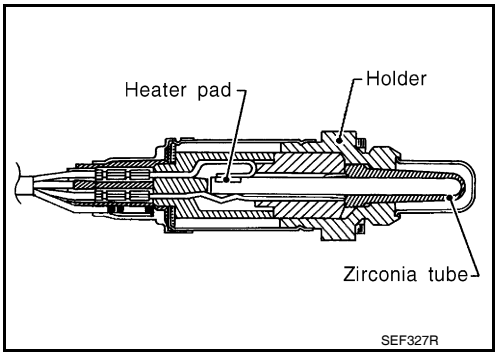

CONSULT-III Reference Value in Data Monitor Mode

INFOID:0000000005522761

Specification data are reference values.

Monitor item	Condition	Specification
HO2S2 (B1)	• Revving engine from idle to 3,000 rpm quickly after the following conditions are met. - Engine: After warming up - Keeping the engine speed between 3,500 and 4,000 rpm for 1 minute and at idle for 1 minute under no load	0 - 0.3 V ←→ Approx. 0.6 - 1.0 V
HO2S2 MNTR (B1)		LEAN ←→ RICH

On Board Diagnosis Logic

INFOID:0000000005522762

The heated oxygen sensor 2 has a much longer switching time between rich and lean than the air fuel ratio (A/F) sensor 1. The oxygen storage capacity before the three way catalyst (manifold) causes the longer switching time. To judge the malfunctions of heated oxygen sensor 2, ECM monitors whether the maximum voltage of the sensor is sufficiently high during the various driving condition such as fuel-cut.

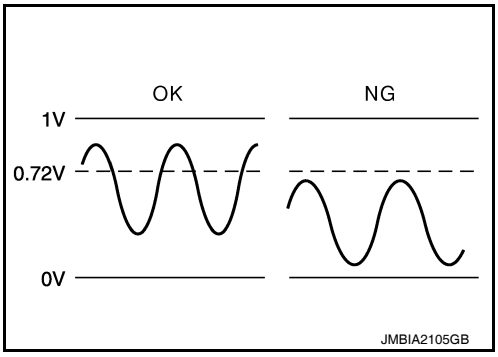

DTC No.	Trouble diagnosis name	DTC detecting condition	Possible cause
P0137 0137	Heated oxygen sensor 2 circuit low voltage	The maximum voltage from the sensor is not reached to the specified voltage.	• Harness or connectors (Heated oxygen sensor 2 circuit open or shorted.) • Heated oxygen sensor 2 • Fuel pressure • Fuel injector • Intake air leaks

DTC Confirmation Procedure

INFOID:0000000005522763

NOTE:
If DTC confirmation Procedure has been previously conducted, always turn ignition switch OFF and wait at least 10 seconds before conducting the next test.

WITH CONSULT-III
TESTING CONDITION:
For the best results, perform DTC WORK SUPPORT at a temperature of 0 to 30°C (32 to 86°F).

1. Turn ignition switch ON and select “DATA MONITOR” mode with CONSULT-III.
2. Start engine and warm it up to the normal operating temperature.
3. Turn ignition switch OFF and wait at least 10 seconds.
4. Start engine and keep the engine speed between 3,500 and 4,000 rpm for at least 1 minute under no load.
5. Let engine idle for 1 minute.
6. Make sure that “COOLAN TEMP/S” indicates more than 70°C (158°F).
   If not, warm up engine and go to next step when “COOLAN TEMP/S” indication reaches to 70°C (158°F).
7. Open engine hood.
8. Select “HO2S2 (B1) P1147” (for DTC P0137) of “HO2S2” in “DTC WORK SUPPORT” mode with CONSULT-III.
9. Following the instruction of CONSULT-III.
   NOTE:
   It will take at most 10 minutes until “COMPLETED” is displayed.
10. Make sure that “OK” is displayed after touching “ON-BOARD DIAGNOSIS”.
    If “NG” is displayed, refer to EC-807, "Diagnosis Procedure".
    If “CAN NOT BE DIAGNOSED” is displayed, perform the following.

a. Turn ignition switch OFF and leave the vehicle in a cool place (soak the vehicle).
b. Return to step 1.

Overall Function Check

INFOID:0000000005522764

Use this procedure to check the overall function of the heated oxygen sensor 2 circuit. During this check, a 1st trip DTC might not be confirmed.

WITH GST

1. Start engine and warm it up to the normal operating temperature.
2. Turn ignition switch OFF and wait at least 10 seconds.
3. Start engine and keep the engine speed between 3,500 and 4,000 rpm for at least 1 minute under no load.
4. Let engine idle 1 minute.
5. Set voltmeter probes between ECM terminal 50 (HO2S2 signal) and ground.
6. Check the voltage when revving up to 4,000 rpm under no load at least 10 times.
   (Depress and release accelerator pedal as soon as possible.)
   The voltage should be above 0.72 V at least once during this procedure.
   If the voltage can be confirmed in step 6, step 7 is not necessary.
7. Keep vehicle idling for 10 minutes, then check the voltage. Or check the voltage when coasting from 80 km/h (50 MPH) in D position (CVT) or 3rd gear position (M/T).
   The voltage should be above 0.72 V at least once during this procedure.
8. If NG, go to EC-807, "Diagnosis Procedure".

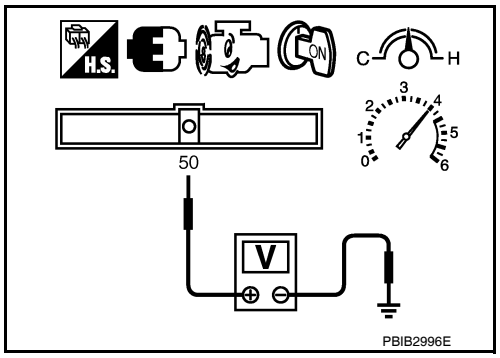

Wiring Diagram

INFOID:0000000005285335

EC-HO2S2-01

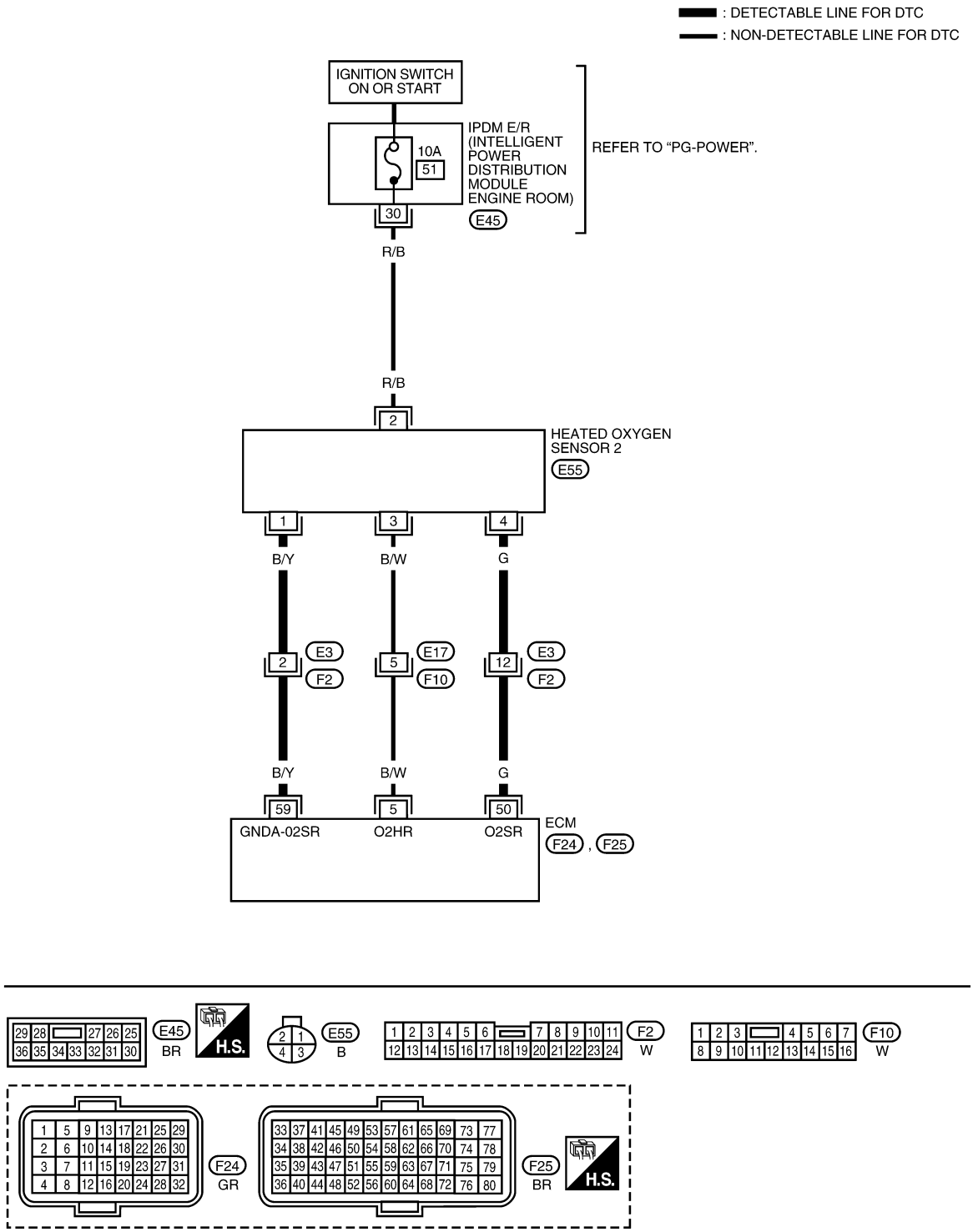

Specification data are reference values and are measured between each terminal and ground.
Pulse signal is measured by CONSULT-III.

CAUTION:

Do not use ECM ground terminals when measuring input/output voltage. Doing so may result in damage to the ECM's transistor. Use a ground other than ECM terminals, such as the ground.

TERMINAL NO.	WIRE COLOR	ITEM	CONDITION	DATA (DC Voltage)
5	B/W	Heated oxygen sensor 2 heater	**[Engine is running]** • Engine speed: Below 3,600 rpm after the following conditions are met. - Engine: After warming up - Keeping the engine speed between 3,500 and 4,000 rpm for 1 minute and at idle for 1 minute under no load.	Approximately 10 V★ 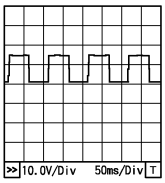 PBIA8148J
			[Ignition switch: ON] • Engine stopped **[Engine is running]** • Engine speed: Above 3,600 rpm.	BATTERY VOLTAGE (11 - 14 V)
50	G	Heated oxygen sensor 2	**[Engine is running]** • Revving engine from idle to 3,000 rpm quickly after the following conditions are met. - Engine: After warming up - Keeping the engine speed between 3,500 and 4,000 rpm for 1 minute and at idle for 1 minute under no load.	0 - Approximately 1.0 V
59	B/Y	Sensor ground (Heated oxygen sensor 2)	**[Engine is running]** • **Warm-up condition** • Idle speed	Approximately 0 V

★: Average voltage for pulse signal (Actual pulse signal can be confirmed by oscilloscope.)

Diagnosis Procedure

INFOID:0000000005522766

1. CHECK GROUND CONNECTIONS

1. Turn ignition switch OFF.
2. Loosen and retighten ground screw on the body.
   Refer to EC-157, "Ground Inspection".

- ⇦ : Vehicle front
- Body ground (1)

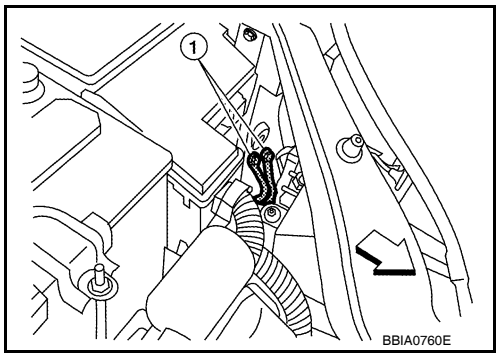

OK or NG

OK >> GO TO 2.
NG >> Repair or replace ground connections.

2. CLEAR THE SELF-LEARNING DATA

With CONSULT-III

1. Start engine and warm it up to normal operating temperature.
2. Select “SELF-LEARNING CONT” in “WORK SUPPORT” mode with CONSULT-III.
3. Clear the self-learning control coefficient by touching “CLEAR”.
4. Run engine for at least 10 minutes at idle speed.
   Is the 1st trip DTC P0171 detected?
   Is it difficult to start engine?

Without CONSULT-III

1. Start engine and warm it up to normal operating temperature.
2. Turn ignition switch OFF.

3. Disconnect mass air flow sensor (1) harness connector, and restart and run engine for at least 5 seconds at idle speed.
4. Stop engine and reconnect mass air flow sensor harness connector.
5. Make sure DTC P0102 is displayed.
6. Erase the DTC memory. Refer to EC-62, "Emission-related Diagnostic Information".
7. Make sure DTC P0000 is displayed.
8. Run engine for at least 10 minutes at idle speed.
Is the 1st trip DTC P0171 detected?
Is it difficult to start engine?

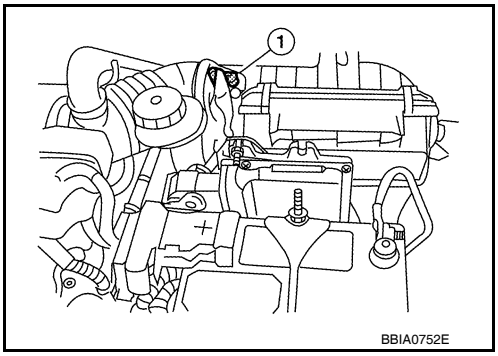

Yes or No

Yes >> Perform trouble diagnosis for DTC P0171. Refer to EC-275.
No >> GO TO 3.

3. CHECK HO2S2 GROUND CIRCUIT FOR OPEN AND SHORT

1. Turn ignition switch OFF.
2. Disconnect heated oxygen sensor 2 harness connector (2).
- ⇦ : Vehicle front
- Heated oxygen sensor 2 (1)
3. Disconnect ECM harness connector.
4. Check harness continuity between ECM terminal 59 and HO2S2 terminal 1. Refer to Wiring Diagram.

Continuity should exist.

5. Also check harness for short to ground and short to power.

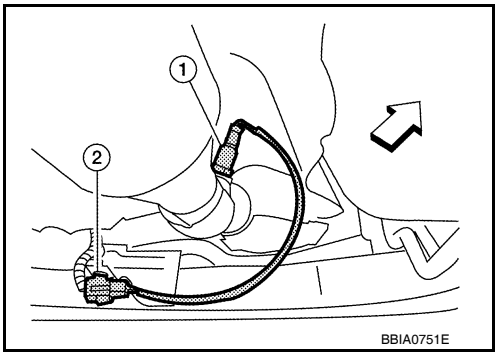

OK or NG

OK >> GO TO 5.
NG >> GO TO 4.

4. DETECT MALFUNCTIONING PART

Check the following.
- Harness connectors E3, F2
- Harness for open circuit or short between heated oxygen sensor 2 and ECM.

>> Repair open circuit or short to ground or short to power in harness or connectors.

5. CHECK HO2S2 INPUT SIGNAL CIRCUIT FOR OPEN AND SHORT

1. Check harness continuity between ECM terminal 50 and HO2S2 terminal 4. Refer to Wiring Diagram.

Continuity should exist.

2. Check harness continuity between ECM terminal 50 or HO2S2 terminal 4 and ground. Refer to Wiring Diagram.

Continuity should not exist.

3. Also check harness for short to power.

OK or NG

OK >> GO TO 7.
NG >> GO TO 6.

6. DETECT MALFUNCTIONING PART

Check the following.
- Harness connectors E3, F2
- Harness for open circuit or short between heated oxygen sensor 2 and ECM.

>> Repair open circuit or short to ground or short between heated oxygen sensor 2 and ECM.

7. CHECK HEATED OXYGEN SENSOR 2

Refer to EC-809, "Component Inspection".

OK or NG

OK >> GO TO 6.
NG >> Replace heated oxygen sensor 2.

8. CHECK INTERMITTENT INCIDENT

Refer to EC-152.

>> **INSPECTION END**

Component Inspection

INFOID:0000000005522767

HEATED OXYGEN SENSOR 2

WITH CONSULT-III

1. Start engine and warm it up to the normal operating temperature.
2. Turn ignition switch OFF and wait at least 10 seconds.
3. Start engine and keep the engine speed between 3,500 and 4,000 rpm for at least 1 minute under no load.
4. Let engine idle for 1 minute.
5. Select “FUEL INJECTION” in “ACTIVE TEST” mode, and select “HO2S2 (B1)” as the monitor item with CONSULT-III.
6. Check “HO2S2 (B1)” at idle speed when adjusting “FUEL INJECTION” to ±25%.

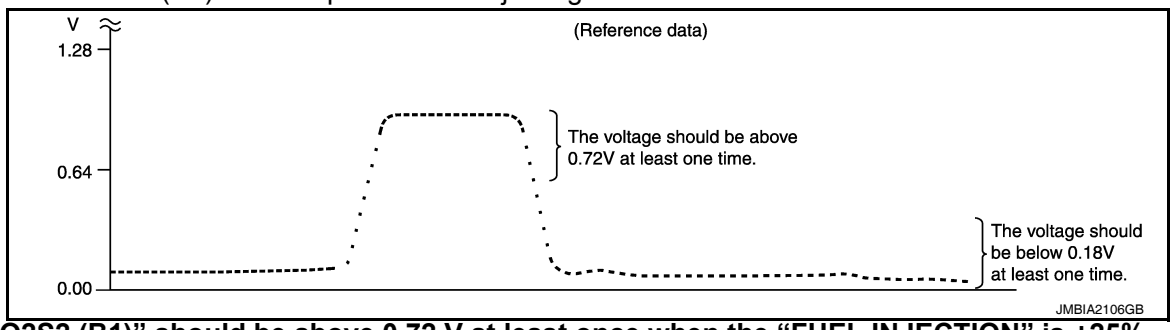

“HO2S2 (B1)” should be above 0.72 V at least once when the “FUEL INJECTION” is +25%.
“HO2S2 (B1)” should be below 0.18 V at least once when the “FUEL INJECTION” is –25%.

CAUTION:

- **Discard any heated oxygen sensor which has been dropped from a height of more than 0.5 m (19.7 in) onto a hard surface such as a concrete floor; use a new one.**
- **Before installing new oxygen sensor, clean exhaust system threads using Oxygen Sensor Thread Cleaner tool J-43897-18 or J-43897-12 and approved anti-seize lubricant.**

WITHOUT CONSULT-III

1. Start engine and warm it up to the normal operating temperature.
2. Turn ignition switch OFF and wait at least 10 seconds.
3. Start engine and keep the engine speed between 3,500 and 4,000 rpm for at least 1 minute under no load.
4. Let engine idle for 1 minute.
5. Set voltmeter probes between ECM terminal 50 (HO2S2 signal) and ground.

6. Check the voltage when revving up to 4,000 rpm under no load at least 10 times.
   (Depress and release accelerator pedal as soon as possible.)
   The voltage should be above 0.72 V and below 0.18 V at least once during this procedure.
   If the voltage can be confirmed at step 6, step 7 is not necessary.
7. Keep vehicle idling for 10 minutes, then check voltage. Or check the voltage when coasting from 80 km/h (50 MPH) in D position (CVT) or 3rd gear position (M/T).
   The voltage should be above 0.72 V and below 0.18 V at least once during this procedure.

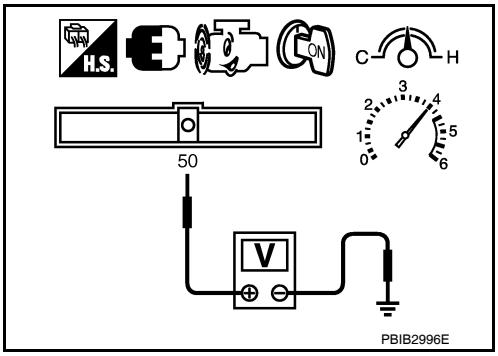

8. If NG, replace heated oxygen sensor 2.
   CAUTION:
   - **Discard any heated oxygen sensor which has been dropped from a height of more than 0.5 m (19.7 in) onto a hard surface such as a concrete floor; use a new one.**
   - **Before installing new oxygen sensor, clean exhaust system threads using Oxygen Sensor Thread Cleaner tool J-43897-18 or J-43897-12 and approved anti-seize lubricant.**

Removal and Installation

INFOID:0000000005522768

HEATED OXYGEN SENSOR 2

Refer to EM-23.

DTC P0138 HO2S2

Component Description

INFOID:0000000005285339

The heated oxygen sensor 2, after three way catalyst (manifold), monitors the oxygen level in the exhaust gas.
Even if switching characteristics of the air fuel ratio (A/F) sensor 1 are shifted, the air/fuel ratio is controlled to stoichiometric, by the signal from the heated oxygen sensor 2.
This sensor is made of ceramic zirconia. The zirconia generates voltage from approximately 1 V in richer conditions to 0 V in leaner conditions.
Under normal conditions the heated oxygen sensor 2 is not used for engine control operation.

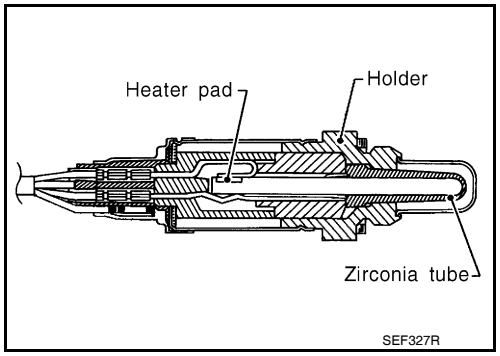

CONSULT-III Reference Value in Data Monitor Mode

INFOID:0000000005285340

Specification data are reference values.

Monitor item	Condition	Specification
HO2S2 (B1)	• Revving engine from idle to 3,000 rpm quickly after the following conditions are met. - Engine: After warming up - Keeping the engine speed between 3,500 and 4,000 rpm for 1 minute and at idle for 1 minute under no load	0 - 0.3 V ←→ Approx. 0.6 - 1.0 V
HO2S2 MNTR (B1)		LEAN ←→ RICH

On Board Diagnosis Logic

INFOID:0000000005285341

The heated oxygen sensor 2 has a much longer switching time between rich and lean than the air fuel ratio (A/F) sensor 1. The oxygen storage capacity before the three way catalyst (manifold) causes the longer switching time.

MALFUNCTION A

To judge the malfunctions of rear heated oxygen sensor 2, ECM monitors whether the voltage is unusually high during the various driving condition such as fuel-cut.

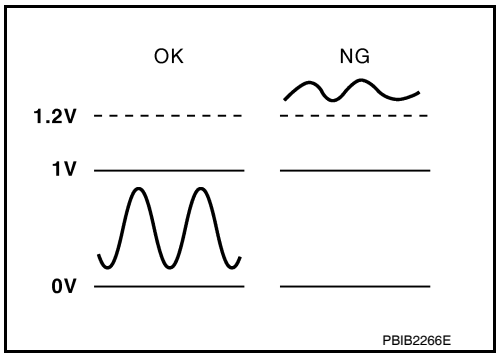

MALFUNCTION B

To judge the malfunctions of heated oxygen sensor 2, ECM monitors whether the minimum voltage of sensor is sufficiently low during the various driving condition such as fuel-cut.

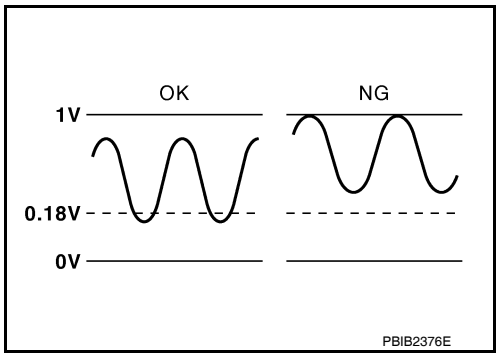

DTC No.	Trouble diagnosis name	DTC detecting condition		Possible cause
P0138 0138	Heated oxygen sensor 2 circuit high voltage	A)	An excessively high voltage from the sensor is sent to ECM.	• Harness or connectors (Heated oxygen sensor 2 circuit is open or shorted.) • Heated oxygen sensor 2
		B)	The minimum voltage from the sensor is not reached to the specified voltage.	• Harness or connectors (Heated oxygen sensor circuit is open or shorted.) • Heated oxygen sensor 2 • Fuel pressure • Fuel injector

DTC Confirmation Procedure

INFOID:0000000005285342

Perform PROCEDURE FOR MALFUNCTION A first.
If DTC cannot be confirmed, perform PROCEDURE FOR MALFUNCTION B.
NOTE:
If DTC Confirmation Procedure has been previously conducted, always turn ignition switch OFF and wait at least 10 seconds before conducting the next test.

PROCEDURE FOR MALFUNCTION A

WITH CONSULT-III

1. Turn ignition switch ON and select “DATA MONITOR” mode with CONSULT-III.
2. Start engine and warm it up to the normal operating temperature.
3. Turn ignition switch OFF and wait at least 10 seconds.
4. Start engine and keep the engine speed between 3,500 and 4,000 rpm for at least 1 minute under no load.
5. Let engine idle for 2 minutes.
6. Check 1st trip DTC.
7. If 1st trip DTC is detected, go to EC-815, "Diagnosis Procedure".

WITH GST

Follow the procedure “With CONSULT-III” above.

PROCEDURE FOR MALFUNCTION B

WITH CONSULT-III

TESTING CONDITION:
For the best results, perform DTC WORK SUPPORT at a temperature of 0 to 30°C (32 to 86°F).

1. Turn ignition switch ON and select “DATA MONITOR ” mode with CONSULT-III
2. Start engine and warm it up to the normal operating temperature.
3. Turn ignition switch OFF and wait at least 10 seconds.
4. Start engine and keep the engine speed between 3,500 and 4,000 rpm for at least 1 minute under no load.
5. Let engine idle for 1 minute.
6. Make sure that “COOLAN TEMP/S” indicates more than 70°C (158°F).
   If not, warm up engine and go to next step when “COOLAN TEMP/S” indication reaches to 70°C (158°F).
7. Open engine hood.
8. Select “HO2S2 (B1) P1146” (for DTC P0138) of “HO2S2” in “DTC WORK SUPPORT” mode with CONSULT-III.
9. Following the instruction of CONSULT-III.
   NOTE:
   It will take at most 10 minutes until “COMPLETED” is displayed.
10. Make sure that “OK” is displayed after touching “ON-BOARD DIAGNOSIS”.
    If “NG” is displayed, refer to EC-815, "Diagnosis Procedure".
    If “CAN NOT BE DIAGNOSED” is displayed, perform the following.

a. Turn ignition switch OFF and leave the vehicle in a cool place (soak the vehicle).
b. Return to step 1.

Overall Function Check

INFOID:0000000005285343

PROCEDURE FOR MALFUNCTION B

Use this procedure to check the overall function of the heated oxygen sensor 2 circuit. During this check, a 1st trip DTC might not be confirmed.

WITH GST

1. Start engine and warm it up to the normal operating temperature.
2. Turn ignition switch OFF and wait at least 10 seconds.
3. Start engine and keep the engine speed between 3,500 and 4,000 rpm for at least 1 minute under no load.
4. Let engine idle 1 minute.
5. Set voltmeter probes between ECM terminal 50 (HO2S2 signal) and ground.
6. Check the voltage when revving up to 4,000 rpm under no load at least 10 times.
   (Depress and release accelerator pedal as soon as possible.)
   The voltage should be below 0.18 V at least once during this procedure.
   If the voltage can be confirmed in step 6, step 7 is not necessary.
7. Keep vehicle at idling for 10 minutes, then check the voltage. Or check the voltage when coasting from 80 km/h (50 MPH) in D position (CVT) or 3rd gear position (M/T).
   The voltage should be below 0.18 V at least once during this procedure.
8. If NG, go to EC-815, "Diagnosis Procedure".

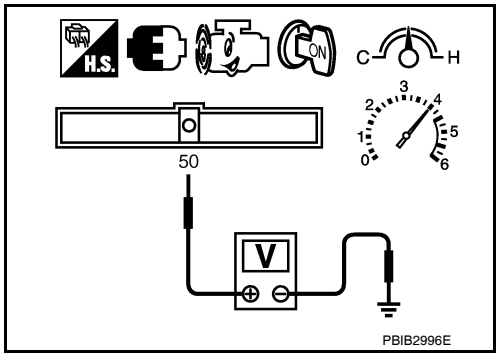

Wiring Diagram

INFOID:0000000005285344

EC-HO2S2-01

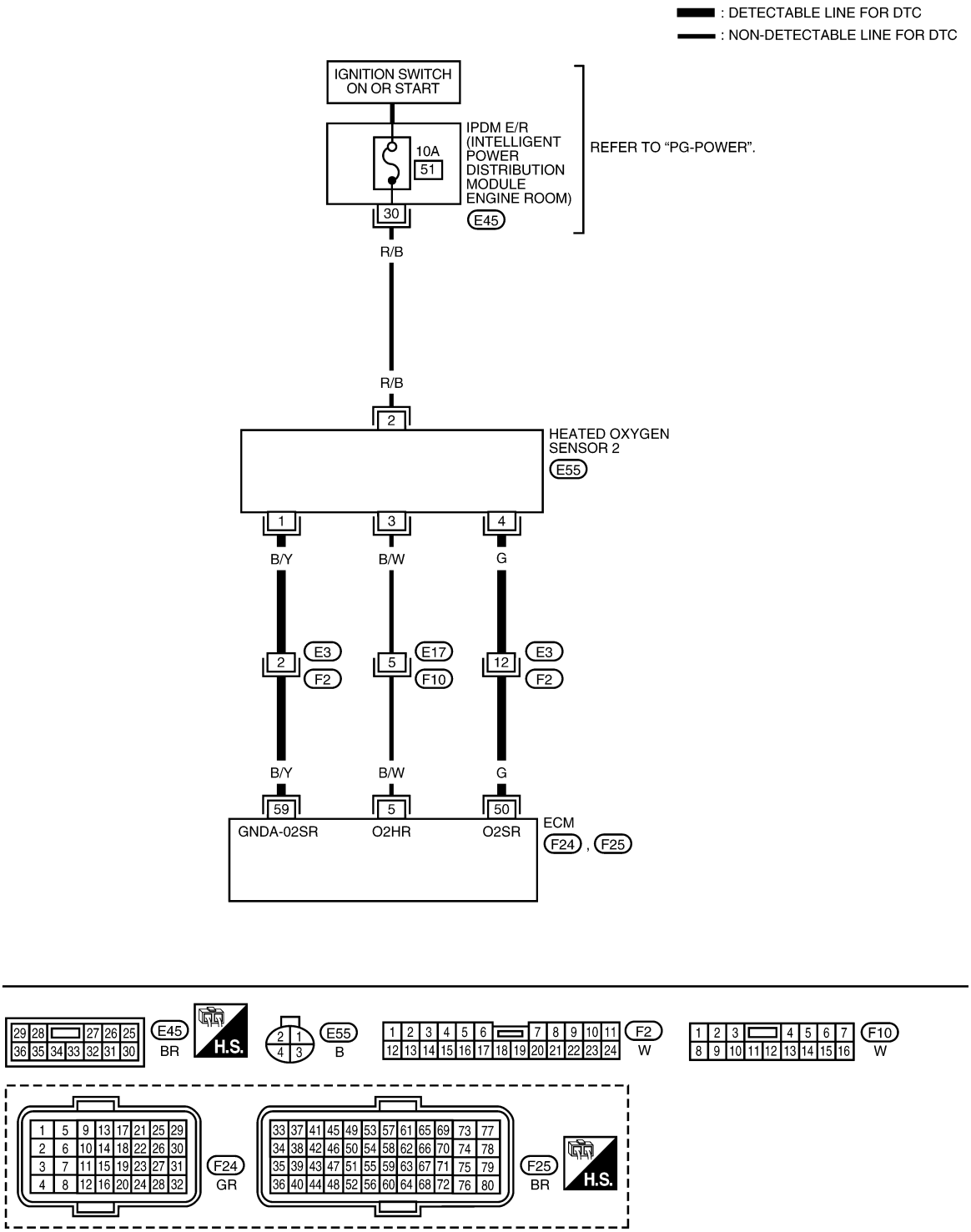

Specification data are reference values and are measured between each terminal and ground.
Pulse signal is measured by CONSULT-III.

CAUTION:

Do not use ECM ground terminals when measuring input/output voltage. Doing so may result in damage to the ECM's transistor. Use a ground other than ECM terminals, such as the ground.

TERMINAL NO.	WIRE COLOR	ITEM	CONDITION	DATA (DC Voltage)
5	B/W	Heated oxygen sensor 2 heater	**[Engine is running]** • Engine speed: Below 3,600 rpm after the following conditions are met. - Engine: After warming up - Keeping the engine speed between 3,500 and 4,000 rpm for 1 minute and at idle for 1 minute under no load.	Approximately 10 V★ 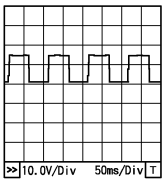 PBIA8148J
			[Ignition switch: ON] • Engine stopped **[Engine is running]** • Engine speed: Above 3,600 rpm.	BATTERY VOLTAGE (11 - 14 V)
50	G	Heated oxygen sensor 2	**[Engine is running]** • Revving engine from idle to 3,000 rpm quickly after the following conditions are met. - Engine: After warming up - Keeping the engine speed between 3,500 and 4,000 rpm for 1 minute and at idle for 1 minute under no load.	0 - Approximately 1.0 V
59	B/Y	Sensor ground (Heated oxygen sensor 2)	**[Engine is running]** • **Warm-up condition** • Idle speed	Approximately 0 V

★: Average voltage for pulse signal (Actual pulse signal can be confirmed by oscilloscope.)

Diagnosis Procedure

INFOID:0000000005285345

PROCEDURE FOR MALFUNCTION A

1. CHECK GROUND CONNECTIONS

1. Turn ignition switch OFF.
2. Loosen and retighten engine screws on the body.
   Refer to EC-711, "Ground Inspection".

- ⇦ : Vehicle front
- Body ground (1)

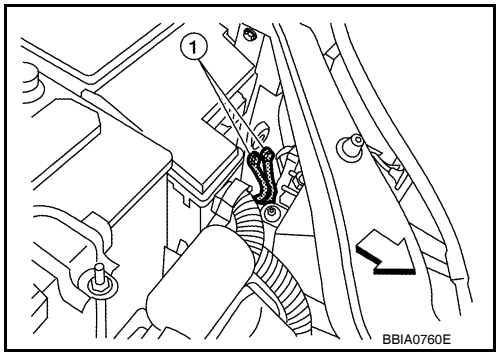

OK or NG

OK >> GO TO 2.
NG >> Repair or replace ground connections.

2. CHECK HO2S2 GROUND CIRCUIT FOR OPEN AND SHORT

1. Disconnect heated oxygen sensor 2 harness connector (2).
- ⇦ : Vehicle front
- Heated oxygen sensor 2 (1)
2. Disconnect ECM harness connector.
3. Check harness continuity between ECM terminal 59 and HO2S2 terminal 1. Refer to Wiring Diagram.

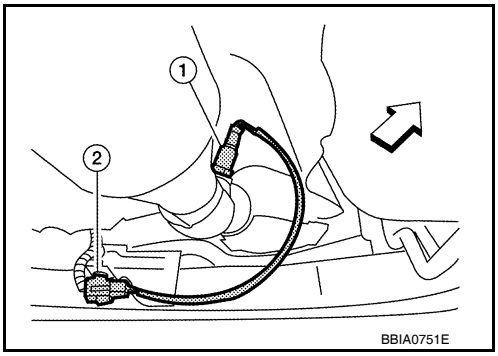

Continuity should exist.

4. Also check harness for short to ground and short to power.

OK or NG

OK >> GO TO 4.
NG >> GO TO 3.

3. DETECT MALFUNCTIONING PART

Check the following.
- Harness connectors E3, F2
- Harness for open circuit or short between heated oxygen sensor 2 and ECM.

>> Repair open circuit or short to ground or short to power in harness or connectors.

4. CHECK HO2S2 INPUT SIGNAL CIRCUIT FOR OPEN AND SHORT

1. Check harness continuity between ECM terminal 50 and HO2S2 terminal 4. Refer to Wiring Diagram.

Continuity should exist.

2. Check harness continuity between ECM terminal 50 or HO2S2 terminal 4 and ground. Refer to Wiring Diagram.

Continuity should not exist.

3. Also check harness for short to power.

OK or NG

OK >> GO TO 6.
NG >> GO TO 5.

5. DETECT MALFUNCTIONING PART

Check the following.
- Harness connectors E3, F2
- Harness for open circuit or short between heated oxygen sensor 2 and ECM.

>> Repair open circuit or short to ground or short to power in harness or connectors.

6. CHECK HO2S2 CONNECTOR FOR WATER

Check connectors for water.

Water should not exist.

OK or NG

OK >> GO TO 7.
NG >> Repair or replace harness or connectors.

7. CHECK HEATED OXYGEN SENSOR 2

Refer to EC-818, "Component Inspection".

OK or NG

OK >> GO TO 8.
NG >> Replace heated oxygen sensor 2.

8. CHECK INTERMITTENT INCIDENT

Refer to EC-706.

>> **INSPECTION END**

PROCEDURE FOR MALFUNCTION B

1. CHECK GROUND CONNECTIONS

1. Turn ignition switch OFF.
2. Loosen and retighten engine screws on the body.
   Refer to EC-711, "Ground Inspection".

- ⇦ : Vehicle front
- Body ground (1)

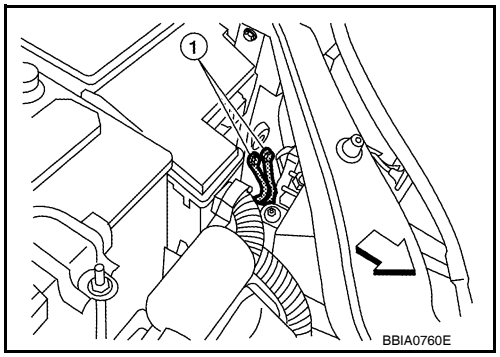

OK or NG

OK >> GO TO 2.
NG >> Repair or replace ground connections.

2. CLEAR THE SELF-LEARNING DATA

With CONSULT-III

1. Start engine and warm it up to normal operating temperature.
2. Select “SELF-LEARNING CONT” in “WORK SUPPORT” mode with CONSULT-III.
3. Clear the self-learning control coefficient by touching “CLEAR”.
4. Run engine for at least 10 minutes at idle speed.
   Is the 1st trip DTC P0172 detected?
   Is it difficult to start engine?

Without CONSULT-III

1. Start engine and warm it up to normal operating temperature.
2. Turn ignition switch OFF.
3. Disconnect mass air flow sensor (1) harness connector, and restart and run engine for at least 5 seconds at idle speed.
4. Stop engine and reconnect mass air flow sensor harness connector.
5. Make sure that DTC P0102 is displayed.
6. Erase the DTC memory. Refer to EC-617, "Emission-related Diagnostic Information".
7. Make sure that DTC P0000 is displayed.
8. Run engine for at least 10 minutes at idle speed.
   Is the 1st trip DTC P0172 detected?
   Is it difficult to start engine?

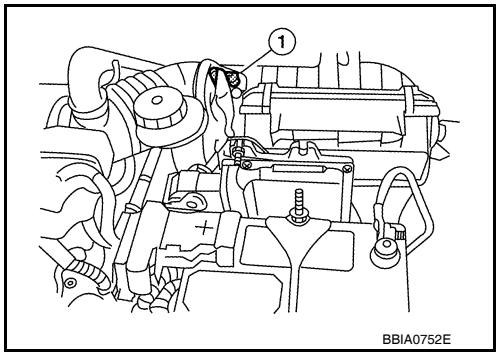

Yes or No

Yes >> Perform trouble diagnosis for DTC P0172. Refer to EC-834.
No >> GO TO 3.

3. CHECK HO2S2 GROUND CIRCUIT FOR OPEN AND SHORT

1. Turn ignition switch OFF.
2. Disconnect heated oxygen sensor 2 harness connector (2).

- ⇦ : Vehicle front
- Heated oxygen sensor 2 (1)

3. Disconnect ECM harness connector.
4. Check harness continuity between ECM terminal 59 and HO2S2 terminal 1. Refer to Wiring Diagram.

   Continuity should exist.

5. Also check harness for short to ground and short to power.

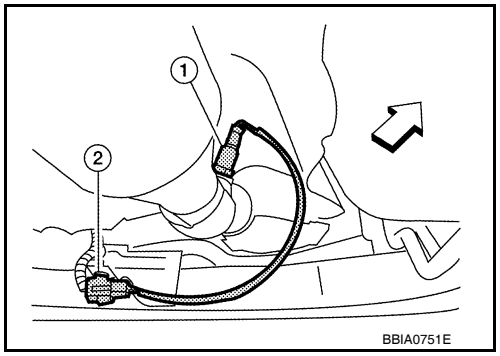

OK or NG

OK >> GO TO 5.
NG >> GO TO 4.

4. CHECK MALFUNCTIONING PART

Check the following.
- Harness connectors E3, F2
- Harness for open circuit or short between heated oxygen sensor 2 and ECM.

>> Repair open circuit or short to ground or short to power in harness or connectors.

5. CHECK HO2S2 INPUT SIGNAL CIRCUIT FOR OPEN AND SHORT

1. Check harness continuity between ECM terminal 50 and HO2S2 terminal 4.
   Refer to Wiring Diagram.

   Continuity should exist.

2. Check harness continuity between ECM terminal 50 or HO2S2 terminal 4 and ground.
   Refer to Wiring Diagram.

   Continuity should not exist.

3. Also check harness for short to power.

OK or NG

OK >> GO TO 7.
NG >> GO TO 6.

6. CHECK MALFUNCTIONING PART

Check the following.
- Harness connectors E3, F2
- Harness for open circuit or short between heated oxygen sensor 2 and ECM.

>> Repair open circuit or short to ground or short to power in harness or connectors.

7. CHECK HEATED OXYGEN SENSOR 2

Refer to EC-818, "Component Inspection".

OK or NG

OK >> GO TO 8.
NG >> Replace heated oxygen sensor 2.

8. CHECK INTERMITTENT INCIDENT

Refer to EC-706.

>> **INSPECTION END**

Component Inspection

INFOID:0000000005285346

HEATED OXYGEN SENSOR 2

WITH CONSULT-III

1. Start engine and warm it up to the normal operating temperature.
2. Turn ignition switch OFF and wait at least 10 seconds.
3. Start engine and keep the engine speed between 3,500 and 4,000 rpm for at least 1 minute under no load.
4. Let engine idle for 1 minute.
5. Select “FUEL INJECTION” in “ACTIVE TEST” mode, and select “HO2S2 (B1)” as the monitor item with CONSULT-III.

6. Check “HO2S2 (B1)” at idle speed when adjusting “FUEL INJECTION” to ±25%.

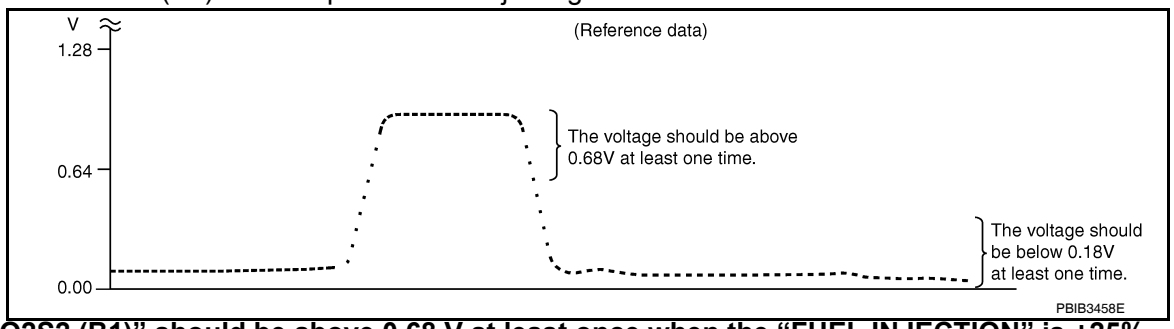

“HO2S2 (B1)” should be above 0.68 V at least once when the “FUEL INJECTION” is +25%.
“HO2S2 (B1)” should be below 0.18 V at least once when the “FUEL INJECTION” is –25%.

CAUTION:
- **Discard any heated oxygen sensor which has been dropped from a height of more than 0.5 m (19.7 in) onto a hard surface such as a concrete floor; use a new one.**
- **Before installing new oxygen sensor, clean exhaust system threads using Oxygen Sensor Thread Cleaner tool J-43897-18 or J-43897-12 and approved anti-seize lubricant.**

WITHOUT CONSULT-III

1. Start engine and warm it up to the normal operating temperature.
2. Turn ignition switch OFF and wait at least 10 seconds.
3. Start engine and keep the engine speed between 3,500 and 4,000 rpm for at least 1 minute under no load.
4. Let engine idle for 1 minute.
5. Set voltmeter probes between ECM terminal 50 (HO2S2 signal) and ground.
6. Check the voltage when revving up to 4,000 rpm under no load at least 10 times.
   (Depress and release accelerator pedal as soon as possible.)
   The voltage should be above 0.68 V and below 0.18 V at least once during this procedure.
   If the voltage can be confirmed at step 6, step 7 is not necessary.

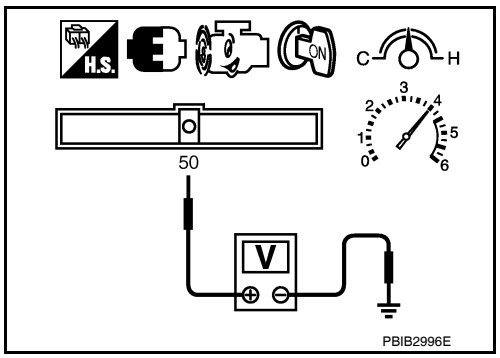

7. Keep vehicle idling for 10 minutes, then check voltage. Or check the voltage when coasting from 80 km/h (50 MPH) in D position (CVT) or 3rd gear position (M/T).
   The voltage should be above 0.68 V and below 0.18 V at least once during this procedure.
8. If NG, replace heated oxygen sensor 2.

CAUTION:
- **Discard any heated oxygen sensor which has been dropped from a height of more than 0.5 m (19.7 in) onto a hard surface such as a concrete floor; use a new one.**
- **Before installing new oxygen sensor, clean exhaust system threads using Oxygen Sensor Thread Cleaner tool J-43897-18 or J-43897-12 and approved anti-seize lubricant.**

Removal and Installation

INFOID:0000000005285347

HEATED OXYGEN SENSOR 2

Refer to EM-23.

DTC P0139 HO2S2

Component Description

INFOID:0000000005285348

The heated oxygen sensor 2, after three way catalyst (manifold), monitors the oxygen level in the exhaust gas.
Even if switching characteristics of the air fuel ratio (A/F) sensor 1 are shifted, the air/fuel ratio is controlled to stoichiometric, by the signal from the heated oxygen sensor 2.
This sensor is made of ceramic zirconia. The zirconia generates voltage from approximately 1 V in richer conditions to 0 V in leaner conditions.
Under normal conditions the heated oxygen sensor 2 is not used for engine control operation.

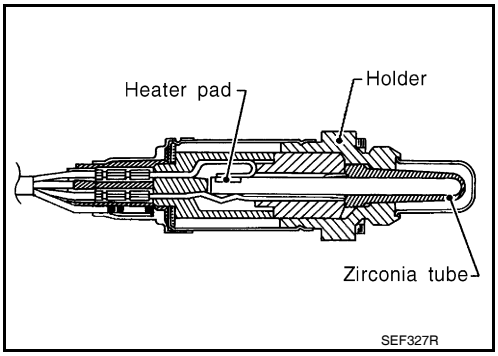

CONSULT-III Reference Value in Data Monitor Mode

INFOID:0000000005285349

Specification data are reference values.

Monitor item	Condition	Specification
HO2S2 (B1)	• Revving engine from idle to 3,000 rpm quickly after the following conditions are met. - Engine: After warming up - Keep the engine speed between 3,500 rpm and 4,000 rpm for 1 minute and idle for 1 minute under no load	0 - 0.3 V ←→ Approx. 0.6 - 1.0 V
HO2S2 MNTR (B1)		LEAN ←→ RICH
HO2 S2 DIAG1 (B1)	DTC P0139 self-diagnosis (delayed response) is incomplete.	INCMP
	DTC P0139 self-diagnosis (delayed response) is complete.	CMPLT
HO2 S2 DIAG2 (B1)	DTC P0139 self-diagnosis (slow response) is incomplete.	INCMP
	DTC P0139 self-diagnosis (slow response) is complete.	CMPLT

On Board Diagnosis Logic

INFOID:0000000005285350

The heated oxygen sensor 2 has a much longer switching time between rich and lean than the air fuel ratio (A/F) sensor 1. The oxygen storage capacity of the three way catalyst 1 causes the longer switching time. To judge the malfunctions of heated oxygen sensor 2, ECM monitors whether the switching response of the sensor's voltage is faster than specified during various driving conditions such as fuel cut.

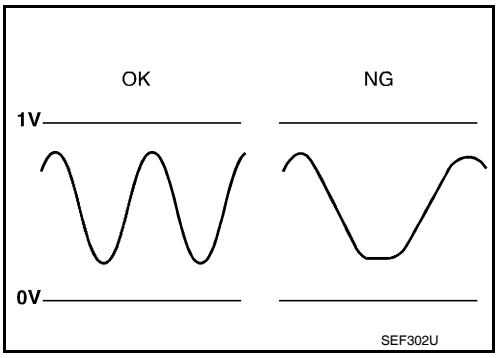

DTC No.	Trouble diagnosis name	DTC detecting condition	Possible cause
P0139 0139	Heated oxygen sensor 2 (bank 1) circuit slow response	The switching time between rich and lean of a heated oxygen sensor 2 signal delays more than the specified time computed by ECM.	• Harness or connectors (The sensor circuit is open or shorted) • Heated oxygen sensor 2 • Fuel system • EVAP system • Intake air system

DTC Confirmation Procedure

INFOID:0000000005285351

1. INSPECTION START

Do you have CONSULT-III?

Do you have CONSULT-III?

YES >> GO TO 2.
NO >> GO TO 7.

2. PRECONDITIONING

If DTC Confirmation Procedure has been previously conducted, always perform the following procedure before conducting the next test.

1. Turn ignition switch OFF and wait at least 10 seconds.
2. Turn ignition switch ON.
3. Turn ignition switch OFF and wait at least 10 seconds.

TESTING CONDITION:
For better results, perform "DTC WORK SUPPORT" at a temperature of 0 to 30°C (32 to 86°F).

>> GO TO 3.

3. PERFORM DTC CONFIRMATION PROCEDURE

With CONSULT-III

1. Turn ignition switch ON and select "DATA MONITOR" mode with CONSULT-III.
2. Start engine and warm it up to the normal operating temperature.
3. Turn ignition switch OFF and wait at least 10 seconds.
4. Turn ignition switch ON.
5. Turn ignition switch OFF and wait at least 10 seconds.
6. Start engine and keep the engine speed between 3,500 and 4,000 rpm for at least 1 minute under no load.
7. Let engine idle for 1 minute.
8. Make sure that "COOLAN TEMP/S" indicates more than 70°C (158°F).
9. Drive the vehicle in a proper at 60 km/h (38MPH) and maintain the speed.
   CAUTION:
   Always drive vehicle at a safe speed.
10. Release the accelerator pedal fully at least 5 seconds.
    CAUTION:
    - **Enable engine brake.**
    - **Always drive carefully.**
    - **Never apply brake when releasing the accelerator pedal.**
11. Repeat step 9 and 10 at least 8 times.
12. Check the following item of "DATA MONITOR".

Data monitor item	Status
HO2 S2 DIAG1 (B1)	CMPLT
HO2 S2 DIAG2 (B1)	

Is "CMPLT" displayed on CONSULT-III screen?

YES >> GO TO 6.
NO-1: "CMPLT" is not displayed on DIAG 1>>Perform DTC confirmation procedure again.
NO-2: "CMPLT" is not displayed on DIAG 2>>GO TO 4.

4. PERFORM DTC WORK SUPPORT

1. Open engine hood.
2. Select "HO2S2 (B1) P0139" in "DTC WORK SUPPORT" mode with CONSULT-III.
3. Start engine and follow the instruction of CONSULT-III display.
   NOTE:
   It will take at most 10 minutes until "COMPLETED" is displayed.

Is "COMPLETED" displayed on CONSULT-III screen?

YES >> GO TO 6.
NO >> GO TO 5.

5. PERFORM DTC CONFIRMATION PROCEDURE AGAIN

1. Turn ignition switch OFF and leave the vehicle in a cool place (soak the vehicle).
2. Perform DTC confirmation procedure again.

>> GO TO 3.

6. PERFORM SELF-DIAGNOSIS

With CONSULT-III

Perform ECM self-diagnosis.

Is DTC "P0139" detected?

YES >> Proceed to EC-824, "Diagnosis Procedure".
NO >> INSPECTION END

7. PERFORM OVERALL FUNCTION CHECK

Perform component function check. Refer to EC-822, "Overall Function Check".

NOTE:

Use overall function check to check the overall function of the heated oxygen sensor 2 circuit. During this check, a 1st trip DTC might not be confirmed.

Is the inspection result normal?

YES >> INSPECTION END
NO >> Proceed to EC-824, "Diagnosis Procedure".

Overall Function Check

INFOID:0000000005285352

Use this procedure to check the overall function of the heated oxygen sensor 2 circuit. During this check, a 1st trip DTC might not be confirmed.

WITH GST

1. Start engine and warm it up to the normal operating temperature.
2. Turn ignition switch OFF and wait at least 10 seconds.
3. Start engine and keep the engine between 3,500 and 4,000 rpm for at least 1 minute under no load.
4. Let engine idle for 1 minute.
5. Set voltmeter probes between ECM terminal 50 (HO2S2 signal) and ground.
6. Check the voltage when revving up to 4,000 rpm under no load at least 10 times.
   (Depress and release accelerator pedal as soon as possible.)
   A change of voltage should be more than 0.8 V for 1 second during this procedure.
   If the voltage can be confirmed in step 6, step 7 is not necessary.
7. Keep vehicle at idling for 10 minutes, then check the voltage. Or check the voltage when coasting from 80 km/h (50 MPH) in D position (CVT) or 3rd gear position (M/T).
   A change of voltage should be more than 0.8 V for 1 second during this procedure.
8. If NG, go to EC-824, "Diagnosis Procedure".

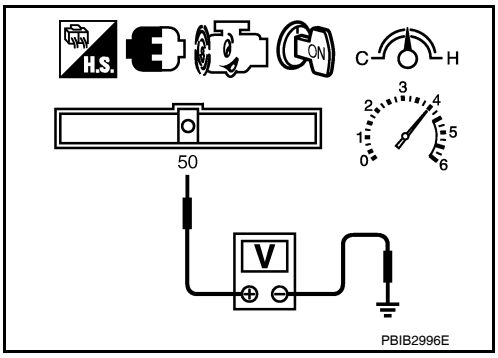

Wiring Diagram

INFOID:0000000005285353

EC-HO2S2-01

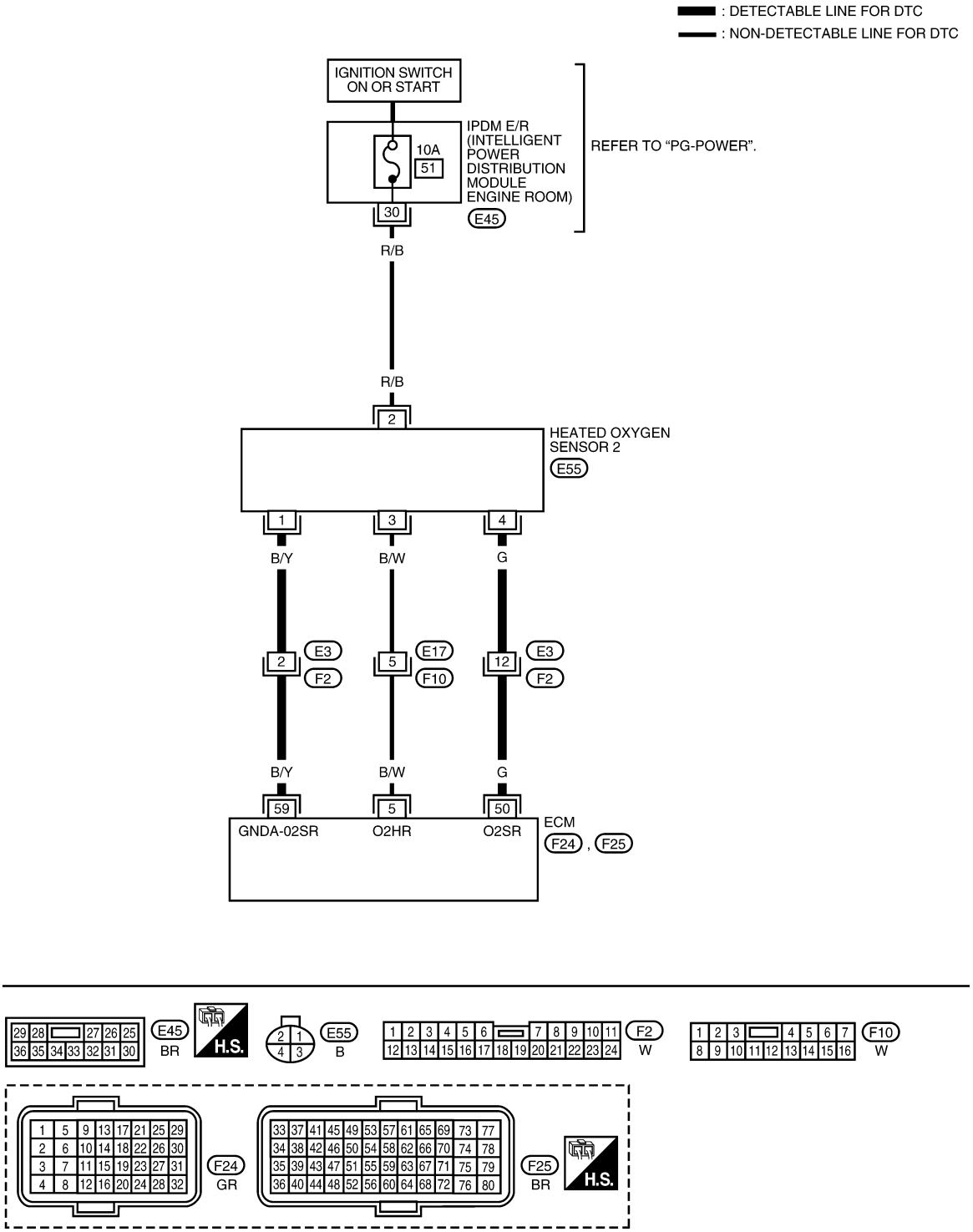

Specification data are reference values and are measured between each terminal and ground.
Pulse signal is measured by CONSULT-III.

CAUTION:

Do not use ECM ground terminals when measuring input/output voltage. Doing so may result in damage to the ECM's transistor. Use a ground other than ECM terminals, such as the ground.

TERMINAL NO.	WIRE COLOR	ITEM	CONDITION	DATA (DC Voltage)
5	B/W	Heated oxygen sensor 2 heater	**[Engine is running]** • Below 3,600 rpm after the following conditions are met. - Engine: After warming up - Keeping the engine speed between 3,500 and 4,000 rpm for 1 minute and at idle for 1 minute under no load	Approximately 10 V★ 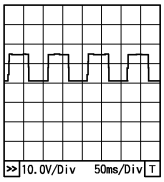 PBIA8148J
			[Ignition switch: ON] • Engine stopped **[Engine is running]** • Engine speed: Above 3,600 rpm	BATTERY VOLTAGE (11 - 14 V)
50	G	Heated oxygen sensor 2	**[Engine is running]** • Revving engine from idle to 3,000 rpm quickly after the following conditions are met. - Engine: After warming up - Keeping the engine speed between 3,500 and 4,000 rpm for 1 minute and at idle for 1 minute under no load.	0 - Approximately 1.0 V
59	B/Y	Sensor ground (Heated oxygen sensor 2)	**[Engine is running]** • **Warm-up condition** • Idle speed	Approximately 0 V

★: Average voltage for pulse signal (Actual pulse signal can be confirmed by oscilloscope.)

Diagnosis Procedure

INFOID:0000000005285354

1. CHECK GROUND CONNECTIONS

1. Turn ignition switch OFF.
2. Loosen and retighten ground screws on the body.
   Refer to EC-711, "Ground Inspection".

- ⇦: Vehicle front
- Body ground (1)

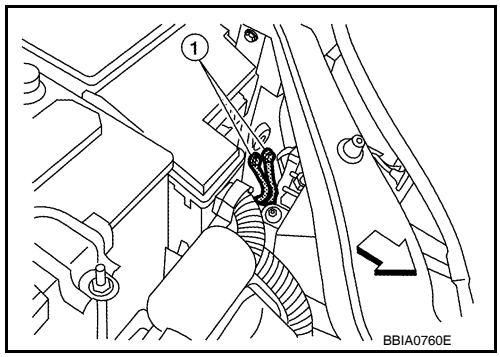

OK or NG

OK >> GO TO 2.
NG >> Repair or replace ground connections.

2. CLEAR THE SELF-LEARNING DATA

With CONSULT-III

1. Start engine and warm it up to normal operating temperature.
2. Select “SELF-LEARNING CONT” in “WORK SUPPORT” mode with CONSULT-III.
3. Clear the self-learning control coefficient by touching “CLEAR”.
4. Run engine for at least 10 minutes at idle speed.
   Is the 1st trip DTC P0171 or P0172 detected?
   Is it difficult to start engine?

Without CONSULT-III

1. Start engine and warm it up to normal operating temperature.
2. Turn ignition switch OFF.

3. Disconnect mass air flow sensor (1) harness connector, and restart and run engine for at least 5 seconds at idle speed.
4. Stop engine and reconnect mass air flow sensor harness connector.
5. Make sure that DTC P0102 is displayed.
6. Erase the DTC memory. Refer to EC-617, "Emission-related Diagnostic Information".
7. Make sure that DTC P0000 is displayed.
8. Run engine for at least 10 minutes at idle speed.
Is the 1st trip DTC P0171 or P0172 detected?
Is it difficult to start engine?

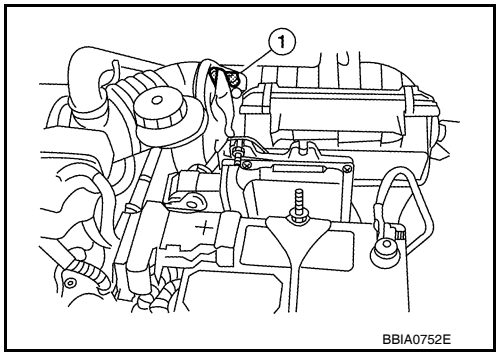

Yes or No

Yes >> Perform trouble diagnosis for DTC P0171 or P0172. Refer to EC-828 or EC-834.
No >> GO TO 3.

3. CHECK HO2S2 GROUND CIRCUIT FOR OPEN AND SHORT

1. Turn ignition switch OFF.
2. Disconnect heated oxygen sensor 2 harness connector (2).
- ⇦: Vehicle front
- Heated oxygen sensor 2 (1)
3. Disconnect ECM harness connector.
4. Check harness continuity between HO2S2 terminal 1 and ECM terminal 59. Refer to Wiring Diagram.

Continuity should exist.

5. Also check harness for short to ground and short to power.

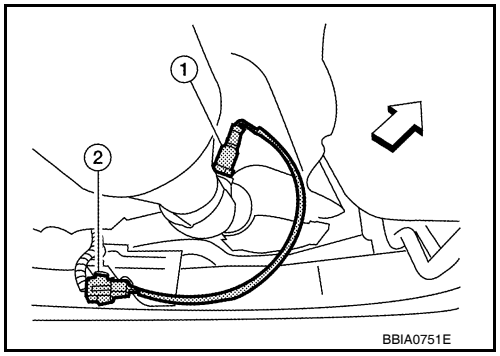

OK or NG

OK >> GO TO 5.
NG >> GO TO 4.

4. DETECT MALFUNCTIONING PART

Check the following.
- Harness connectors E3, F2
- Harness for open circuit or short between heated oxygen sensor 2 and ECM.

>> Repair open circuit or short to ground or short to power in harness or connectors.

5. CHECK HO2S2 INPUT SIGNAL CIRCUIT FOR OPEN AND SHORT

1. Check harness continuity between HO2S2 terminal 4 and ECM terminal 50. Refer to Wiring Diagram.

Continuity should exist.

2. Check harness continuity between ECM terminal 50 or HO2S2 terminal 4 and ground. Refer to Wiring Diagram.

Continuity should not exist.

3. Also check harness for short to power.

OK or NG

OK >> GO TO 7.
NG >> GO TO 6.

6. DETECT MALFUNCTIONING PART

Check the following.
- Harness connectors E3, F2
- Harness for open circuit or short between heated oxygen sensor 2 and ECM.

>> Repair open circuit or short to ground or short to power in harness or connectors.

7. CHECK HEATED OXYGEN SENSOR 2

Refer to EC-826, "Component Inspection".

OK or NG

OK >> GO TO 8.
NG >> Replace heated oxygen sensor 2.

8. CHECK INTERMITTENT INCIDENT

Refer to EC-706.

>> **INSPECTION END**

Component Inspection

INFOID:0000000005285355

HEATED OXYGEN SENSOR 2

WITH CONSULT-III

1. Start engine and warm it up to the normal operating temperature.
2. Turn ignition switch OFF and wait at least 10 seconds.
3. Start engine and keep the engine speed between 3,500 and 4,000 rpm for at least 1 minute under no load.
4. Let engine idle for 1 minute.
5. Select “FUEL INJECTION” in “ACTIVE TEST” mode, and select “HO2S2 (B1)” as the monitor item with CONSULT-III.
6. Check “HO2S2 (B1)” at idle speed when adjusting “FUEL INJECTION” to ±25%.

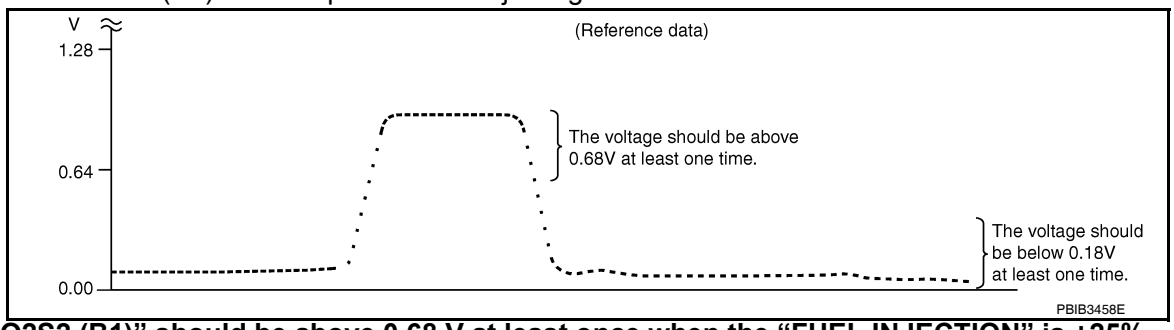

“HO2S2 (B1)” should be above 0.68 V at least once when the “FUEL INJECTION” is +25%.
“HO2S2 (B1)” should be below 0.18 V at least once when the “FUEL INJECTION” is –25%.

CAUTION:

- **Discard any heated oxygen sensor which has been dropped from a height of more than 0.5 m (19.7 in) onto a hard surface such as a concrete floor; use a new one.**
- **Before installing new oxygen sensor, clean exhaust system threads using Oxygen Sensor Thread Cleaner tool J-43897-18 or J-43897-12 and approved anti-seize lubricant.**

WITHOUT CONSULT-III

1. Start engine and warm it up to the normal operating temperature.
2. Turn ignition switch OFF and wait at least 10 seconds.
3. Start engine and keep the engine speed between 3,500 and 4,000 rpm for at least 1 minute under no load.
4. Let engine idle for 1 minute.
5. Set voltmeter probes between ECM terminal 50 (HO2S2 signal) and ground.

6. Check the voltage when revving up to 4,000 rpm under no load at least 10 times.
(Depress and release accelerator pedal as soon as possible.)
The voltage should be above 0.68 V and below 0.18 V at least once during this procedure.
If the voltage can be confirmed at step 6, step 7 is not necessary.

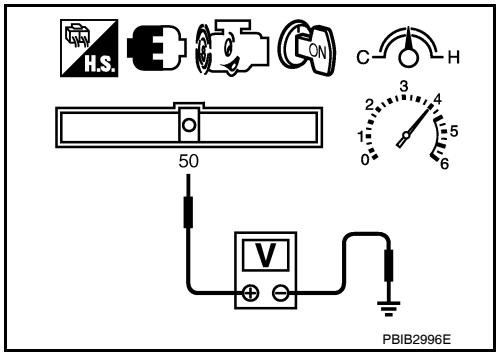

7. Keep vehicle idling for 10 minutes, then check voltage. Or check the voltage when coasting from 80 km/h (50 MPH) in D position (CVT) or 3rd gear position (M/T).
The voltage should be above 0.68 V and below 0.18 V at least once during this procedure.
8. If NG, replace heated oxygen sensor 2.
CAUTION:
- **Discard any heated oxygen sensor which has been dropped from a height of more than 0.5 m (19.7 in) onto a hard surface such as a concrete floor; use a new one.**
- **Before installing new oxygen sensor, clean exhaust system threads using Oxygen Sensor Thread Cleaner tool J-43897-18 or J-43897-12 and approved anti-seize lubricant.**

Removal and Installation

INFOID:0000000005285356

HEATED OXYGEN SENSOR 2

Refer to EM-23

DTC P0171 FUEL INJECTION SYSTEM FUNCTION

On Board Diagnosis Logic

INFOID:0000000005285357

With the Air/Fuel Mixture Ratio Self-Learning Control, the actual mixture ratio can be brought closely to the theoretical mixture ratio based on the mixture ratio feedback signal from the air fuel ratio (A/F) sensor 1. The ECM calculates the necessary compensation to correct the offset between the actual and the theoretical ratios. In case the amount of the compensation value is extremely large (The actual mixture ratio is too lean.), the ECM judges the condition as the fuel injection system malfunction and lights up the MIL (2 trip detection logic).

Sensor	Input Signal to ECM	ECM function	Actuator
Air fuel ratio (A/F) sensor 1	Density of oxygen in exhaust gas (Mixture ratio feedback signal)	Fuel injection control	Fuel injector

DTC No.	Trouble diagnosis name	DTC detecting condition	Possible cause
P0171 0171	Fuel injection system too lean	• Fuel injection system does not operate properly. • The amount of mixture ratio compensation is too large. (The mixture ratio is too lean.)	• Intake air leaks • Air fuel ratio (A/F) sensor 1 • Fuel injector • Exhaust gas leaks • Incorrect fuel pressure • Lack of fuel • Mass air flow sensor • Incorrect PCV hose connection

DTC Confirmation Procedure

INFOID:0000000005285358

NOTE:
If DTC Confirmation Procedure has been previously conducted, always turn ignition switch OFF and wait at least 10 seconds before conducting the next test.

WITH CONSULT-III

1. Start engine and warm it up to normal operating temperature.
2. Turn ignition switch OFF and wait at least 10 seconds.
3. Turn ignition switch ON and select “SELF-LEARNING CONT” in “WORK SUPPORT” mode with CONSULT-III.
4. Clear the self-learning control coefficient by touching “CLEAR”.
5. Start engine.
   If it is difficult to start engine, the fuel injection system has a malfunction.
   Perform the following procedure is advised.

a. Crank engine while depressing accelerator pedal.
   NOTE:
   When depressing accelerator pedal three-fourths (3/4) or more, the control system does not start the engine. Do not depress accelerator pedal too much.

b. If engine starts, go to EC-831, "Diagnosis Procedure".
   If engine does not start, check exhaust and intake air leak visually.

6. Keep engine at idle for at least 5 minutes.
7. Check 1st trip DTC.
   The 1st trip DTC P0171 should be detected at this stage, if a malfunction exists. If so, go to EC-831, "Diagnosis Procedure".
   NOTE:
   If 1st trip DTC is not detected during above procedure, performing the following procedure is advised.

a. Turn ignition switch OFF and wait at least 10 seconds.
b. Start engine.
c. Maintain the following conditions for at least 10 consecutive minutes.
   Hold the accelerator pedal as steady as possible.

VHCL SPEED SE	50 – 120 km/h (31 – 75 MPH)

CAUTION:
Always drive vehicle at a safe speed.

d. Check 1st trip DTC.
e. If 1st trip DTC is detected, go to EC-831, "Diagnosis Procedure".

WITH GST

1. Start engine and warm it up to normal operating temperature.
2. Turn ignition switch OFF and wait at least 10 seconds.
3. Disconnect mass air flow sensor (1) harness connector.
4. Restart engine and let idle for at least 5 seconds.
5. Stop engine and reconnect mass air flow sensor harness connector.
6. Select Service $03 with GST. Make sure DTC P0102 is detected.
7. Select Service $04 with GST and erase the DTC P0102.
8. Start engine.
   If it is difficult to start engine, the fuel injection system has a malfunction.
   Perform the following procedure is advised.

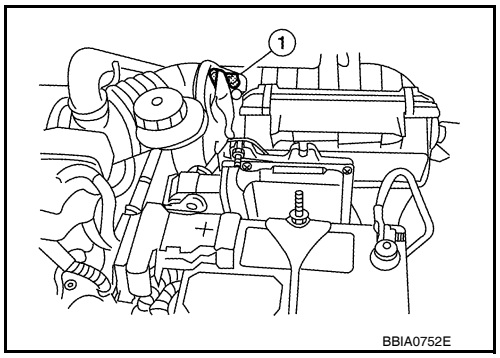

a. Crank engine while depressing accelerator pedal.
   NOTE:
   When depressing accelerator pedal three-fourths (3/4) or more, the control system does not start the engine. Do not depress accelerator pedal too much.
b. If engine starts, go to EC-831, "Diagnosis Procedure".
   If engine does not start, check exhaust and intake air leak visually.

9. Keep engine at idle for at least 5 minutes.
10. Check 1st trip DTC.
    The 1st trip DTC P0171 should be detected at this stage, if a malfunction exists. If so, go to EC-831, "Diagnosis Procedure".
    NOTE:
    If 1st trip DTC is not detected during above procedure, performing the following procedure is advised.

a. Turn ignition switch OFF and wait at least 10 seconds.
b. Start engine.
c. Maintain the following conditions for at least 10 consecutive minutes.
   Hold the accelerator pedal as steady as possible.

VHCL SPEED SE	50 – 120 km/h (31 – 75 MPH)

CAUTION:
Always drive vehicle at a safe speed.

d. Check 1st trip DTC.
e. If 1st trip DTC is detected, go to EC-831, "Diagnosis Procedure".

Wiring Diagram

INFOID:0000000005285359

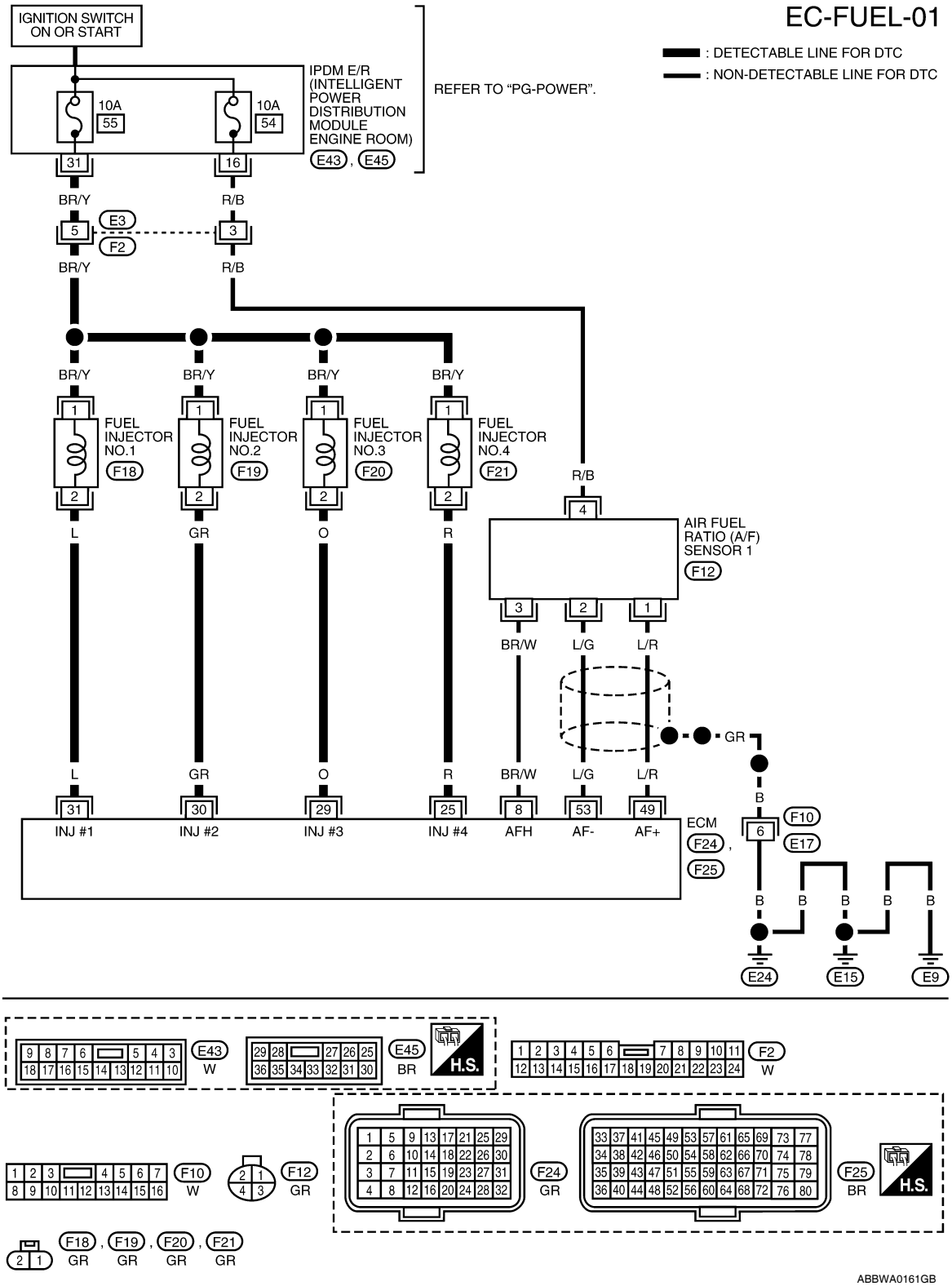

Specification data are reference values and are measured between each terminal and ground.
Pulse signal is measured by CONSULT-III.

CAUTION:

Do not use ECM ground terminals when measuring input/output voltage. Doing so may result in damage to the ECM's transistor. Use a ground other than ECM terminals, such as the ground.

TERMINAL NO.	WIRE COLOR	ITEM	CONDITION	DATA (DC Voltage)
8	BR/W	A/F sensor 1 heater	**[Engine is running]** • **Warm-up condition** • Idle speed (More than 140 seconds after starting engine)	Approximately 2.9 - 8.8 V★ 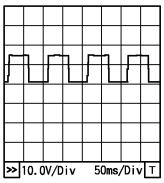 PBIA8148J
25 29 30 31	R O GR L	Fuel injector No. 4 Fuel injector No. 3 Fuel injector No. 2 Fuel injector No. 1	**[Engine is running]** • **Warm-up condition** • Idle speed **NOTE:** The pulse cycle changes depending on rpm at idle	BATTERY VOLTAGE (11 - 14 V)★ 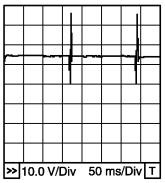 PBIB0529E
			[Engine is running] • **Warm-up condition** • Engine speed: 2,000 rpm	BATTERY VOLTAGE (11 - 14 V)★ 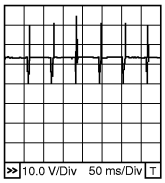 PBIA4943J
49	L/R	A/F sensor 1	**[Engine is running]** • **Warm-up condition** • Engine speed: 2,000 rpm	Approximately 1.8 V Output voltage varies with air fuel ratio.
53	L/G	A/F sensor 1	**[Ignition switch: ON]**	Approximately 2.2 V

★: Average voltage for pulse signal (Actual pulse signal can be confirmed by oscilloscope.)

Diagnosis Procedure

INFOID:0000000005285360

1. CHECK EXHAUST GAS LEAK

1. Start engine and run it at idle.
2. Listen for an exhaust gas leak before three way catalyst (manifold).

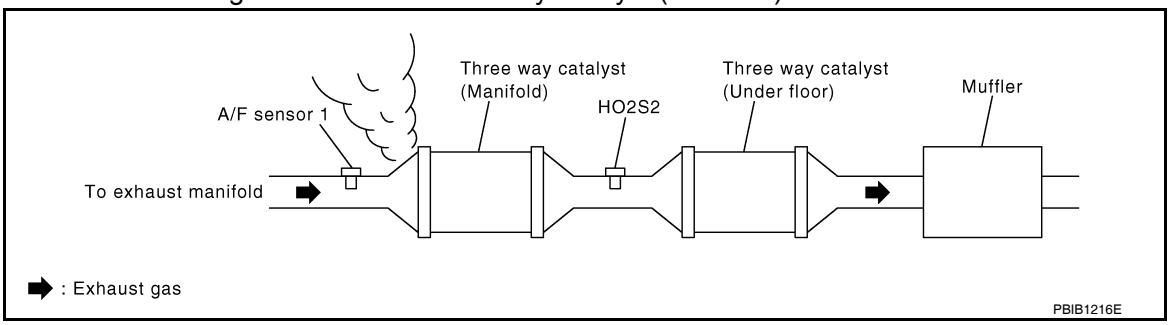

OK or NG

OK >> GO TO 2.
NG >> Repair or replace.

2. CHECK FOR INTAKE AIR LEAK AND PCV HOSE

1. Listen for an intake air leak after the mass air flow sensor.
2. Check PCV hose connection.

OK or NG

OK >> GO TO 3.
NG >> Repair or replace.

3. CHECK AIR FUEL RATIO (A/F) SENSOR 1 CIRCUIT FOR OPEN AND SHORT

1. Turn ignition switch OFF.
2. Disconnect air fuel ratio (A/F) sensor 1 harness connector (1).
- Air fuel ratio (A/F) sensor 1 (2)
3. Disconnect ECM harness connector.
4. Check harness continuity between the following terminals. Refer to Wiring Diagram.

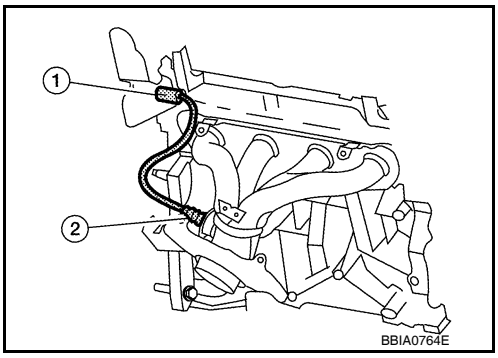

A/F sensor 1 terminal	ECM terminal
1	49
2	53

Continuity should exist.

5. Check harness continuity between ECM terminals 49, 53 or A/F sensor 1 terminals 1, 2 and ground. Refer to Wiring Diagram.

Continuity should not exist.

6. Also check harness for short to power.

OK or NG

OK >> GO TO 4.
NG >> Repair open circuit or short to ground or short to power in harness or connectors.

4. CHECK FUEL PRESSURE

1. Release fuel pressure to zero. Refer to EC-656, "Fuel Pressure Check".
2. Install fuel pressure gauge and check fuel pressure. Refer to EC-656, "Fuel Pressure Check".

At idling: Approximately 350 kPa (3.57 kg/cm^2, 51 psi)

OK or NG

OK >> GO TO 6.
NG >> GO TO 5.

5. DETECT MALFUNCTIONING PART

Check the following.
- Fuel pump and circuit (Refer to EC-1094.)
- Fuel pressure regulator (Refer to EC-656, "Fuel Pressure Check".)
- Fuel lines (Refer to EM-36.)
- Fuel filter for clogging

>> Repair or replace.

6. CHECK MASS AIR FLOW SENSOR

With CONSULT-III

1. Install all removed parts.
2. Start engine and warm it up to normal operating temperature.
3. Check “MASS AIR FLOW” in “DATA MONITOR” mode with CONSULT-III.

At idling : 1.0 - 4.0 g·m/sec
At 2,500 rpm : 2.0 - 10.0 g·m/sec

With GST

1. Install all removed parts.
2. Start engine and warm it up to normal operating temperature.
3. Check mass air flow sensor signal in Service $01 with GST.

At idling : 1.0 - 4.0 g·m/sec
At 2,500 rpm : 2.0 - 10.0 g·m/sec

OK or NG

OK >> GO TO 7.
NG >> Check connectors for rusted terminals or loose connections in the mass air flow sensor circuit or ground. Refer to EC-739.

7. CHECK FUNCTION OF FUEL INJECTORS

With CONSULT-III
1. Let engine idle.
2. Perform “POWER BALANCE” in “ACTIVE TEST” mode with CONSULT-III.
3. Make sure that each circuit produces a momentary engine speed drop.

Without CONSULT-III
1. Let engine idle.
2. Listen to each fuel injector operating sound.

Clicking noise should be heard.

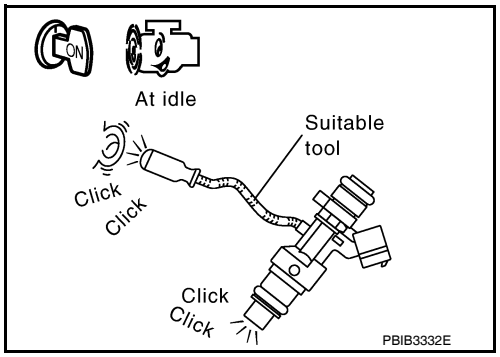

OK or NG

OK >> GO TO 8.
NG >> Perform trouble diagnosis for EC-1089.

8. CHECK FUEL INJECTOR

1. Confirm that the engine is cooled down and there are no fire hazards near the vehicle.
2. Turn ignition switch OFF.
3. Reconnect all harness connectors disconnected.
4. Remove fuel tube assembly. Refer to EM-36.
   Keep fuel hose and all fuel injectors connected to fuel tube.
   The fuel injector harness connectors should remain connected.
5. Disconnect all ignition coil harness connectors.
6. Prepare pans or saucers under each fuel injector.
7. Crank engine for about 3 seconds. Make sure that fuel sprays out from fuel injectors.

Fuel should be sprayed evenly for each fuel injector.

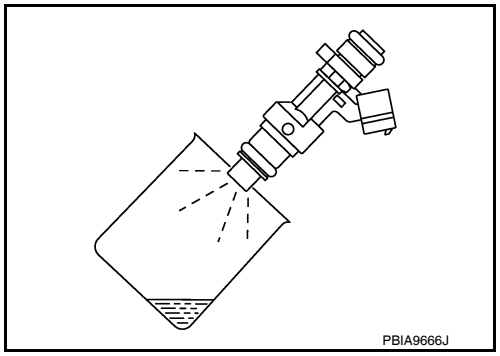

OK or NG

OK >> GO TO 9.
NG >> Replace fuel injectors from which fuel does not spray out. Always replace O-ring with new ones.

9. CHECK INTERMITTENT INCIDENT

Refer to EC-706.

>> **INSPECTION END**

DTC P0172 FUEL INJECTION SYSTEM FUNCTION

On Board Diagnosis Logic

INFOID:0000000005285361

With the Air/Fuel Mixture Ratio Self-Learning Control, the actual mixture ratio can be brought closely to the theoretical mixture ratio based on the mixture ratio feedback signal from the air fuel ratio (A/F) sensor 1. The ECM calculates the necessary compensation to correct the offset between the actual and the theoretical ratios. In case the amount of the compensation value is extremely large (The actual mixture ratio is too rich.), the ECM judges the condition as the fuel injection system malfunction and lights up the MIL (2 trip detection logic).

Sensor	Input Signal to ECM	ECM function	Actuator
Air fuel ratio (A/F) sensor 1	Density of oxygen in exhaust gas (Mixture ratio feedback signal)	Fuel injection control	Fuel injector

DTC No.	Trouble diagnosis name	DTC detecting condition	Possible cause
P0172 0172	Fuel injection system too rich	• Fuel injection system does not operate properly. • The amount of mixture ratio compensation is too large. (The mixture ratio is too rich.)	• Air fuel ratio (A/F) sensor 1 • Fuel injector • Exhaust gas leaks • Incorrect fuel pressure • Mass air flow sensor

DTC Confirmation Procedure

INFOID:0000000005285362

NOTE:
If DTC Confirmation Procedure has been previously conducted, always turn ignition switch OFF and wait at least 10 seconds before conducting the next test.

WITH CONSULT-III

1. Start engine and warm it up to normal operating temperature.
2. Turn ignition switch OFF and wait at least 10 seconds.
3. Turn ignition switch ON and select “SELF-LEARNING CONT” in “WORK SUPPORT” mode with CONSULT-III.
4. Clear the self-learning control coefficient by touching “CLEAR”.
5. Start engine.
   If it is difficult to start engine, the fuel injection system has a malfunction.
   Perform the following procedure is advised.

a. Crank engine while depressing accelerator pedal.
   NOTE:
   When depressing accelerator pedal three-fourths (3/4) or more, the control system does not start the engine. Do not depress accelerator pedal too much.

b. If engine starts, go to EC-837, "Diagnosis Procedure".
   If engine does not start, remove ignition plugs and check for fouling, etc.

6. Keep engine at idle for at least 5 minutes.
7. Check 1st trip DTC.
   The 1st trip DTC P0172 should be detected at this stage, if a malfunction exists. If so, go to EC-837, "Diagnosis Procedure".
   NOTE:
   If 1st trip DTC is not detected during above procedure, performing the following procedure is advised.

a. Turn ignition switch OFF and wait at least 10 seconds.
b. Start engine.
c. Maintain the following conditions for at least 10 consecutive minutes.
   Hold the accelerator pedal as steady as possible.

VHCL SPEED SE	50 – 120 km/h (31 – 75 MPH)

CAUTION:
Always drive vehicle at a safe speed.

d. Check 1st trip DTC.
e. If 1st trip DTC is detected, go to EC-837, "Diagnosis Procedure".

WITH GST

1. Start engine and warm it up to normal operating temperature.
2. Turn ignition switch OFF and wait at least 10 seconds.
3. Disconnect mass air flow sensor (1) harness connector.
4. Restart engine and let idle for at least 5 seconds.
5. Stop engine and reconnect mass air flow sensor harness connector.
6. Select Service $03 with GST. Make sure DTC P0102 is detected.
7. Select Service $04 with GST and erase the DTC P0102.
8. Start engine.
   If it is difficult to start engine, the fuel injection system has a malfunction.
   Perform the following procedure is advised.

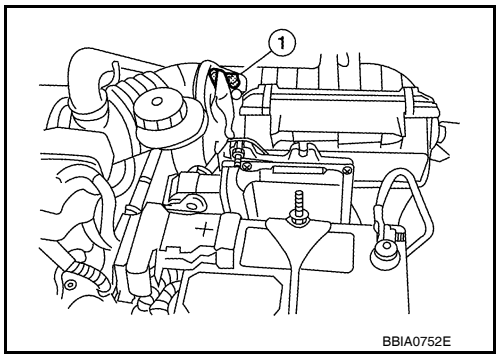

a. Crank engine while depressing accelerator pedal.
   NOTE:
   When depressing accelerator pedal three-fourths (3/4) or more, the control system does not start the engine. Do not depress accelerator pedal too much.
b. If engine starts, go to EC-837, "Diagnosis Procedure".
   If engine does not start, remove ignition plugs and check for fouling, etc.

9. Keep engine at idle for at least 5 minutes.
10. Check 1st trip DTC.
    The 1st trip DTC P0172 should be detected at this stage, if a malfunction exists. If so, go to EC-837, "Diagnosis Procedure".
    NOTE:
    If 1st trip DTC is not detected during above procedure, performing the following procedure is advised.

a. Turn ignition switch OFF and wait at least 10 seconds.
b. Start engine.
c. Maintain the following conditions for at least 10 consecutive minutes.
   Hold the accelerator pedal as steady as possible.

VHCL SPEED SE	50 – 120 km/h (31 – 75 MPH)

CAUTION:
Always drive vehicle at a safe speed.

d. Check 1st trip DTC.
e. If 1st trip DTC is detected, go to EC-837, "Diagnosis Procedure".

Wiring Diagram

INFOID:0000000005285363

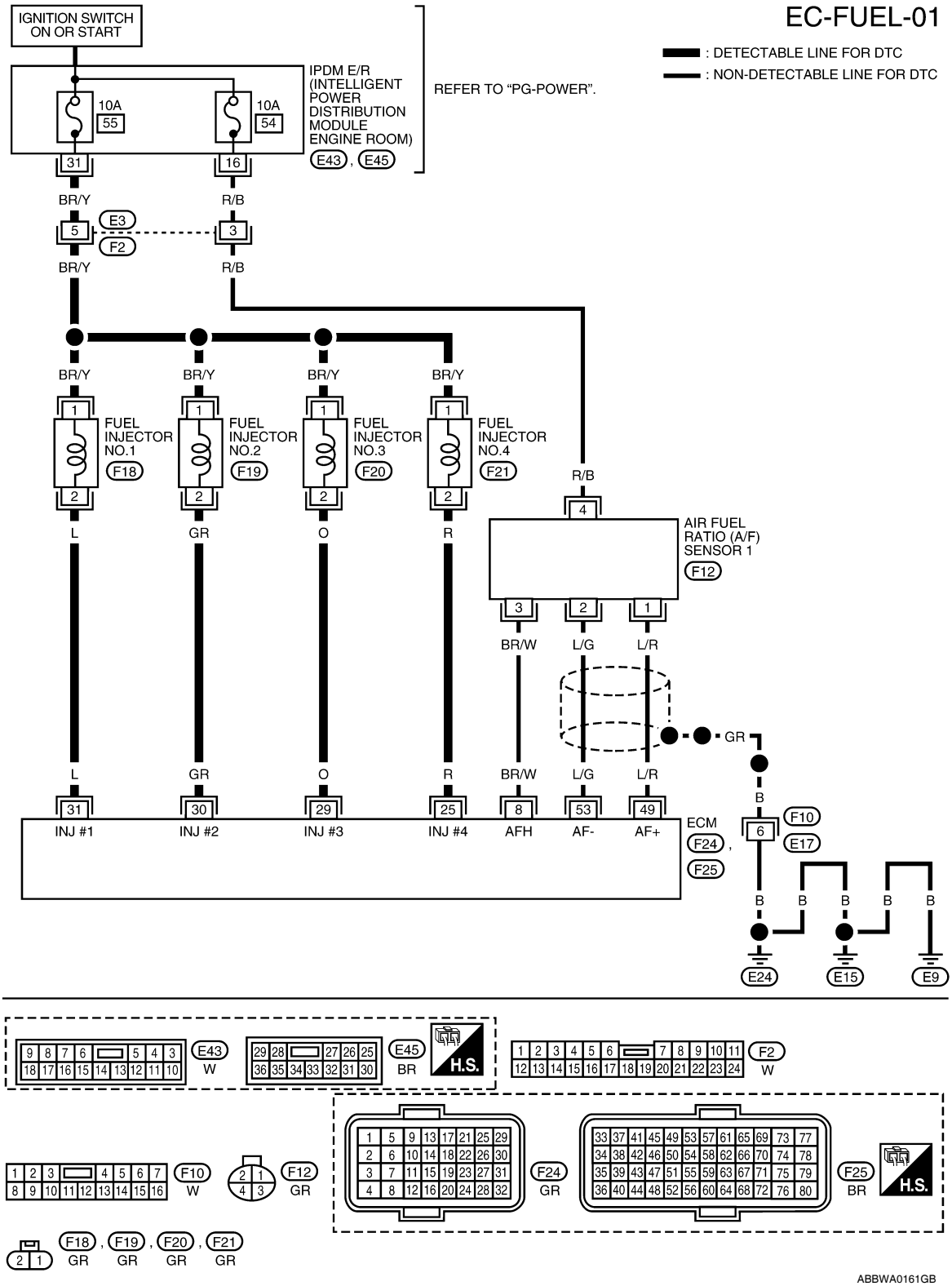

Specification data are reference values and are measured between each terminal and ground.
Pulse signal is measured by CONSULT-III.

CAUTION:

Do not use ECM ground terminals when measuring input/output voltage. Doing so may result in damage to the ECM's transistor. Use a ground other than ECM terminals, such as the ground.

TERMINAL NO.	WIRE COLOR	ITEM	CONDITION	DATA (DC Voltage)
8	BR/W	A/F sensor 1 heater	**[Engine is running]** • **Warm-up condition** • Idle speed (More than 140 seconds after starting engine)	Approximately 2.9 - 8.8 V★ 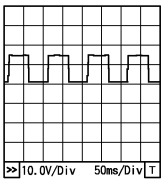 PBIA8148J
25 29 30 31	R O GR L	Fuel injector No. 4 Fuel injector No. 3 Fuel injector No. 2 Fuel injector No. 1	**[Engine is running]** • **Warm-up condition** • Idle speed **NOTE:** The pulse cycle changes depending on rpm at idle	BATTERY VOLTAGE (11 - 14 V)★ 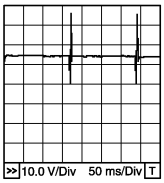 PBIB0529E
			[Engine is running] • **Warm-up condition** • Engine speed: 2,000 rpm	BATTERY VOLTAGE (11 - 14 V)★ 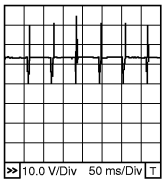 PBIA4943J
49	L/R	A/F sensor 1	**[Engine is running]** • **Warm-up condition** • Engine speed: 2,000 rpm	Approximately 1.8 V Output voltage varies with air fuel ratio.
53	L/G	A/F sensor 1	**[Ignition switch: ON]**	Approximately 2.2 V

★: Average voltage for pulse signal (Actual pulse signal can be confirmed by oscilloscope.)

Diagnosis Procedure

INFOID:0000000005285364

1. CHECK EXHAUST GAS LEAK

1. Start engine and run it at idle.
2. Listen for an exhaust gas leak before three way catalyst (manifold).

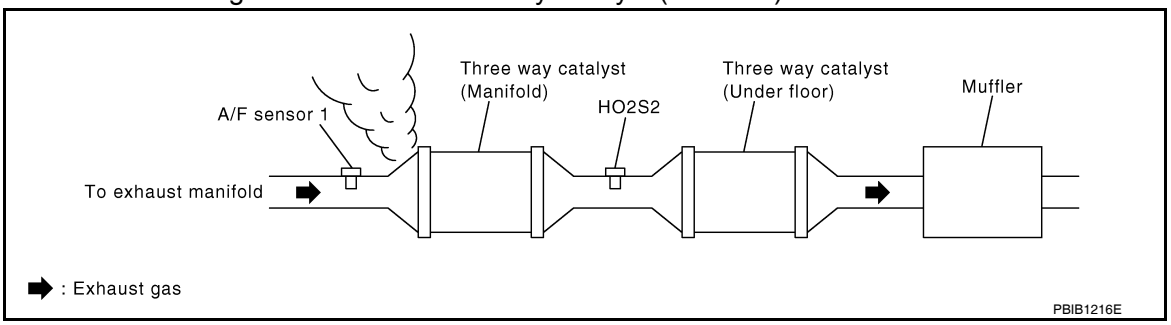

OK or NG

OK >> GO TO 2.
NG >> Repair or replace.

2. CHECK FOR INTAKE AIR LEAK

Listen for an intake air leak after the mass air flow sensor.

OK or NG

OK >> GO TO 3.
NG >> Repair or replace.

3. CHECK AIR FUEL RATIO (A/F) SENSOR 1 CIRCUIT FOR OPEN AND SHORT

1. Turn ignition switch OFF.
2. Disconnect air fuel ratio (A/F) sensor 1 harness connector (1).
- Air fuel ratio (A/F) sensor 1 (2)
3. Disconnect ECM harness connector.
4. Check harness continuity between the following terminals. Refer to Wiring Diagram.

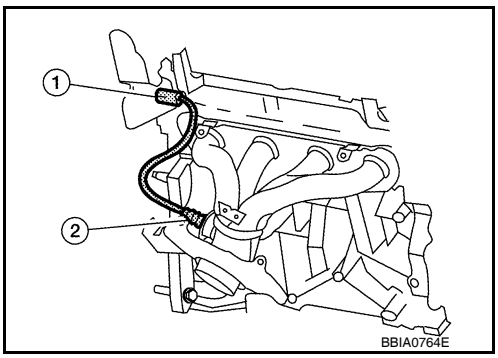

A/F sensor 1 terminal	ECM terminal
1	49
2	53

Continuity should exist.

5. Check harness continuity between ECM terminals 49, 53 or A/F sensor 1 terminals 1, 2 and ground. Refer to Wiring Diagram.

Continuity should not exist.

6. Also check harness for short to power.

OK or NG

OK >> GO TO 4.
NG >> Repair open circuit or short to ground or short to power in harness or connectors.

4. CHECK FUEL PRESSURE

1. Release fuel pressure to zero. Refer to EC-656, "Fuel Pressure Check".
2. Install fuel pressure gauge and check fuel pressure. Refer to EC-656, "Fuel Pressure Check".

At idling: Approximately 350 kPa (3.57 kg/cm2, 51 psi)

OK or NG

OK >> GO TO 6.
NG >> GO TO 5.

5. DETECT MALFUNCTIONING PART

Check the following.
- Fuel pump and circuit (Refer to EC-1094.)
- Fuel pressure regulator (Refer to EC-656, "Fuel Pressure Check".)

>> Repair or replace.

6. CHECK MASS AIR FLOW SENSOR

With CONSULT-III

1. Install all removed parts.
2. Start engine and warm it up to normal operating temperature.
3. Check “MASS AIR FLOW” in “DATA MONITOR” mode with CONSULT-III.

At idling : 1.0 - 4.0 g·m/sec
At 2,500 rpm : 2.0 - 10.0 g·m/sec

With GST

1. Install all removed parts.
2. Start engine and warm it up to normal operating temperature.
3. Check mass air flow sensor signal in Service $01 with GST.

At idling : 1.0 - 4.0 g·m/sec
At 2,500 rpm : 2.0 - 10.0 g·m/sec

OK or NG

OK >> GO TO 7.
NG >> Check connectors for rusted terminals or loose connections in the mass air flow sensor circuit or ground. Refer to EC-739.

7. CHECK FUNCTION OF FUEL INJECTORS

With CONSULT-III

1. Let engine idle.
2. Perform “POWER BALANCE” in “ACTIVE TEST” mode with CONSULT-III.
3. Make sure that each circuit produces a momentary engine speed drop.

Without CONSULT-III

1. Let engine idle.
2. Listen to each fuel injector operating sound.

Clicking noise should be heard.

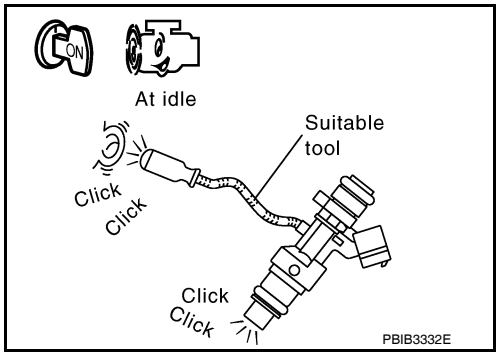

OK or NG

OK >> GO TO 8.
NG >> Perform trouble diagnosis for EC-1089.

8. CHECK FUEL INJECTOR

1. Remove fuel injector assembly. Refer to EM-36.
   Keep fuel hose and all fuel injectors connected to fuel tube.
2. Confirm that the engine is cooled down and there are no fire hazards near the vehicle.
3. Reconnect all harness connectors disconnected.
4. Disconnect all ignition coil harness connectors.
5. Prepare pans or saucers under each fuel injectors.
6. Crank engine for about 3 seconds.
   Make sure fuel does not drip from fuel injector.

OK or NG

OK (Does not drip.)>>GO TO 9.
NG (Drips.)>>Replace the fuel injectors from which fuel is dripping. Always replace O-ring with new one.

9. CHECK INTERMITTENT INCIDENT

Refer to EC-706.

>> **INSPECTION END**

DTC P0181 FTT SENSOR

Component Description

INFOID:0000000005285365

The fuel tank temperature sensor (4) is used to detect the fuel temperature inside the fuel tank. The sensor modifies a voltage signal from the ECM. The modified signal returns to the ECM as the fuel temperature input. The sensor uses a thermistor which is sensitive to the change in temperature. The electrical resistance of the thermistor decreases as temperature increases.

- Fuel level sensor unit and fuel pump (1)
- Fuel pressure regulator (2)
- Fuel level sensor (3)

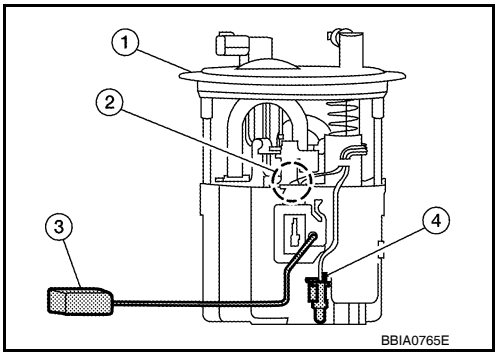

<Reference data>

Fluid temperature [°C (°F)]	Voltage* (V)	Resistance (kΩ)
20 (68)	3.5	2.3 - 2.7
50 (122)	2.2	0.79 - 0.90

*: This data is reference values and is measured between ECM terminal 43 (Fuel tank temperature sensor) and ground.

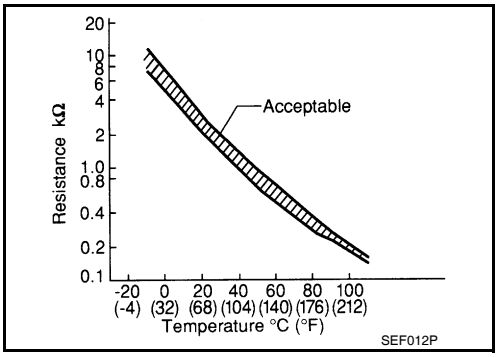

CAUTION:

Do not use ECM ground terminals when measuring input/output voltage. Doing so may result damage the ECM's transistor. Use ground other than ECM, such as ground.

On Board Diagnosis Logic

INFOID:0000000005285366

DTC No.	Trouble diagnosis name	DTC detecting condition	Possible cause
P0181 0181	Fuel tank temperature sensor circuit range/performance	Rationally incorrect voltage from the sensor is sent to ECM, compared with the voltage signals from engine coolant temperature sensor and intake air temperature sensor.	• Harness or connectors (Fuel tank temperature sensor circuit is open or shorted) • Fuel tank temperature sensor

DTC Confirmation Procedure

INFOID:0000000005285367

NOTE:

If DTC Confirmation Procedure has been previously conducted, always turn ignition switch OFF and wait at least 10 seconds before conducting the next test.

WITH CONSULT-III

1. Turn ignition switch ON wait at least 10 seconds.
2. Check 1st trip DTC.
   If 1st trip DTC is detected, go to EC-841, "Diagnosis Procedure".
   If 1st trip DTC is not detected, go to following step.
3. Select “DATA MONITOR” mode with CONSULT-III.
4. Check “COOLAN TEMP/S” value.
   If the “COOLAN TEMP/S” is less than 60°C (140°F), the result will be OK.
   If the “COOLAN TEMP/S” is above 60°C (140°F), go to the following step.
5. Cool engine down until “COOLAN TEMP/S” signal is less than 60°C (140°F).
6. Wait at least 10 seconds.
7. Check 1st trip DTC.
8. If 1st trip DTC is detected, go to EC-841, "Diagnosis Procedure".

WITH GST

Follow the procedure “WITH CONSULT-III” above.

Wiring Diagram

INFOID:0000000005285368

EC-FTTS-01

: DETECTABLE LINE FOR DTC
: NON-DETECTABLE LINE FOR DTC

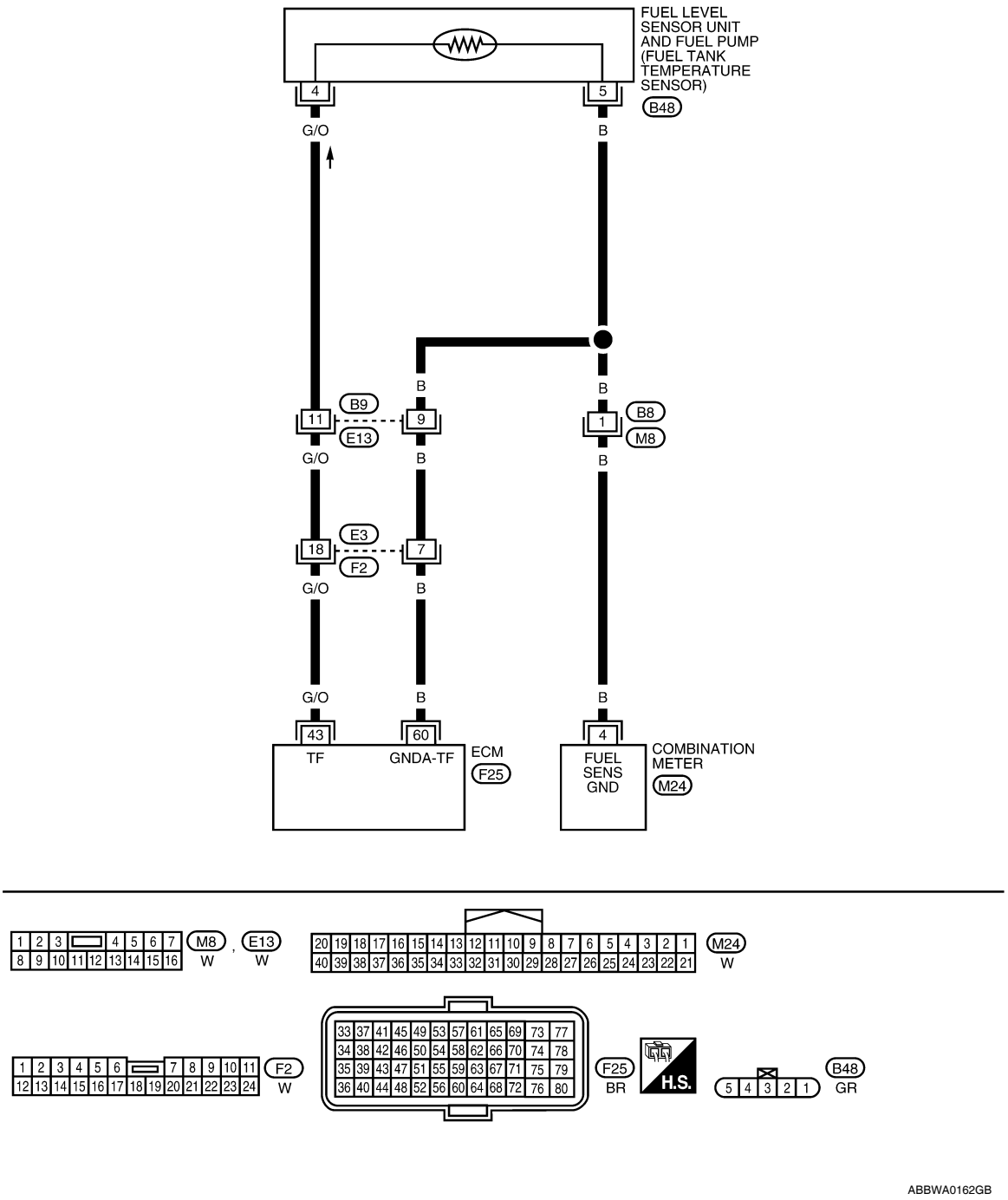

Diagnosis Procedure

INFOID:0000000005285369

1. CHECK GROUND CONNECTIONS

1. Turn ignition switch OFF.

2. Loosen and retighten ground screws on the body.
   Refer to EC-711, "Ground Inspection".
- ⇦ : Vehicle front
- Body ground (1)

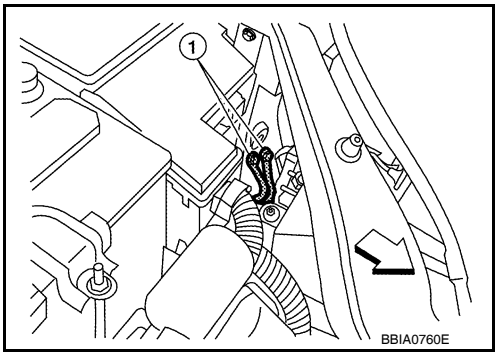

OK or NG

OK >> GO TO 2.
NG >> Repair or replace ground connections.

2. CHECK FUEL TANK TEMPERATURE SENSOR POWER SUPPLY CIRCUIT

1. Turn ignition switch OFF.
2. Disconnect “fuel level sensor unit and fuel pump” harness connector (1).
- ⇦ : Vehicle front
3. Turn ignition switch ON.

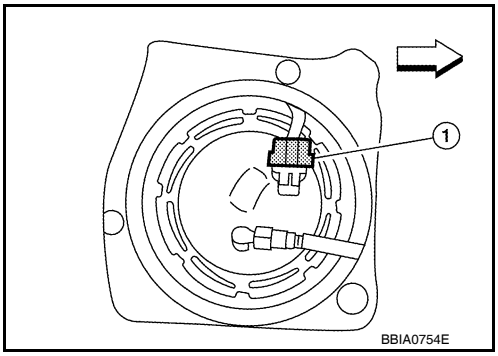

4. Check voltage between “fuel level sensor unit and fuel pump” terminal 4 and ground with CONSULT-III or tester.

Voltage: Approximately 5 V

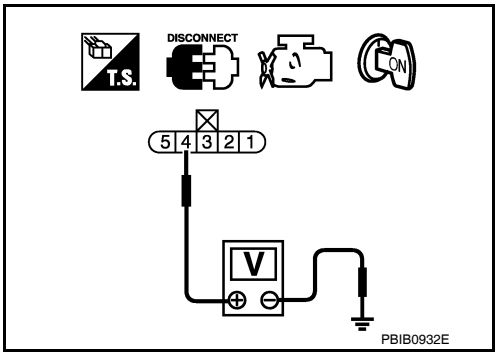

OK or NG

OK >> GO TO 4.
NG >> GO TO 3.

3. DETECT MALFUNCTIONING PART

Check the following.
- Harness connectors B9, E13
- Harness connectors E3, F2
- Harness for open or short between ECM and “fuel level sensor unit and fuel pump”

>> Repair open circuit or short to ground or short to power in harness or connector.

4. CHECK FUEL TANK TEMPERATURE SENSOR GROUND CIRCUIT FOR OPEN AND SHORT

1. Turn ignition switch OFF.
2. Disconnect combination meter harness connector.
3. Check harness continuity between “fuel level sensor unit and fuel pump” terminal 5 and combination meter terminal 4, ECM terminal 60. Refer to Wiring Diagram.

Continuity should exist.

4. Also check harness for short to ground and short to power.

OK or NG

OK >> GO TO 6.
NG >> GO TO 5.

5. DETECT MALFUNCTIONING PART

Check the following.
- Harness connectors B8, M8
- Harness connectors B9, E13
- Harness connectors E3, F2
- Harness for open or short between “fuel level sensor unit and fuel pump” and combination meter.
- Harness for open or short between “fuel level sensor unit and fuel pump” and ECM.

>> Repair open circuit or short to ground or short to power in harness or connectors.

6. CHECK FUEL TANK TEMPERATURE SENSOR

Refer to, EC-843, "Component Inspection".

OK or NG

OK >> GO TO 7.
NG >> Replace “fuel level sensor unit and fuel pump”.

7. CHECK INTERMITTENT INCIDENT

Perform EC-706.

>> **INSPECTION END**

Component Inspection

INFOID:0000000005285370

FUEL TANK TEMPERATURE SENSOR

1. Check resistance between “fuel level sensor unit and fuel pump” terminal 4 and 5 by heating with hot water as shown in the figure.

Temperature [°C (°F)]	Resistance (kΩ)
20 (68)	2.3 - 2.7
50 (122)	0.79 - 0.90

2. If NG, replace “fuel level sensor unit and fuel pump”.

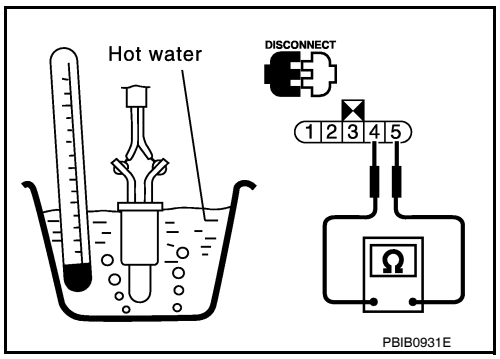

Removal and Installation

INFOID:0000000005285371

FUEL TANK TEMPERATURE SENSOR

Refer to FL-6.

DTC P0182, P0183 FTT SENSOR

Component Description

INFOID:0000000005285372

The fuel tank temperature sensor (4) is used to detect the fuel temperature inside the fuel tank. The sensor modifies a voltage signal from the ECM. The modified signal returns to the ECM as the fuel temperature input. The sensor uses a thermistor which is sensitive to the change in temperature. The electrical resistance of the thermistor decreases as temperature increases.

- Fuel level sensor unit and fuel pump (1)
- Fuel pressure regulator (2)
- Fuel level sensor (3)

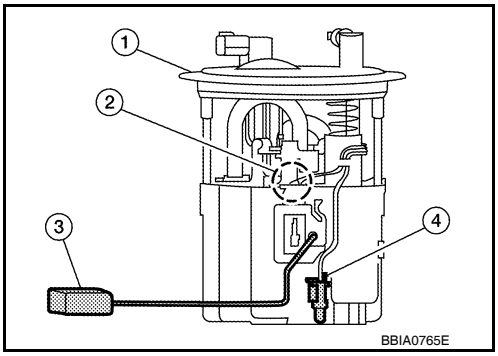

<Reference data>

Fluid temperature [°C (°F)]	Voltage* (V)	Resistance (kΩ)
20 (68)	3.5	2.3 - 2.7
50 (122)	2.2	0.79 - 0.90

*: This data is reference values and is measured between ECM terminal 43 (Fuel tank temperature sensor) and ground.

CAUTION:

Do not use ECM ground terminals when measuring input/output voltage. Doing so may result damage the ECM's transistor. Use ground other than ECM, such as ground.

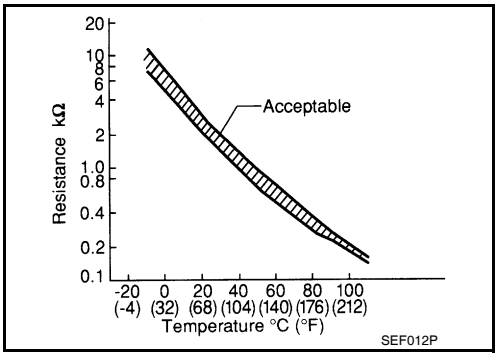

On Board Diagnosis Logic

INFOID:0000000005285373

DTC No.	Trouble diagnosis name	DTC detecting condition	Possible cause
P0182 0182	Fuel tank temperature sensor circuit low input	An excessively low voltage from the sensor is sent to ECM.	• Harness or connectors (Fuel tank temperature sensor circuit is open or shorted.) • Fuel tank temperature sensor
P0183 0183	Fuel tank temperature sensor circuit high input	An excessively high voltage from the sensor is sent to ECM.	

DTC Confirmation Procedure

INFOID:0000000005285374

NOTE:

If DTC Confirmation Procedure has been previously conducted, always turn ignition switch OFF and wait at least 10 seconds before conducting the next test.

1. Turn ignition switch ON and wait at least 5 seconds.
2. Check 1st trip DTC.
3. If 1st trip DTC is detected, go to EC-845, "Diagnosis Procedure".

Wiring Diagram

INFOID:0000000005285375

EC-FTTS-01

: DETECTABLE LINE FOR DTC
: NON-DETECTABLE LINE FOR DTC

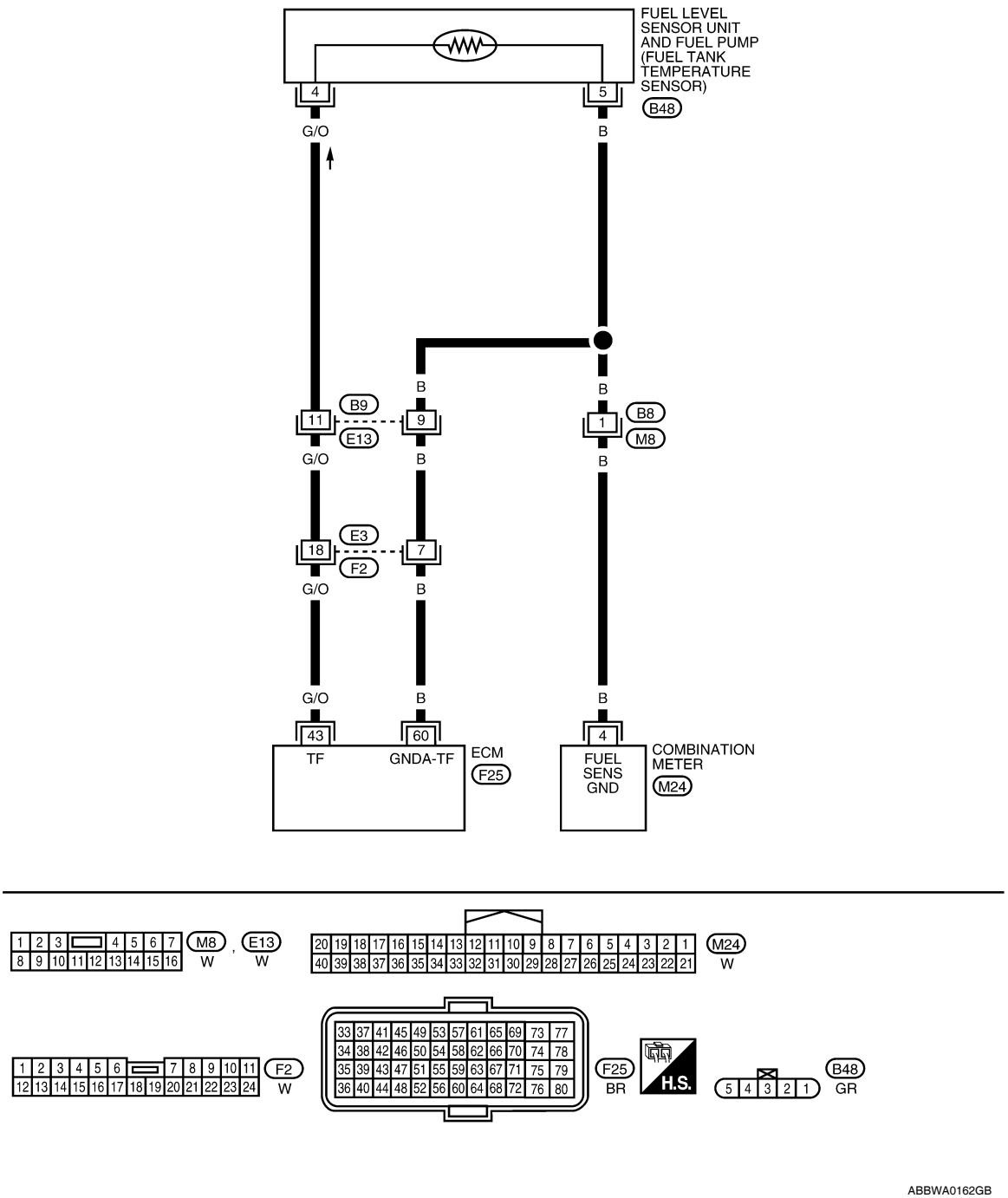

Diagnosis Procedure

INFOID:0000000005285376

1. CHECK GROUND CONNECTIONS

1. Turn ignition switch OFF.

2. Loosen and retighten ground screw on the body.
   Refer to EC-711, "Ground Inspection".
- ⇦ : Vehicle front
- Body ground (1)

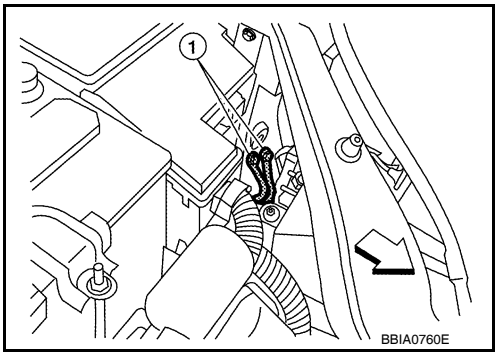

OK or NG

OK >> GO TO 2.
NG >> Repair or replace ground connections.

2. CHECK FUEL TANK TEMPERATURE SENSOR POWER SUPPLY CIRCUIT

1. Disconnect “fuel level sensor unit and fuel pump” harness connector (1).
- ⇦ : Vehicle front
2. Turn ignition switch ON.

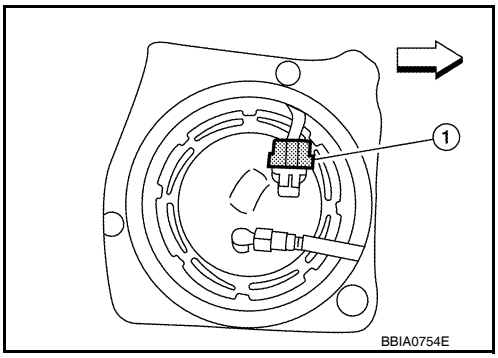

3. Check voltage between “fuel level sensor unit and fuel pump” terminal 4 and ground with CONSULT-III or tester.

Voltage: Approximately 5 V

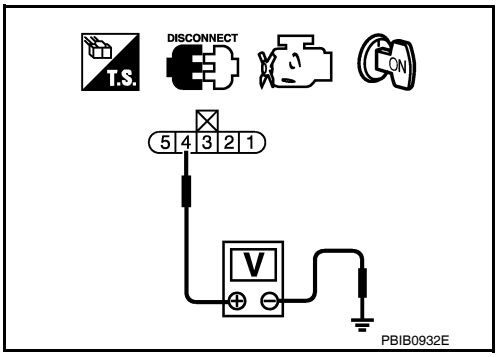

OK or NG

OK >> GO TO 4.
NG >> GO TO 3.

3. DETECT MALFUNCTIONING PART

Check the following.
- Harness connectors B9, E13
- Harness connectors E3, F2
- Harness for open or short to ground or short between ECM and “fuel level sensor unit and fuel pump”

>> Repair open circuit or short to ground or short to power in harness or connector.

4. CHECK FUEL TANK TEMPERATURE SENSOR GROUND CIRCUIT FOR OPEN AND SHORT

1. Turn ignition switch OFF.
2. Disconnect combination meter harness connector.
3. Check harness continuity between “fuel level sensor unit and fuel pump” terminal 5 and combination meter terminal 4, ECM terminal 60. Refer to Wiring Diagram.

Continuity should exist.

4. Also check harness for short to ground and short to power.

OK or NG

OK >> GO TO 6.
NG >> GO TO 5.

5. DETECT MALFUNCTIONING PART

Check the following.
- Harness connectors B8, M8
- Harness connectors B9, E13
- Harness connectors E3, F2
- Harness for open or short between “fuel level sensor unit and fuel pump” and combination meter
- Harness for open or short between “fuel level sensor unit and fuel pump” and ECM

>> Repair open circuit or short to ground or short to power in harness or connector.

6. CHECK FUEL TANK TEMPERATURE SENSOR

Refer to, EC-847, "Component Inspection".

OK or NG

OK >> GO TO 7.
NG >> Replace “fuel level sensor unit and fuel pump”.

7. CHECK INTERMITTENT INCIDENT

Perform EC-706.

>> **INSPECTION END**

Component Inspection

INFOID:0000000005285377

FUEL TANK TEMPERATURE SENSOR

1. Check resistance between “fuel level sensor unit and fuel pump” terminal 4 and 5 by heating with hot water as shown in the figure.

Temperature [°C (°F)]	Resistance (kΩ)
20 (68)	2.3 - 2.7
50 (122)	0.79 - 0.90

2. If NG, replace “fuel level sensor unit and fuel pump”.

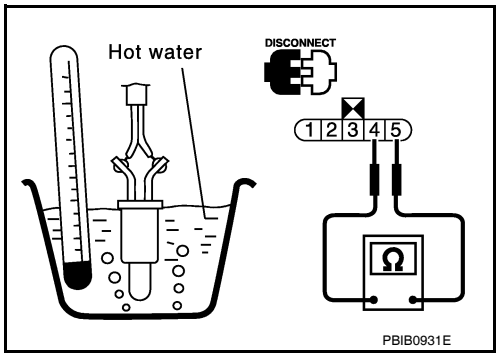

Removal and Installation

INFOID:0000000005285378

FUEL TANK TEMPERATURE SENSOR

Refer to FL-6.

DTC P0196 EOT SENSOR

Component Description

INFOID:0000000005450783

The engine oil temperature sensor is used to detect the engine oil temperature. The sensor modifies a voltage signal from the ECM. The modified signal returns to the ECM as the engine oil temperature input. The sensor uses a thermistor which is sensitive to the change in temperature. The electrical resistance of the thermistor decreases as temperature increases.

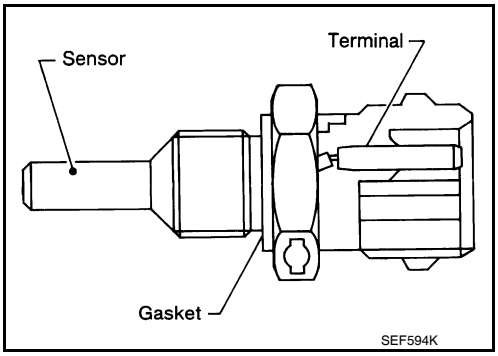

<Reference data>

Engine coolant temperature [°C (°F)]	Voltage* (V)	Resistance (kΩ)
–10 (14)	4.4	7.0 - 11.4
20 (68)	3.5	2.37 - 2.63
50 (122)	2.2	0.68 - 1.00
90 (194)	0.9	0.236 - 0.260
110 (230)	0.6	0.143 - 0.153
150 (302)	0.3	0.050 - 0.065

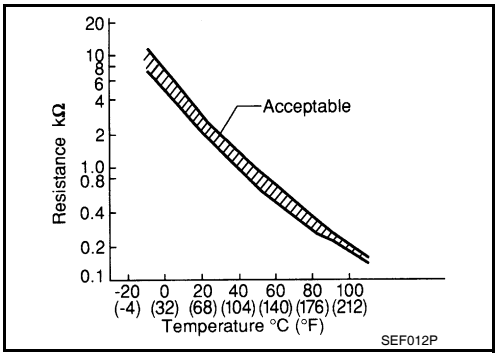

*: This data is reference values and is measured between ECM terminal 27 (Engine oil temperature sensor) and ground.

CAUTION:

Do not use ECM ground terminals when measuring input/output voltage. Doing so may result in damage to the ECM's transistor. Use a ground other than ECM terminals, such as the ground.

On Board Diagnosis Logic

INFOID:0000000005450784

DTC No.	Trouble diagnosis name	DTC detecting condition	Possible cause
P0196 0196	Engine oil temperature sensor range/performance	Rationally incorrect voltage from the sensor is sent to ECM, compared with the voltage signals from engine coolant temperature sensor and intake air temperature sensor.	• Harness or connectors (The sensor circuit is open or shorted) • Engine oil temperature sensor

DTC Confirmation Procedure

INFOID:0000000005450785

NOTE:

If DTC Confirmation Procedure has been previously conducted, always turn ignition switch OFF and wait at least 10 seconds before conducting the next test.

TESTING CONDITION:

Before performing the following procedure, confirm that battery voltage is more than 11V at idle.

WITH CONSULT-III

1. Start engine and warm it up to normal operating temperature.
2. Turn ignition switch OFF and wait at least 10 seconds.
3. Start engine and let it idle for 5 minutes and 10 seconds.
4. Check 1st trip DTC.
   If 1st trip DTC is detected, go to EC-849, "Diagnosis Procedure".
   If 1st trip DTC is not detected, go to following steps.
5. Select “DATA MONITOR” mode with CONSULT-III.

6. Check that “COOLAN TEMP/S” indicates above 70°C (158°F).
   If it is above 70°C (158°F), go to the following steps.
   If it is below 70°C (158°F), warm engine up until “COOLAN TEMP/S” indicates more than 70°C (158°F). Then go to the following steps.
7. Turn ignition switch OFF and soak the vehicle at cool place.
8. Turn ignition switch ON.
   NOTE:
   Do not turn ignition switch OFF until step 12
9. Select “DATA MONITOR” mode with CONSULT-III.
10. Check the following.

COOLAN TEMP/S	Below 40°C (104°F)
INT/A TEMP SE	Below 40°C (104°F)
Difference between “COOLAN TEMP/S” and “INT/A TEMP SE”	Within 6°C (11°F)

   If they are within the specified range, go to following steps.
   If they are out of the specified range, soak the vehicle to met the above conditions. Then go to following steps.
   NOTE:
   - **Do not turn ignition switch OFF.**
   - **If it is supposed to need a long period of time, do not deplete the battery.**
11. Start engine and let it idle for 5 minutes.
12. Check 1st trip DTC.
13. If 1st trip DTC is detected, go to EC-849, "Diagnosis Procedure".

WITH GST

Follow the procedure “WITH CONSULT-III” above.

Diagnosis Procedure

INFOID:0000000005450786

1. CHECK GROUND CONNECTIONS

1. Turn ignition switch OFF.
2. Loosen and retighten ground screws on the body.
   Refer to EC-157, "Ground Inspection".

- ⇦ : Vehicle front
- Body ground (1)

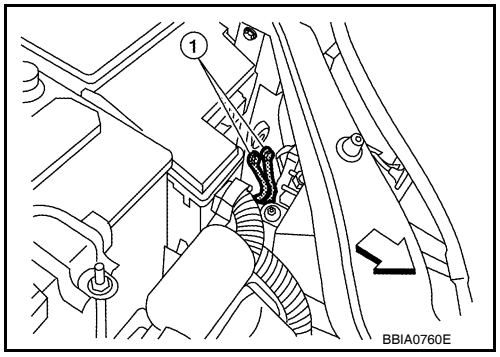

OK or NG

OK >> GO TO 2.
NG >> Repair or replace ground connections.

2. CHECK ENGINE OIL TEMPERATURE SENSOR

Refer to EC-850, "Component Inspection".

OK or NG

OK >> GO TO 3.
NG >> Replace engine oil temperature sensor.

3. CHECK INTERMITTENT INCIDENT

Refer to EC-152.
Refer to EC-299, "Wiring Diagram".

>> **INSPECTION END**

Component Inspection

INFOID:0000000005450787

ENGINE OIL TEMPERATURE SENSOR

1. Check resistance between engine oil temperature sensor terminals 1 and 2 as shown in the figure.

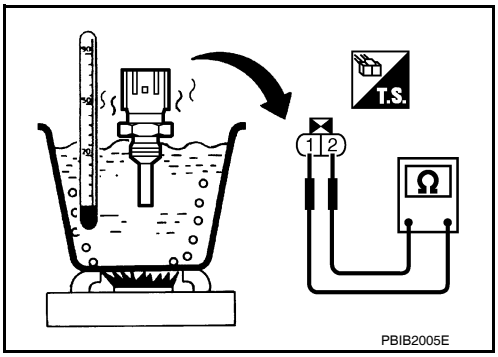

<Reference data>

Engine coolant temperature [°C (°F)]	Resistance (kΩ)
20 (68)	2.37 - 2.63
50 (122)	0.68 - 1.00
90 (194)	0.236 - 0.260

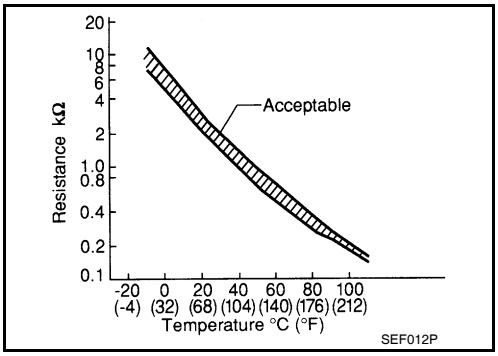

2. If NG, replace engine oil temperature sensor.

Removal and Installation

INFOID:0000000005450788

ENGINE OIL TEMPERATURE SENSOR

Refer to EM-80, "Component".

DTC P0197, P0198 EOT SENSOR

Component Description

INFOID:0000000005522752

The engine oil temperature sensor is used to detect the engine oil temperature. The sensor modifies a voltage signal from the ECM. The modified signal returns to the ECM as the engine oil temperature input. The sensor uses a thermistor which is sensitive to the change in temperature. The electrical resistance of the thermistor decreases as temperature increases.

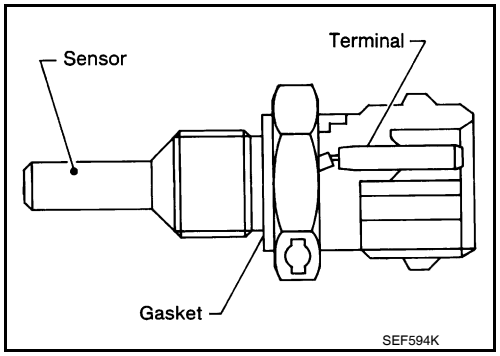

<Reference data>

Engine coolant temperature [°C (°F)]	Voltage* (V)	Resistance (kΩ
–10 (14)	4.4	7.0 - 11.4
20 (68)	3.5	2.37 - 2.63
50 (122)	2.2	0.68 - 1.00
90 (194)	0.9	0.236 - 0.260
110 (230)	0.6	0.143 - 0.153
150 (302)	0.3	0.050 - 0.065

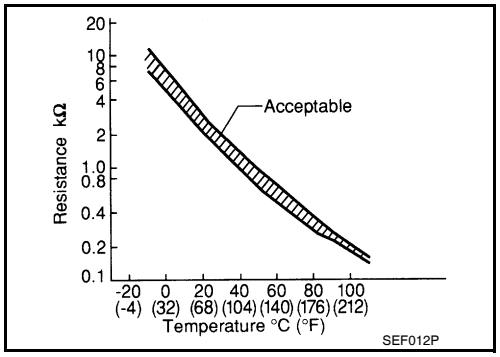

*: This data is reference values and is measured between ECM terminal 27 (Engine oil temperature sensor) and ground.

CAUTION:

Do not use ECM ground terminals when measuring input/output voltage. Doing so may result in damage to the ECM's transistor. Use a ground other than ECM terminals, such as the ground.

On Board Diagnosis Logic

INFOID:0000000005522753

DTC No.	Trouble Diagnosis Name	DTC Detecting Condition	Possible Cause
P0197 0197	Engine oil temperature sensor circuit low input	An excessively low voltage from the sensor is sent to ECM.	• Harness or connectors (Engine oil temperature sensor circuit is open or shorted.) • Engine oil temperature sensor
P0198 0198	Engine oil temperature sensor circuit high input	An excessively high voltage from the sensor is sent to ECM.	

DTC Confirmation Procedure

INFOID:0000000005522754

NOTE:

If DTC Confirmation Procedure has been previously conducted, always turn ignition switch OFF and wait at least 10 seconds before conducting the next test.

1. Start engine and wait at least 5 seconds.
2. Check 1st trip DTC.
3. If 1st trip DTC is detected, go to EC-852, "Diagnosis Procedure".

Wiring Diagram

INFOID:0000000005483781

EC-EOTS-01

: DETECTABLE LINE FOR DTC
: NON-DETECTABLE LINE FOR DTC

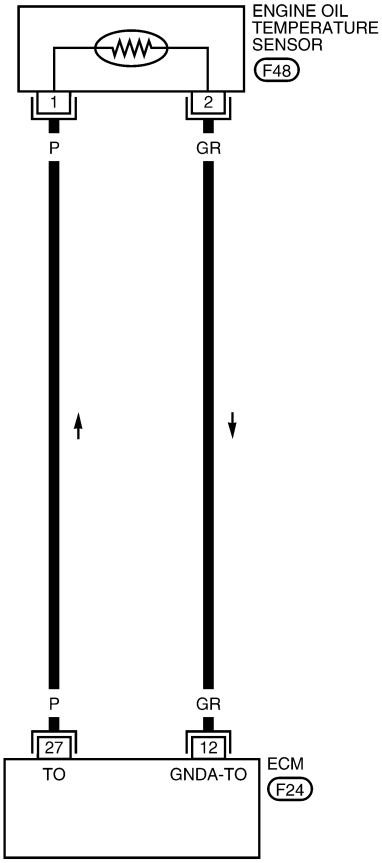

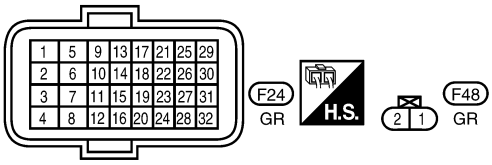

AABWA0303GB

Diagnosis Procedure

INFOID:0000000005522756

1. CHECK GROUND CONNECTIONS

1. Turn ignition switch OFF.

2. Loosen and retighten ground screws on the body.
   Refer to EC-157, "Ground Inspection".
- ⇦ : Vehicle front
- Body ground (1)

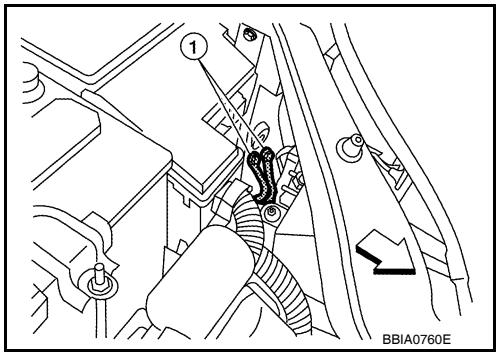

OK or NG

OK >> GO TO 2.
NG >> Repair or replace ground connections.

2. CHECK EOT SENSOR POWER SUPPLY CIRCUIT

1. Disconnect engine oil temperature (EOT) sensor harness connector.
2. Turn ignition switch ON.
3. Check voltage between EOT sensor terminal 1 and ground with CONSULT-III or tester.

Voltage: Approximately 5 V

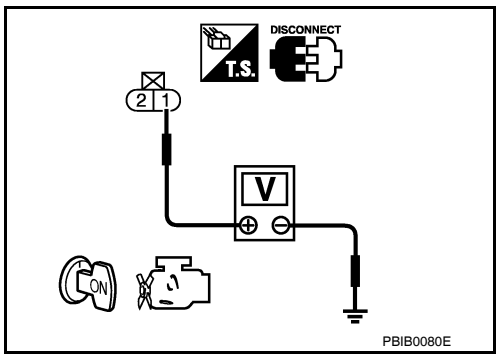

OK or NG

OK >> GO TO 3.
NG >> Repair open circuit or short to ground or short to power in harness or connectors.

3. CHECK EOT SENSOR GROUND CIRCUIT FOR OPEN AND SHORT

1. Turn ignition switch OFF.
2. Disconnect ECM harness connector.
3. Check harness continuity between ECM terminal 12 and ECT sensor terminal 2.
   Refer to Wiring Diagram.

Continuity should exist.

4. Also check harness for short to ground and short to power.

OK or NG

OK >> GO TO 4.
NG >> Repair open circuit or short to ground or short to power in harness or connectors.

4. CHECK ENGINE OIL TEMPERATURE SENSOR

Refer to EC-853, "Component Inspection".

OK or NG

OK >> GO TO 5.
NG >> Replace engine oil temperature sensor.

5. CHECK INTERMITTENT INCIDENT

Refer to EC-152.

>> **INSPECTION END**

Component Inspection

INFOID:0000000005522757

ENGINE OIL TEMPERATURE SENSOR

1. Check resistance between engine oil temperature sensor terminals 1 and 2 as shown in the figure.

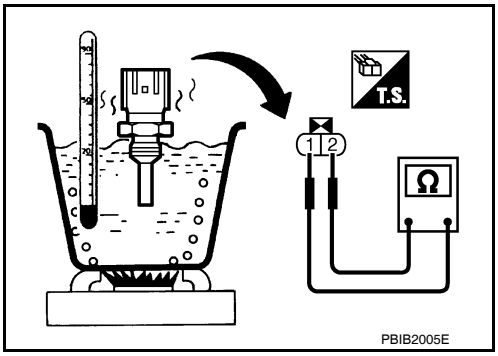

<Reference data>

Engine coolant temperature [°C (°F)]	Resistance (kΩ)
20 (68)	2.37 - 2.63
50 (122)	0.68 - 1.00
90 (194)	0.236 - 0.260

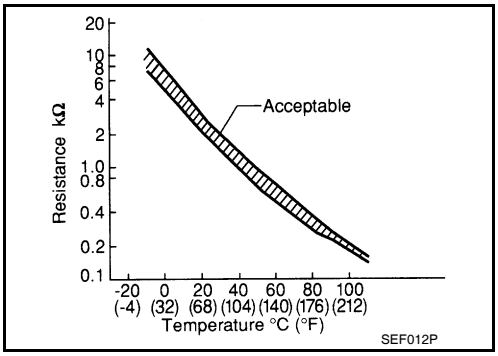

2. If NG, replace engine oil temperature sensor.

Removal and Installation

INFOID:0000000005522758

ENGINE OIL TEMPERATURE SENSOR
Refer to EM-80, "Component".

DTC P0222, P0223 TP SENSOR

Component Description

INFOID:0000000005285379

Electric throttle control actuator consists of throttle control motor, throttle position sensor, etc. The throttle position sensor responds to the throttle valve movement.
The throttle position sensor has two sensors. These sensors are a kind of potentiometers which transform the throttle valve position into output voltage, and emit the voltage signal to the ECM. In addition, these sensors detect the opening and closing speed of the throttle valve and feed the voltage signals to the ECM. The ECM judges the current opening angle of the throttle valve from these signals and the ECM controls the throttle control motor to make the throttle valve opening angle properly in response to driving condition.

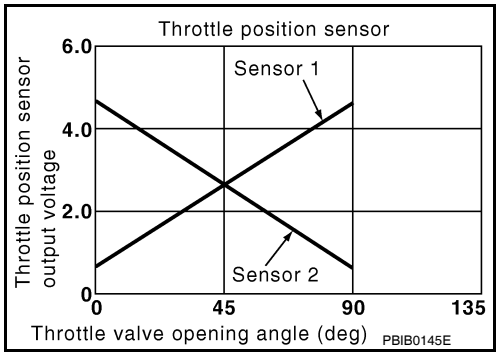

CONSULT-III Reference Value in Data Monitor Mode

INFOID:0000000005285380

Specification data are reference values.

Monitor item	Condition		Specification
TP SEN 1-B1 TP SEN 2-B1*	• Ignition switch: ON (Engine stopped) • Shift lever: D (CVT), 1st (M/T)	Accelerator pedal: Fully released	More than 0.36 V
		Accelerator pedal: Fully depressed	Less than 4.75 V

*: Throttle position sensor 2 signal is converted by ECM internally. Thus, it differs from ECM terminal voltage signal.

On Board Diagnosis Logic

INFOID:0000000005285381

These self-diagnoses have the one trip detection logic.

DTC No.	Trouble diagnosis name	DTC detecting condition	Possible cause
P0222 0222	Throttle position sensor 1 circuit low input	An excessively low voltage from the TP sensor 1 is sent to ECM.	• Harness or connectors (TP sensor 1 circuit is open or shorted.) (APP sensor 2 circuit is shorted.) • Electric throttle control actuator (TP sensor 1) • Accelerator pedal position sensor (APP sensor 2)
P0223 0223	Throttle position sensor 1 circuit high input	An excessively high voltage from the TP sensor 1 is sent to ECM.	

FAIL-SAFE MODE

When the malfunction is detected, the ECM enters fail-safe mode and the MIL lights up.

Engine operation condition in fail-safe mode
The ECM controls the electric throttle control actuator in regulating the throttle opening in order for the idle position to be within +10 degrees. The ECM regulates the opening speed of the throttle valve to be slower than the normal condition. So, the acceleration will be poor.

DTC Confirmation Procedure

INFOID:0000000005285382

NOTE:
If DTC Confirmation Procedure has been previously conducted, always turn ignition switch OFF and wait at least 10 seconds before conducting the next test.
TESTING CONDITION:
Before performing the following procedure, confirm that battery voltage is more than 8 V at idle.

1. Start engine and let it idle for 1 second.
2. Check DTC.
3. If DTC is detected, go to EC-857, "Diagnosis Procedure".

Wiring Diagram

INFOID:0000000005285383

EC-TPS1-01

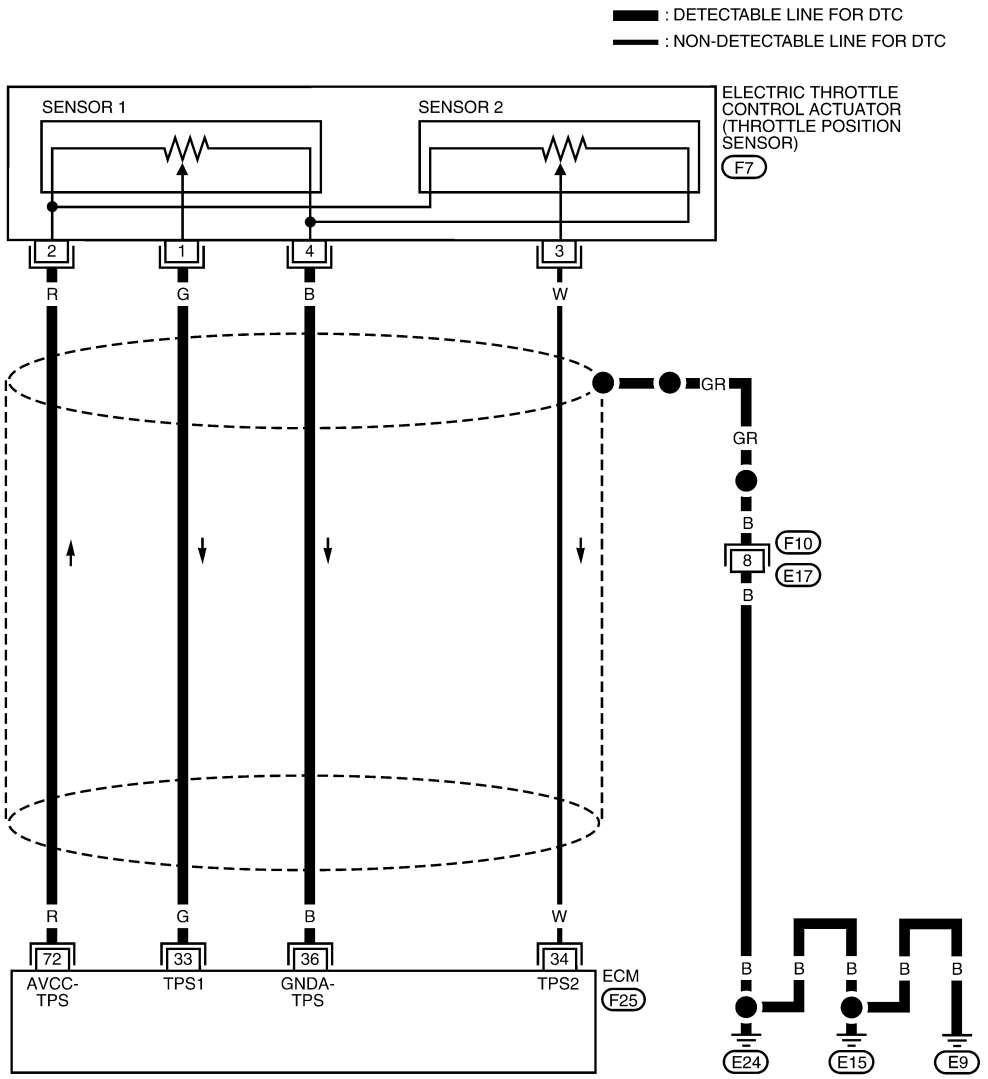

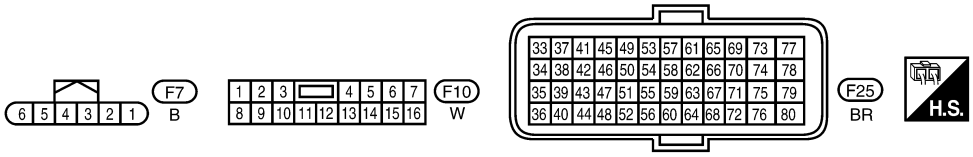

ABBWA0163GB

Specification data are reference values and are measured between each terminal and ground.

CAUTION:

Do not use ECM ground terminals when measuring input/output voltage. Doing so may result in damage to the ECM's transistor. Use a ground other than ECM terminals, such as the ground.

TERMINAL NO.	WIRE COLOR	ITEM	CONDITION	DATA (DC Voltage)
33	Y/B	Throttle position sensor 1	**[Ignition switch: ON]** • Engine stopped • Shift lever: D (CVT), 1st (M/T) • Accelerator pedal: Fully released	More than 0.36 V
			[Ignition switch: ON] • Engine stopped • Shift lever: D (CVT), 1st (M/T) • Accelerator pedal: Fully depressed	Less than 4.75 V
34	R/W	Throttle position sensor 2	**[Ignition switch: ON]** • Engine stopped • Shift lever: D (CVT), 1st (M/T) • Accelerator pedal: Fully released	Less than 4.75 V
			[Ignition switch: ON] • Engine stopped • Shift lever: D (CVT), 1st (M/T) • Accelerator pedal: Fully depressed	More than 0.36 V
36	BR/W	Sensor ground (Throttle position sensor)	**[Engine is running]** • **Warm-up condition** • Idle speed	Approximately 0 V
72	BR	Sensor power supply (Throttle position sensor)	**[Ignition switch: ON]**	Approximately 5 V

Diagnosis Procedure

INFOID:0000000005285384

1. CHECK GROUND CONNECTIONS

1. Turn ignition switch OFF.
2. Loosen and retighten ground screws on the body.
   Refer to EC-711, "Ground Inspection".

- ⇦: Vehicle front
- Body ground (1)

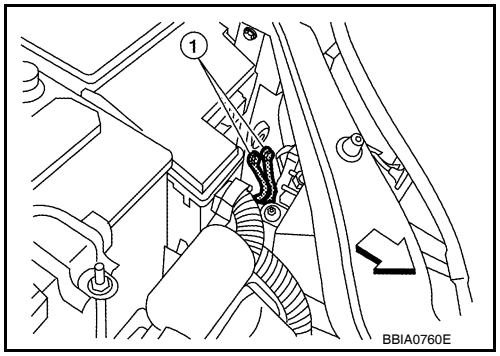

OK or NG

OK >> GO TO 2.
NG >> Repair or replace ground connections.

2. CHECK THROTTLE POSITION SENSOR 1 POWER SUPPLY CIRCUIT-I

1. Disconnect electric throttle control actuator (1) harness connector.
2. Turn ignition switch ON.

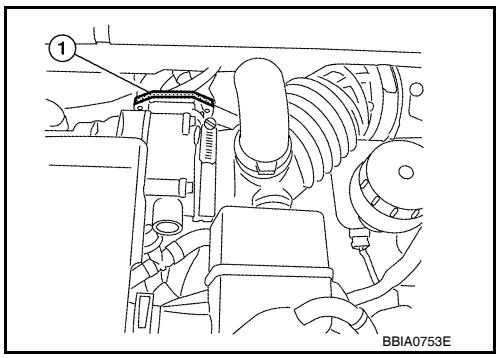

3. Check voltage between electric throttle control actuator terminal 2 and ground with CONSULT-III or tester.

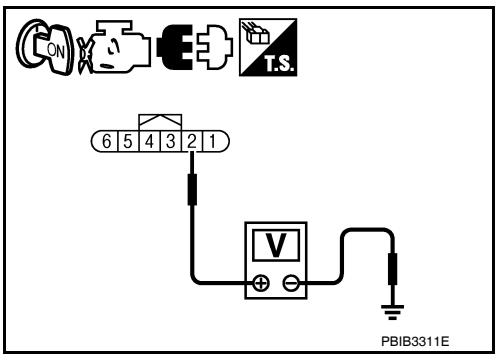

Voltage: Approximately 5 V

OK or NG

OK >> GO TO 3.
NG >> Repair open circuit or short to ground or short to power in harness connectors.

3. CHECK THROTTLE POSITION SENSOR 1 GROUND CIRCUIT FOR OPEN AND SHORT

1. Turn ignition switch OFF.
2. Disconnect ECM harness connector.
3. Check harness continuity between ECM terminal 36 and electric throttle control actuator terminal 4. Refer to Wiring Diagram.

Continuity should exist.

4. Also check harness for short to ground or short to power.

OK or NG

OK >> GO TO 4.
NG >> Repair open circuit or short to ground or short to power in harness or connectors.

4. CHECK THROTTLE POSITION SENSOR 1 INPUT SIGNAL CIRCUIT FOR OPEN AND SHORT

1. Check harness continuity between ECM terminal 33 and electric throttle control actuator terminal 1. Refer to Wiring Diagram.

Continuity should exist.

2. Also check harness for short to ground and short to power.

OK or NG

OK >> GO TO 5.
NG >> Repair open circuit or short to ground or short to power in harness or connectors.

5. CHECK THROTTLE POSITION SENSOR

Refer to EC-858, "Component Inspection".

OK or NG

OK >> GO TO 7.
NG >> GO TO 6.

6. REPLACE ELECTRIC THROTTLE CONTROL ACTUATOR

1. Replace the electric throttle control actuator.
2. Perform EC-654, "Throttle Valve Closed Position Learning".
3. Perform EC-654, "Idle Air Volume Learning".

>> **INSPECTION END**

7. CHECK INTERMITTENT INCIDENT

Refer to EC-706.

>> **INSPECTION END**

Component Inspection

INFOID:0000000005285385

THROTTLE POSITION SENSOR

1. Reconnect all harness connectors disconnected.

2. Perform EC-654, "Throttle Valve Closed Position Learning".
3. Turn ignition switch ON.
4. Set shift lever to D position (CVT) or 1st position (M/T).
5. Check voltage between ECM terminals 33 (TP sensor 1 signal), 34 (TP sensor 2 signal) and ground under the following conditions.

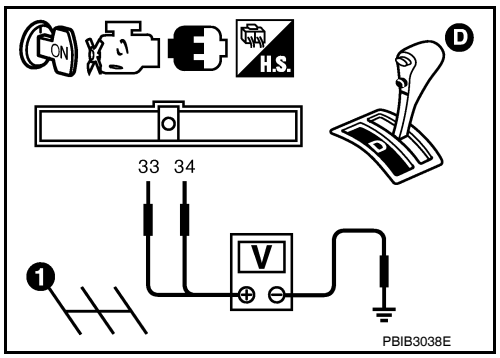

Terminal	Accelerator pedal	Voltage
33 (Throttle position sensor 1)	Fully released	More than 0.36 V
	Fully depressed	Less than 4.75 V
34 (Throttle position sensor 2)	Fully released	Less than 4.75 V
	Fully depressed	More than 0.36 V

6. If NG, replace electric throttle control actuator and go to the next step.
7. Perform EC-654, "Throttle Valve Closed Position Learning".
8. Perform EC-654, "Idle Air Volume Learning".

Removal and Installation

INFOID:0000000005285386

ELECTRIC THROTTLE CONTROL ACTUATOR

Refer to EM-18.

DTC P0300 - P0304 MULTIPLE CYLINDER MISFIRE, NO. 1 - 4 CYLINDER MISFIRE

On Board Diagnosis Logic

INFOID:0000000005285387

When a misfire occurs, engine speed will fluctuate. If the engine speed fluctuates enough to cause the crankshaft position (CKP) sensor (POS) signal to vary, ECM can determine that a misfire is occurring.

Sensor	Input Signal to ECM	ECM function
Crankshaft position sensor (POS)	Engine speed	On board diagnosis of misfire

The misfire detection logic consists of the following two conditions.

1. One Trip Detection Logic (Three Way Catalyst Damage)
   On the 1st trip, when a misfire condition occurs that can damage the three way catalyst (TWC) due to overheating, the MIL will blink.
   When a misfire condition occurs, the ECM monitors the CKP sensor (POS) signal every 200 engine revolutions for a change.
   When the misfire condition decreases to a level that will not damage the TWC, the MIL will turn off.
   If another misfire condition occurs that can damage the TWC on a second trip, the MIL will blink.
   When the misfire condition decreases to a level that will not damage the TWC, the MIL will remain on.
   If another misfire condition occurs that can damage the TWC, the MIL will begin to blink again.
2. Two Trip Detection Logic (Exhaust quality deterioration)
   For misfire conditions that will not damage the TWC (but will affect vehicle emissions), the MIL will only light when the misfire is detected on a second trip. During this condition, the ECM monitors the CKP sensor signal every 1,000 engine revolutions.
   A misfire malfunction can be detected on any one cylinder or on multiple cylinders.

DTC No.	Trouble diagnosis name	DTC detecting condition	Possible cause
P0300 0300	Multiple cylinder misfire detected	Multiple cylinder misfire.	• Improper spark plug • Insufficient compression • Incorrect fuel pressure • Fuel injector circuit is open or shorted • Fuel injector • Intake air leak • The ignition signal circuit is open or shorted • Lack of fuel • Drive plate or flywheel • Air fuel ratio (A/F) sensor 1 • Incorrect PCV hose connection
P0301 0301	No.1 cylinder misfire detected	No. 1 cylinder misfires.	
P0302 0302	No. 2 cylinder misfire detected	No. 2 cylinder misfires.	
P0303 0303	No. 3 cylinder misfire detected	No. 3 cylinder misfires.	
P0304 0304	No. 4 cylinder misfire detected	No. 4 cylinder misfires.	

DTC Confirmation Procedure

INFOID:0000000005285388

CAUTION:
Always drive vehicle in safe manner according to traffic conditions and obey all traffic laws when driving.
NOTE:
If DTC Confirmation Procedure has been previously conducted, always turn ignition switch OFF and wait at least 10 seconds before conducting the next test.

WITH CONSULT-III

1. Turn ignition switch ON and select “DATA MONITOR” mode with CONSULT-III.
2. Start engine and warm it up to normal operating temperature.
3. Turn ignition switch OFF and wait at least 10 seconds.
4. Restart engine and let it idle for about 15 minutes.
5. Check 1st trip DTC.
6. If 1st trip DTC is detected, go to EC-861, "Diagnosis Procedure".
   NOTE:
   If 1st trip DTC is not detected during above procedure, performing the following procedure is advised.

a. Turn ignition switch OFF and wait at least 10 seconds.
b. Start engine and drive the vehicle under the similar conditions to (1st trip) Freeze Frame Data for a certain time. Refer to table below.
Hold the accelerator pedal as steady as possible.

The similar conditions to (1st trip) Freeze Frame Data means the vehicle operation that the following condition should be satisfied at the same time:

Engine speed	Engine speed in the freeze frame data ± 400 rpm
Vehicle speed	Vehicle speed in the freeze frame data ± 10 km/h (6 MPH)
Basic fuel schedule	Basic fuel schedule in the freeze frame data × (1 ± 0.1)
Engine coolant temperature (T) condition	When the freeze frame data shows lower than 70°C (158°F), T should be lower than 70°C (158°F)
	When the freeze frame data shows higher than or equal to 70°C (158°F), T should be higher than or equal to 70°C (158°F)

The time to driving varies according to the engine speed in the freeze frame data.
Refer to the following table.

Engine speed	Time
Around 1,000 rpm	Approximately 10 minutes
Around 2,000 rpm	Approximately 5 minutes
More than 3,000 rpm	Approximately 3.5 minutes

WITH GST
Follow the procedure “WITH CONSULT-III” above.

Diagnosis Procedure

INFOID:0000000005285389

1. CHECK FOR INTAKE AIR LEAK AND PCV HOSE

1. Start engine and run it at idle speed.
2. Listen for the sound of the intake air leak.
3. Check PCV hose connection.

OK or NG

OK >> GO TO 2.
NG >> Repair or replace.

2. CHECK FOR EXHAUST SYSTEM CLOGGING

Stop engine and visually check exhaust tube, three way catalyst and muffler for dents.

OK or NG

OK >> GO TO 3.
NG >> Repair or replace.

3. PERFORM POWER BALANCE TEST

With CONSULT-III
1. Perform “POWER BALANCE” in “ACTIVE TEST” mode.
2. Is there any cylinder which does not produce a momentary engine speed drop?

Without CONSULT-III

When disconnecting each fuel injector (1) harness connector one at a time, is there any cylinder which does not produce a momentary engine speed drop?

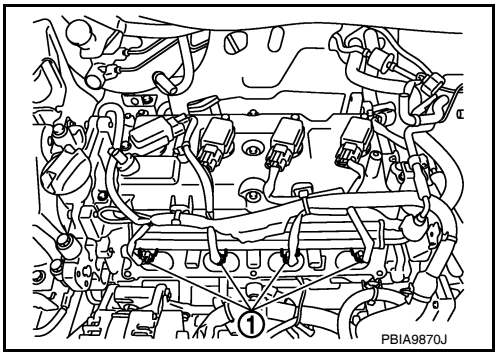

Yes or No

Yes >> GO TO 4.
No >> GO TO 9.

4. CHECK FUEL INJECTOR

Does each fuel injector make an operating sound at idle?

Yes or No

Yes >> GO TO 5.
No >> Check fuel injector(s) and circuit(s). Refer to EC-1089.

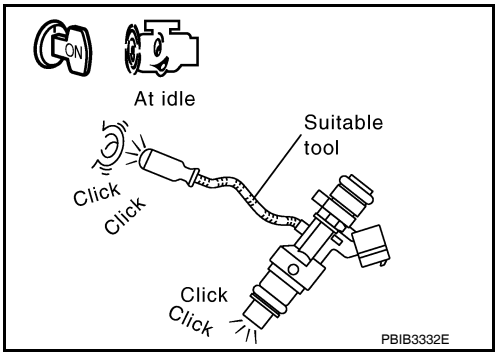

5. CHECK FUNCTION OF IGNITION COIL-I

CAUTION:

Do the following procedure in the place where ventilation is good without the combustible.

1. Turn ignition switch OFF.
2. Remove fuel pump fuse (1) in IPDM E/R (2) to release fuel pressure.
   NOTE:
   Do not use CONSULT-III to release fuel pressure, or fuel pressure applies again during the following procedure.

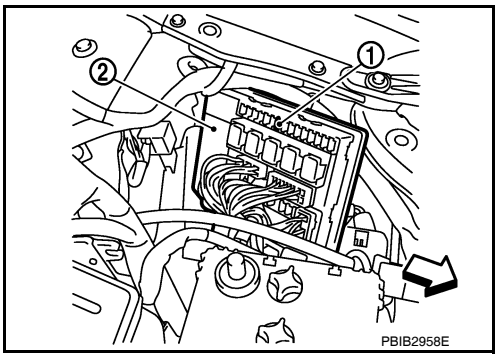

- ⇦ : Vehicle front
3. Start engine.
4. After engine stalls, crank it two or three times to release all fuel pressure.
5. Turn ignition switch OFF.
6. Remove all ignition coil harness connectors to avoid the electrical discharge from the ignition coils.
7. Remove ignition coil and spark plug of the cylinder to be checked.
8. Crank engine for 5 seconds or more to remove combustion gas in the cylinder.
9. Connect spark plug and harness connector to ignition coil.
10. Fix ignition coil using a rope etc. with gap of 13 – 17 mm (0.52 – 0.66 in) between the edge of the spark plug and grounded metal portion as shown in the figure.
11. Crank engine for about 3 seconds, and check whether spark is generated between the spark plug and the grounded metal portion.

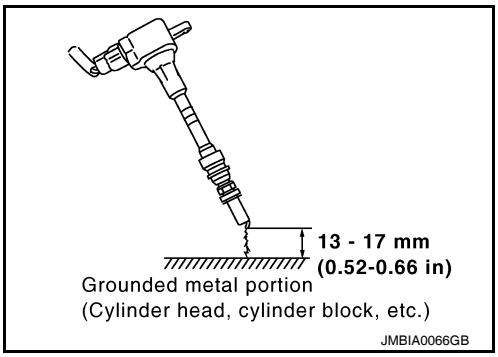

Spark should be generated.

CAUTION:

- **Do not approach to the spark plug and the ignition coil within 50 cm. Be careful not to get an electrical shock while checking, because the electrical discharge voltage becomes 20 kV or more.**
- **It might cause to damage the ignition coil if the gap of more than 17 mm (0.66 in) is taken.**

NOTE:
When the gap is less than 13 mm (0.52 in), the spark might be generated even if the coil is malfunctioning.

OK or NG

OK >> GO TO 9.
NG >> GO TO 6.

6. CHECK FUNCTION OF IGNITION COIL-II

1. Turn ignition switch OFF.
2. Disconnect spark plug and connect a known-good spark plug.
3. Crank engine for about 3 seconds, and recheck whether spark is generated between the spark plug and the grounded metal portion.

Spark should be generated.

OK or NG

OK >> GO TO 7.
NG >> Check ignition coil, power transistor and their circuits. Refer to EC-1099.

7. CHECK SPARK PLUG

Check the initial spark plug for fouling, etc.

OK or NG

OK >> Replace spark plug(s) with standard type one(s). For spark plug type, refer to MA-27, "SPARK PLUG : Removal and Installation".
NG >> 1. Repair or clean spark plug.
2. GO TO 8.

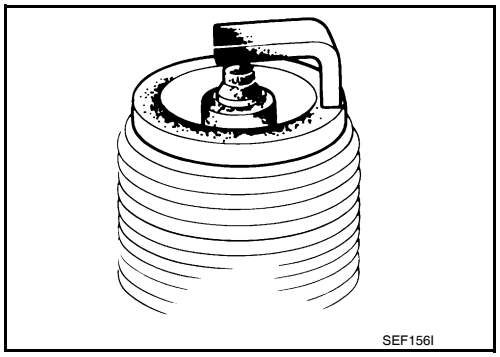

8. CHECK FUNCTION OF IGNITION COIL-III

1. Reconnect the initial spark plugs.
2. Crank engine for about three seconds, and recheck whether spark is generated between the spark plug and the grounded portion.

Spark should be generated.

OK or NG

OK >> **INSPECTION END**
NG >> Replace spark plug(s) with standard type one(s). For spark plug type, refer to MA-27, "SPARK PLUG : Removal and Installation".

9. CHECK COMPRESSION PRESSURE

Check compression pressure. Refer to EM-65, "On-Vehicle Service".

OK or NG

OK >> GO TO 10.
NG >> Check pistons, piston rings, valves, valve seats and cylinder head gaskets.

10. CHECK FUEL PRESSURE

1. Install all removed parts.
2. Release fuel pressure to zero. Refer to EC-656, "Fuel Pressure Check".
3. Install fuel pressure gauge and check fuel pressure. Refer to EC-656, "Fuel Pressure Check".

At idling: Approximately 350 kPa (3.57 kg/cm^2, 51 psi)

OK or NG

OK >> GO TO 12.
NG >> GO TO 11.

11. DETECT MALFUNCTIONING PART

Check the following.
- Fuel pump and circuit (Refer to EC-1094.)
- Fuel pressure regulator (Refer to EC-656, "Fuel Pressure Check".)
- Fuel lines (Refer to EM-36.)
- Fuel filter for clogging

>> Repair or replace.

12. CHECK IGNITION TIMING

Check the following items. Refer to EC-648, "Basic Inspection".

Items	Specifications
Target idle speed	CVT: 675 ± 50 rpm (in P or N position)
	M/T: 700 ± 50 rpm (in Neutral position)
Ignition timing	CVT: 6 ± 5° BTDC (in Neutral position)
	M/T: 6 ± 5° BTDC (in Neutral position)

OK or NG

OK >> GO TO 13.
NG >> Follow the EC-648, "Basic Inspection".

13. CHECK AIR FUEL RATIO (A/F) SENSOR 1 CIRCUIT FOR OPEN AND SHORT

1. Turn ignition switch OFF.
2. Disconnect air fuel ratio (A/F) sensor 1 harness connector (1).
- Air fuel ratio (A/F) sensor 1 (2)
3. Disconnect ECM harness connector.
4. Check harness continuity between the following terminals. Refer to Wiring Diagram.

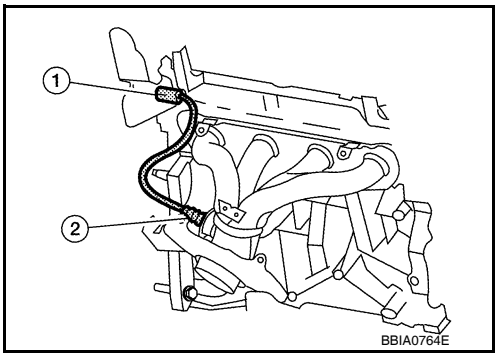

A/F sensor 1 terminal	ECM terminal
1	49
2	53

Continuity should exist.

5. Check harness continuity between ECM terminals 49, 53 or A/F sensor 1 terminals 1, 2 and ground. Refer to Wiring Diagram.

Continuity should not exist.

6. Also check harness for short to power.

OK or NG

OK >> GO TO 14.
NG >> Repair open circuit or short to ground or short to power in harness or connectors.

14. CHECK AIR FUEL RATIO (A/F) SENSOR 1 HEATER

Refer to EC-726, "Component Inspection".

OK or NG

OK >> GO TO 16.

NG >> GO TO 15.

15. REPLACE AIR FUEL RATIO (A/F) SENSOR 1

Replace air fuel ratio (A/F) sensor 1.

CAUTION:

- **Discard any A/F sensor which has been dropped from a height of more than 0.5 m (19.7 in) onto a hard surface such as a concrete floor; use a new one.**
- **Before installing new A/F sensor, clean exhaust system threads using Oxygen Sensor Thread Cleaner tool J-43897-18 or J-43897-12 and approved anti-seize lubricant.**

>> **INSPECTION END**

16. CHECK MASS AIR FLOW SENSOR

With CONSULT-III

1. Start engine and warm it up to normal operating temperature.
2. Check mass air flow sensor signal in “DATA MONITOR” mode with CONSULT-III.

At idling	**: 1.0 - 4.0 g·m/sec**
At 2,500 rpm	**: 2.0 - 10.0 g·m/sec**

With GST

1. Start engine and warm it up to normal operating temperature.
2. Check mass air flow sensor signal in Service $01 with GST.

At idling	**: 1.0 - 4.0 g·m/sec**
At 2,500 rpm	**: 2.0 - 10.0 g·m/sec**

OK or NG

OK >> GO TO 17.

NG >> Check connectors for rusted terminals or loose connections in the mass air flow sensor circuit or ground. Refer to EC-739.

17. CHECK SYMPTOM MATRIX CHART

Check items on the rough idle symptom in EC-666, "Symptom Matrix Chart".

OK or NG

OK >> GO TO 18.

NG >> Repair or replace.

18. ERASE THE 1ST TRIP DTC

Some tests may cause a 1st trip DTC to be set.

Erase the 1st trip DTC from the ECM memory after performing the tests. Refer to EC-617, "Emission-related Diagnostic Information".

>> GO TO 19.

19. CHECK INTERMITTENT INCIDENT

Refer to EC-706.

>> **INSPECTION END**

DTC P0327, P0328 KS

Component Description

INFOID:0000000005285390

The knock sensor (1) is attached to the cylinder block. It senses engine knocking using a piezoelectric element. A knocking vibration from the cylinder block is sensed as vibrational pressure. This pressure is converted into a voltage signal and sent to the ECM.

- ⇦: Vehicle front

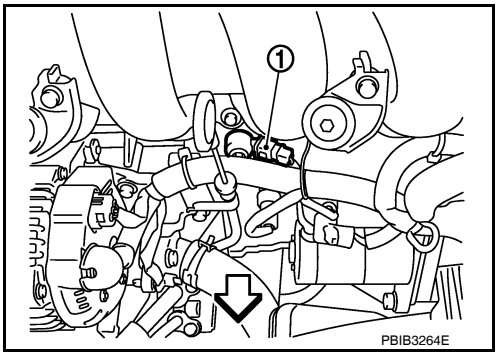

On Board Diagnosis Logic

INFOID:0000000005285391

The MIL will not light up for these self-diagnoses.

DTC No.	Trouble Diagnosis Name	DTC Detected Condition	Possible Cause
P0327 0327	Knock sensor circuit low input	An excessively low voltage from the sensor is sent to ECM.	• Harness or connectors (Knock sensor circuit is open or shorted.) • Knock sensor
P0328 0328	Knock sensor circuit high input	An excessively high voltage from the sensor is sent to ECM.	

DTC Confirmation Procedure

INFOID:0000000005285392

NOTE:
If DTC Confirmation Procedure has been previously conducted, always turn ignition switch OFF and wait at least 10 seconds before conducting the next test.

TESTING CONDITION:
Before performing the following procedure, confirm that battery voltage is more than 10 V at idle.

1. Start engine and run it for at least 5 seconds at idle speed.
2. Check 1st trip DTC.
3. If 1st trip DTC is detected, go to EC-868, "Diagnosis Procedure".

Wiring Diagram

INFOID:0000000005285393

EC-KS-01

: DETECTABLE LINE FOR DTC
: NON-DETECTABLE LINE FOR DTC

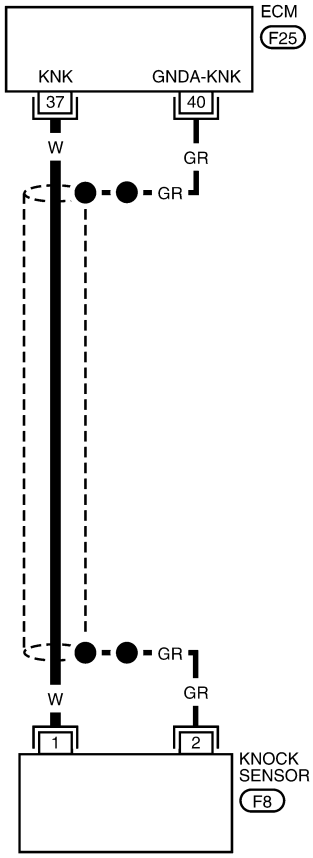

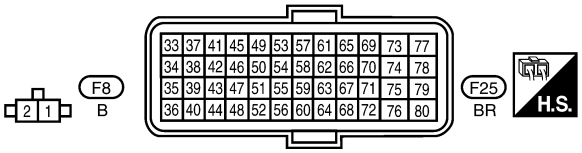

ABBWA0164GB

Specification data are reference values and are measured between each terminal and ground.

CAUTION:

Do not use ECM ground terminals when measuring input/output voltage. Doing so may result in damage to the ECM's transistor. Use a ground other than ECM terminals, such as the ground.

TERMINAL NO.	WIRE COLOR	ITEM	CONDITION	DATA (DC Voltage)
37	W	Knock sensor	**[Engine is running]** • Idle speed	Approximately 2.5 V
40	GR	Sensor ground (Knock sensor)	**[Engine is running]** • **Warm-up condition** • Idle speed	Approximately 0 V

Diagnosis Procedure

INFOID:0000000005285394

1. CHECK KNOCK SENSOR INPUT SIGNAL CIRCUIT-I

1. Turn ignition switch OFF.
2. Disconnect ECM harness connector.
3. Check resistance between ECM terminal 37 and ground. Refer to Wiring Diagram.
   NOTE:
   It is necessary to use an ohmmeter which can measure more than 10 MΩ.

   Resistance: Approximately 532 - 588 kΩ [at 20°C (68°F)]

4. Also check harness for short to ground and short to power.

OK or NG

OK >> GO TO 4.
NG >> GO TO 2.

2. CHECK KNOCK SENSOR INPUT SIGNAL CIRCUIT-II

1. Disconnect knock sensor (1) harness connector.
- ⇦: Vehicle front
2. Check harness continuity between ECM terminal 37 and knock sensor terminal 1. Refer to Wiring Diagram.

   Continuity should exist.

3. Also check harness for short to ground and short to power.

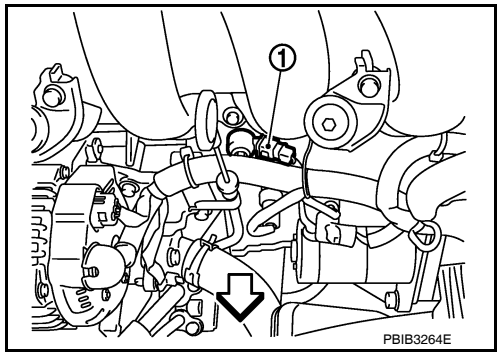

OK or NG

OK >> GO TO 3.
NG >> Repair open circuit or short to ground or short to power in harness or connectors.

3. CHECK KNOCK SENSOR

Refer to EC-869, "Component Inspection".

OK or NG

OK >> GO TO 6.
NG >> Replace knock sensor.

4. CHECK GROUND CONNECTIONS

Loosen and retighten ground screws on the body.
Refer to EC-711, "Ground Inspection".

- ⇦: Vehicle front
- Body ground (1)

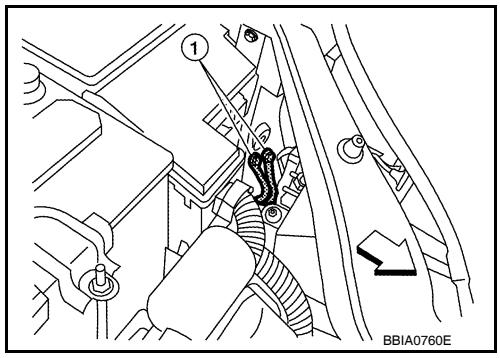

OK or NG

OK >> GO TO 5.
NG >> Repair or replace ground connections.

5. CHECK KNOCK SENSOR SHIELD CIRCUIT FOR OPEN AND SHORT

1. Reconnect knock sensor harness connector.
2. Check harness continuity between ECM terminal 40 and knock sensor terminal 2.
   Refer to Wiring Diagram.

   Continuity should exist

3. Also check harness for short to ground and short to power.

OK or NG

OK >> GO TO 6.
NG >> Repair open circuit or short to ground or short to power in harness or connectors.

6. CHECK INTERMITTENT INCIDENT

Refer to EC-706.

>> **INSPECTION END**

Component Inspection

INFOID:0000000005285395

KNOCK SENSOR

1. Check resistance between knock sensor terminal 1 and ground.
   NOTE:
   It is necessary to use an ohmmeter which can measure more than 10 MΩ.

   Resistance: Approximately 532 - 588 kΩ [at 20°C (68°F)]

   CAUTION:
   Do not use any knock sensors that have been dropped or physically damaged. Use only new ones.
2. If NG, replace knock sensor.

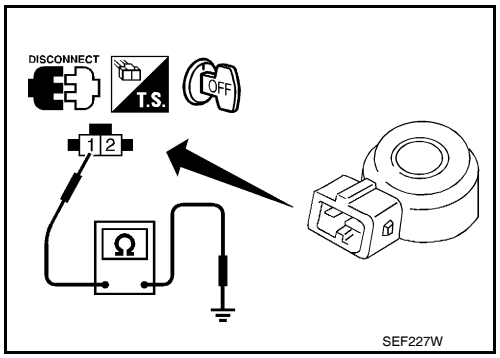

Removal and Installation

INFOID:0000000005285396

KNOCK SENSOR

Refer to EM-80.

DTC P0335 CKP SENSOR (POS)

Component Description

INFOID:0000000005285397

The crankshaft position sensor (POS) is located on the cylinder block rear housing facing the gear teeth (cogs) of the signal plate at the end of the crankshaft. It detects the fluctuation of the engine revolution. The sensor consists of a permanent magnet and Hall IC.
When the engine is running, the high and low parts of the teeth cause the gap with the sensor to change. The changing gap causes the magnetic field near the sensor to change. Due to the changing magnetic field, the voltage from the sensor changes. The ECM receives the voltage signal and detects the fluctuation of the engine revolution.
ECM receives the signals as shown in the figure.

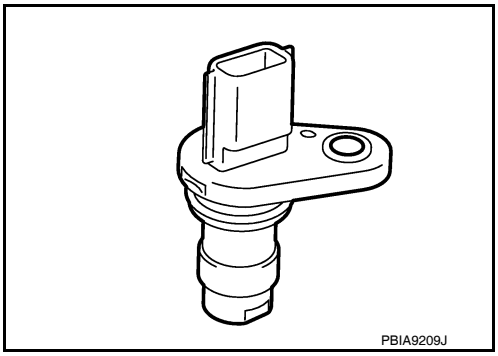

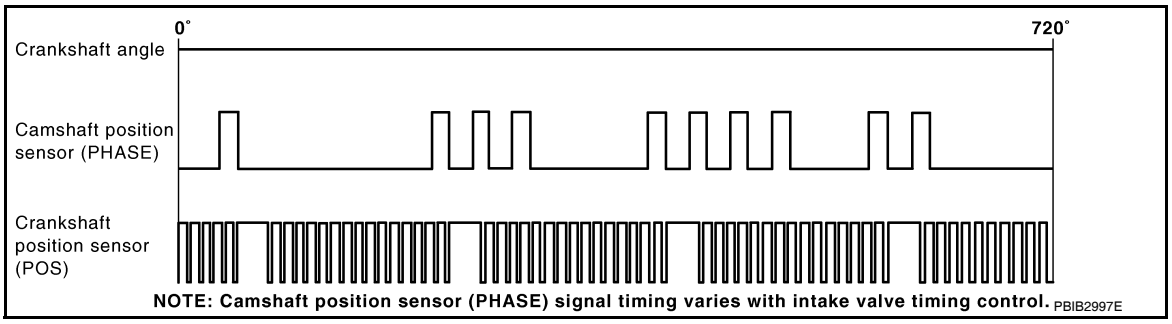

CONSULT-III Reference Value in Data Monitor Mode

INFOID:0000000005285398

Specification data are reference values.

Monitor item	Condition	Specification
ENG SPEED	• Run engine and compare CONSULT-III value with the tachometer indication.	Almost the same speed as the tachometer indication.

On Board Diagnosis Logic

INFOID:0000000005285399

DTC No.	Trouble diagnosis name	DTC detecting condition	Possible cause
P0335 0335	Crankshaft position sensor (POS) circuit	• The crankshaft position sensor (POS) signal is not detected by the ECM during the first few seconds of engine cranking. • The proper pulse signal from the crankshaft position sensor (POS) is not sent to ECM while the engine is running. • The crankshaft position sensor (POS) signal is not in the normal pattern during engine running.	• Harness or connectors [Crankshaft position sensor (POS) circuit is open or shorted.] (Accelerator pedal position sensor circuit is shorted.) (Refrigerant pressure sensor circuit is shorted.) (EVAP control system pressure sensor circuit is sorted.) • Crankshaft position sensor (POS) • Accelerator pedal position sensor • Refrigerant pressure sensor • EVAP control system pressure sensor • Signal plate

DTC Confirmation Procedure

INFOID:0000000005285400

NOTE:
If DTC Confirmation Procedure has been previously conducted, always turn ignition switch OFF and wait at least 10 seconds before conducting the next test.
TESTING CONDITION:

Before performing the following procedure, confirm that battery voltage is more than 10.5 V with ignition switch ON.

1. Crank engine for at least 2 seconds and run it for at least 5 seconds at idle speed.
2. Check 1st trip DTC.
3. If 1st trip DTC is detected, go to EC-872, "Diagnosis Procedure".

Wiring Diagram

INFOID:0000000005285401

EC-POS-01

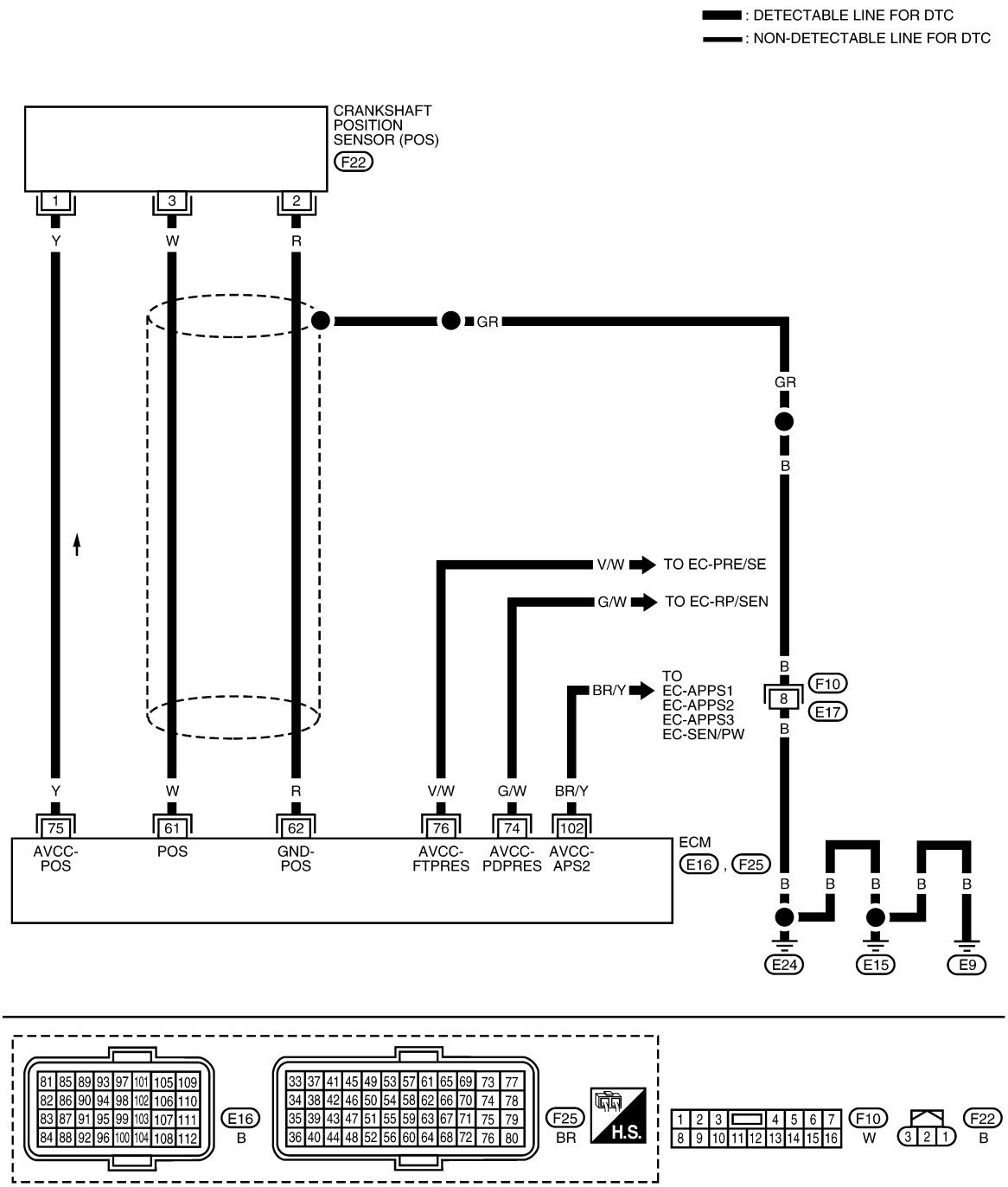

ABBWA0165GB

Specification data are reference values and are measured between each terminal and ground.
Pulse signal is measured by CONSULT-III.

CAUTION:

Do not use ECM ground terminals when measuring input/output voltage. Doing so may result in damage to the ECM's transistor. Use a ground other than ECM terminals, such as the ground.

TERMINAL NO.	WIRE COLOR	ITEM	CONDITION	DATA (DC Voltage)
61	W	Crankshaft position sensor (POS)	**[Engine is running]** • **Warm-up condition** • Idle speed **NOTE:** The pulse cycle changes depending on rpm at idle.	Approximately 4.0 V★ 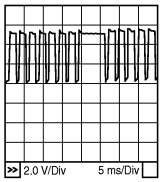 PBIB2998E
			[Engine is running] • Engine speed: 2,000 rpm	Approximately 4.0 V★ 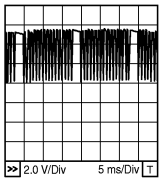 PBIB2999E
62	R	Sensor ground [Crankshaft position sensor (POS)]	**[Engine is running]** • **Warm-up condition** • Idle speed	Approximately 0 V
74	G/W	Sensor power supply (Refrigerant pressure sensor)	**[Ignition switch: ON]**	Approximately 5 V
75	Y	Sensor power supply [Crankshaft position sensor (POS)]	**[Ignition switch: ON]**	Approximately 5 V
76	V/W	EVAP control system pressure sensor power supply	**[Ignition switch: ON]**	Approximately 5 V
102	BR/Y	Sensor power supply (APP sensor 2)	**[Ignition switch: ON]**	Approximately 5 V

★: Average voltage for pulse signal (Actual pulse signal can be confirmed by oscilloscope.)

Diagnosis Procedure

INFOID:0000000005285402

1. CHECK GROUND CONNECTIONS

1. Turn ignition switch OFF.
2. Loosen and retighten ground screws on the body.
   Refer to EC-711, "Ground Inspection".

- ⇦ : Vehicle front
- Body ground (1)

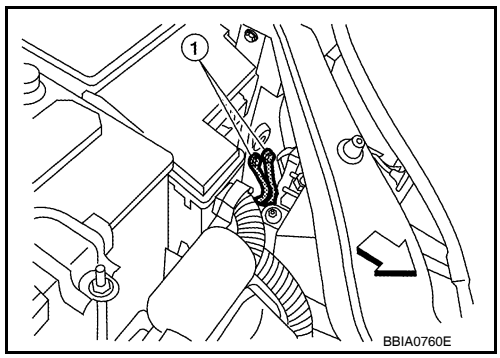

OK or NG

OK >> GO TO 2.
NG >> Repair or replace ground connections.

2. CHECK CRANKSHAFT POSITION (CKP) SENSOR (POS) POWER SUPPLY CIRCUIT-I

1. Disconnect crankshaft position (CKP) sensor (POS) (1) harness connector.
2. Turn ignition switch ON.

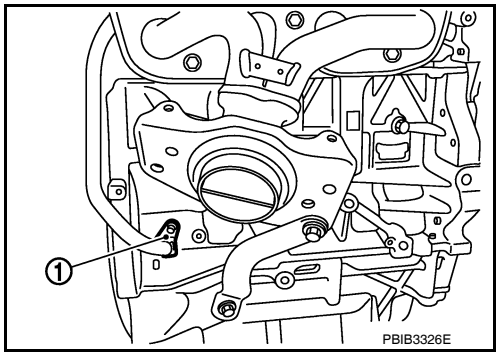

3. Check voltage between CKP sensor (POS) terminal 1 and ground with CONSULT-III or tester.

Voltage: Approximately 5 V

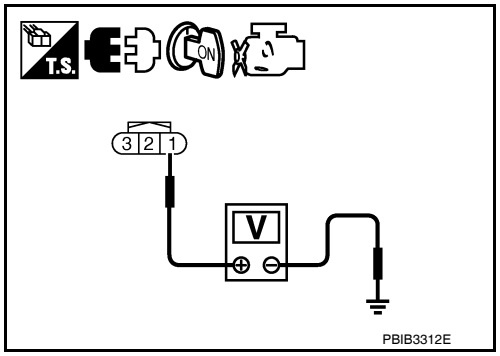

OK or NG

OK >> GO TO 9.
NG >> GO TO 3.

3. CHECK CKP SENSOR (POS) POWER SUPPLY CIRCUIT-II

1. Turn ignition switch OFF.
2. Disconnect ECM harness connector.
3. Check harness continuity between CKP sensor (POS) terminal 1 and ECM terminal 75. Refer to Wiring Diagram.

Continuity should exist.

OK or NG

OK >> GO TO 4.
NG >> Repair open circuit.

4. CHECK POWER SUPPLY CIRCUITS

Check harness for short to power and short to ground, between the following terminals.

ECM terminal	Sensor terminal	Reference Wiring Diagram
74	Refrigerant pressure sensor terminal 3	EC-1109, "Wiring Diagram"
75	Crankshaft position sensor (POS) terminal 1	EC-871, "Wiring Diagram"
76	EVAP control system pressure sensor terminal3	EC-930, "Wiring Diagram"
102	APP sensor terminal 5	EC-1052, "Wiring Diagram"

OK or NG

OK >> GO TO 5.
NG >> Repair short to ground or short to power in harness or connectors.

5. CHECK REFRIGERANT PRESSURE SENSOR

Refer to MTC-27.

OK or NG

OK >> GO TO 6.
NG >> Replace refrigerant pressure sensor.

6. CHECK EVAP CONTROL SYSTEM PRESSURE SENSOR

Refer to EC-934, "Component Inspection".

OK or NG

OK >> GO TO 7.
NG >> Replace EVAP control system pressure sensor.

7. CHECK APP SENSOR

Refer to EC-1055, "Component Inspection".

OK or NG

OK >> GO TO 13.
NG >> GO TO 8.

8. REPLACE ACCELERATOR PEDAL ASSEMBLY

1. Replace accelerator pedal assembly.
2. Perform EC-654, "Accelerator Pedal Released Position Learning".
3. Perform EC-654, "Throttle Valve Closed Position Learning".
4. Perform EC-654, "Idle Air Volume Learning".

>> **INSPECTION END**

9. CHECK CKP SENSOR (POS) GROUND CIRCUIT FOR OPEN AND SHORT

1. Turn ignition switch OFF.
2. Disconnect ECM harness connector.
3. Check harness continuity between CKP sensor (POS) terminal 2 and ECM terminal 62.
   Refer to Wiring Diagram.

Continuity should exist.

4. Also check harness for short to ground and short to power.

OK or NG

OK >> GO TO 10.
NG >> Repair open circuit or short to ground or short to power in harness or connectors.

10. CHECK CKP SENSOR (POS) INPUT SIGNAL CIRCUIT FOR OPEN AND SHORT

1. Check harness continuity between CKP sensor (POS) terminal 3 and ECM terminal 61.
   Refer to Wiring Diagram.

Continuity should exist.

2. Also check harness for short to ground and short to power.

OK or NG

OK >> GO TO 11.
NG >> Repair open circuit or short to ground or short to power in harness or connectors.

11. CHECK CRANKSHAFT POSITION SENSOR (POS)

Refer to EC-875, "Component Inspection".

OK or NG

OK >> GO TO 12.
NG >> Replace crankshaft position sensor (POS).

12. CHECK GEAR TOOTH

Visually check for chipping signal plate gear tooth.

OK or NG

OK >> GO TO 13.
NG >> Replace the signal plate.

13. CHECK INTERMITTENT INCIDENT

Refer to EC-706.

>> **INSPECTION END**

Component Inspection

INFOID:0000000005285403

CRANKSHAFT POSITION SENSOR (POS)

1. Loosen the fixing bolt of the sensor.
2. Disconnect crankshaft position sensor (POS) harness connector.
3. Remove the sensor.
4. Visually check the sensor for chipping.

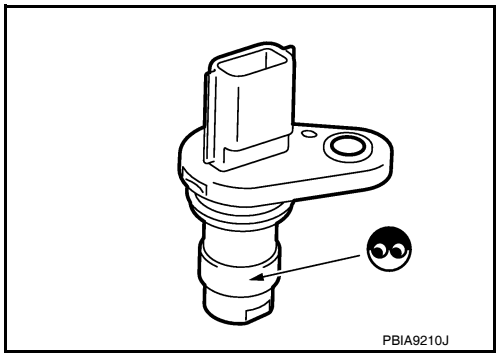

5. Check resistance as shown in the figure.

Terminal No. (Polarity)	Resistance [at 25°C (77°F)]
1 (+) - 2 (-)	Except 0 or ∞ Ω
1 (+) - 3 (-)	
2 (+) - 3 (-)	

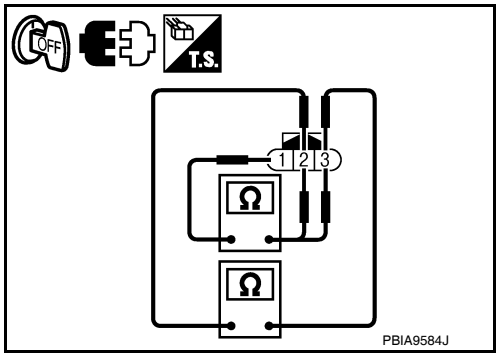

6. If NG, replace crankshaft position sensor (POS).

Removal and Installation

INFOID:0000000005285404

CRANKSHAFT POSITION SENSOR (POS)

Refer to EM-80.

DTC P0340 CMP SENSOR (PHASE)

Component Description

INFOID:0000000005285405

The camshaft position sensor (PHASE) senses the protrusion of camshaft (INT) to identify a particular cylinder. The camshaft position sensor (PHASE) senses the piston position. When the crankshaft position sensor (POS) system becomes inoperative, the camshaft position sensor (PHASE) provides various controls of engine parts instead, utilizing timing of cylinder identification signals. The sensor consists of a permanent magnet and Hall IC. When engine is running, the high and low parts of the teeth cause the gap with the sensor to change. The changing gap causes the magnetic field near the sensor to change. Due to the changing magnetic field, the voltage from the sensor changes.
ECM receives the signals as shown in the figure.

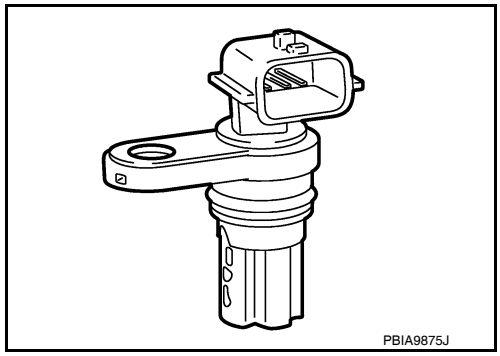

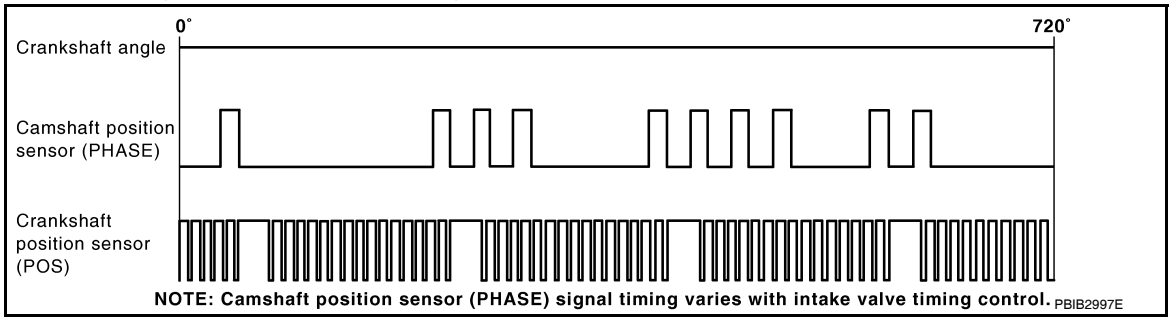

CONSULT-III Reference Value in Data Monitor Mode

INFOID:0000000005285406

Specification data are reference values.

Monitor item	Condition	Specification
ENG SPEED	• Run engine and compare CONSULT-III value with the tachometer indication.	Almost the same speed as the tachometer indication.

On Board Diagnosis Logic

INFOID:0000000005285407

NOTE:
If DTC P0340 is displayed with DTC P0643, first perform the trouble diagnosis for DTC P0643. Refer to EC-976.

DTC No.	Trouble diagnosis name	DTC detecting condition	Possible cause
P0340 0340	Camshaft position sensor (PHASE) circuit	• The cylinder No. signal is not sent to ECM for the first few seconds during engine cranking. • The cylinder No. signal is not set to ECM during engine running. • The cylinder No. signal is not in the normal pattern during engine running.	• Harness or connectors [Camshaft position sensor (PHASE) circuit is open or shorted.] • Camshaft position sensor (PHASE) • Camshaft (INT) • Starter motor (Refer to SC-11.) • Starting system circuit (Refer to SC-11.) • Dead (Weak) battery

DTC Confirmation Procedure

INFOID:0000000005285408

NOTE:
If DTC Confirmation Procedure has been previously conducted, always turn ignition switch OFF and wait at least 10 seconds before conducting the next test.
TESTING CONDITION:
Before performing the following procedure, confirm that battery voltage is more than 10.5 V with ignition switch ON.

1. Crank engine for at least 2 seconds and run it for at least 5 seconds at idle speed.

2. Check 1st trip DTC.
3. If 1st trip DTC is detected, go to EC-878, "Diagnosis Procedure".
   If 1st trip DTC is not detected, go to next step.
4. Maintain engine speed at more than 800 rpm for at least 5 seconds.
5. Check 1st trip DTC.
6. If 1st trip DTC is detected, go to EC-878, "Diagnosis Procedure".

Wiring Diagram

INFOID:0000000005285409

EC-PHASE-01

: DETECTABLE LINE FOR DTC
: NON-DETECTABLE LINE FOR DTC

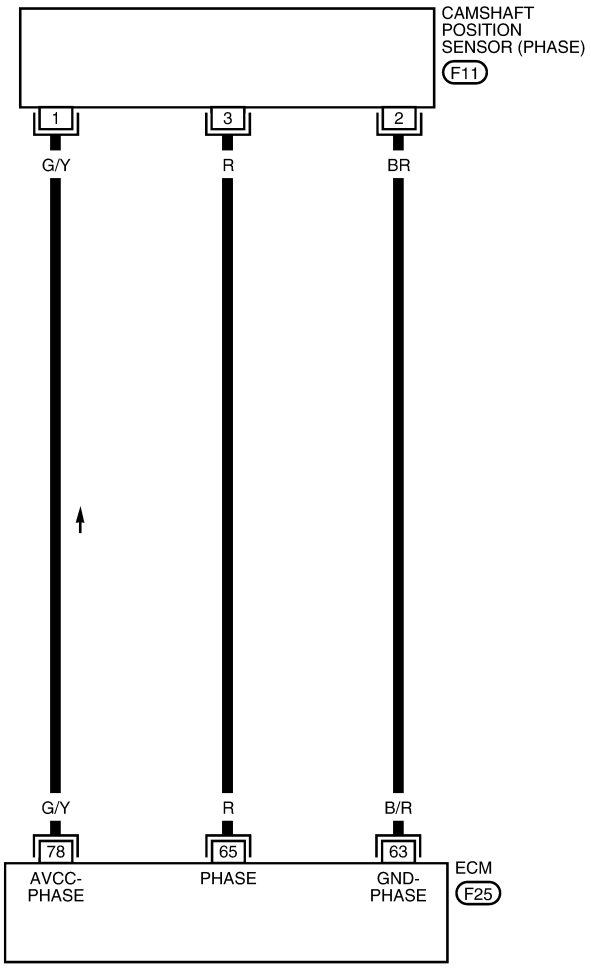

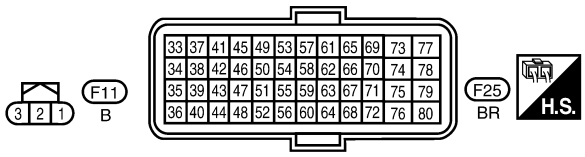

BBWA2885E

Specification data are reference values and are measured between each terminal and ground.
Pulse signal is measured by CONSULT-III.

CAUTION:

Do not use ECM ground terminals when measuring input/output voltage. Doing so may result in damage to the ECM's transistor. Use a ground other than ECM terminals, such as the ground.

TERMINAL NO.	WIRE COLOR	ITEM	CONDITION	DATA (DC Voltage)
63	B/R	Sensor ground [Camshaft position sensor (PHASE)]	**[Engine is running]** • **Warm-up condition** • Idle speed	Approximately 0 V
65	R	Camshaft position sensor (PHASE)	**[Engine is running]** • **Warm-up condition** • Idle speed **NOTE:** The pulse cycle changes depending on rpm at idle.	1.0 - 2.0 V★ 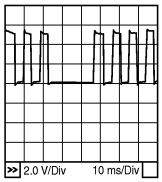 PBIB2986E
			[Engine is running] • Engine speed: 2,000 rpm.	1.0 - 2.0 V★ 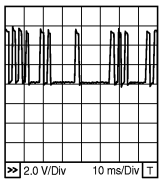 PBIB2987E
78	G/Y	Sensor power supply [Camshaft position sensor (PHASE)]	**[Ignition switch: ON]**	Approximately 5 V

★: Average voltage for pulse signal (Actual pulse signal can be confirmed by oscilloscope.)

Diagnosis Procedure

INFOID:0000000005285410

1. CHECK STARTING SYSTEM

Turn ignition switch to START position.

Does the engine turn over?

Does the starter motor operate?

Yes or No

Yes >> GO TO 2.
No >> Check starting system. (Refer to SC-11.)

2. CHECK GROUND CONNECTIONS

1. Turn ignition switch OFF.

2. Loosen and retighten ground screws on the body.
   Refer to EC-711, "Ground Inspection".
- ⇦ : Vehicle front
- Body ground (1)

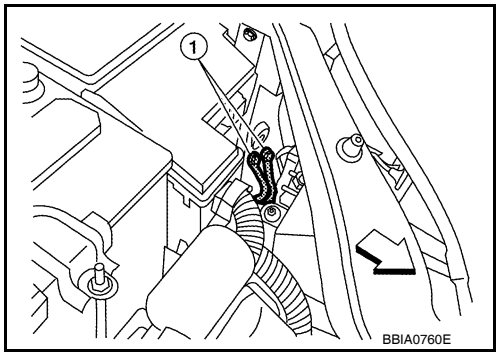

OK or NG

OK >> GO TO 3.
NG >> Repair or replace ground connections.

3. CHECK CAMSHAFT POSITION (CMP) SENSOR (PHASE) POWER SUPPLY CIRCUIT

1. Disconnect camshaft position (CMP) sensor (PHASE) (1) harness connector.
- ⇦: Vehicle front
2. Turn ignition switch ON.

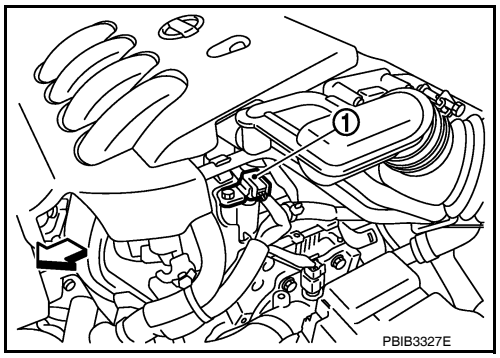

3. Check voltage between CMP sensor (PHASE) terminal 1 and ground with CONSULT-III or tester.

Voltage: Approximately 5 V

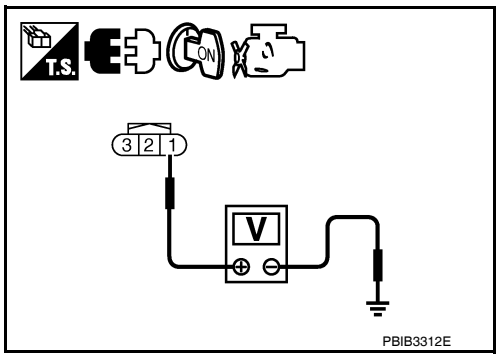

OK or NG

OK >> GO TO 4.
NG >> Repair open circuit or short to ground or short to power in harness or connectors.

4. CHECK CMP SENSOR (PHASE) GROUND CIRCUIT FOR OPEN AND SHORT

1. Turn ignition switch OFF.
2. Disconnect ECM harness connector.
3. Check harness continuity between CMP sensor (PHASE) terminal 2 and ECM terminal 63.
   Refer to Wiring Diagram.

Continuity should exist.

4. Also check harness for short to ground and short to power.

OK or NG

OK >> GO TO 5.
NG >> Repair open circuit or short to ground or short to power in harness or connectors.

5. CHECK CMP SENSOR (PHASE) INPUT SIGNAL CIRCUIT FOR OPEN AND SHORT

1. Check harness continuity between CMP sensor (PHASE) terminal 3 and ECM terminal 65.
   Refer to Wiring Diagram.

Continuity should exist.

2. Also check harness for short to ground and short to power.

OK or NG

OK >> GO TO 6.

NG >> Repair open circuit or short to ground or short to power in harness or connectors.

6. CHECK CAMSHAFT POSITION SENSOR (PHASE)

Refer to EC-880, "Component Inspection".

OK or NG

OK >> GO TO 7.
NG >> Replace camshaft position sensor (PHASE).

7. CHECK CAMSHAFT (INTAKE)

Check the following.
- Accumulation of debris to the signal plate of camshaft (1) rear end
- Chipping signal plate of camshaft rear end

OK or NG

OK >> GO TO 8.
NG >> Remove debris and clean the signal plate of camshaft rear end or replace camshaft.

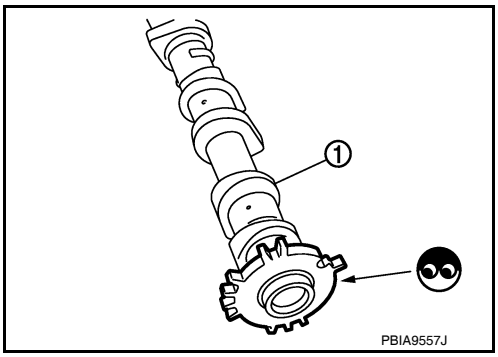

8. CHECK INTERMITTENT INCIDENT

Refer to EC-706.

>> **INSPECTION END**

Component Inspection

INFOID:0000000005285411

CAMSHAFT POSITION SENSOR (PHASE)

1. Loosen the fixing bolt of the sensor.
2. Disconnect camshaft position sensor (PHASE) harness connector.
3. Remove the sensor.
4. Visually check the sensor for chipping.

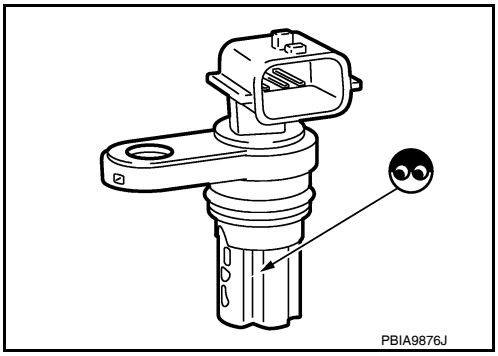

5. Check resistance as shown in the figure.

Terminal No. (Polarity)	Resistance [at 25°C (77°F)]
1 (+) - 2 (-)	Except 0 or ∞ Ω
1 (+) - 3 (-)	
2 (+) - 3 (-)	

6. If NG, replace camshaft position sensor (PHASE).

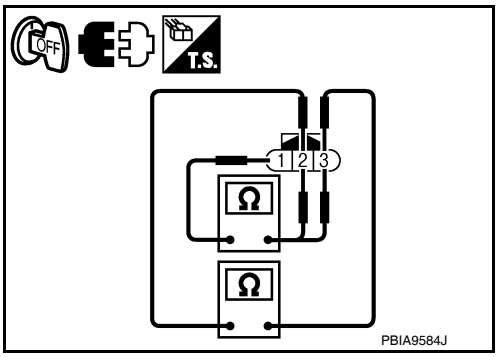

Removal and Installation

INFOID:0000000005285412

CAMSHAFT POSITION SENSOR (PHASE)

Refer to EM-50.

DTC P0420 THREE WAY CATALYST FUNCTION

On Board Diagnosis Logic

INFOID:0000000005285413

The ECM monitors the switching frequency ratio of air fuel ratio (A/F) sensor 1 and heated oxygen sensor 2.
A three way catalyst (manifold) with high oxygen storage capacity will indicate a low switching frequency of heated oxygen sensor 2. As oxygen storage capacity decreases, the heated oxygen sensor 2 switching frequency will increase.
When the frequency ratio of air fuel ratio (A/F) sensor 1 and heated oxygen sensor 2 approaches a specified limit value, the three way catalyst (manifold) malfunction is diagnosed.

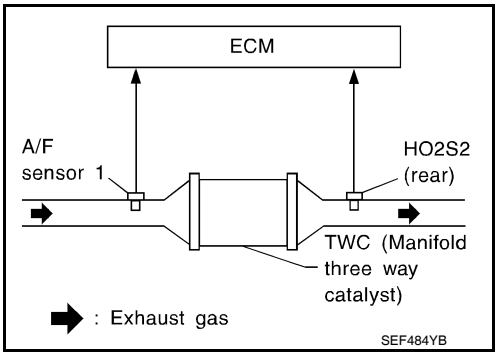

DTC No.	Trouble diagnosis name	DTC detecting condition	Possible cause
P0420 0420	Catalyst system efficiency below threshold	• Three way catalyst (manifold) does not operate properly. • Three way catalyst (manifold) does not have enough oxygen storage capacity.	• Three way catalyst (manifold) • Exhaust tube • Intake air leaks • Fuel injector • Fuel injector leaks • Spark plug • Improper ignition timing

DTC Confirmation Procedure

INFOID:0000000005285414

NOTE:
If DTC Confirmation Procedure has been previously conducted, always turn ignition switch OFF and wait at least 10 seconds before conducting the next test.

WITH CONSULT-III

TESTING CONDITION:
Do not hold engine speed for more than the specified minutes below.

1. Turn ignition switch ON and select “DATA MONITOR” mode with CONSULT-III.
2. Start engine and warm it up to the normal operating temperature.
3. Turn ignition switch OFF and wait at least 10 seconds.
4. Start engine and keep the engine speed between 3,500 and 4,000 rpm for at least 1 minute under no load.
5. Let engine idle for 1 minute.
6. Make sure that “COOLAN TEMP/S” indicates more than 70°C (158°F).
   If not, warm up engine and go to next step when “COOLAN TEMP/S” indication reaches to 70°C (158°F).
7. Open engine hood.
8. Select “DTC & SRT CONFIRMATION” then “SRT WORK SUPPORT” mode with CONSULT-III.
9. Rev engine up to 2,000 to 3,000 rpm and hold it for 3 consecutive minutes then release the accelerator pedal completely.
   If “INCMP” of “CATALYST” changed to “CMPLT”, go to step 12.
10. Wait 5 seconds at idle.
11. Rev engine up to 2,000 to 3,000 rpm and maintain it until “INCMP” of “CATALYST” changes to “CMPLT” (It will take approximately 5 minutes).
    If not “CMPLT”, stop engine and cool it down to less than 70°C (158°F) and then retest from step 1.
12. Select “SELF-DIAG RESULTS” mode with CONSULT-III.
13. Confirm that 1st trip DTC is not detected.
    If 1st trip DTC is detected, go to EC-883, "Diagnosis Procedure".

Overall Function Check

INFOID:0000000005285415

Use this procedure to check the overall function of the three way catalyst (manifold). During this check, a 1st trip DTC might not be confirmed.

WITH GST

1. Start engine and warm it up to the normal operating temperature.
2. Turn ignition switch OFF and wait at least 10 seconds.
3. Start engine and keep the engine speed between 3,500 and 4,000 rpm for at least 1 minute under no load.
4. Let engine idle for 1 minute.
5. Open engine hood.
6. Set voltmeter probe between ECM terminals 50 HO2S2 signal and ground.
7. Keep engine speed at 2,500 rpm constant under no load.
8. Make sure that the voltage does not vary for more than 5 seconds.
   If the voltage fluctuation cycle takes less than 5 seconds, go to EC-883, "Diagnosis Procedure".
   - 1 cycle: 0.6 - 1.0 → 0 - 0.3 → 0.6 - 1.0

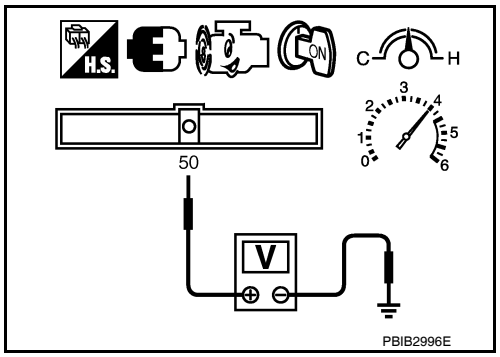

Diagnosis Procedure

INFOID:0000000005285416

1. CHECK EXHAUST SYSTEM

Visually check exhaust tubes and muffler for dent.

OK or NG

OK >> GO TO 2.
NG >> Repair or replace.

2. CHECK EXHAUST GAS LEAK

1. Start engine and run it at idle.
2. Listen for an exhaust gas leak before the three way catalyst (manifold).

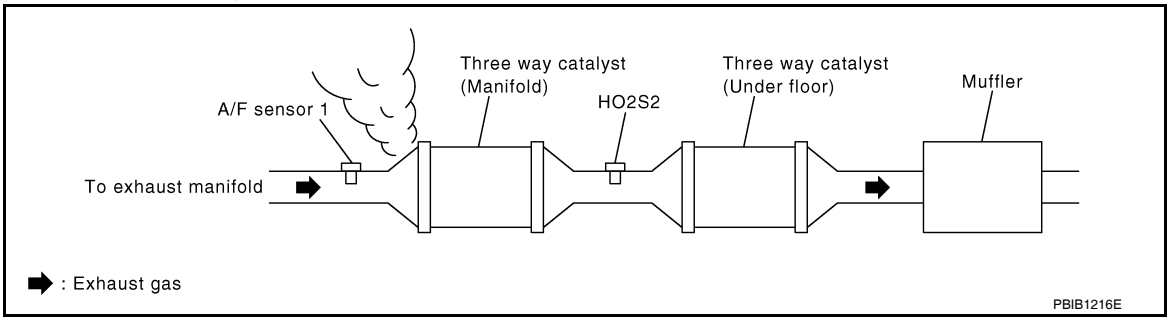

OK or NG

OK >> GO TO 3.
NG >> Repair or replace.

3. CHECK INTAKE AIR LEAK

Listen for an intake air leak after the mass air flow sensor.

OK or NG

OK >> GO TO 4.
NG >> Repair or replace.

4. CHECK IGNITION TIMING

Check the following items. Refer to EC-648, "Basic Inspection".

Items	Specifications
Target idle speed	CVT: 675 ± 50 rpm (in P or N position)
	M/T: 700 ± 50 rpm (in Neutral position)
Ignition timing	CVT: 6 ± 5° BTDC (in P or N position)
	M/T: 6 ± 5° BTDC (in Neutral position)

OK or NG

OK >> GO TO 5.
NG >> Follow the EC-648, "Basic Inspection".

5. CHECK FUEL INJECTORS

1. Stop engine and turn ignition switch OFF.
2. Disconnect ECM harness connector.
3. Turn ignition switch ON.
4. Check voltage between ECM terminals 25, 29, 30, 31 and ground with CONSULT-III or tester. Refer to Wiring Diagram for fuel injectors, EC-1090, "Wiring Diagram".

Voltage: Battery voltage

OK or NG

OK >> GO TO 6.
NG >> Perform EC-1091, "Diagnosis Procedure".

6. CHECK FUNCTION OF IGNITION COIL-I

CAUTION:
Do the following procedure in the place where ventilation is good without the combustible.

1. Turn ignition switch OFF.
2. Remove fuel pump fuse (1) in IPDM E/R (2) to release fuel pressure.
   NOTE:
   Do not use CONSULT-III to release fuel pressure, or fuel pressure applies again during the following procedure.

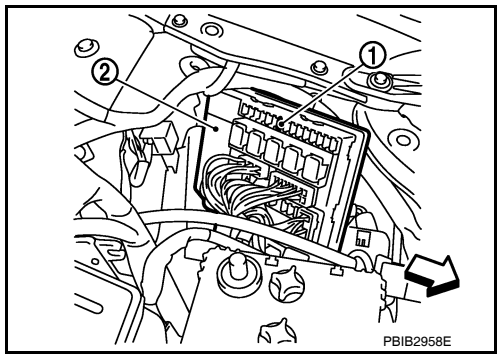

- ⇦ : Vehicle front
3. Start engine.
4. After engine stalls, crank it two or three times to release all fuel pressure.
5. Turn ignition switch OFF.
6. Remove all ignition coil harness connectors to avoid the electrical discharge from the ignition coils.
7. Remove ignition coil and spark plug of the cylinder to be checked.
8. Crank engine for 5 seconds or more to remove combustion gas in the cylinder.
9. Connect spark plug and harness connector to ignition coil.
10. Fix ignition coil using a rope etc. with gap of 13 – 17 mm (0.52 – 0.66 in) between the edge of the spark plug and grounded metal portion as shown in the figure.
11. Crank engine for about 3 seconds, and check whether spark is generated between the spark plug and the grounded metal portion.

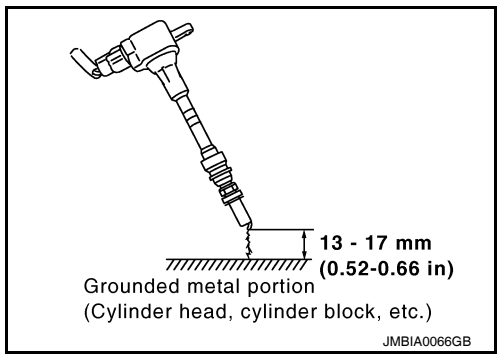

Spark should be generated.

CAUTION:
- **Do not approach to the spark plug and the ignition coil within 50cm. Be careful not to get an electrical shock while checking, because the electrical discharge voltage becomes 20kV or more.**
- **It might cause to damage the ignition coil if the gap of more than 17 mm (0.66 in) is taken.**

NOTE:

When the gap is less than 13 mm (0.52 in), the spark might be generated even if the coil is malfunctioning.

OK or NG

OK >> GO TO 10.
NG >> GO TO 7.

7. CHECK FUNCTION OF IGNITION COIL-II

1. Turn ignition switch OFF.
2. Disconnect spark plug and connect a known-good spark plug.
3. Crank engine for about 3 seconds, and recheck whether spark is generated between the spark plug and the grounded metal portion.

Spark should be generated.

OK or NG

OK >> GO TO 8.
NG >> Check ignition coil, power transistor and their circuits. Refer to EC-1099.

8. CHECK SPARK PLUG

Check the initial spark plug for fouling, etc.

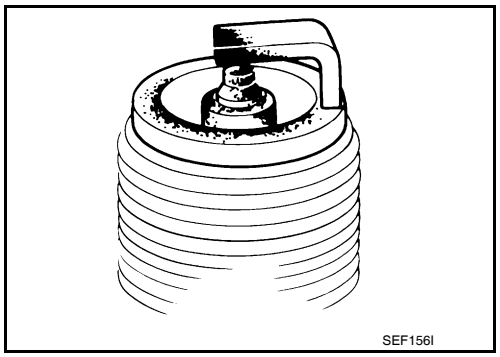

OK or NG

OK >> Replace spark plug(s) with standard type one(s). For spark plug type, refer to MA-27, "SPARK PLUG : Removal and Installation".
NG >> 1. Repair or clean spark plug.
2. GO TO 9.

9. CHECK FUNCTION OF IGNITION COIL-III

1. Reconnect the initial spark plugs.
2. Crank engine for about 3 seconds, and recheck whether spark is generated between the spark plug and the grounded portion.

Spark should be generated.

OK or NG

OK >> **INSPECTION END**
NG >> Replace spark plug(s) with standard type one(s). For spark plug type, refer to MA-27, "SPARK PLUG : Removal and Installation".

10. CHECK FUEL INJECTOR

1. Turn ignition switch OFF.
2. Remove fuel injector assembly.
   Refer to EM-36.
   Keep fuel hose and all fuel injectors connected to fuel tube.
3. Disconnect all ignition coil harness connectors.
4. Reconnect all fuel injector harness connectors disconnected.
5. Turn ignition switch ON.
   Make sure fuel does not drip from fuel injector.

OK or NG

OK (Does not drip.)>>GO TO 11.
NG (Drips.)>>Replace the fuel injector(s) from which fuel is dripping.

11. CHECK INTERMITTENT INCIDENT

Refer to EC-706.

Trouble is fixed.>>**INSPECTION END**
Trouble is not fixed.>>Replace three way catalyst (manifold).

DTC P0441 EVAP CONTROL SYSTEM

System Description

INFOID:0000000005285417

NOTE:
If DTC P0441 is displayed with other DTC such as P2122, P2123 P2127, P2128, P2138, first perform trouble diagnosis for other DTC.

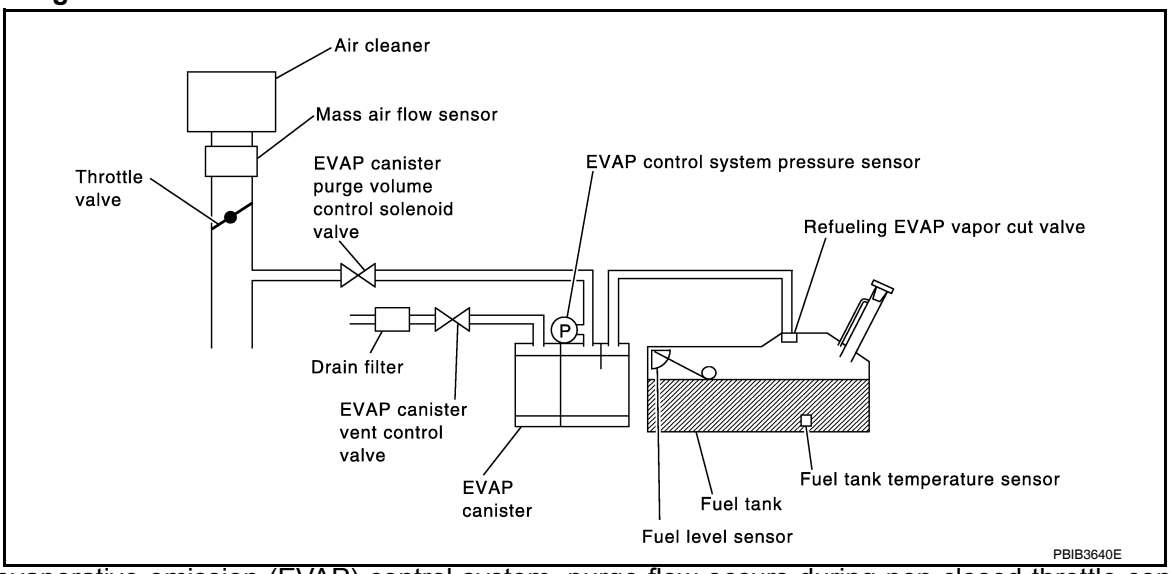

In this evaporative emission (EVAP) control system, purge flow occurs during non-closed throttle conditions. Purge volume is related to air intake volume. Under normal purge conditions (non-closed throttle), the EVAP canister purge volume control solenoid valve is open to admit purge flow. Purge flow exposes the EVAP control system pressure sensor to intake manifold vacuum.

On Board Diagnosis Logic

INFOID:0000000005285418

Under normal conditions (non-closed throttle), sensor output voltage indicates if pressure drop and purge flow are adequate. If not, a malfunction is determined.

DTC No.	Trouble diagnosis name	DTC detecting condition	Possible cause
P0441 0441	EVAP control system incorrect purge flow	• EVAP control system does not operate properly. • EVAP control system has a leak between intake manifold and EVAP control system pressure sensor.	• EVAP canister purge volume control solenoid valve stuck closed • EVAP control system pressure sensor and the circuit • Loose, disconnected or improper connection of rubber tube • Blocked rubber tube • Cracked EVAP canister • EVAP canister purge volume control solenoid valve circuit • Accelerator pedal position sensor • Blocked purge port • EVAP canister vent control valve • Drain filter

DTC Confirmation Procedure

INFOID:0000000005285419

CAUTION:
Always drive vehicle at a safe speed.
NOTE:
If DTC Confirmation Procedure has been previously conducted, always turn ignition switch OFF and wait at least 10 seconds before conducting the next test.
TESTING CONDITION:
Always perform test at a temperature of 5°C (41°F) or more.

WITH CONSULT-III

1. Start engine and warm it up to normal operating temperature.
2. Turn ignition switch OFF and wait at least 10 seconds.
3. Start engine and let it idle for at least 70 seconds.
4. Select “PURG FLOW P0441” of “EVAPORATIVE SYSTEM” in “DTC CONFIRMATION” mode with CONSULT-III.
5. Touch “START”.
   If “COMPLETED” is displayed, go to step 7.
6. When the following conditions are met, “TESTING” will be displayed on the CONSULT-III screen. Maintain the conditions continuously until “TESTING” changes to “COMPLETED”. (It will take at least 35 seconds.)

Shift lever	Suitable position
VHCL SPEED SE	32 - 120 km/h (20 - 75 MPH)
ENG SPEED	500 - 3,800 rpm
B/FUEL SCHDL	1.0 - 10.0 msec
COOLAN TEMP/S	More than 0°C (32 °F)

If TESTING is not changed for a long time, retry from step 2.

7. Make sure that “OK” is displayed after touching “ON-BOARD DIAGNOSIS”. If “NG” is displayed, refer to EC-888, "Diagnosis Procedure".

Overall Function Check

INFOID:0000000005285420

Use this procedure to check the overall monitoring function of the EVAP control system purge flow monitoring. During this check, a 1st trip DTC might not be confirmed.

WITH GST

1. Lift up drive wheels.
2. Start engine and warm it up to normal operating temperature.
3. Turn ignition switch OFF and wait at least 10 seconds.
4. Start engine and wait at least 70 seconds.
5. Set voltmeter probes to ECM terminals 42 (EVAP control system pressure sensor signal) and ground.
6. Check EVAP control system pressure sensor value at idle speed and note it.
7. Establish and maintain the following conditions for at least 1 minute.

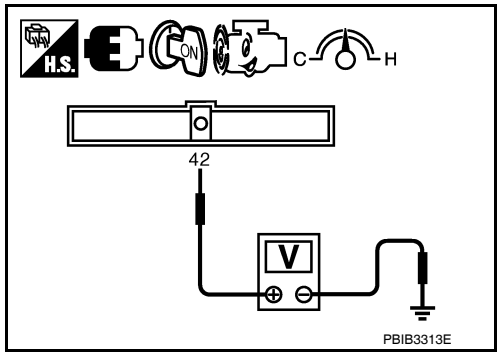

Air conditioner switch	ON
Headlamp switch	ON
Rear window defogger switch	ON
Engine speed	Approx. 3,000 rpm
Shift lever	Any position other than P, N or R

8. Verify that EVAP control system pressure sensor value stays 0.1 V less than the value at idle speed (measured at step 6) for at least 1 second.
9. If NG, go to EC-888, "Diagnosis Procedure".

Diagnosis Procedure

INFOID:0000000005285421

1. CHECK EVAP CANISTER

1. Turn ignition switch OFF.
2. Check EVAP canister for cracks.

OK or NG

OK (With CONSULT-III)>>GO TO 2.
OK (Without CONSULT-III)>>GO TO 3.
NG >> Replace EVAP canister.

2. CHECK PURGE FLOW

With CONSULT-III

1. Disconnect vacuum hose connected to EVAP canister purge volume control solenoid valve at EVAP service port and install vacuum gauge. For the location of EVAP service port, refer to EC-600, "Description".
2. Start engine and let it idle.
3. Select “PURG VOL CONT/V” in “ACTIVE TEST” mode with CONSULT-III.
4. Rev engine up to 2,000 rpm.
5. Touch “Qd” and “Qu” on CONSULT-III screen to adjust “PURG VOL CONT/V” opening and check vacuum existence.

PURG VOL CONT/V	VACUUM
100%	Should exist.
0%	Should not exist.

OK or NG

OK >> GO TO 7.
NG >> GO TO 4.

3. CHECK PURGE FLOW

Without CONSULT-III

1. Start engine and warm it up to normal operating temperature.
2. Stop engine.
3. Disconnect vacuum hose connected to EVAP canister purge volume control solenoid valve at EVAP service port and install vacuum gauge. For the location of EVAP service port, refer to EC-600, "Description".
4. Start engine and let it idle.
   Do not depress accelerator pedal even slightly.
5. Check vacuum gauge indication before 60 seconds passed after starting engine.

   Vacuum should not exist.

6. Revving engine up to 2,000 rpm after 100 seconds passed after starting engine.

   Vacuum should exist.

OK or NG

OK >> GO TO 7.
NG >> GO TO 4.

4. CHECK EVAP PURGE LINE

1. Turn ignition switch OFF.
2. Check EVAP purge line for improper connection or disconnection.
   Refer to EC-600, "Description".

OK or NG

OK >> GO TO 5.
NG >> Repair it.

5. CHECK EVAP PURGE HOSE AND PURGE PORT

1. Disconnect purge hoses connected to EVAP service port **A** and EVAP canister purge volume control solenoid valve **B**.
2. Blow air into each hose and EVAP purge port **C**.

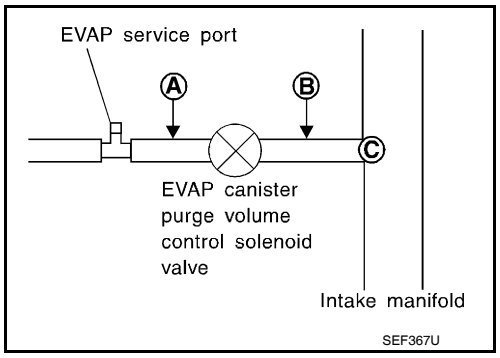

3. Check that air flows freely.

OK or NG

OK (With CONSULT-III)>>GO TO 6.
OK (Without CONSULT-III)>>GO TO 7.
NG >> Repair or clean hoses and/or purge port.

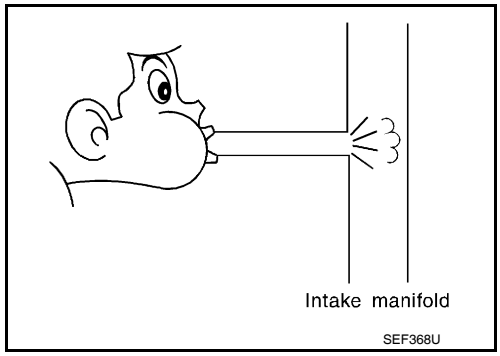

6. CHECK EVAP CANISTER PURGE VOLUME CONTROL SOLENOID VALVE

With CONSULT-III

1. Start engine.
2. Perform “PURG VOL CONT/V” in “ACTIVE TEST” mode with CONSULT-III. Check that engine speed varies according to the valve opening.

OK or NG

OK >> GO TO 8.
NG >> GO TO 7.

7. CHECK EVAP CANISTER PURGE VOLUME CONTROL SOLENOID VALVE

Refer to EC-912, "Component Inspection".

OK or NG

OK >> GO TO 8.
NG >> Replace EVAP canister purge volume control solenoid valve.

8. CHECK EVAP CONTROL SYSTEM PRESSURE SENSOR CONNECTOR

1. Disconnect EVAP control system pressure sensor harness connector.
2. Check connectors for water.

Water should not exist

OK or NG

OK >> GO TO 9.
NG >> Replace EVAP control system pressure sensor.

9. CHECK EVAP CONTROL SYSTEM PRESSURE SENSOR FUNCTION

Refer to EC-928 for DTC P0452 and EC-935 for DTC P0453.

OK or NG

OK >> GO TO 10.
NG >> Replace EVAP control system pressure sensor.

10. CHECK RUBBER TUBE FOR CLOGGING

1. Disconnect rubber tube connected to EVAP canister vent control valve.
2. Check the rubber tube for clogging.

OK or NG

OK >> GO TO 11.
NG >> Clean the rubber tube using an air blower.

11. CHECK DRAIN FILTER

Refer to EC-891, "Component Inspection".

OK or NG

OK >> GO TO 12.
NG >> Replace drain filter.

12. CHECK EVAP CANISTER VENT CONTROL VALVE

Refer to EC-917, "Component Inspection".

OK or NG

OK >> GO TO 13.
NG >> Replace EVAP canister vent control valve.

13. CHECK EVAP PURGE LINE

Inspect EVAP purge line (pipe and rubber tube). Check for evidence of leaks.
Refer to EC-600, "Description".

OK or NG

OK >> GO TO 14.
NG >> Replace it.

14. CLEAN EVAP PURGE LINE

Clean EVAP purge line (pipe and rubber tube) using air blower.

>> GO TO 15.

15. CHECK INTERMITTENT INCIDENT

Refer to EC-706.

>> **INSPECTION END**

Component Inspection

INFOID:0000000005285422

DRAIN FILTER

1. Check visually for insect nests in the drain filter air inlet.
2. Check visually for cracks or flaws in the appearance.
3. Check visually for cracks or flaws in the hose.
4. Blow air into port A and check that it flows freely out of port B.
5. Block port B.
6. Blow air into port A and check that there is no leakage.
7. If NG, replace drain filter.

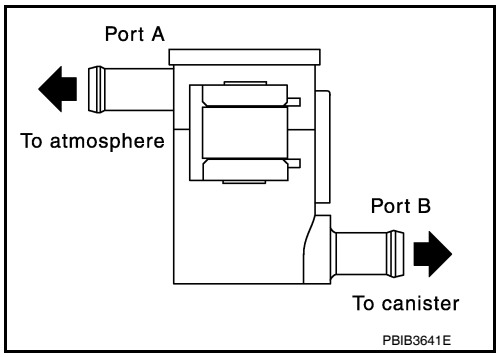

DTC P0442 EVAP CONTROL SYSTEM

On Board Diagnosis Logic

INFOID:0000000005285423

This diagnosis detects leaks in the EVAP purge line using engine intake manifold vacuum.
If pressure does not increase, the ECM will check for leaks in the line between the fuel tank and EVAP canister purge volume control solenoid valve, under the following Vacuum test conditions.
The EVAP canister vent control valve is closed to shut the EVAP purge line off. The EVAP canister purge volume control solenoid valve will then be opened to depressurize the EVAP purge line using intake manifold vacuum. After this occurs, the EVAP canister purge volume control solenoid valve will be closed.

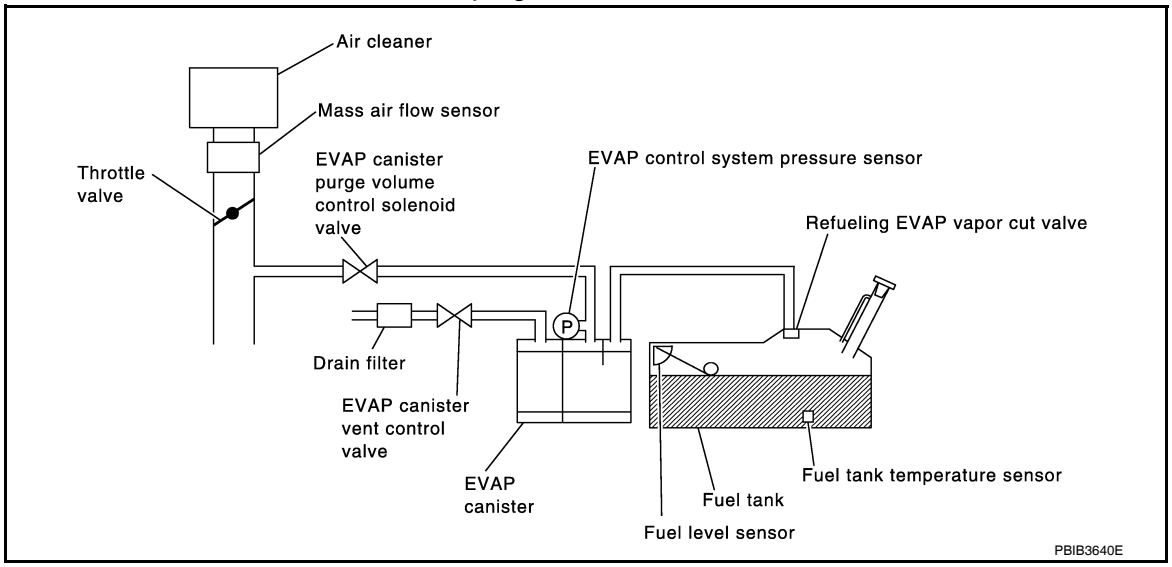

DTC No.	Trouble diagnosis name	DTC detecting condition	Possible cause
P0442 0442	EVAP control system small leak detected (negative pressure)	EVAP control system has a leak, EVAP control system does not operate properly.	• Incorrect fuel tank vacuum relief valve • Incorrect fuel filler cap used • Fuel filler cap remains open or fails to close. • Foreign matter caught in fuel filler cap. • Leak is in line between intake manifold and EVAP canister purge volume control solenoid valve. • Foreign matter caught in EVAP canister vent control valve. • EVAP canister or fuel tank leaks • EVAP purge line (pipe and rubber tube) leaks • EVAP purge line rubber tube bent • Loose or disconnected rubber tube • EVAP canister vent control valve and the circuit • EVAP canister purge volume control solenoid valve and the circuit • Fuel tank temperature sensor • O-ring of EVAP canister vent control valve is missing or damaged • Drain filter • EVAP canister is saturated with water • EVAP control system pressure sensor • Fuel level sensor and the circuit • Refueling EVAP vapor cut valve • ORVR system leaks

CAUTION:
- **Use only a genuine NISSAN fuel filler cap as a replacement. If an incorrect fuel filler cap is used, the MIL may come on.**
- **If the fuel filler cap is not tightened properly, the MIL may come on.**
- **Use only a genuine NISSAN rubber tube as a replacement.**

DTC Confirmation Procedure

INFOID:0000000005285424

NOTE:
If DTC Confirmation Procedure has been previously conducted, always turn ignition switch OFF and wait at least 10 seconds before conducting the next test.

TESTING CONDITION:
- **Perform "DTC WORK SUPPORT" when the fuel level is between 1/4 and 3/4 full, and vehicle is placed on flat level surface.**
- **Always perform test at a temperature of 0 to 10°C (32 to 140°F).**
- **Open engine hood before conducting following procedure.**

WITH CONSULT-III

1. Turn ignition switch ON.
2. Turn ignition switch OFF and wait at least 10 seconds.
3. Turn ignition switch ON and select "DATA MONITOR" mode with CONSULT-III.
4. Check the following conditions are met.
   COOLAN TEMP/S: 0 - 100°C (32 - 212°F)
   INT/A TEMP SE: 0 - 60°C (32 - 140°F)
5. Select "EVAP SML LEAK P0442/P1442" of "EVAPORATIVE SYSTEM" in "DTC WORK SUPPORT" mode with CONSULT-III.
   Follow the instruction displayed.
   NOTE:
   If the engine speed cannot be maintained within the range displayed on the CONSULT-III screen, go to EC-648, "Basic Inspection".
6. Make sure that "OK" is displayed.
   If "NG" is displayed, refer to EC-893, "Diagnosis Procedure".

WITH GST

NOTE:
Be sure to read the explanation of Driving Pattern on EC-617, "Emission-related Diagnostic Information" before driving vehicle.

1. Start engine.
2. Drive vehicle according to Driving Pattern, EC-617, "Emission-related Diagnostic Information"
3. Stop vehicle.
4. Turn ignition switch OFF and wait at least 10 seconds and then turn ignition switch ON.
5. Select Service $07 with GST.

- If P0442 is displayed on the screen, go to EC-893, "Diagnosis Procedure".
- If P0441 is displayed on the screen, go to EC-888, "Diagnosis Procedure" for DTC P0441.

Diagnosis Procedure

INFOID:0000000005285425

1. CHECK FUEL FILLER CAP DESIGN

1. Turn ignition switch OFF.
2. Check for genuine NISSAN fuel filler cap design.

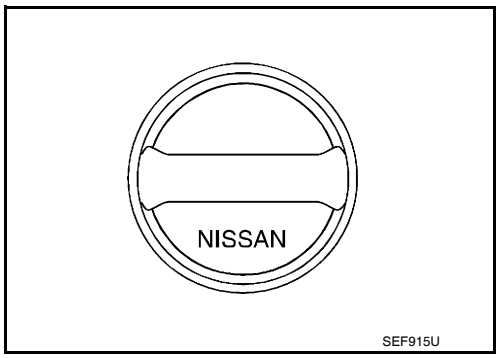

OK or NG

OK >> GO TO 2.
NG >> Replace with genuine NISSAN fuel filler cap.

2. CHECK FUEL FILLER CAP INSTALLATION

Check that the cap is tightened properly by rotating the cap clockwise.

OK or NG

OK >> GO TO 3.
NG >> 1. Open fuel filler cap, then clean cap and fuel filler neck threads using air blower.

2. Retighten until reteaching sound is heard.

3. CHECK FUEL FILLER CAP FUNCTION

Check for air releasing sound while opening the fuel filler cap.

OK or NG

OK >> GO TO 5.
NG >> GO TO 4.

4. CHECK FUEL TANK VACUUM RELIEF VALVE

Refer to EC-602, "Component Inspection".

OK or NG

OK >> GO TO 5.
NG >> Replace fuel filler cap with a genuine one.

5. INSTALL THE PRESSURE PUMP

To locate the EVAP leak, install EVAP service port adapter and pressure pump to EVAP service port securely.
For the location of EVAP service port (2), refer to EC-600, "Description".

- EVAP canister purge volume control solenoid valve (1)
- ⇦: Vehicle front

NOTE:
Improper installation of the EVAP service port adapter to the EVAP service port may cause leaking.

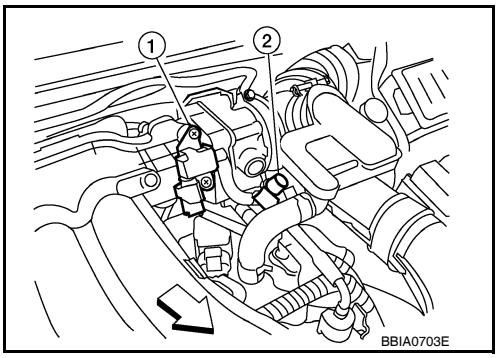

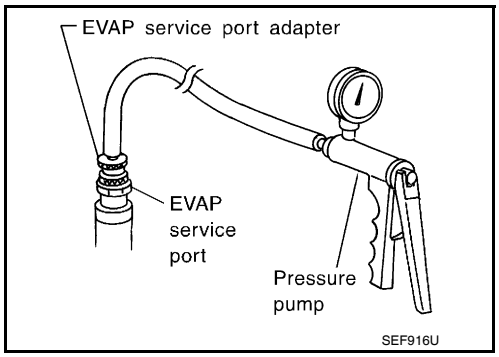

With CONSULT-III>>GO TO 6.
Without CONSULT-III>>GO TO 7.

6. CHECK FOR EVAP LEAK

With CONSULT-III

1. Turn ignition switch ON.
2. Select “EVAP SYSTEM CLOSE” of “WORK SUPPORT” mode with CONSULT-III.
3. Touch “START” and apply pressure into the EVAP line until the pressure indicator reaches the middle of the bar graph.
   CAUTION:
   - **Never use compressed air or a high pressure pump.**
   - **Do not exceed 4.12 kPa (0.042 kg/cm^2, 0.6 psi) of pressure in the system.**

4. Using EVAP leak detector, locate the EVAP leak. For the leak detector, refer to the instruction manual for more details. Refer to EC-600, "Description".

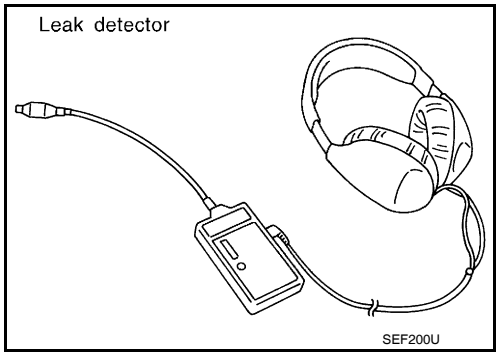

OK or NG

OK >> GO TO 8.
NG >> Repair or replace.

7. CHECK FOR EVAP LEAK

Without CONSULT-III

1. Turn ignition switch OFF.
2. Apply 12 volts DC to EVAP canister vent control valve. The valve will close. (Continue to apply 12 volts until the end of test.)
- This illustration is a view from under vehicle
- EVAP control system pressure sensor (1)
- EVAP canister (2)
- EVAP canister vent control valve (3)
3. Pressurize the EVAP line using pressure pump with 1.3 to 2.7 kPa (10 to 20 mmHg, 0.39 to 0.79 inHg), then remove pump and EVAP service port adapter.

CAUTION:
- **Never use compressed air or a high pressure pump.**
- **Do not exceed 4.12 kPa (0.042 kg/cm^2, 0.6 psi) of pressure in the system.**

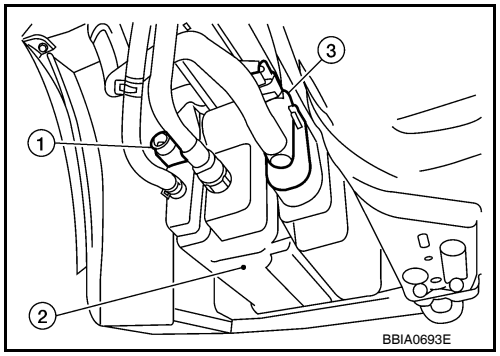

4. Using EVAP leak detector, locate the EVAP leak. For the leak detector, refer to the instruction manual for more details. Refer to EC-600, "Description".

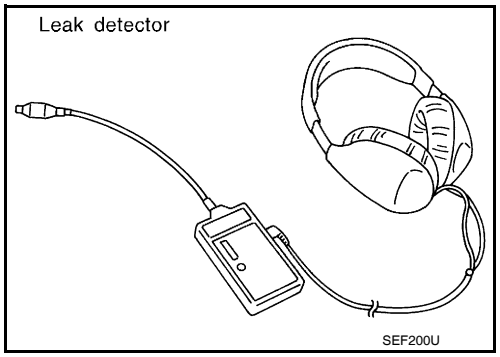

OK or NG

OK >> GO TO 8.
NG >> Repair or replace.

8. CHECK DRAIN FILTER

Refer to EC-898, "Component Inspection".

OK or NG

OK >> GO TO 9.
NG >> Replace drain filter.

9. CHECK EVAP CANISTER VENT CONTROL VALVE

Check the following,
- EVAP canister vent control valve is installed properly.
  Refer to EC-604, "Removal and Installation".
- EVAP canister vent control valve.
  Refer to EC-917, "Component Inspection".

OK or NG

OK >> GO TO 10.
NG >> Repair or replace EVAP canister vent control valve and O-ring.

10. CHECK IF EVAP CANISTER SATURATED WITH WATER

1. Remove EVAP canister with EVAP canister vent control valve and EVAP control system pressure sensor attached.
2. Does water drain from the EVAP canister?

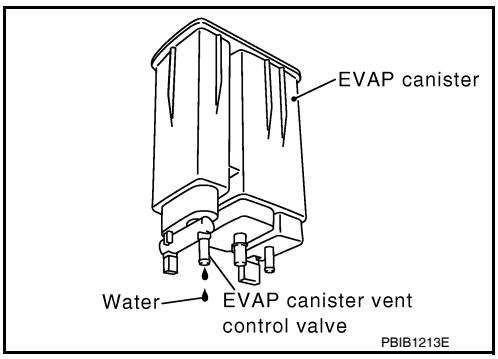

Yes or No

Yes >> GO TO 11.
No (With CONSULT-III)>>GO TO 13.
No (Without CONSULT-III)>>GO TO 14.

11. CHECK EVAP CANISTER

Weigh the EVAP canister with the EVAP canister vent control valve and EVAP control system pressure sensorattached.

The weight should be less than 1.9 kg (4.2 lb).

OK or NG

OK (With CONSULT-III)>>GO TO 13.
OK (Without CONSULT-III)>>GO TO 14.
NG >> GO TO 12.

12. DETECT MALFUNCTIONING PART

Check the following.
- EVAP canister for damage
- EVAP hose connected to EVAP canister for clogging or poor connection

>> Repair hose or replace EVAP canister.

13. CHECK EVAP CANISTER PURGE VOLUME CONTROL SOLENOID VALVE OPERATION

With CONSULT-III

1. Disconnect vacuum hose to EVAP canister purge volume control solenoid valve at EVAP service port.
2. Start engine.
3. Perform “PURG VOL CONT/V” in “ACTIVE TEST” mode.
4. Touch “Qu” on CONSULT-III screen to increase “PURG VOL CONT/V” opening to 100%.
5. Check vacuum hose for vacuum when revving engine up to 2,000 rpm.

Vacuum should exist.

OK or NG

OK >> GO TO 16.
NG >> GO TO 15.

14. CHECK EVAP CANISTER PURGE VOLUME CONTROL SOLENOID VALVE OPERATION

Without CONSULT-III

1. Start engine and warm it up to normal operating temperature.
2. Stop engine.
3. Disconnect vacuum hose to EVAP canister purge volume control solenoid valve at EVAP service port.
4. Start engine and let it idle for at least 80 seconds.
5. Check vacuum hose for vacuum when revving engine up to 2,000 rpm.

Vacuum should exist.

OK or NG

OK >> GO TO 17.
NG >> GO TO 15.

15. CHECK VACUUM HOSE

Check vacuum hoses for clogging or disconnection. Refer to EC-676, "Vacuum Hose Drawing".

OK or NG

OK >> GO TO 16.
NG >> Repair or reconnect the hose.

16. CHECK EVAP CANISTER PURGE VOLUME CONTROL SOLENOID VALVE

Refer to EC-912, "Component Inspection".

OK or NG

OK >> GO TO 17.
NG >> Replace EVAP canister purge volume control solenoid valve.

17. CHECK FUEL TANK TEMPERATURE SENSOR

Refer to EC-843, "Component Inspection".

OK or NG

OK >> GO TO 18.
NG >> Replace fuel level sensor unit.

18. CHECK EVAP CONTROL SYSTEM PRESSURE SENSOR

Refer to EC-934, "Component Inspection".

OK or NG

OK >> GO TO 19.
NG >> Replace EVAP control system pressure sensor.

19. CHECK EVAP PURGE LINE

Check EVAP purge line (pipe, rubber tube, fuel tank and EVAP canister) for cracks or improper connection. Refer to EC-600.

OK or NG

OK >> GO TO 20.
NG >> Repair or reconnect the hose.

20. CLEAN EVAP PURGE LINE

Clean EVAP purge line (pipe and rubber tube) using air blower.

>> GO TO 21.

21. CHECK EVAP/ORVR LINE

Check EVAP/ORVR line between EVAP canister and fuel tank for clogging, kink, looseness and improper connection. For location, refer to EC-607.

OK or NG

OK >> GO TO 22.
NG >> Repair or replace hoses and tubes.

22. CHECK RECIRCULATION LINE

Check recirculation line between filler neck tube and fuel tank for clogging, kink, cracks, looseness and improper connection.

OK or NG

OK >> GO TO 23.
NG >> Repair or replace hoses, tubes or filler neck tube.

23. CHECK REFUELING EVAP VAPOR CUT VALVE

Refer to EC-610, "Component Inspection".

OK or NG

OK >> GO TO 24.
NG >> Replace refueling EVAP vapor cut valve with fuel tank.

24. CHECK FUEL LEVEL SENSOR

Refer to FL-6.

OK or NG

OK >> GO TO 25.
NG >> Replace fuel level sensor unit.

25. CHECK INTERMITTENT INCIDENT

Refer to EC-706.

>> **INSPECTION END**

Component Inspection

INFOID:0000000005285426

DRAIN FILTER

1. Check visually for insect nests in the drain filter air inlet.
2. Check visually for cracks or flaws in the appearance.
3. Check visually for cracks or flaws in the hose.
4. Blow air into port A and check that it flows freely out of port B.
5. Block port B.
6. Blow air into port A and check that there is no leakage.
7. If NG, replace drain filter.

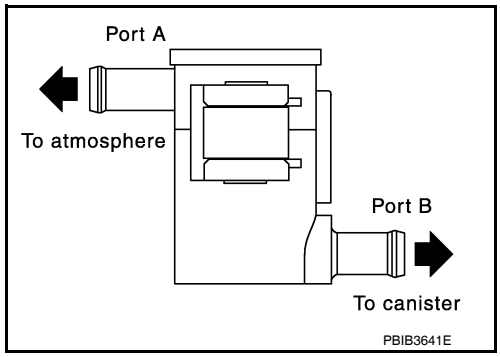

DTC P0443 EVAP CANISTER PURGE VOLUME CONTROL SOLENOID VALVE

Description

INFOID:0000000005285427

SYSTEM DESCRIPTION

Sensor	Input Signal to ECM	ECM function	Actuator
Crankshaft position sensor (POS) Camshaft position sensor (PHASE)	Engine speed*1	EVAP canister purge flow control	EVAP canister purge volume control solenoid valve
Mass air flow sensor	Amount of intake air		
Engine coolant temperature sensor	Engine coolant temperature		
Battery	Battery voltage*1		
Throttle position sensor	Throttle position		
Accelerator pedal position sensor	Accelerator pedal position		
Air fuel ratio (A/F) sensor 1	Density of oxygen in exhaust gas (Mixture ratio feedback signal)		
Fuel tank temperature sensor	Fuel temperature in fuel tank		
ABS actuator and electric unit (control unit)	Vehicle speed*2		
Combination meter			

*1: ECM determines the start signal status by the signals of engine speed and battery voltage.

*2: This signal is sent to the ECM though CAN communication line.

This system controls flow rate of fuel vapor from the EVAP canister. The opening of the vapor by-pass passage in the EVAP canister purge volume control solenoid valve changes to control the flow rate. The EVAP canister purge volume control solenoid valve repeats ON/OFF operation according to the signal sent from the ECM. The opening of the valve varies for optimum engine control. The optimum value stored in the ECM is determined by considering various engine conditions. When the engine is operating, the flow rate of fuel vapor from the EVAP canister is regulated as the air flow changes.

COMPONENT DESCRIPTION

The EVAP canister purge volume control solenoid valve uses a ON/OFF duty to control the flow rate of fuel vapor from the EVAP canister. The EVAP canister purge volume control solenoid valve is moved by ON/OFF pulses from the ECM. The longer the ON pulse, the greater the amount of fuel vapor that will flow through the valve.

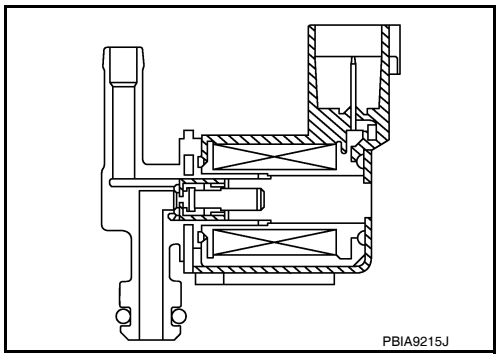

CONSULT-III Reference Value in Data Monitor Mode

INFOID:0000000005285428

Specification data are reference values.

Monitor item	Condition		Specification
PURG VOL C/V	• Engine: After warming up • Shift lever: P or N (CVT), Neutral (M/T) • Air conditioner switch: OFF • No load	Idle (Accelerator pedal is not depressed even slightly, after engine starting)	0%
		2,000 rpm	0 - 50%

On Board Diagnosis Logic

INFOID:0000000005285429

DTC No.	Trouble diagnosis name	DTC detecting condition		Possible cause
P0443 0443	EVAP canister purge volume control solenoid valve	A)	The canister purge flow is detected during the vehicle is stopped while the engine is running, even when EVAP canister purge volume control solenoid valve is completely closed.	• EVAP control system pressure sensor • EVAP canister purge volume control solenoid valve (EVAP canister purge volume control solenoid valve is stuck open.) • EVAP canister vent control valve • Drain filter • EVAP canister • Hoses (Hoses are connected incorrectly or clogged.)
		B)	The canister purge flow is detected during the specified driving conditions, even when EVAP canister purge volume control solenoid valve is completely closed.	

DTC Confirmation Procedure

INFOID:0000000005285430

Perform PROCEDURE FOR MALFUNCTION A first.
If the DTC cannot be confirmed, perform PROCEDURE FOR MALFUNCTION B.
NOTE:
If DTC Confirmation Procedure has been previously conducted, always turn ignition switch OFF and wait at least 10 seconds before conducting the next test.

PROCEDURE FOR MALFUNCTION A

TESTING CONDITION:
- Perform "DTC Confirmation Procedure" when the fuel level is between 1/4 and 3/4 full, and vehicle is placed on flat level surface.
- Always perform test at a temperature of 5 to 60°C (41 to 140°F).
- Cool the vehicle so that engine coolant temperature becomes same level as ambient temperature.

WITH CONSULT-III

1. Turn ignition switch ON and select "DATA MONITOR" mode with CONSULT-III.
2. Check that the following condition are met.
   FUEL T/TMP SE: 0 – 35°C (32 – 95°F)
3. Start engine and wait at least 60 seconds.
4. Check 1st trip DTC.
5. If 1st trip DTC is detected, go to EC-903, "Diagnosis Procedure".

WITH GST

1. Turn ignition switch ON.
2. Set voltmeter probes to ECM terminal 43 (FTT sensor signal) and ground.
3. Check that the voltage is 3.1 – 4.2 V.
4. Start engine and wait at least 60 seconds.
5. Check 1st trip DTC.
6. If 1st trip DTC is detected, go to EC-903, "Diagnosis Procedure".

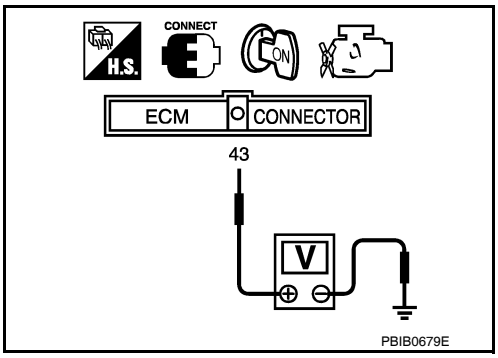

PROCEDURE FOR MALFUNCTION B

NOTE:
If DTC Confirmation Procedure has been previously conducted, always turn ignition switch OFF and wait at least 10 seconds before conducting the next test.
TESTING CONDITION:
Always perform test at a temperature of 5°C (41°F) or more.

WITH CONSULT-III

1. Start engine and warm it up to normal operating temperature.
2. Turn ignition switch OFF and wait at least 10 seconds.
3. Turn ignition switch ON.
4. Select “PURG VOL CN/V P1444” of “EVAPORATIVE SYSTEM” in “DTC WORK SUPPORT” mode with CONSULT-III.
5. Touch “START”.
6. Start engine and let it idle until “TESTING” on CONSULT-III changes to “COMPLETED”. (It will take approximately 10 seconds.)
   If “TESTING” is not displayed after 5 minutes, retry from step 2.
7. Make sure that “OK” is displayed after touching “SELF-DIAG RESULTS”. If “NG” is displayed, refer to EC-903, "Diagnosis Procedure".

WITH GST

1. Start engine and warm it up to normal operating temperature.
2. Turn ignition switch OFF and wait at least 10 seconds.
3. Start engine and let it idle for at least 20 seconds.
4. Select Service $07 with GST.
5. If 1st trip DTC is detected, go to EC-903, "Diagnosis Procedure".

Wiring Diagram

INFOID:0000000005285431

EC-PGC/V-01

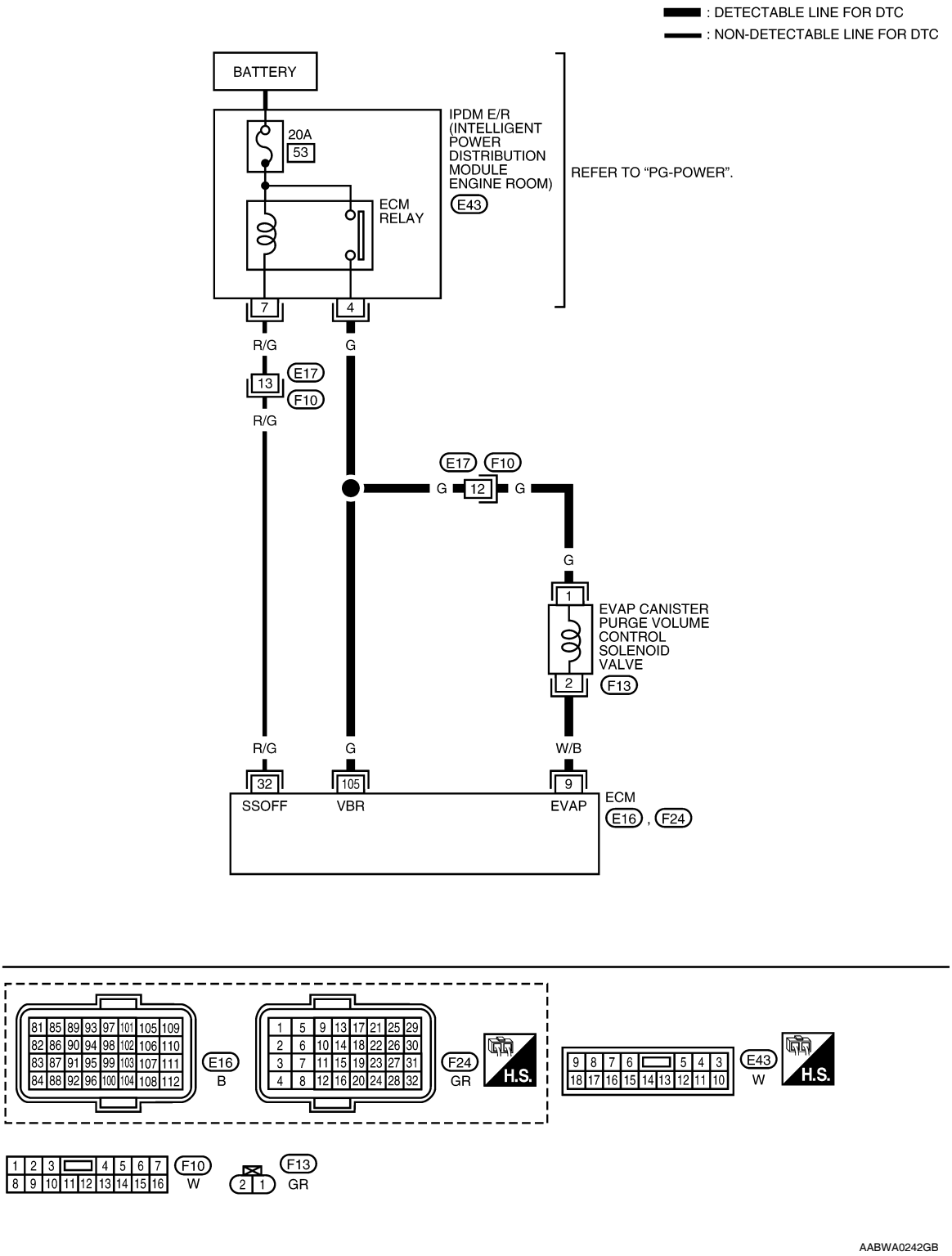

Specification data are reference values and are measured between each terminal and ground.
Pulse signal is measured by CONSULT-III.

CAUTION:

Do not use ECM ground terminals when measuring input/output voltage. Doing so may result in damage to the ECM's transistor. Use a ground other than ECM terminals, such as the ground.

TERMINAL NO.	WIRE COLOR	ITEM	CONDITION	DATA (DC Voltage)
9	W/B	EVAP canister purge volume control solenoid valve	**[Engine is running]** • Idle speed • Accelerator pedal: Not depressed even slightly, after engine starting.	BATTERY VOLTAGE (11 - 14 V)★ 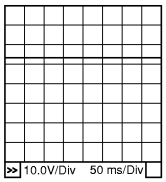 PBIB0050E
			[Engine is running] • Engine speed: About 2,000 rpm (More than 100 seconds after starting engine)	Approximately 10 V★ 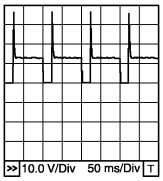 PBIB0520E
32	R/G	ECM relay (Self shut-off)	**[Engine is running]** **[Ignition switch: OFF]** • For a few seconds after turning ignition switch OFF	0 - 1.0 V
			[Ignition switch: OFF] • More than a few seconds after turning ignition switch OFF	BATTERY VOLTAGE (11 - 14 V)
105	G	Power supply for ECM	**[Ignition switch: ON]**	BATTERY VOLTAGE (11 - 14 V)

★: Average voltage for pulse signal (Actual pulse signal can be confirmed by oscilloscope.)

Diagnosis Procedure

INFOID:0000000005285432

1. CHECK EVAP CANISTER PURGE VOLUME CONTROL SOLENOID VALVE POWER SUPPLY CIRCUIT

1. Turn ignition switch OFF.
2. Disconnect EVAP canister purge volume control solenoid valve (1) harness connector.
- EVAP service port (2)
- ⇦: Vehicle front
3. Turn ignition switch ON.

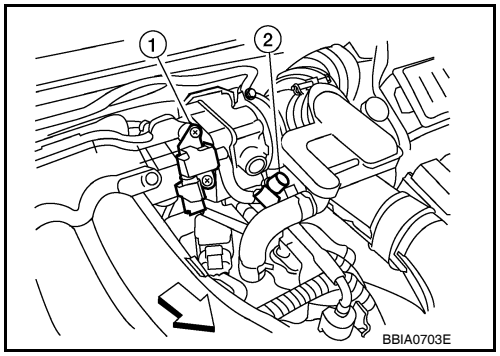

4. Check voltage between EVAP canister purge volume control solenoid valve terminal 1 and ground with CONSULT-III or tester.

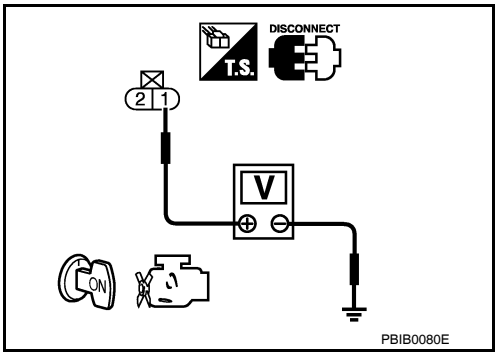

Voltage: Battery voltage

OK or NG

OK >> GO TO 3.
NG >> GO TO 2.

2. DETECT MALFUNCTIONING PART

Check the following.
- Harness connectors E17, F10
- Harness for open or short between EVAP canister purge volume control solenoid valve and IPDM E/R
- Harness for open or short between EVAP canister purge volume control solenoid valve and ECM

>> Repair open circuit or short to ground or short to power in harness or connectors.

3. CHECK EVAP CANISTER PURGE VOLUME CONTROL SOLENOID VALVE OUTPUT SIGNAL CIRCUIT FOR OPEN AND SHORT

1. Turn ignition switch OFF.
2. Disconnect ECM harness connector.
3. Check harness continuity between ECM terminal 9 and EVAP canister purge volume control solenoid valve terminal 2. Refer to Wiring Diagram.

Continuity should exist.

4. Also check harness for short to ground and short to power.

OK or NG

OK >> GO TO 4.
NG >> Repair open circuit or short to ground or short to power in harness or connectors.

4. CHECK EVAP CONTROL SYSTEM PRESSURE SENSOR CONNECTOR

1. Disconnect EVAP control system pressure sensor harness connector.
- This illustration is a view from under vehicle
- EVAP control system pressure sensor (1)
- EVAP canister (2)
- EVAP canister vent control valve (3)
2. Check connectors for water.

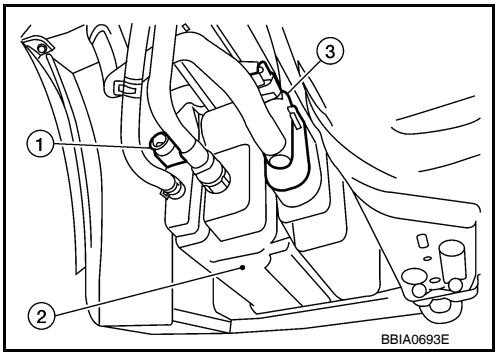

Water should not exist.

OK or NG

OK >> GO TO 5.
NG >> Replace EVAP control system pressure sensor.

5. CHECK EVAP CONTROL SYSTEM PRESSURE SENSOR

Refer to EC-934, "Component Inspection".

OK or NG

OK (With CONSULT-III)>>GO TO 6.
OK (Without CONSULT-III)>>GO TO 7.
NG >> Replace EVAP control system pressure sensor.

6. CHECK EVAP CANISTER PURGE VOLUME CONTROL SOLENOID VALVE

With CONSULT-III

1. Turn ignition switch OFF.

2. Reconnect harness connectors disconnected.
3. Start engine.
4. Perform “PURG VOL CONT/V” in “ACTIVE TEST” mode with CONSULT-III. Check that engine speed varies according to the valve opening.

OK or NG

OK >> GO TO 8.
NG >> GO TO 7.

7. CHECK EVAP CANISTER PURGE VOLUME CONTROL SOLENOID VALVE

Refer to EC-906, "Component Inspection".

OK or NG

OK >> GO TO 8.
NG >> Replace EVAP canister purge volume control solenoid valve.

8. CHECK RUBBER TUBE FOR CLOGGING

1. Disconnect rubber tube connected to EVAP canister vent control valve.
2. Check the rubber tube for clogging.

OK or NG

OK >> GO TO 9.
NG >> Clean the rubber tube using an air blower.

9. CHECK DRAIN FILTER

Refer to EC-891, "Component Inspection".

OK or NG

OK >> GO TO 10.
NG >> Replace drain filter.

10. CHECK EVAP CANISTER VENT CONTROL VALVE

Refer to EC-917, "Component Inspection".

OK or NG

OK >> GO TO 11.
NG >> Replace EVAP canister vent control valve.

11. CHECK IF EVAP CANISTER SATURATED WITH WATER

1. Remove EVAP canister with EVAP canister vent control valve attached.
2. Does water drain from the EVAP canister?

YES or NO

YES >> GO TO 12.
NO >> GO TO 14.

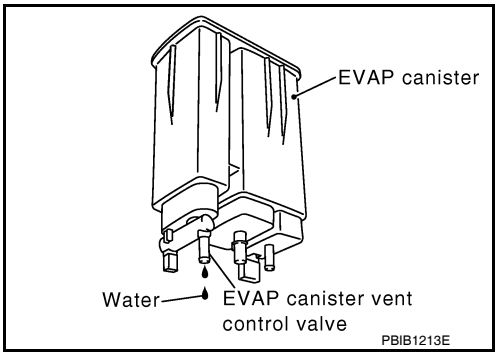

12. CHECK EVAP CANISTER

Weigh the EVAP canister with the EVAP canister vent control valve and EVAP control system pressure sensor attached.

The weight should be less than 1.9 kg (4.2 lb).

OK or NG

OK >> GO TO 14.
NG >> GO TO 13.

13. DETECT MALFUNCTIONING PART

Check the following.
- EVAP canister for damage
- EVAP hose between EVAP canister and vehicle frame for clogging or poor connection

>> Repair hose or replace EVAP canister.

14. CHECK INTERMITTENT INCIDENT

Refer to EC-706.

>> **INSPECTION END**

Component Inspection

INFOID:0000000005285433

EVAP CANISTER PURGE VOLUME CONTROL SOLENOID VALVE

WITH CONSULT-III

Check air passage continuity of EVAP canister purge volume control solenoid valve under the following conditions.

Condition (PURG VOL CONT/V value)	Air passage continuity between A and B
100%	Yes
0%	No

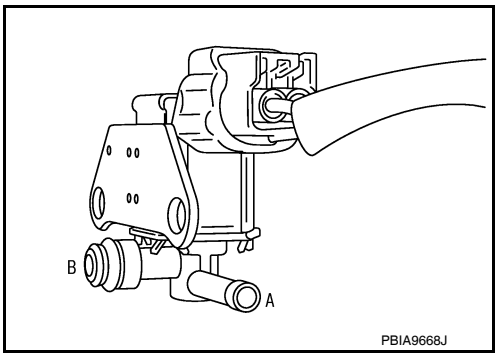

WITHOUT CONSULT-III

Check air passage continuity of EVAP canister purge volume control solenoid valve under the following conditions.

Condition	Air passage continuity between A and B
12 V direct current supply between terminals 1 and 2	Yes
No supply	No

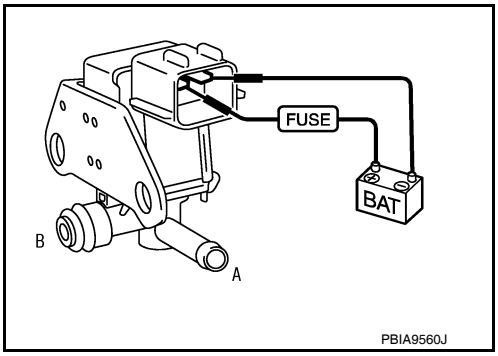

Removal and Installation

INFOID:0000000005285434

EVAP CANISTER PURGE VOLUME CONTROL SOLENOID VALVE

Refer to EM-18.

DTC P0444, P0445 EVAP CANISTER PURGE VOLUME CONTROL SOLENOID VALVE

Description

INFOID:0000000005285435

SYSTEM DESCRIPTION

Sensor	Input Signal to ECM	ECM function	Actuator
Crankshaft position sensor (POS) Camshaft position sensor (PHASE)	Engine speed*1	EVAP canister purge flow control	EVAP canister purge volume control solenoid valve
Mass air flow sensor	Amount of intake air		
Engine coolant temperature sensor	Engine coolant temperature		
Battery	Battery voltage*1		
Throttle position sensor	Throttle position		
Accelerator pedal position sensor	Accelerator pedal position		
Air fuel ratio (A/F) sensor 1	Density of oxygen in exhaust gas (Mixture ratio feedback signal)		
Fuel tank temperature sensor	Fuel temperature in fuel tank		
ABS actuator and electric unit (control unit)	Vehicle speed*2		
Combination meter			

*1: The ECM determines the start signal status by the signal of engine speed and battery voltage.

*2: This signal is sent to the ECM through CAN communication line.

This system controls flow rate of fuel vapor from the EVAP canister. The opening of the vapor by-pass passage in the EVAP canister purge volume control solenoid valve changes to control the flow rate. The EVAP canister purge volume control solenoid valve repeats ON/OFF operation according to the signal sent from the ECM. The opening of the valve varies for optimum engine control. The optimum value stored in the ECM is determined by considering various engine conditions. When the engine is operating, the flow rate of fuel vapor from the EVAP canister is regulated as the air flow changes.

COMPONENT DESCRIPTION

The EVAP canister purge volume control solenoid valve uses a ON/OFF duty to control the flow rate of fuel vapor from the EVAP canister. The EVAP canister purge volume control solenoid valve is moved by ON/OFF pulses from the ECM. The longer the ON pulse, the greater the amount of fuel vapor that will flow through the valve.

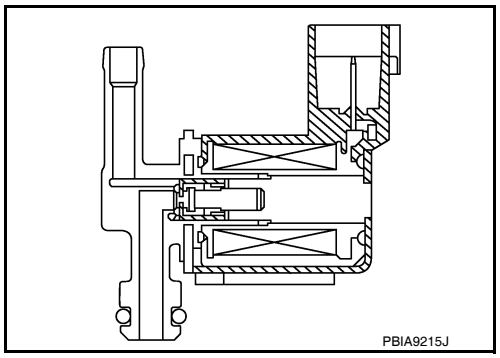

CONSULT-III Reference Value in Data Monitor Mode

INFOID:0000000005285436

Specification data are reference values.

Monitor item	Condition		Specification
PURG VOL C/V	• Engine: After warming up • Shift lever: N (CVT), Neutral (M/T) • Air conditioner switch: OFF • No load	Idle (Accelerator pedal is not depressed even slightly, after engine starting)	0%
		2,000 rpm	0 - 50%

On Board Diagnosis Logic

INFOID:0000000005285437

DTC No.	Trouble diagnosis name	DTC detecting condition	Possible cause
P0444 0444	EVAP canister purge volume control solenoid valve circuit open	An excessively low voltage signal is sent to ECM through the valve	• Harness or connectors (EVAP canister purge volume control solenoid valve circuit is open or shorted.) • EVAP canister purge volume control solenoid valve
P0445 0445	EVAP canister purge volume control solenoid valve circuit shorted	An excessively high voltage signal is sent to ECM through the valve	• Harness or connectors (EVAP canister purge volume control solenoid valve circuit is shorted.) • EVAP canister purge volume control solenoid valve

DTC Confirmation Procedure

INFOID:0000000005285438

NOTE:
If DTC Confirmation Procedure has been previously conducted, always turn ignition switch OFF and wait at least 10 seconds before conducting the next test.
TESTING CONDITION:
Before performing the following procedure, confirm battery voltage is more than 11 V at idle.
1. Start engine and let it idle for at least 13 seconds.
2. Check 1st trip DTC.
3. If 1st trip DTC is detected, go to EC-910, "Diagnosis Procedure".

Wiring Diagram

INFOID:0000000005285439

EC-PGC/V-01

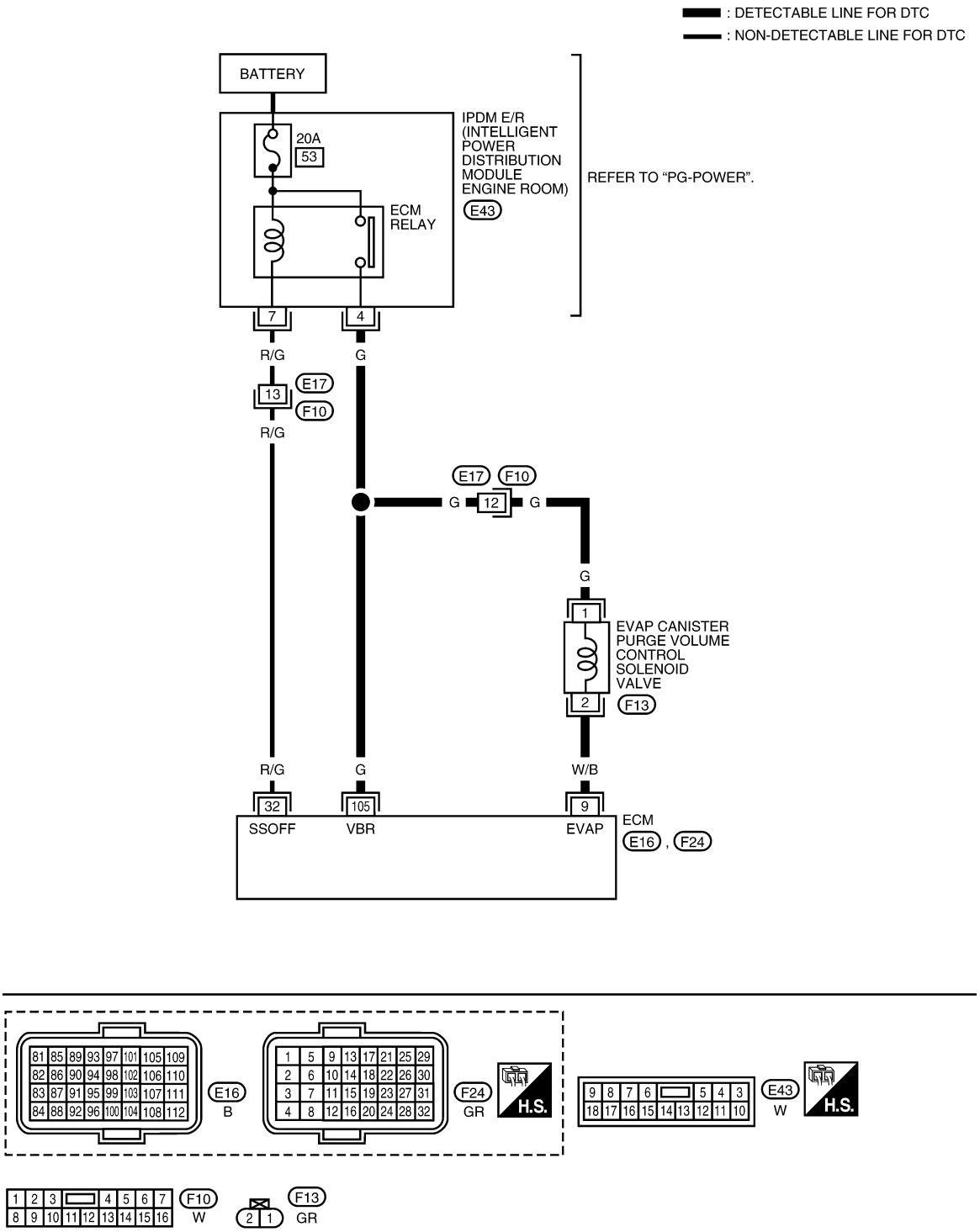

Specification data are reference values and are measured between each terminal and ground.
Pulse signal is measured by CONSULT-III.

CAUTION:

Do not use ECM ground terminals when measuring input/output voltage. Doing so may result in damage to the ECM's transistor. Use a ground other than ECM terminals, such as the ground.

TERMINAL NO.	WIRE COLOR	ITEM	CONDITION	DATA (DC Voltage)
9	W/B	EVAP canister purge volume control solenoid valve	**[Engine is running]** • Idle speed • Accelerator pedal: Not depressed even slightly, after engine starting.	BATTERY VOLTAGE (11 - 14 V)★ 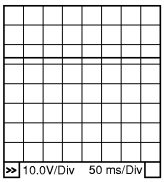 PBIB0050E
			[Engine is running] • Engine speed: About 2,000 rpm (More than 100 seconds after starting engine)	Approximately 10 V★ 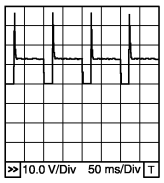 PBIB0520E
32	R/G	ECM relay (Self shut-off)	**[Engine is running]** **[Ignition switch: OFF]** • For a few seconds after turning ignition switch OFF	0 - 1.0 V
			[Ignition switch: OFF] • More than a few seconds after turning ignition switch OFF	BATTERY VOLTAGE (11 - 14 V)
105	G	Power supply for ECM	**[Ignition switch: ON]**	BATTERY VOLTAGE (11 - 14 V)

★: Average voltage for pulse signal (Actual pulse signal can be confirmed by oscilloscope.)

Diagnosis Procedure

INFOID:0000000005285440

1. CHECK EVAP CANISTER PURGE VOLUME CONTROL SOLENOID VALVE POWER SUPPLY CIRCUIT

1. Turn ignition switch OFF.
2. Disconnect EVAP canister purge volume control solenoid valve (1) harness connector.
- EVAP canister port (2)
3. Turn ignition switch ON.

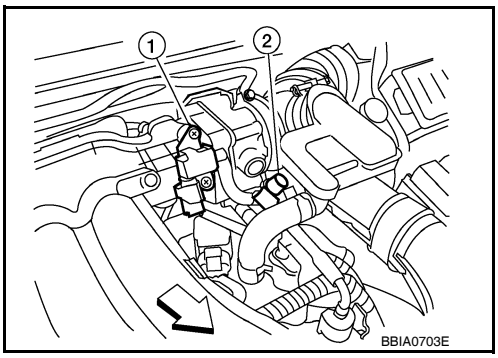

4. Check voltage between EVAP canister purge volume control solenoid valve terminal 1 and ground with CONSULT-III or tester.

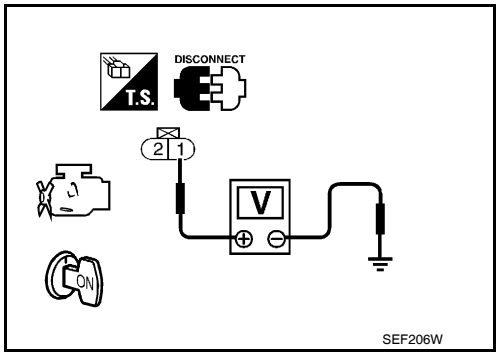

Voltage: Battery voltage

OK or NG

OK >> GO TO 3.
NG >> GO TO 2.

2. DETECT MALFUNCTIONING PART

Check the following.
- Harness connectors E17, F10
- Harness for open or short between EVAP canister purge volume control solenoid valve and IPDM E/R
- Harness for open or short between EVAP canister purge volume control solenoid valve and ECM

>> Repair open circuit or short to ground or short to power in harness or connectors.

3. CHECK EVAP CANISTER PURGE VOLUME CONTROL SOLENOID VALVE OUTPUT SIGNAL CIRCUIT FOR OPEN AND SHORT

1. Turn ignition switch OFF.
2. Disconnect ECM harness connector.
3. Check harness continuity between ECM terminal 9 and EVAP canister purge volume control solenoid valve terminal 2. Refer to Wiring Diagram.

Continuity should exist.

4. Also check harness for short to ground and short to power.

OK or NG

OK (With CONSULT-III)>>GO TO 4.
OK (Without CONSULT-III)>>GO TO 5.
NG >> Repair open circuit or short to ground or short to power in harness or connectors.

4. CHECK EVAP CANISTER PURGE VOLUME CONTROL SOLENOID VALVE OPERATION

With CONSULT-III

1. Reconnect all harness connectors disconnected.
2. Start engine.
3. Perform “PURG VOL CONT/V” in “ACTIVE TEST” mode with CONSULT-III. Check that engine speed varies according to the valve opening.

OK or NG

OK >> GO TO 6.
NG >> GO TO 5.

5. CHECK EVAP CANISTER PURGE VOLUME CONTROL SOLENOID VALVE

Refer to EC-912, "Component Inspection".

OK or NG

OK >> GO TO 6.
NG >> Replace EVAP canister purge volume control solenoid valve.

6. CHECK INTERMITTENT INCIDENT

Refer to EC-706.

>> **INSPECTION END**

Component Inspection

INFOID:0000000005285441

EVAP CANISTER PURGE VOLUME CONTROL SOLENOID VALVE

WITH CONSULT-III

Check air passage continuity of EVAP canister purge volume control solenoid valve under the following conditions.

Condition (PURG VOL CONT/V value)	Air passage continuity between A and B
100%	Yes
0%	No

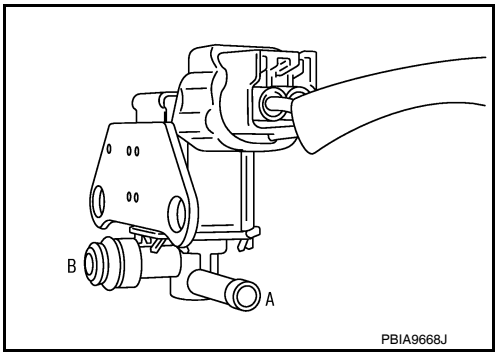

WITHOUT CONSULT-III

Check air passage continuity of EVAP canister purge volume control solenoid valve under the following conditions.

Condition	Air passage continuity between A and B
12 V direct current supply between terminals 1 and 2	Yes
No supply	No

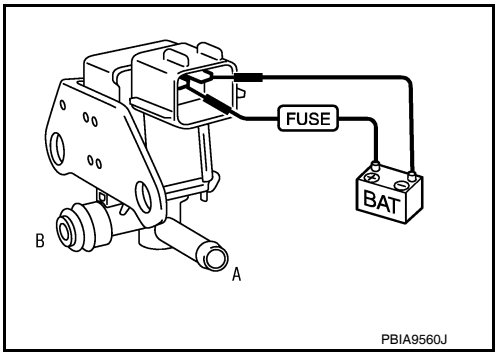

Removal and Installation

INFOID:0000000005285442

EVAP CANISTER PURGE VOLUME CONTROL SOLENOID VALVE

Refer to EM-18.

DTC P0447 EVAP CANISTER VENT CONTROL VALVE

Component Description

INFOID:0000000005285443

The EVAP canister vent control valve (3) is located on the EVAP canister (2) and is used to seal the canister vent.
This solenoid valve responds to signals from the ECM. When the ECM sends an ON signal, the coil in the solenoid valve is energized. A plunger will then move to seal the canister vent. The ability to seal the vent is necessary for the on board diagnosis of other evaporative emission control system components.
This solenoid valve is used only for diagnosis, and usually remains opened.
When the vent is closed, under normal purge conditions, the evaporative emission control system is depressurized and allows EVAP control system diagnoses.

- This illustration is a view from under vehicle
- EVAP control system pressure sensor (1)

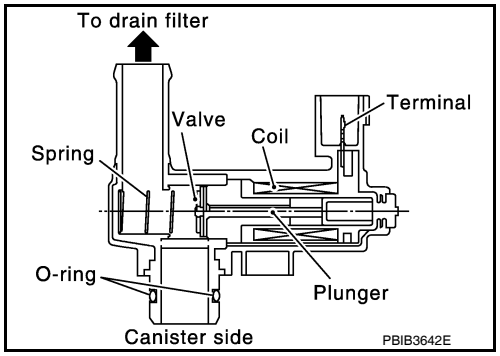

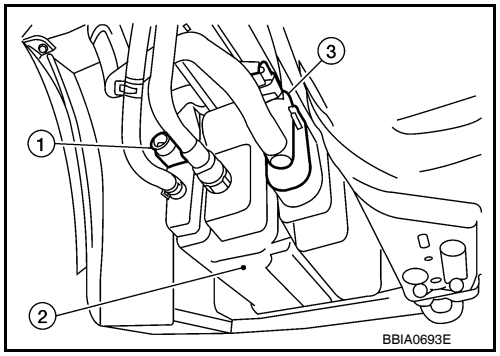

CONSULT-III Reference Value in Data Monitor Mode

INFOID:0000000005285444

Specification data are reference values.

Monitor item	Condition	Specification
VENT CONT/V	• Ignition switch: ON	OFF

On Board Diagnosis Logic

INFOID:0000000005285445

DTC No.	Trouble diagnosis name	DTC detecting condition	Possible cause
P0447 0447	EVAP canister vent control valve circuit open	An improper voltage signal is sent to ECM through EVAP canister vent control valve.	• Harness or connectors (EVAP canister vent control valve circuit is open or shorted.) • EVAP canister vent control valve • Drain filter

DTC Confirmation Procedure

INFOID:0000000005285446

NOTE:
If DTC Confirmation Procedure has been previously conducted, always turn ignition switch OFF and wait at least 10 seconds before conducting the next test.
TESTING CONDITION:
Before performing the following procedure, confirm battery voltage is more than 11 V at idle.

1. Start engine and wait at least 8 seconds.
2. Check 1st trip DTC.
3. If 1st trip DTC is detected, go to EC-915, "Diagnosis Procedure".

Wiring Diagram

INFOID:0000000005285447

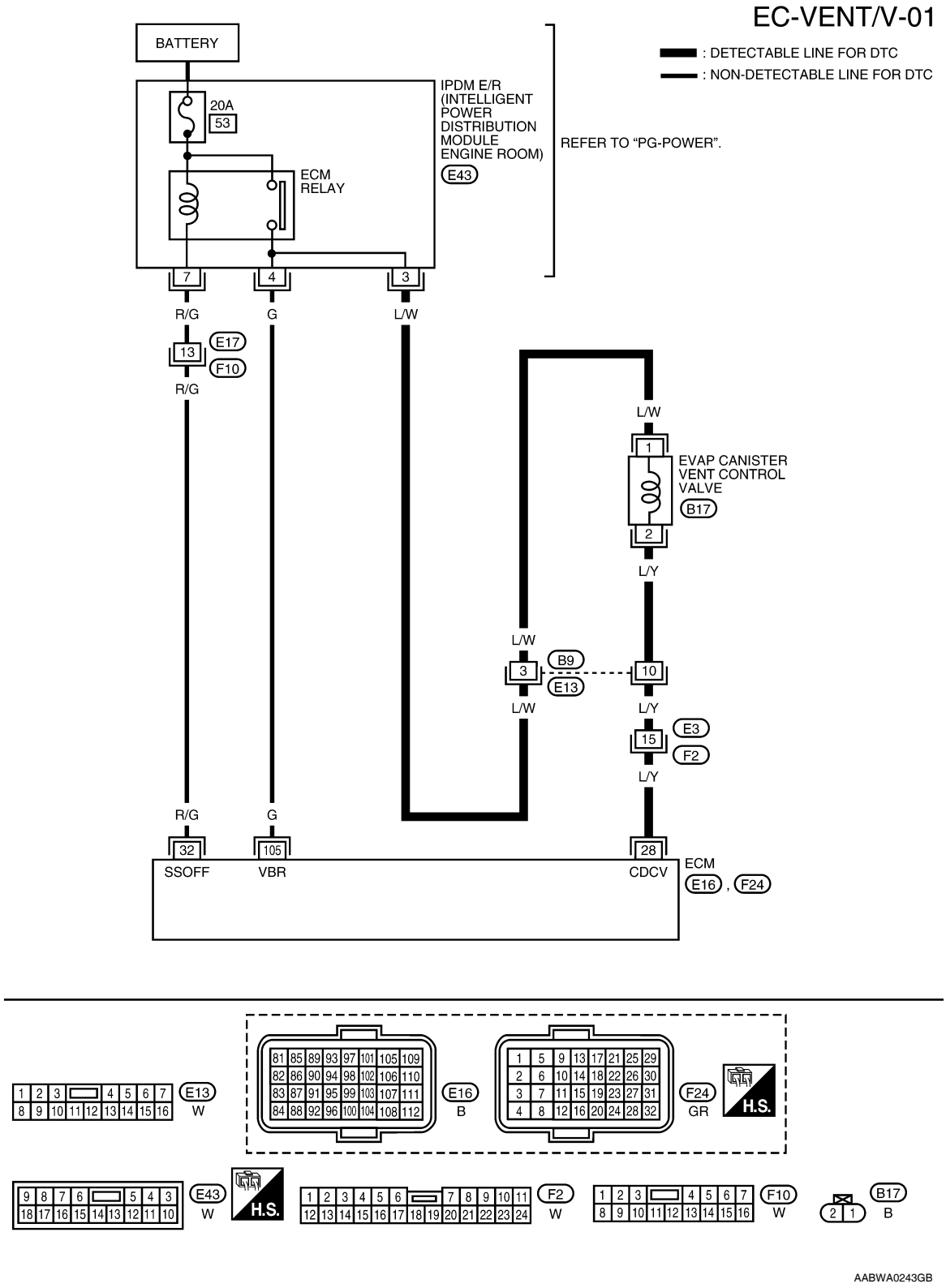

Specification data are reference values and are measured between each terminal and ground.

CAUTION:

Do not use ECM ground terminals when measuring input/output voltage. Doing so may result in damage to the ECM's transistor. Use a ground other than ECM terminals, such as the ground.

TERMINAL NO.	WIRE COLOR	ITEM	CONDITION	DATA (DC Voltage)
28	L/Y	EVAP canister vent control valve	**[Ignition switch: ON]**	BATTERY VOLTAGE (11 - 14 V)
32	R/G	ECM relay (Self shut-off)	**[Engine is running]** **[Ignition switch: OFF]** • For a few seconds after turning ignition switch OFF	0 - 1.0 V
			[Ignition switch: OFF] • More than a few seconds after turning ignition switch OFF	BATTERY VOLTAGE (11 - 14 V)
105	G	Power supply for ECM	**[Ignition switch: ON]**	BATTERY VOLTAGE (11 - 14 V)

Diagnosis Procedure

INFOID:0000000005285448

1. INSPECTION START

1. Do you have CONSULT-III?

Yes or No

Yes >> GO TO 2.
No >> GO TO 3.

2. CHECK EVAP CANISTER VENT CONTROL VALVE CIRCUIT

With CONSULT-III

1. Turn ignition switch OFF and then turn ON.
2. Select “VENT CONTROL/V” in “ACTIVE TEST” mode with CONSULT-III.
3. Touch “ON/OFF” on CONSULT-III screen.
4. Check for operating sound of the valve.

Clicking noise should be heard.

OK or NG

OK >> GO TO 8.
NG >> GO TO 3.

3. CHECK EVAP CANISTER VENT CONTROL VALVE POWER SUPPLY CIRCUIT

1. Turn ignition switch OFF.
2. Disconnect EVAP canister vent control valve (3) harness connector.
- This illustration is a view from under vehicle
- EVAP control system pressure sensor (1)
- EVAP canister (2)
3. Turn ignition switch ON.

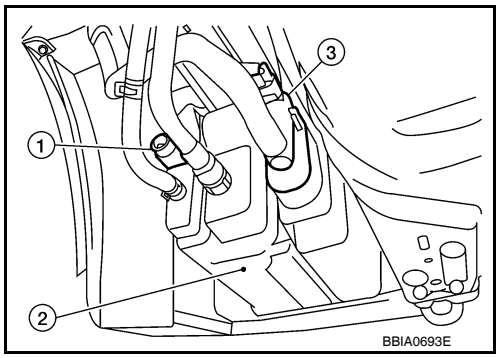

4. Check voltage between EVAP canister vent control valve terminal 1 and ground with CONSULT-III or tester.

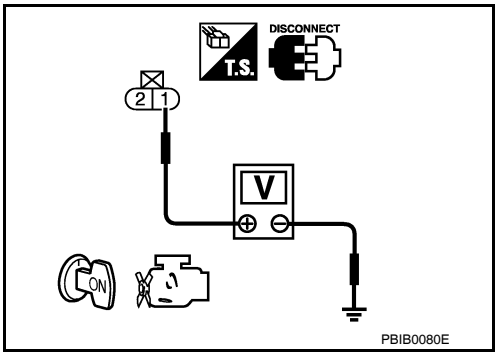

Voltage: Battery voltage

OK or NG

OK >> GO TO 5.
NG >> GO TO 4.

4. DETECT MALFUNCTIONING PART

Check the following.
- Harness connectors B9, E13
- Harness for open or short between EVAP canister vent control valve and IPDM E/R

>> Repair open circuit or short to ground or short to power in harness or connectors.

5. CHECK EVAP CANISTER VENT CONTROL VALVE OUTPUT SIGNAL CIRCUIT FOR OPEN AND SHORT

1. Turn ignition switch OFF.
2. Disconnect ECM harness connector.
3. Check harness continuity between ECM terminal 28 and EVAP canister vent control valve terminal 2. Refer to Wiring Diagram.

Continuity should exist.

4. Also check harness for short to ground and short to power.

OK or NG

OK >> GO TO 7.
NG >> GO TO 6.

6. DETECT MALFUNCTIONING PART

Check the following.
- Harness connectors E3, F2
- Harness for open or short between EVAP canister vent control valve and ECM

>> Repair open circuit or short to ground or short to power in harness or connectors.

7. CHECK RUBBER TUBE FOR CLOGGING

1. Disconnect rubber tube connected to EVAP canister vent control valve.
2. Check the rubber tube for clogging.

OK or NG

OK >> GO TO 8.
NG >> Clean the rubber tube using an air blower.

8. CHECK DRAIN FILTER

Refer to EC-891, "Component Inspection".

OK or NG

OK >> GO TO 9.
NG >> Replace drain filter.

9. CHECK EVAP CANISTER VENT CONTROL VALVE

Refer to EC-917, "Component Inspection".

OK or NG

OK >> GO TO 10.
NG >> Replace EVAP canister vent control valve.

10. CHECK INTERMITTENT INCIDENT

Refer to EC-706.

>> **INSPECTION END**

Component Inspection

INFOID:0000000005285449

EVAP CANISTER VENT CONTROL VALVE

WITH CONSULT-III

1. Remove EVAP canister vent control valve from EVAP canister.
2. Check portion **B** of EVAP canister vent control valve for being rusted.
   If NG, replace EVAP canister vent control valve.
   If OK, go to next step.
3. Reconnect harness connectors disconnected.
4. Turn ignition switch ON.

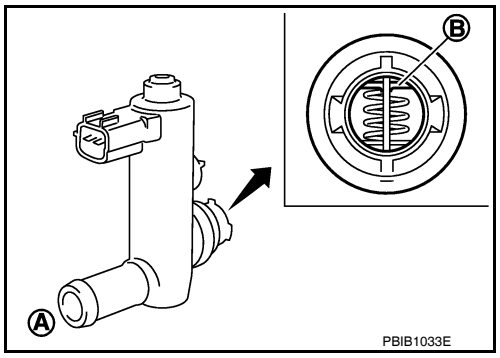

5. Perform “VENT CONTROL/V” in “ACTIVE TEST” mode.
6. Check air passage continuity and operation delay time.
   Make sure new O-ring is installed properly.

Condition VENT CONTROL/V	Air passage continuity between A and B
ON	No
OFF	Yes

Operation takes less than 1 second.
If NG, go to next step.

7. Clean the air passage (Portion **A** to **B**) of EVAP canister vent control valve using an air blower.
8. Perform step 6 again.
   If NG, replace EVAP canister vent control valve.

WITHOUT CONSULT-III

1. Remove EVAP canister vent control valve from EVAP canister.
2. Check portion **B** of EVAP canister vent control valve for being rusted.

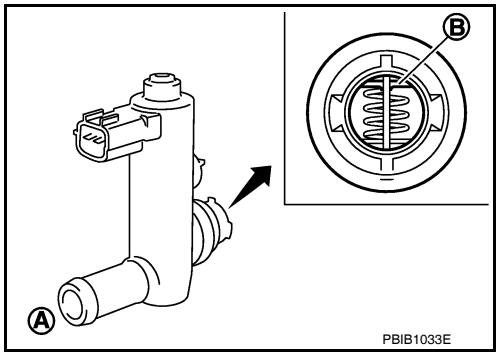

3. Check air passage continuity and operation delay time under the following conditions.
   Make sure new O-ring is installed properly.

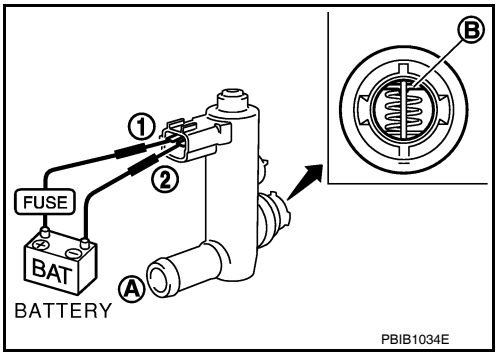

Condition	Air passage continuity between A and B
12 V direct current supply between terminals 1 and 2	No
OFF	Yes

   Operation takes less than 1 second.
   If NG, go to next step.
4. Clean the air passage (Portion **A** to **B**) of EVAP canister vent control valve using an air blower.
5. Perform step 3 again.
   If NG, replace EVAP canister vent control valve.

DTC P0448 EVAP CANISTER VENT CONTROL VALVE

Component Description

INFOID:0000000005285450

The EVAP canister vent control valve (3) is located on the EVAP canister (2) and is used to seal the canister vent.
This solenoid valve responds to signals from the ECM. When the ECM sends an ON signal, the coil in the solenoid valve is energized. A plunger will then move to seal the canister vent. The ability to seal the vent is necessary for the on board diagnosis of other evaporative emission control system components.
This solenoid valve is used only for diagnosis, and usually remains opened.
When the vent is closed, under normal purge conditions, the evaporative emission control system is depressurized and allows EVAP control system diagnoses.

- This illustration is a view from under vehicle
- EVAP control system pressure sensor (1)

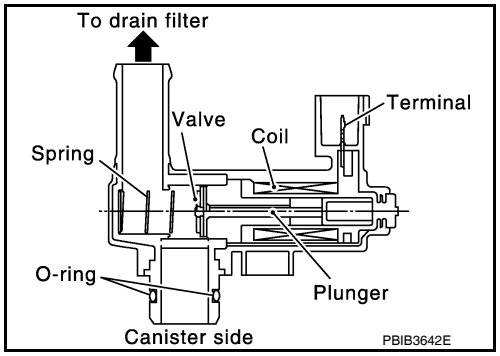

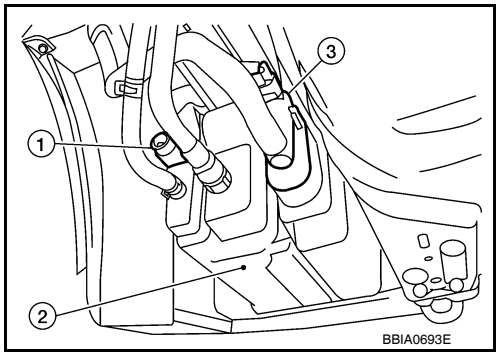

CONSULT-III Reference Value in Data Monitor Mode

INFOID:0000000005285451

Specification data are reference values.

Monitor item	Condition	Specification
VENT CONT/V	• Ignition switch: ON	OFF

On Board Diagnosis Logic

INFOID:0000000005285452

DTC No.	Trouble diagnosis name	DTC detecting condition	Possible cause
P0448 0448	EVAP canister vent control valve close	EVAP canister vent control valve remains closed under specified driving conditions.	• EVAP canister vent control valve • EVAP control system pressure sensor and the circuit • Blocked rubber tube to EVAP canister vent control valve • EVAP canister is saturated with water • Drain filter

DTC Confirmation Procedure

INFOID:0000000005285453

CAUTION:
Always drive vehicle at a safe speed.
NOTE:
If DTC Confirmation Procedure has been previously conducted, always turn ignition switch OFF and wait at least 10 seconds before conducting the next test.

WITH CONSULT-III

1. Turn ignition switch ON and wait at least 5 seconds.
2. Turn ignition switch OFF and wait at least 10 seconds.
3. Turn ignition switch ON and select “DATA MONITOR” mode with CONSULT-III.

4. Start engine and let it idle for at least 1 minute.
5. Repeat next procedures three times.

a. Increase the engine speed up to 3,000 to 3,500 rpm and keep it for 2 minutes and 50 seconds to 3 minutes.
Never exceed 3 minutes.

b. Fully released accelerator pedal and keep engine idle for about 5 seconds.

6. Check 1st trip DTC.
7. If 1st trip DTC is detected, go to EC-922, "Diagnosis Procedure".
If 1st trip DTC is not detected, go to the next step.
8. Repeat next procedure 20 times.

a. Quickly increase the engine speed up to 4,000 to 4,500 rpm or more and keep it for 25 to 30 seconds.

b. Fully released accelerator pedal and keep engine idle for at least 35 seconds.

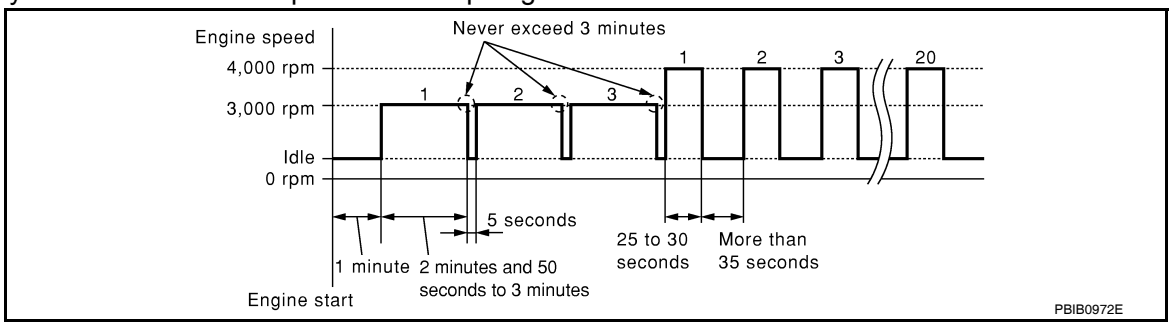

9. Check 1st trip DTC.
10. If 1st trip DTC is detected, go to EC-922, "Diagnosis Procedure".

WITH GST

Follow the procedure “WITH CONSULT-III” above.

Wiring Diagram

INFOID:0000000005285454

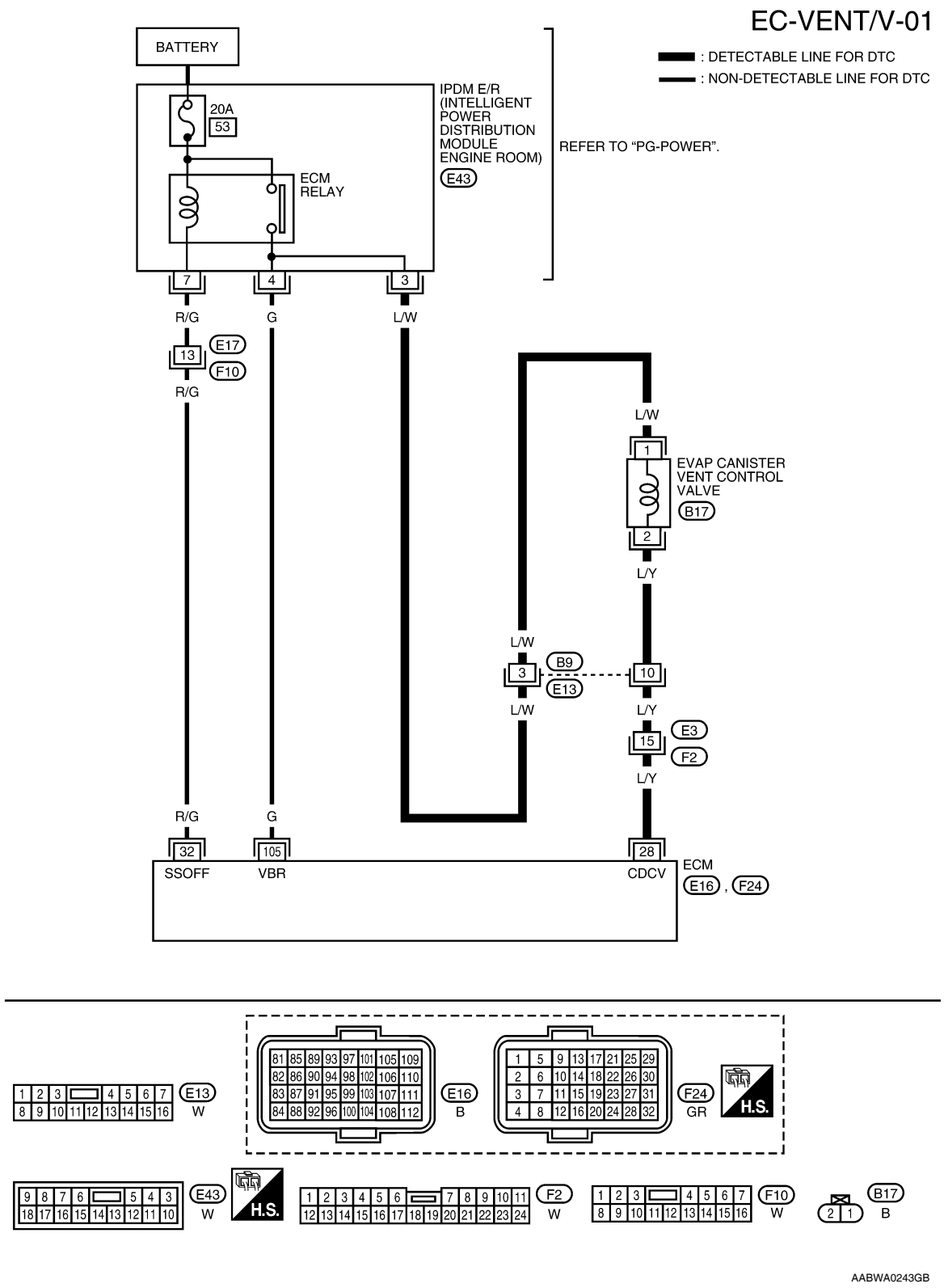

Specification data are reference values and are measured between each terminal and ground.

CAUTION:

Do not use ECM ground terminals when measuring input/output voltage. Doing so may result in damage to the ECM's transistor. Use a ground other than ECM terminals, such as the ground.

TERMINAL NO.	WIRE COLOR	ITEM	CONDITION	DATA (DC Voltage)
28	L/Y	EVAP canister vent control valve	**[Ignition switch: ON]**	BATTERY VOLTAGE (11 - 14 V)
32	R/G	ECM relay (Self shut-off)	**[Engine is running]** **[Ignition switch: OFF]** • For a few seconds after turning ignition switch OFF	0 - 1.0 V
			[Ignition switch: OFF] • More than a few seconds after turning ignition switch OFF	BATTERY VOLTAGE (11 - 14 V)
105	G	Power supply for ECM	**[Ignition switch: ON]**	BATTERY VOLTAGE (11 - 14 V)

Diagnosis Procedure

INFOID:0000000005285455

1. CHECK RUBBER TUBE

1. Turn ignition switch OFF.
2. Disconnect rubber tube connected to EVAP canister vent control valve (3).
3. Check the rubber tube for clogging.

- This illustration is a view from under vehicle
- EVAP control system pressure sensor (1)
- EVAP canister (2)

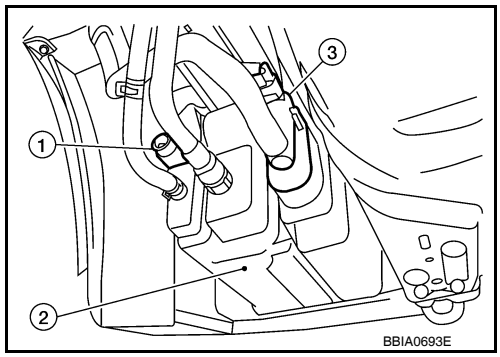

OK or NG

OK >> GO TO 2.
NG >> Clean rubber tube using an air blower.

2. CHECK DRAIN FILTER

Refer to EC-891, "Component Inspection".

OK or NG

OK >> GO TO 3.
NG >> Replace drain filter.

3. CHECK EVAP CANISTER VENT CONTROL VALVE

Refer to EC-923, "Component Inspection".

OK or NG

OK >> GO TO 4.
NG >> Replace EVAP canister vent control valve.

4. CHECK IF EVAP CANISTER SATURATED WITH WATER

1. Remove EVAP canister with EVAP canister vent control valve attached.
2. Does water drain from the EVAP canister?

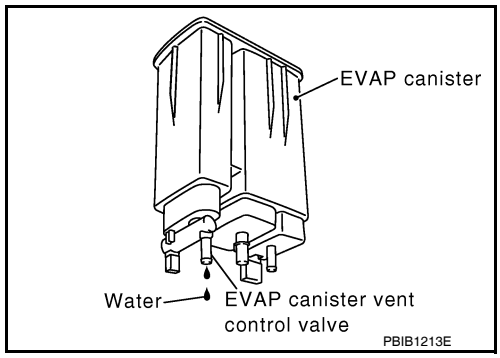

Yes >> GO TO 5.
No >> GO TO 7.

5. CHECK EVAP CANISTER

Weigh the EVAP canister with the EVAP canister vent control valve and EVAP control system pressure sensor attached.

The weight should be less than 1.9 kg (4.2 lb).

OK or NG

OK >> GO TO 7.
NG >> GO TO 6.

6. DETECT MALFUNCTIONING PART

Check the following.
- EVAP canister for damage
- EVAP hose between EVAP canister and vehicle frame for clogging or poor connection

>> Repair hose or replace EVAP canister.

7. CHECK EVAP CONTROL SYSTEM PRESSURE SENSOR CONNECTOR

1. Disconnect EVAP control system pressure sensor (1) harness connector.
- This illustration is a view from under vehicle
- EVAP canister (2)
- EVAP canister vent control valve (3)
2. Check connectors for water.

Water should not exist.

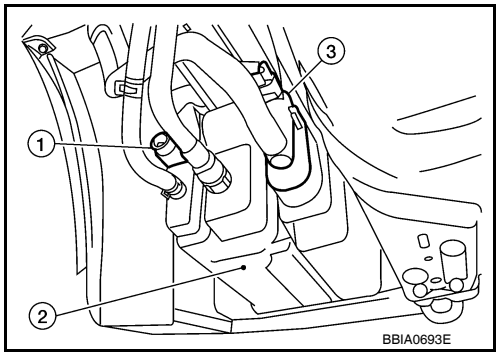

OK or NG

OK >> GO TO 8.
NG >> Replace EVAP control system pressure sensor.

8. CHECK EVAP CONTROL SYSTEM PRESSURE SENSOR

Refer to EC-942, "Component Inspection".

OK or NG

OK >> GO TO 9.
NG >> Replace EVAP control system pressure sensor.

9. CHECK INTERMITTENT INCIDENT

Refer to EC-706.

>> **INSPECTION END**

Component Inspection

INFOID:0000000005285456

EVAP CANISTER VENT CONTROL VALVE

WITH CONSULT-III

1. Remove EVAP canister vent control valve from EVAP canister.

2. Check portion **B** of EVAP canister vent control valve for being rusted.
   If NG, replace EVAP canister vent control valve.
   If OK, go to next step.
3. Reconnect harness connectors disconnected.
4. Turn ignition switch ON.

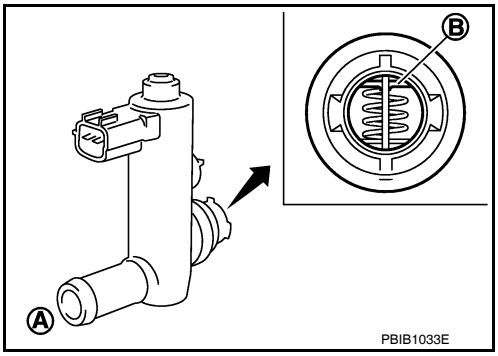

5. Perform “VENT CONTROL/V” in “ACTIVE TEST” mode.
6. Check air passage continuity and operation delay time.
   Make sure new O-ring is installed properly.

Condition VENT CONTROL/V	Air passage continuity between A and B
ON	No
OFF	Yes

Operation takes less than 1 second.
If NG, go to next step.

7. Clean the air passage (Portion **A** to **B**) of EVAP canister vent control valve using an air blower.
8. Perform step 6 again.
   If NG, replace EVAP canister vent control valve.

WITHOUT CONSULT-III

1. Remove EVAP canister vent control valve from EVAP canister.
2. Check portion **B** of EVAP canister vent control valve for being rusted.

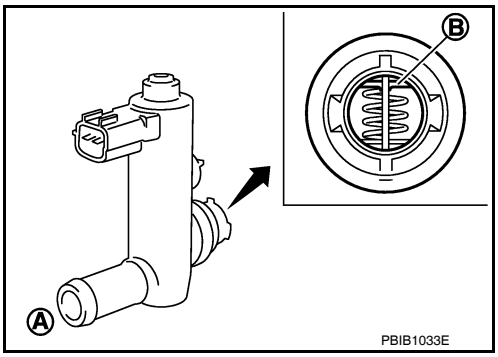

3. Check air passage continuity and operation delay time under the following conditions.
   Make sure new O-ring is installed properly.

Condition	Air passage continuity between A and B
12 V direct current supply between terminals 1 and 2	No
OFF	Yes

Operation takes less than 1 second.
If NG, go to next step.

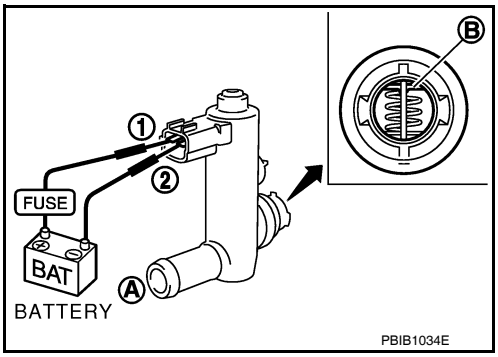

4. Clean the air passage (Portion **A** to **B**) of EVAP canister vent control valve using an air blower.
5. Perform step 3 again.
   If NG, replace EVAP canister vent control valve.

DTC P0451 EVAP CONTROL SYSTEM PRESSURE SENSOR

Component Description

INFOID:0000000005285457

The EVAP control system pressure sensor (1) detects pressure in the purge line. The sensor output voltage to the ECM increases as pressure increases.
- This illustration is a view from under vehicle
- EVAP canister (2)
- EVAP canister vent control valve (3)

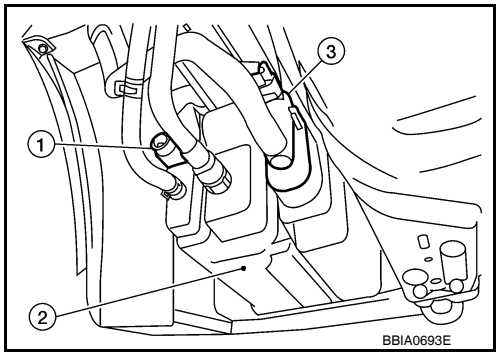

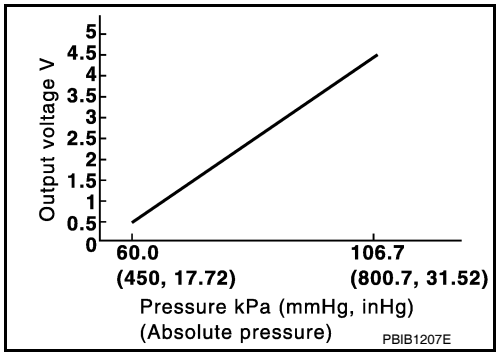

CONSULT-III Reference Value in Data Monitor Mode

INFOID:0000000005285458

Specification data are reference values.

Monitor item	Condition	Specification
EVAP SYS PRES	• Ignition switch: ON	Approx. 1.8 - 4.8 V

On Board Diagnosis Logic

INFOID:0000000005285459

DTC No.	Trouble diagnosis name	DTC detecting condition	Possible cause
P0451 0451	EVAP control system pressure sensor performance	ECM detects a sloshing signal from the EVAP control system pressure sensor	• Harness or connectors [Crankshaft position sensor (POS) circuit is shorted.] (Accelerator pedal position sensor circuit is shorted.) (Refrigerant pressure sensor circuit is shorted.) • EVAP control system pressure sensor • Crankshaft position sensor (POS) • Accelerator pedal position sensor • Refrigerant pressure sensor

DTC Confirmation Procedure

INFOID:0000000005285460

NOTE:
If DTC Confirmation Procedure has been previously conducted, always turn ignition switch OFF and wait at least 10 seconds before conducting the next test.

1. Start engine and wait at least 40 seconds.
   NOTE:
   Do not depress accelerator pedal even slightly.

2. Check 1st trip DTC.
3. If 1st trip DTC is detected, go to EC-926, "Diagnosis Procedure".

Diagnosis Procedure

INFOID:0000000005285461

1. CHECK GROUND CONNECTIONS

1. Turn ignition switch OFF.
2. Loosen and retighten ground screws on the body.
   Refer to EC-711, "Ground Inspection".

- ⇦ : Vehicle front
- Body ground (1)

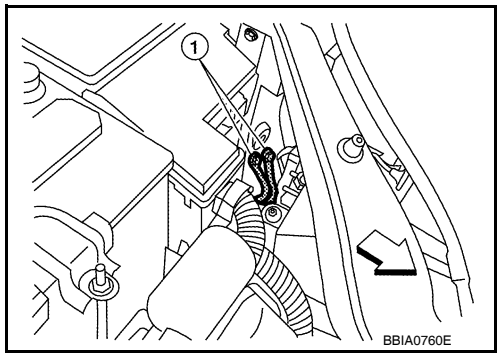

OK or NG

OK >> GO TO 2.
NG >> Repair or replace ground connections.

2. CHECK EVAP CONTROL SYSTEM PRESSURE SENSOR CONNECTOR FOR WATER

1. Disconnect EVAP control system pressure sensor (1) harness connector.

- This illustration is a view from under vehicle
- EVAP canister (2)
- EVAP canister vent control valve (3)

2. Check sensor harness connector for water.

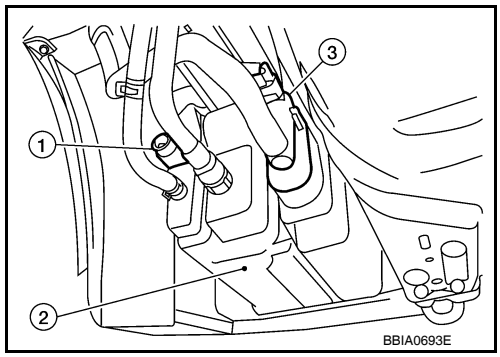

Water should not exist.

OK or NG

OK >> GO TO 3.
NG >> Repair or replace harness connector.

3. CHECK EVAP CONTROL SYSTEM PRESSURE SENSOR

Refer to EC-927, "Component Inspection".

OK or NG

OK >> GO TO 4.
NG >> Replace EVAP control system pressure sensor.

4. CHECK POWER SUPPLY CIRCUITS

Check harness for short to power and short to ground, between the following terminals.

ECM terminal	Sensor terminal	Reference Wiring Diagram
74	Refrigerant pressure sensor terminal 3	EC-1109, "Wiring Diagram"
75	Crankshaft position sensor (POS) terminal 1	EC-871, "Wiring Diagram"
76	EVAP control system pressure sensor terminal 3	EC-930, "Wiring Diagram"
102	APP sensor terminal 5	EC-1052, "Wiring Diagram"

OK or NG

OK >> GO TO 5.
NG >> Repair short to ground or short to power in harness or connectors.

5. CHECK REFRIGERANT PRESSURE SENSOR

Refer to MTC-27.

OK or NG

OK >> GO TO 6.
NG >> Replace refrigerant pressure sensor.

6. CHECK CRANKSHAFT POSITION SENSOR (POS)

Refer to EC-934, "Component Inspection".

OK or NG

OK >> GO TO 7.
NG >> Replace crankshaft position sensor (POS).

7. CHECK APP SENSOR

Refer to EC-1055, "Component Inspection".

OK or NG

OK >> GO TO 9.
NG >> GO TO 8.

8. REPLACE ACCELERATOR PEDAL ASSEMBLY

1. Replace accelerator pedal assembly.
2. Perform EC-654, "Accelerator Pedal Released Position Learning".
3. Perform EC-654, "Throttle Valve Closed Position Learning".
4. Perform EC-654, "Idle Air Volume Learning".

>> **INSPECTION END**

9. CHECK INTERMITTENT INCIDENT

Refer to EC-706.
For wiring diagram, refer to EC-930, "Wiring Diagram".

>> **INSPECTION END**

Component Inspection

INFOID:0000000005285462

EVAP CONTROL SYSTEM PRESSURE SENSOR

1. Remove EVAP control system pressure sensor with its harness connector connected from EVAP canister. **Always replace O-ring with a new one.**
2. Install a vacuum pump to EVAP control system pressure sensor.
3. Turn ignition switch ON and check output voltage between ECM terminal 42 and ground under the following conditions.

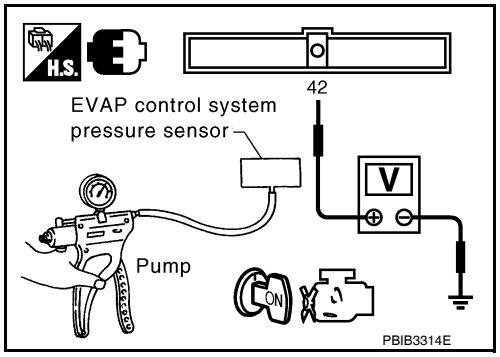

Applied vacuum kPa (mmHg, inHg)	Voltage
Not applied	1.8 - 4.8 V
-26.7 (-200, -7.87)	2.1 to 2.5 V lower than above value

CAUTION:
- **Always calibrate the vacuum pump gauge when using it.**
- **Do not apply below -93.3 kPa (-700 mmHg, -27.56 inHg) or pressure over 101.3 kPa (760 mmHg, 29.92 inHg).**

4. If NG, replace EVAP control system pressure sensor.

DTC P0452 EVAP CONTROL SYSTEM PRESSURE SENSOR

Component Description

INFOID:0000000005285463

The EVAP control system pressure sensor (1) detects pressure in the purge line. The sensor output voltage to the ECM increases as pressure increases.
- This illustration is a view from under vehicle
- EVAP canister (2)
- EVAP canister vent control valve (3)

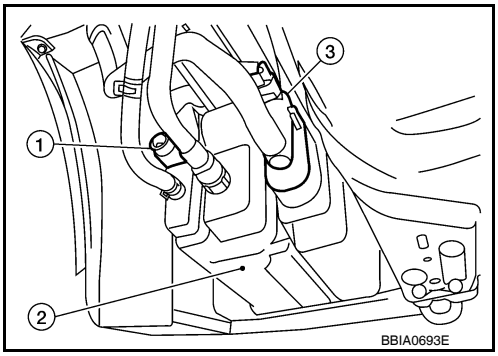

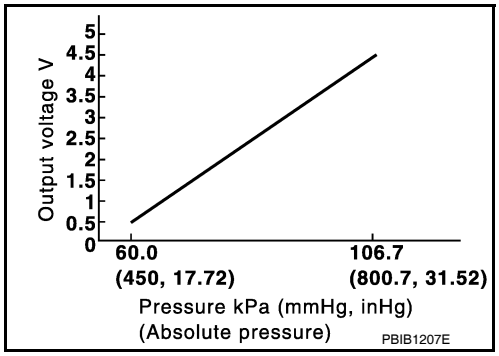

CONSULT-III Reference Value in Data Monitor Mode

INFOID:0000000005285464

Specification data are reference values.

Monitor item	Condition	Specification
EVAP SYS PRES	• Ignition switch: ON	Approx. 1.8 - 4.8 V

On Board Diagnosis Logic

INFOID:0000000005285465

DTC No.	Trouble diagnosis name	DTC detecting condition	Possible cause
P0452 0452	EVAP control system pressure sensor low input	An excessively low voltage from the sensor is sent to ECM.	• Harness or connectors (EVAP control system pressure sensor circuit is open or sorted.) [Crankshaft position sensor (POS) circuit is shorted.] (Accelerator pedal position sensor circuit is shorted.) (Refrigerant pressure sensor circuit is shorted.) • EVAP control system pressure sensor • Crankshaft position sensor (POS) • Accelerator pedal position sensor • Refrigerant pressure sensor

DTC Confirmation Procedure

INFOID:0000000005285466

NOTE:
If DTC Confirmation Procedure has been previously conducted, always turn ignition switch OFF and wait at least 10 seconds before conducting the next test.
TESTING CONDITION:
Always perform test at a temperature of 5°C (41°F) or more.

WITH CONSULT-III

1. Start engine and warm it up to normal operating temperature.
2. Turn ignition switch OFF and wait at least 10 seconds.
3. Turn ignition switch ON.
4. Select “DATA MONITOR” mode with CONSULT-III.
5. Make sure that “FUEL T/TMP SE” is more than 0°C (32°F).
6. Start engine and wait at least 20 seconds.
7. Check 1st trip DTC.
   If 1st trip DTC is detected, go to EC-931, "Diagnosis Procedure".

WITH GST

1. Start engine and warm it up to normal operating temperature.
2. Check that voltage between ECM terminal 43 (Fuel tank temperature sensor signal) and ground is less than 4.2 V.
3. Turn ignition switch OFF and wait at least 10 seconds.
4. Start engine and wait at least 20 seconds.
5. Select Service $07 with GST.
   If 1st trip DTC is detected, go to EC-931, "Diagnosis Procedure".

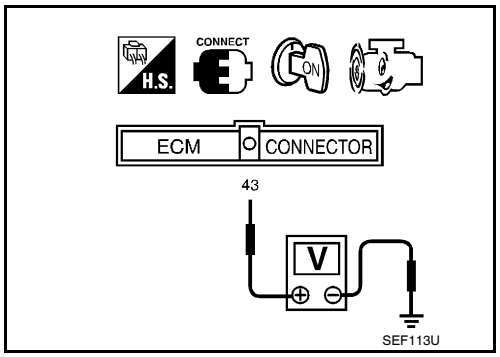

Wiring Diagram

INFOID:0000000005285467

EC-PRE/SE-01

: DETECTABLE LINE FOR DTC
: NON-DETECTABLE LINE FOR DTC

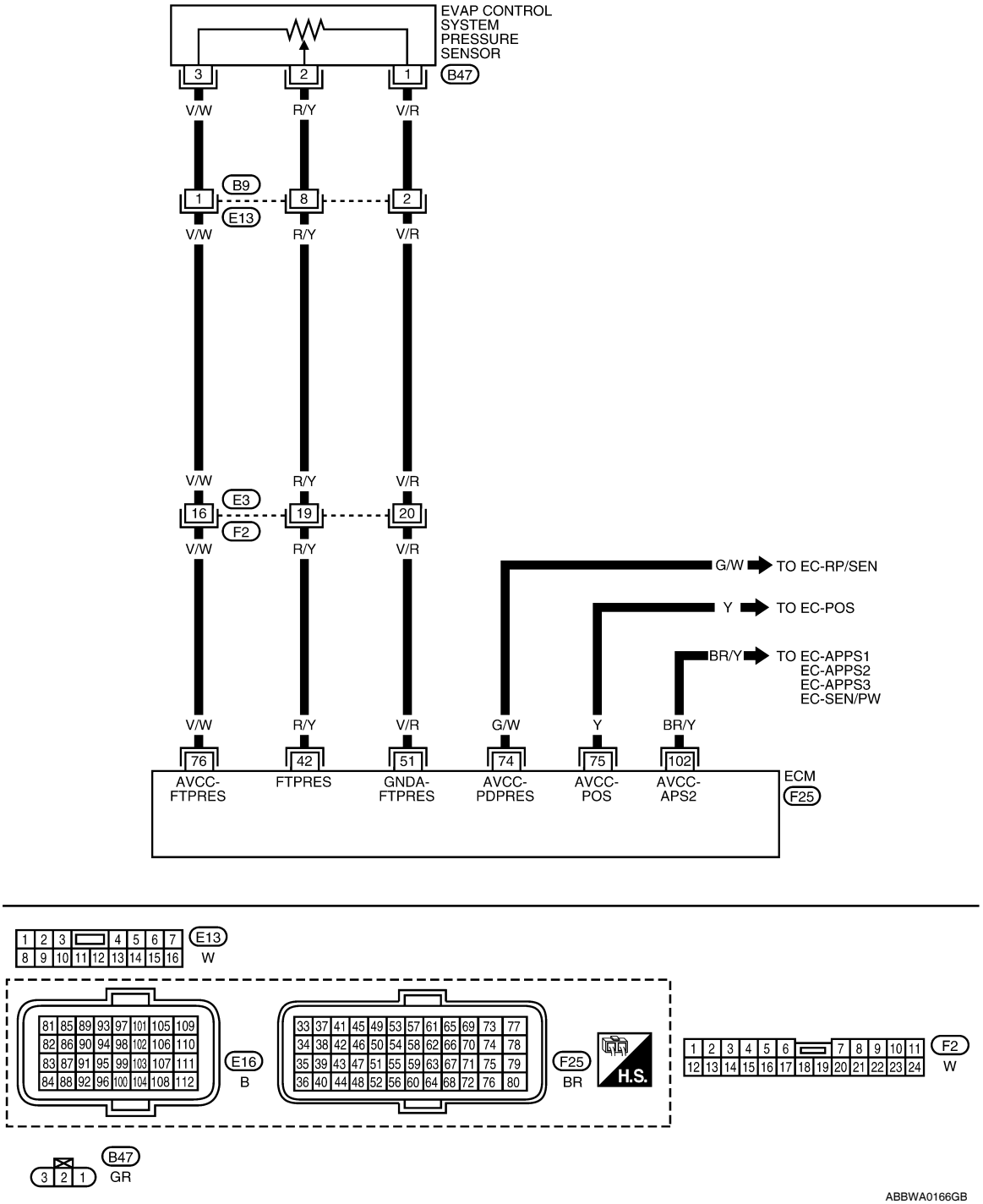

Specification data are reference values and are measured between each terminal and ground.

CAUTION:

Do not use ECM ground terminals when measuring input/output voltage. Doing so may result in damage to the ECM's transistor. Use a ground other than ECM terminals, such as the ground.

TERMINAL NO.	WIRE COLOR	ITEM	CONDITION	DATA (DC Voltage)
42	R/Y	EVAP control system pressure sensor	**[Ignition switch: ON]**	Approximately 1.8 - 4.8 V
51	V/R	Sensor ground (EVAP control system pressure sensor)	**[Engine is running]** • **Warm-up condition** • Idle speed	Approximately 0 V
74	G/W	Sensor power supply (Refrigerant pressure sensor)	**[Ignition switch: ON]**	Approximately 5 V
75	Y	Sensor power supply [Crankshaft position sensor (POS)]	**[Ignition switch: ON]**	Approximately 5 V
76	V/W	EVAP control system pressure sensor power supply	**[Ignition switch: ON]**	Approximately 5 V
102	BR/Y	Sensor power supply (APP sensor 2)	**[Ignition switch: ON]**	Approximately 5 V

Diagnosis Procedure

INFOID:0000000005285468

1. CHECK GROUND CONNECTIONS

1. Turn ignition switch OFF.
2. Loosen and retighten ground screws on the body.
   Refer to EC-711, "Ground Inspection".

- ⇦ : Vehicle front
- Body ground (1)

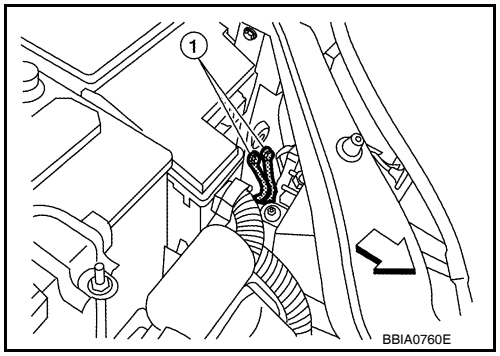

OK or NG

OK >> GO TO 2.
NG >> Repair or replace ground connections.

2. CHECK CONNECTOR

1. Disconnect EVAP control system pressure sensor (1) harness connector.

- This illustration is a view from under vehicle
- EVAP canister (2)
- EVAP canister vent control valve (3)

2. Check sensor harness connector for water.

Water should not exist.

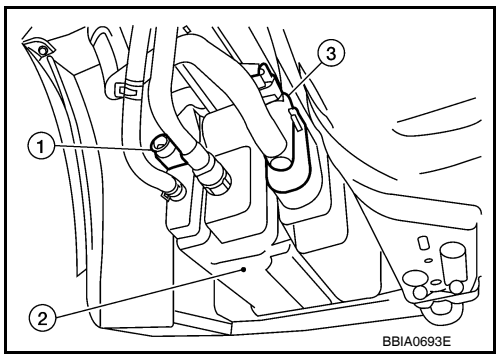

OK or NG

OK >> GO TO 3.
NG >> Repair or replace harness connector.

3. CHECK EVAP CONTROL SYSTEM PRESSURE SENSOR POWER SUPPLY CIRCUIT-I

1. Turn ignition switch ON.

2. Check voltage between EVAP control system pressure sensor terminal 3 and ground with CONSULT-III or tester.

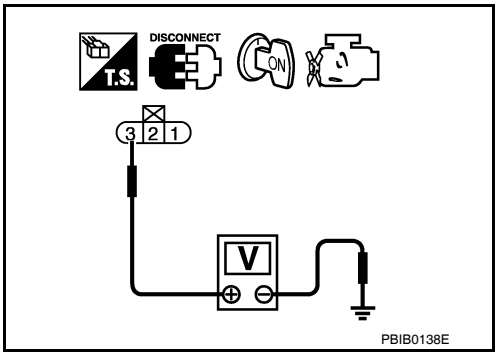

Voltage: Approximately 5 V

OK or NG

OK >> GO TO 11.
NG >> GO TO 4.

4. CHECK EVAP CONTROL SYSTEM PRESSURE SENSOR POWER SUPPLY CIRCUIT-II

1. Turn ignition switch OFF.
2. Disconnect ECM harness connector.
3. Check harness continuity between EVAP control system pressure sensor terminal 3 and ECM terminal 76. Refer to Wiring Diagram.

Continuity should exist.

OK or NG

OK >> GO TO 6.
NG >> GO TO 5.

5. DETECT MALFUNCTIONING PART

Check the following.
- Harness connectors E3, F2
- Harness connectors B9, E13
- Harness for open between EVAP control system pressure sensor and ECM

>> Repair open circuit.

6. CHECK POWER SUPPLY CIRCUITS

Check harness for short to power and short to ground between the following terminals.

ECM terminal	Sensor terminal	Reference Wiring Diagram
74	Refrigerant pressure sensor terminal 3	EC-1109, "Wiring Diagram"
75	Crankshaft position sensor (POS) terminal 1	EC-871, "Wiring Diagram"
76	EVAP control system pressure sensor terminal 3	EC-930, "Wiring Diagram"
102	APP sensor terminal 5	EC-1052, "Wiring Diagram"

OK or NG

OK >> GO TO 7.
NG >> Repair short to ground or short to power in harness or connectors.

7. CHECK REFRIGERANT PRESSURE SENSOR

Refer to MTC-27.

OK or NG

OK >> GO TO 8.
NG >> Replace refrigerant pressure sensor.

8. CHECK CRANKSHAFT POSITION SENSOR (POS)

Refer to EC-934, "Component Inspection".

OK or NG

OK >> GO TO 9.
NG >> Replace crankshaft position sensor (POS).

9. CHECK APP SENSOR

Refer to EC-1055, "Component Inspection".

OK or NG

OK >> GO TO 16.
NG >> GO TO 10.

10. REPLACE ACCELERATOR PEDAL ASSEMBLY

1. Replace accelerator pedal assembly.
2. Perform EC-654, "Accelerator Pedal Released Position Learning".
3. Perform EC-654, "Throttle Valve Closed Position Learning".
4. Perform EC-654, "Idle Air Volume Learning".

>> **INSPECTION END**

11. CHECK EVAP CONTROL SYSTEM PRESSURE SENSOR GROUND CIRCUIT FOR OPEN AND SHORT

1. Turn ignition switch OFF.
2. Disconnect ECM harness connector.
3. Check harness continuity between EVAP control system pressure sensor terminal 1 and ECM terminal 51. Refer to Wiring Diagram.

Continuity should exist.

4. Also check harness for short to ground and short to power.

OK or NG

OK >> GO TO 13.
NG >> GO TO 12.

12. DETECT MALFUNCTIONING PART

Check the following.
- Harness connectors E3, F2
- Harness connectors B9, E13
- Harness for open or short between EVAP control system pressure sensor and ECM

>> Repair open circuit or short to ground or short to power in harness or connectors.

13. CHECK EVAP CONTROL SYSTEM PRESSURE SENSOR INPUT SIGNAL CIRCUIT FOR OPEN AND SHORT

1. Check harness continuity between ECM terminal 42 and EVAP control system pressure sensor terminal 2. Refer to Wiring Diagram.

Continuity should exist.

2. Also check harness for short to ground and short to power.

OK or NG

OK >> GO TO 15.
NG >> GO TO 14.

14. DETECT MALFUNCTIONING PART

Check the following.
- Harness connectors E3, F2
- Harness connectors B9, E13
- Harness for open or short between ECM and EVAP control system pressure sensor

>> Repair open circuit or short to ground or short to power in harness or connectors.

15. CHECK EVAP CONTROL SYSTEM PRESSURE SENSOR

Refer to EC-934, "Component Inspection".

OK or NG

OK >> GO TO 16.

NG >> Replace EVAP control system pressure sensor.

16. CHECK INTERMITTENT INCIDENT

Refer to EC-706.

>> **INSPECTION END**

Component Inspection

INFOID:0000000005285469

EVAP CONTROL SYSTEM PRESSURE SENSOR

1. Remove EVAP control system pressure sensor with its harness connector connected from EVAP canister. **Always replace O-ring with a new one.**
2. Install a vacuum pump to EVAP control system pressure sensor.
3. Turn ignition switch ON and check output voltage between ECM terminal 42 and ground under the following conditions.

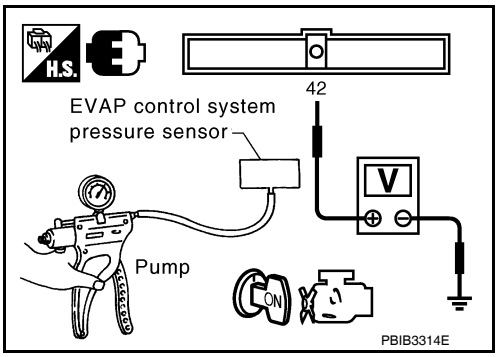

Applied vacuum kPa (mmHg, inHg)	Voltage
Not applied	1.8 - 4.8 V
-26.7 (-200, -7.87)	2.1 to 2.5 V lower than above value

CAUTION:
- **Always calibrate the vacuum pump gauge when using it.**
- **Do not apply below -93.3 kPa (-700 mmHg, -27.56 inHg) or pressure over 101.3 kPa (760 mmHg, 29.92 inHg).**

4. If NG, replace EVAP control system pressure sensor.

DTC P0453 EVAP CONTROL SYSTEM PRESSURE SENSOR

Component Description

INFOID:0000000005285470

The EVAP control system pressure sensor (1) detects pressure in the purge line. The sensor output voltage to the ECM increases as pressure increases.
- This illustration is a view from under vehicle
- EVAP canister (2)
- EVAP canister vent control valve (3)

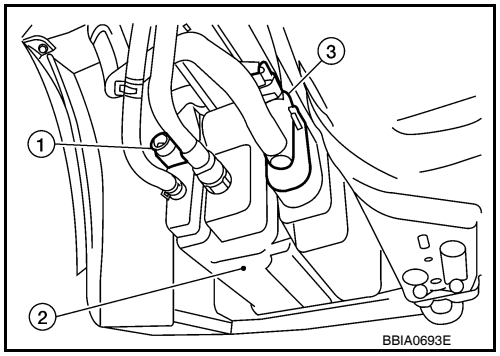

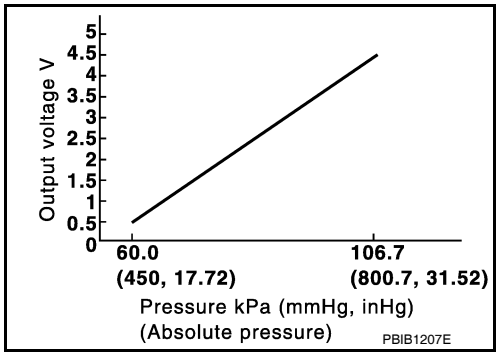

CONSULT-III Reference Value in Data Monitor Mode

INFOID:0000000005285471

Specification data are reference values.

Monitor item	Condition	Specification
EVAP SYS PRES	• Ignition switch: ON	Approx. 1.8 - 4.8 V

On Board Diagnosis Logic

INFOID:0000000005285472

DTC No.	Trouble diagnosis name	DTC detecting condition	Possible cause
P0453 0453	EVAP control system pressure sensor high input	An excessively high voltage from the sensor is sent to ECM.	• Harness or connectors (EVAP control system pressure sensor circuit is open or sorted.) [Crankshaft position sensor (POS) circuit is shorted.] (Accelerator pedal position sensor circuit is shorted.) (Refrigerant pressure sensor circuit is shorted.) • EVAP control system pressure sensor • Crankshaft position sensor (POS) • Accelerator pedal position sensor • Refrigerant pressure sensor • EVAP canister vent control valve • EVAP canister • Drain filter • Rubber hose to EVAP canister vent control valve

DTC Confirmation Procedure

INFOID:0000000005285473

NOTE:
If DTC Confirmation Procedure has been previously conducted, always turn ignition switch OFF and wait at least 10 seconds before conducting the next test.
TESTING CONDITION:
Always perform test at a temperature of 5°C (41°F) or more.

WITH CONSULT-III

1. Start engine and warm it up to normal operating temperature.
2. Turn ignition switch OFF and wait at least 10 seconds.
3. Turn ignition switch ON.
4. Select “DATA MONITOR” mode with CONSULT-III.
5. Make sure that “FUEL T/TMP SE” is more than 0°C (32°F).
6. Wait at least 10 seconds.
7. Check 1st trip DTC.
   If 1st trip DTC is detected, go to EC-938, "Diagnosis Procedure" .

WITH GST

1. Start engine and warm it up to normal operating temperature.
2. Check that voltage between ECM terminal 43 (Fuel tank temperature sensor signal) and ground is less than 4.2 V.
3. Turn ignition switch OFF and wait at least 10 seconds.
4. Wait at least 10 seconds.
5. Select Service $07 with GST.
   If 1st trip DTC is detected, go to EC-938, "Diagnosis Procedure".

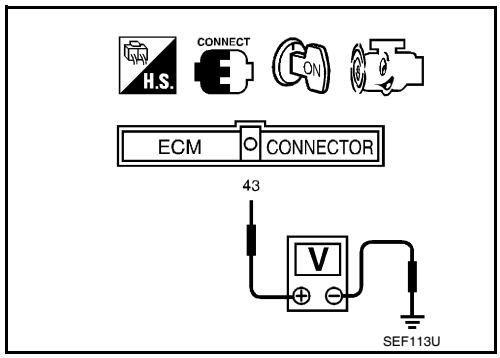

Wiring Diagram

INFOID:0000000005285474

EC-PRE/SE-01

: DETECTABLE LINE FOR DTC
: NON-DETECTABLE LINE FOR DTC

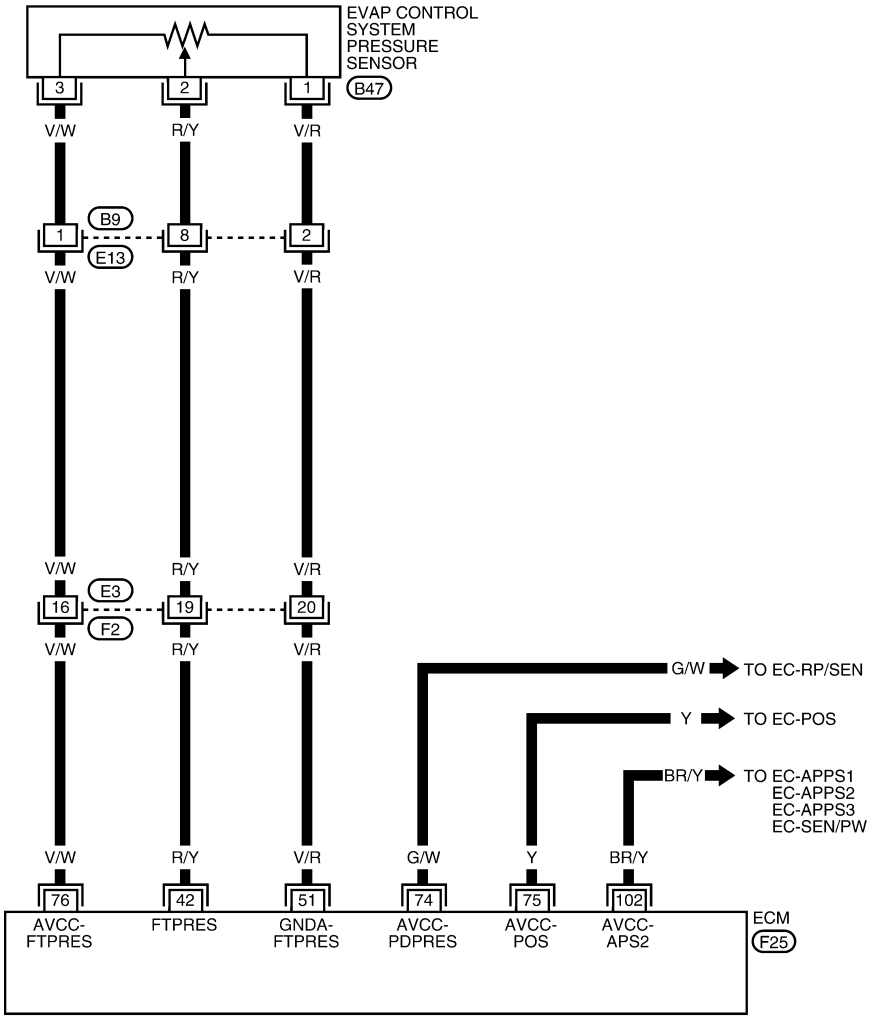

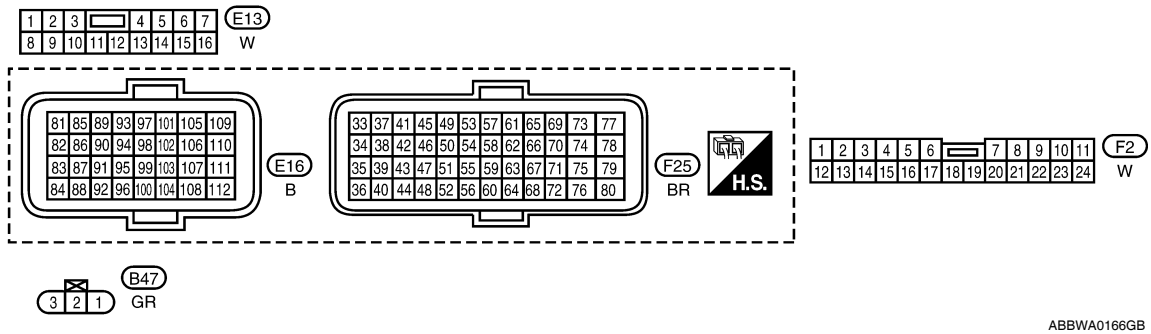

Specification data are reference values and are measured between each terminal and ground.

CAUTION:

Do not use ECM ground terminals when measuring input/output voltage. Doing so may result in damage to the ECM's transistor. Use a ground other than ECM terminals, such as the ground.

TERMINAL NO.	WIRE COLOR	ITEM	CONDITION	DATA (DC Voltage)
42	R/Y	EVAP control system pressure sensor	**[Ignition switch: ON]**	Approximately 1.8 - 4.8 V
51	V/R	Sensor ground (EVAP control system pressure sensor)	**[Engine is running]** • **Warm-up condition** • Idle speed	Approximately 0 V
74	G/W	Sensor power supply (Refrigerant pressure sensor)	**[Ignition switch: ON]**	Approximately 5 V
75	Y	Sensor power supply [Crankshaft position sensor (POS)]	**[Ignition switch: ON]**	Approximately 5 V
76	V/W	EVAP control system pressure sensor power supply	**[Ignition switch: ON]**	Approximately 5 V
102	BR/Y	Sensor power supply (APP sensor 2)	**[Ignition switch: ON]**	Approximately 5 V

Diagnosis Procedure

INFOID:0000000005285475

1. CHECK GROUND CONNECTIONS

1. Turn ignition switch OFF.
2. Loosen and retighten ground screws on the body. Refer to EC-711, "Ground Inspection".

- ⇦ : Vehicle front
- Body ground (1)

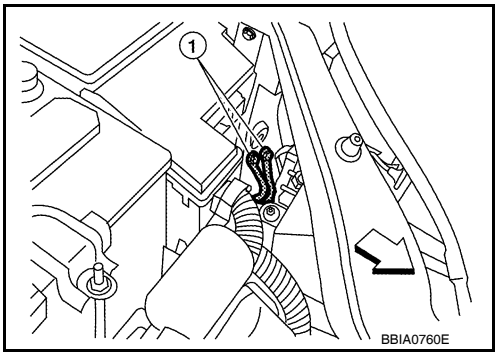

OK or NG

OK >> GO TO 2.
NG >> Repair or replace ground connections.

2. CHECK CONNECTOR

1. Disconnect EVAP control system pressure sensor (1) harness connector.

- This illustration is a view from under vehicle
- EVAP canister (2)
- EVAP canister vent control valve (3)

2. Check sensor harness connector for water.

Water should not exist.

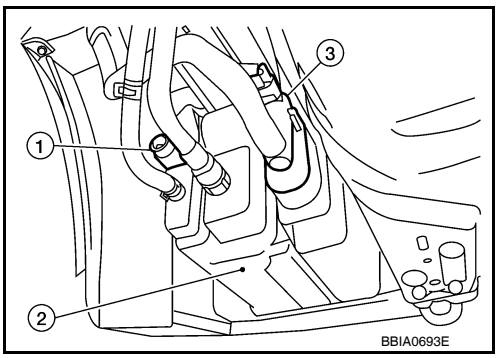

OK or NG

OK >> GO TO 3.
NG >> Repair or replace harness connector.

3. CHECK EVAP CONTROL SYSTEM PRESSURE SENSOR POWER SUPPLY CIRCUIT-I

1. Turn ignition switch ON.

2. Check voltage between EVAP control system pressure sensor terminal 3 and ground with CONSULT-III or tester.

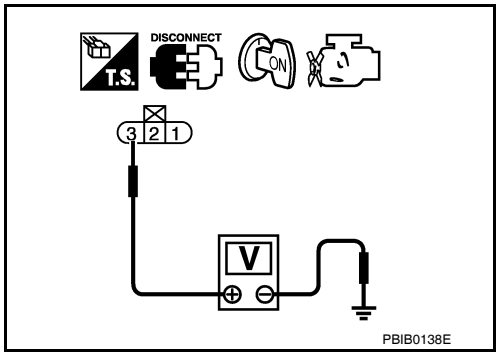

Voltage: Approximately 5 V

OK or NG

OK >> GO TO 11.
NG >> GO TO 4.

4. CHECK EVAP CONTROL SYSTEM PRESSURE SENSOR POWER SUPPLY CIRCUIT-II

1. Turn ignition switch OFF.
2. Disconnect ECM harness connector.
3. Check harness continuity between EVAP control system pressure sensor terminal 3 and ECM terminal 76. Refer to Wiring Diagram.

Continuity should exist.

OK or NG

OK >> GO TO 6.
NG >> GO TO 5.

5. DETECT MALFUNCTIONING PART

Check the following.
- Harness connectors E3, F2
- Harness connectors B9, E13
- Harness for open between EVAP control system pressure sensor and ECM

>> Repair open circuit.

6. CHECK POWER SUPPLY CIRCUITS

Check harness for short to power and short to ground, between the following terminals.

ECM terminal	Sensor terminal	Reference Wiring Diagram
74	Refrigerant pressure sensor terminal 3	EC-1109, "Wiring Diagram"
75	Crankshaft position sensor (POS) terminal 1	EC-871, "Wiring Diagram"
76	EVAP control system pressure sensor terminal3	EC-930, "Wiring Diagram"
102	APP sensor terminal 5	EC-1052, "Wiring Diagram"

OK or NG

OK >> GO TO 7.
NG >> Repair short to ground or short to power in harness or connectors.

7. CHECK REFRIGERANT PRESSURE SENSOR

Refer to MTC-27.

OK or NG

OK >> GO TO 8.
NG >> Replace refrigerant pressure sensor.

8. CHECK CRANKSHAFT POSITION SENSOR (POS)

Refer to EC-934, "Component Inspection".

OK or NG

OK >> GO TO 9.
NG >> Replace crankshaft position sensor (POS).

9. CHECK APP SENSOR

Refer to EC-1055, "Component Inspection".

OK or NG

OK >> GO TO 22.
NG >> GO TO 10.

10. REPLACE ACCELERATOR PEDAL ASSEMBLY

1. Replace accelerator pedal assembly.
2. Perform EC-654, "Accelerator Pedal Released Position Learning".
3. Perform EC-654, "Throttle Valve Closed Position Learning".
4. Perform EC-654, "Idle Air Volume Learning".

>> **INSPECTION END**

11. CHECK EVAP CONTROL SYSTEM PRESSURE SENSOR GROUND CIRCUIT FOR OPEN AND SHORT

1. Turn ignition switch OFF.
2. Disconnect ECM harness connector.
3. Check harness continuity between EVAP control system pressure sensor terminal 1 and ECM terminal 51. Refer to Wiring Diagram.

Continuity should exist.

4. Also check harness for short to ground and short to power.

OK or NG

OK >> GO TO 13.
NG >> GO TO 12.

12. DETECT MALFUNCTIONING PART

Check the following.
- Harness connectors E3, F2
- Harness connectors B9, E13
- Harness for open or short between EVAP control system pressure sensor and ECM

>> Repair open circuit or short to ground or short to power in harness or connectors.

13. CHECK EVAP CONTROL SYSTEM PRESSURE SENSOR INPUT SIGNAL CIRCUIT FOR OPEN AND SHORT

1. Check harness continuity between ECM terminal 42 and EVAP control system pressure sensor terminal 2. Refer to Wiring Diagram.

Continuity should exist.

2. Also check harness for short to ground and short to power.

OK or NG

OK >> GO TO 15.
NG >> GO TO 14.

14. DETECT MALFUNCTIONING PART

Check the following.
- Harness connectors E3, F2
- Harness connectors B9, E13
- Harness for open or short between ECM and EVAP control system pressure sensor

>> Repair open circuit or short to ground or short to power in harness or connectors.

15. CHECK RUBBER TUBE

1. Disconnect rubber tube connected to EVAP canister vent control valve.
2. Check the rubber tube for clogging, vent and kinked.

OK or NG

OK >> GO TO 16.
NG >> Clean the rubber tube using an air blower, repair or replace rubber tube.

16. CHECK EVAP CANISTER VENT CONTROL VALVE

Refer to EC-917, "Component Inspection".

OK or NG

OK >> GO TO 17.
NG >> Replace EVAP canister vent control valve.

17. CHECK EVAP CONTROL SYSTEM PRESSURE SENSOR

Refer to EC-942, "Component Inspection".

OK or NG

OK >> GO TO 18.
NG >> Replace EVAP control system pressure sensor.

18. CHECK DRAIN FILTER

Refer to EC-891, "Component Inspection".

OK or NG

OK >> GO TO 19.
NG >> Replace drain filter.

19. CHECK IF EVAP CANISTER SATURATED WITH WATER

1. Remove EVAP canister with EVAP canister vent control valve and EVAP control system pressure sensor attached.
2. Does water drain from the EVAP canister?

Yes or No

Yes >> GO TO 20.
No >> GO TO 22.

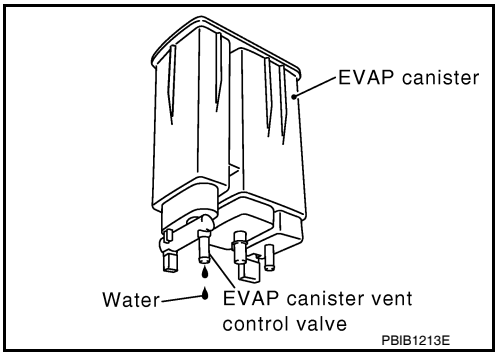

20. CHECK EVAP CANISTER

Weigh the EVAP canister with the EVAP canister vent control valve and EVAP control system pressure sensorattached.

The weight should be less than 1.9 kg (4.2 lb).

OK or NG

OK >> GO TO 22.
NG >> GO TO 21.

21. DETECT MALFUNCTIONING PART

Check the following.
- EVAP canister for damage
- EVAP hose connected to EVAP canister for clogging or poor connection

>> Repair hose or replace EVAP canister.

22. CHECK INTERMITTENT INCIDENT

Refer to EC-706.

>> **INSPECTION END**

Component Inspection

INFOID:0000000005285476

EVAP CONTROL PRESSURE SENSOR

1. Remove EVAP control system pressure sensor with its harness connector connected from EVAP canister. **Always replace O-ring with a new one.**
2. Install a vacuum pump to EVAP control system pressure sensor.
3. Turn ignition switch ON and check output voltage between ECM terminal 42 and ground under the following conditions.

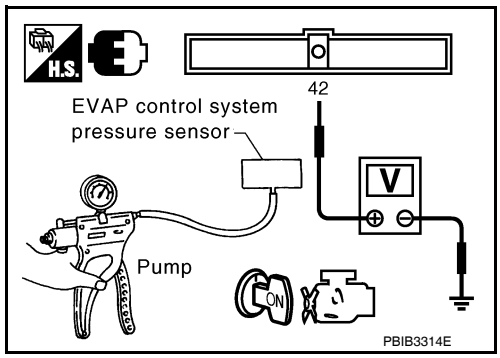

Applied vacuum kPa (mmHg, inHg)	Voltage
Not applied	1.8 - 4.8 V
-26.7 (-200, -7.87)	2.1 to 2.5 V lower than above value

CAUTION:
- **Always calibrate the vacuum pump gauge when using it.**
- **Do not apply below -93.3 kPa (-700 mmHg, -27.56 inHg) or pressure over 101.3 kPa (760 mmHg, 29.92 inHg).**

4. If NG, replace EVAP control system pressure sensor.

DTC P0455 EVAP CONTROL SYSTEM

On Board Diagnosis Logic

INFOID:0000000005285477

This diagnosis detects a very large leak (fuel filler cap fell off etc.) in EVAP system between the fuel tank and EVAP canister purge volume control solenoid valve.

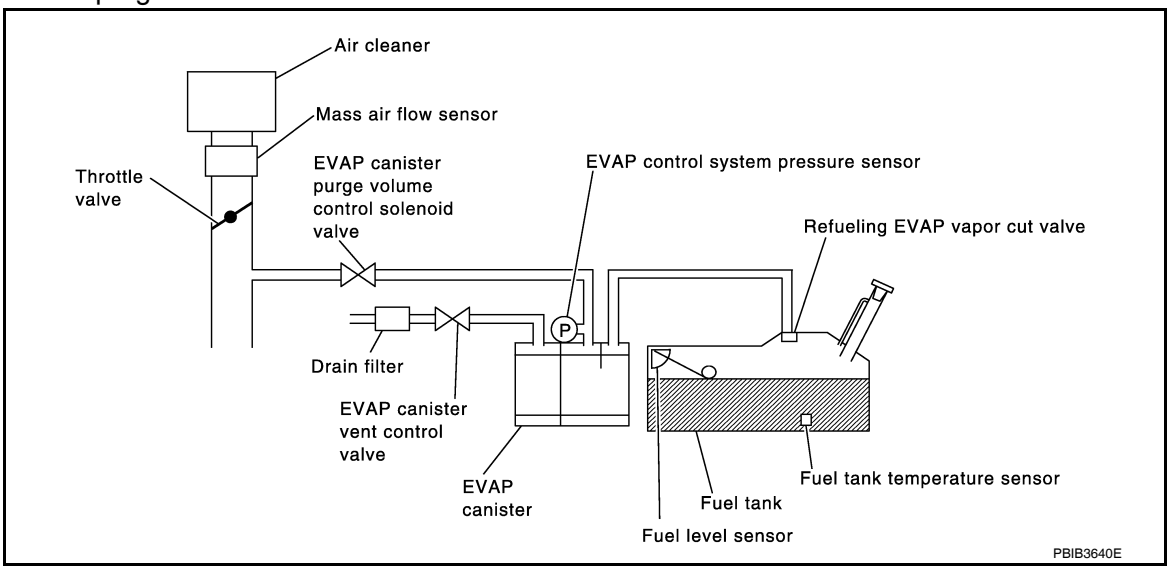

DTC No.	Trouble diagnosis name	DTC detecting condition	Possible cause
P0455 0455	EVAP control system gross leak detected	• EVAP control system has a very large leak such as fuel filler cap fell off. • EVAP control system does not operate properly.	• Fuel filler cap remains open or fails to close. • Incorrect fuel tank vacuum relief valve • Incorrect fuel filler cap used • Foreign matter caught in fuel filler cap • Leak is in line between intake manifold and EVAP canister purge volume control solenoid valve • Foreign matter caught in EVAP canister vent control valve. • EVAP canister or fuel tank leaks • EVAP purge line (pipe and rubber tube) leaks • EVAP purge line rubber tube bent. • Loose or disconnected rubber tube • EVAP canister vent control valve and the circuit • Drain filter • EVAP canister purge volume control solenoid valve and the circuit • Fuel tank temperature sensor • O-ring of EVAP canister vent control valve is missing or damaged. • EVAP control system pressure sensor • Refueling EVAP vapor cut valve • ORVR system leaks

CAUTION:
- **Use only a genuine NISSAN fuel filler cap as a replacement. If an incorrect fuel filler cap is used, the MIL may come on.**
- **If the fuel filler cap is not tightened properly, the MIL may come on.**
- **Use only a genuine NISSAN rubber tube as a replacement.**

DTC Confirmation Procedure

INFOID:0000000005285478

CAUTION:
Never remove fuel filler cap during the DTC Confirmation Procedure.

NOTE:
If DTC Confirmation Procedure has been previously conducted, always turn ignition switch OFF and wait at least 10 seconds before conducting the next test.

TESTING CONDITION:
- **Perform "DTC WORK SUPPORT" when the fuel level is between 1/4 and 3/4 full, and vehicle is placed on flat level surface.**
- **Open engine hood before conducting the following procedure.**

WITH CONSULT-III
1. Tighten fuel filler cap securely until reteaching sound is heard.
2. Turn ignition switch ON.
3. Turn ignition switch OFF and wait at least 10 seconds.
4. Turn ignition switch ON and select "DATA MONITOR" mode with CONSULT-III.
5. Make sure that the following conditions are met.
   COOLAN TEMP/S: 0 - 100°C (32 - 212°F)
   INT/A TEMP SE: 0 - 60°C (32 - 140°F)
6. Select "EVAP SML LEAK P0442/P1442" of "EVAPORATIVE SYSTEM" in "DTC WORK SUPPORT" mode with CONSULT-III.
   Follow the instruction displayed.
   NOTE:
   If the engine speed cannot be maintained within the range displayed on the CONSULT-III screen, go to EC-648, "Basic Inspection".
7. Make sure that "OK" is displayed.
   If "NG" is displayed, select "SELF-DIAG RESULTS" mode with CONSULT-III and make sure that "EVAP GROSS LEAK [P0455]" is displayed. If it is displayed, refer to EC-944, "Diagnosis Procedure".
   If P0442 is displayed, perform Diagnostic Procedure for DTC P0442, EC-893, "Diagnosis Procedure".

WITH GST
NOTE:
Be sure to read the explanation of Driving Pattern on EC-617, "Emission-related Diagnostic Information" before driving vehicle.
1. Start engine.
2. Drive vehicle according to Driving Pattern, EC-617, "Emission-related Diagnostic Information".
3. Stop vehicle.
4. Turn ignition switch OFF, wait at least 10 seconds and then turn ignition switch ON.
5. Select SERVICE $07 with GST.

- If P0441 is displayed on the screen, go to EC-888, "Diagnosis Procedure" for DTC P0441.
- If P0442 is displayed on the screen, go to EC-893, "Diagnosis Procedure" for DTC P0442.
- If P0455 is displayed on the screen, go to EC-944, "Diagnosis Procedure".

Diagnosis Procedure

INFOID:0000000005285479

1. CHECK FUEL FILLER CAP DESIGN

1. Turn ignition switch OFF.
2. Check for genuine NISSAN fuel filler cap design.

OK or NG

OK >> GO TO 2.
NG >> Replace with genuine NISSAN fuel filler cap.

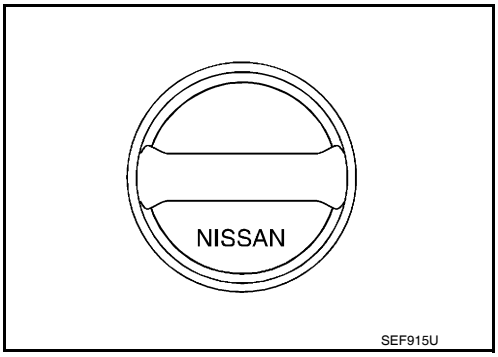

2. CHECK FUEL FILLER CAP INSTALLATION

Check that the cap is tightened properly by rotating the cap clockwise.

OK or NG

OK >> GO TO 3.
NG >> 1. Open fuel filler cap, then clean cap and fuel filler neck threads using air blower.
2. Retighten until reteaching sound is heard.

3. CHECK FUEL FILLER CAP FUNCTION

Check for air releasing sound while opening the fuel filler cap.

OK or NG

OK >> GO TO 5.
NG >> GO TO 4.

4. CHECK FUEL TANK VACUUM RELIEF VALVE

Refer to EC-602, "Component Inspection".

OK or NG

OK >> GO TO 5.
NG >> Replace fuel filler cap with a genuine one.

5. CHECK EVAP PURGE LINE

Check EVAP purge line (pipe, rubber tube, fuel tank and EVAP canister) for cracks, improper connection or disconnection.
Refer to EC-600.

OK or NG

OK >> GO TO 6.
NG >> Repair or reconnect the hose.

6. CLEAN EVAP PURGE LINE

Clean EVAP purge line (pipe and rubber tube) using air blower.

>> GO TO 7.

7. CHECK DRAIN FILTER

Refer to EC-949, "Component Inspection".

OK or NG

OK >> GO TO 8.
NG >> Replace drain filter.

8. CHECK EVAP CANISTER VENT CONTROL VALVE

Check the following.
- EVAP canister vent control is installed properly.
  Refer to EC-604, "Removal and Installation".
- EVAP canister vent control valve.
  Refer to EC-917, "Component Inspection".

OK or NG

OK >> GO TO 9.
NG >> Repair or replace EVAP canister vent control valve and O-ring.

9. INSTALL THE PRESSURE PUMP

To locate the EVAP leak, install EVAP service port adapter and pressure pump to EVAP service port securely.
For the location of EVAP service port (2), refer to EC-600, "Description".
- EVAP canister purge volume control solenoid valve (1)

• ⇦: Vehicle front

NOTE:

Improper installation of the EVAP service port adapter to the EVAP service port may cause leaking.

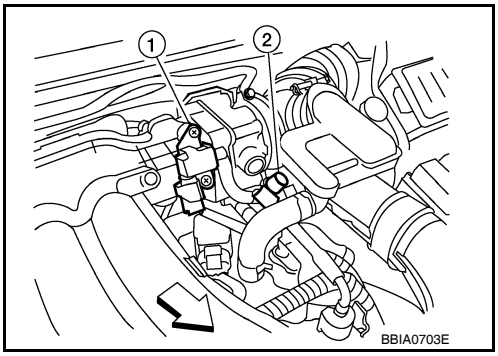

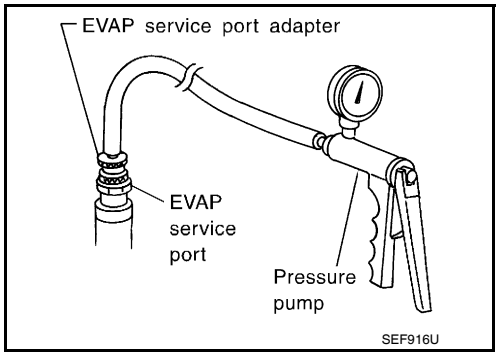

With CONSULT-III>>GO TO 10.
Without CONSULT-III>>GO TO 11.

10. CHECK FOR EVAP LEAK

With CONSULT-III

1. Turn ignition switch ON.
2. Select “EVAP SYSTEM CLOSE” of “WORK SUPPORT” mode with CONSULT-III.
3. Touch “START” and apply pressure into the EVAP line until the pressure indicator reaches the middle of the bar graph.
   CAUTION:
   - **Never use compressed air or a high pressure pump.**
   - **Do not exceed 4.12 kPa (0.042 kg/cm^2, 0.6 psi) of pressure in the system.**
4. Using EVAP leak detector, locate the EVAP leak. For the leak detector, refer to the instruction manual for more details.
   Refer to EC-600, "Description".

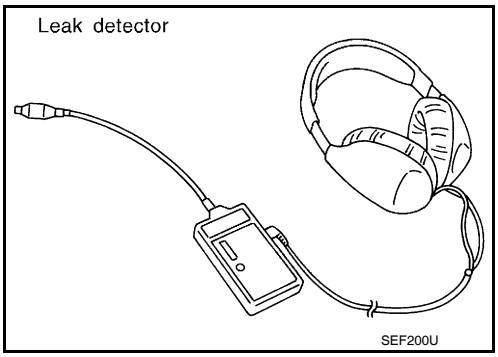

OK or NG

OK >> GO TO 12.
NG >> Repair or replace.

11. CHECK FOR EVAP LEAK

Without CONSULT-III

1. Turn ignition switch OFF.

2. Apply 12 volts DC to EVAP canister vent control valve (3). The valve will close. (Continue to apply 12 volts until the end of test.)
- This illustration is a view from under vehicle
- EVAP control system pressure sensor (1)
- EVAP canister (2)

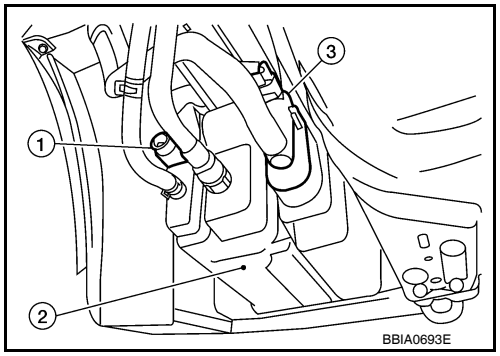

3. Pressurize the EVAP line using pressure pump with 1.3 to 2.7 kPa (10 to 20 mmHg, 0.39 to 0.79 inHg), then remove pump and EVAP service port adapter.
CAUTION:
- **Never use compressed air or a high pressure pump.**
- **Do not exceed 4.12 kPa (0.042 kg/cm^2, 0.6 psi) of pressure in the system.**

4. Using EVAP leak detector, locate the EVAP leak. For the leak detector, refer to the instruction manual for more details.
Refer to EC-600, "Description".

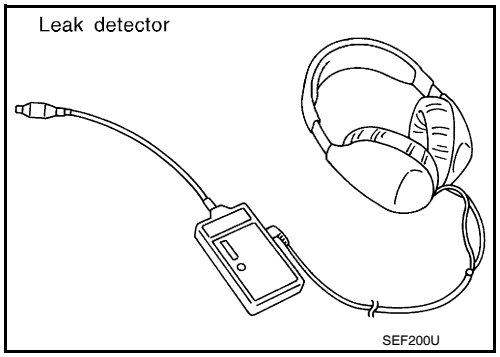

OK or NG

OK >> GO TO 13.
NG >> Repair or replace.

12. CHECK EVAP CANISTER PURGE VOLUME CONTROL SOLENOID VALVE OPERATION

With CONSULT-III

1. Disconnect vacuum hose to EVAP canister purge volume control solenoid valve at EVAP service port.
2. Start engine.
3. Perform “PURG VOL CONT/V” in “ACTIVE TEST” mode.
4. Touch “Qu” on CONSULT-III screen to increase “PURG VOL CONT/V” opening to 100%.
5. Check vacuum hose for vacuum when revving engine up to 2,000 rpm.

Vacuum should exist.

OK or NG

OK >> GO TO 15.
NG >> GO TO 14.

13. CHECK EVAP CANISTER PURGE VOLUME CONTROL SOLENOID VALVE OPERATION

Without CONSULT-III

1. Start engine and warm it up to normal operating temperature.
2. Stop engine.
3. Disconnect vacuum hose to EVAP canister purge volume control solenoid valve at EVAP service port.
4. Start engine and let it idle for at least 80 seconds.
5. Check vacuum hose for vacuum when revving engine up to 2,000 rpm.

Vacuum should exist.

OK or NG

OK >> GO TO 16.
NG >> GO TO 14.

14. CHECK VACUUM HOSE

Check vacuum hoses for clogging or disconnection. Refer to EC-676, "Vacuum Hose Drawing".

OK or NG

OK (With CONSULT-III)>>GO TO 15.
OK (Without CONSULT-III)>>GO TO 16.
NG >> Repair or reconnect the hose.

15. CHECK EVAP CANISTER PURGE VOLUME CONTROL SOLENOID VALVE

With CONSULT-III

1. Start engine.
2. Perform “PURG VOL CONT/V” in “ACTIVE TEST” mode with CONSULT-III. Check that engine speed varies according to the valve opening.

OK or NG

OK >> GO TO 17.
NG >> GO TO 16.

16. CHECK EVAP CANISTER PURGE VOLUME CONTROL SOLENOID VALVE

Refer to EC-912, "Component Inspection".

OK or NG

OK >> GO TO 17.
NG >> Replace EVAP canister purge volume control solenoid valve.

17. CHECK FUEL TANK TEMPERATURE SENSOR

Refer to EC-843, "Component Inspection".

OK or NG

OK >> GO TO 18.
NG >> Replace fuel level sensor unit.

18. CHECK EVAP CONTROL SYSTEM PRESSURE SENSOR

Refer to EC-934, "Component Inspection".

OK or NG

OK >> GO TO 19.
NG >> Replace EVAP control system pressure sensor.

19. CHECK EVAP/ORVR LINE

Check refueling EVAP/ORVR line between EVAP canister and fuel tank for clogging, kink, looseness and improper connection. For location, refer to EC-607.

OK or NG

OK >> GO TO 20.
NG >> Repair or replace hoses and tubes.

20. CHECK RECIRCULATION LINE

Check recirculation line between filler neck tube and fuel tank for clogging, kink, cracks, looseness and improper connection.

OK or NG

OK >> GO TO 21.
NG >> Repair or replace hoses, tubes or filler neck tube.

21. CHECK REFUELING EVAP VAPOR CUT VALVE

Refer to EC-610, "Component Inspection".

OK or NG

OK >> GO TO 22.
NG >> Replace refueling EVAP vapor cut valve with fuel tank.

22. CHECK INTERMITTENT INCIDENT

Refer to EC-706.

>> **INSPECTION END**

Component Inspection

INFOID:0000000005285480

DRAIN FILTER

1. Check visually for insect nests in the drain filter air inlet.
2. Check visually for cracks or flaws in the appearance.
3. Check visually for cracks or flaws in the hose.
4. Blow air into port A and check that it flows freely out of port B.
5. Block port B.
6. Blow air into port A and check that there is no leakage.
7. If NG, replace drain filter.

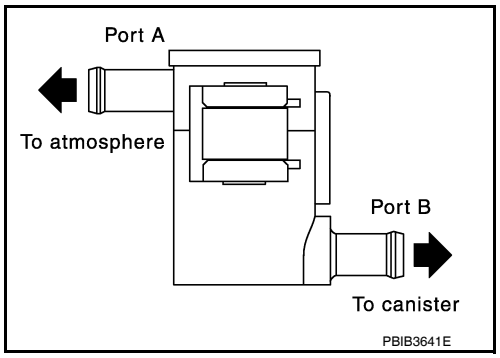

DTC P0456 EVAP CONTROL SYSTEM

On Board Diagnosis Logic

INFOID:0000000005285481

This diagnosis detects very small leaks in the EVAP line between fuel tank and EVAP canister purge volume control solenoid valve, using the intake manifold vacuum in the same way as conventional EVAP small leak diagnosis.
If ECM judges a leak which corresponds to a very small leak, the very small leak P0456 will be detected.
If ECM judges a leak equivalent to a small leak, EVAP small leak P0442 will be detected.
If ECM judges there are no leaks, the diagnosis will be OK.

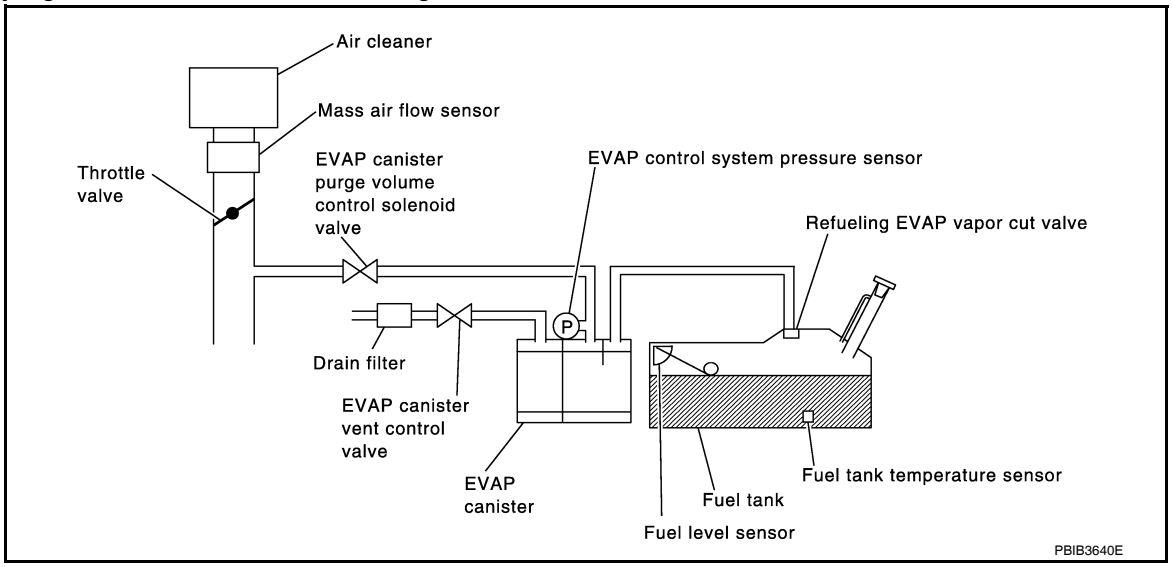

DTC No.	Trouble diagnosis name	DTC detecting condition	Possible cause
P0456 0456	Evaporative emission control system very small leak (negative pressure check)	• EVAP system has a very small leak. • EVAP system does not operate properly.	• Incorrect fuel tank vacuum relief valve • Incorrect fuel filler cap used • Fuel filler cap remains open or fails to close. • Foreign matter caught in fuel filler cap • Leak is in line between intake manifold and EVAP canister purge volume control solenoid valve. • Foreign matter caught in EVAP canister vent control valve • EVAP canister or fuel tank leaks • EVAP purge line (pipe and rubber tube) leaks • EVAP purge line rubber tube bent • Loose or disconnected rubber tube • EVAP canister vent control valve and the circuit • EVAP canister purge volume control solenoid valve and the circuit • Fuel tank temperature sensor • Drain filter • O-ring of EVAP canister vent control valve is missing or damaged • EVAP canister is saturated with water • EVAP control system pressure sensor • Refueling EVAP vapor cut valve • ORVR system leaks • Fuel level sensor and the circuit • Foreign matter caught in EVAP canister purge volume control solenoid valve

CAUTION:
- **Use only a genuine NISSAN fuel filler cap as a replacement. If an incorrect fuel filler cap is used, the MIL may come on.**
- **If the fuel filler cap is not tightened properly, the MIL may come on.**
- **Use only a genuine NISSAN rubber tube as a replacement.**

DTC Confirmation Procedure

INFOID:0000000005285482

NOTE:
- **If DTC P0456 is displayed with P0442, first perform trouble diagnosis for DTC P0456.**
- **After repair, make sure that the hoses and clips are installed properly.**
- If DTC Confirmation Procedure has been previously conducted, always turn ignition switch OFF and wait at least 10 seconds before conducting the next test.

TESTING CONDITION:
- **Open engine hood before conducting following procedure.**
- **If any of following conditions are met just before the DTC confirmation procedure, leave the vehicle for more than 1 hour.**
- **Fuel filler cap is removed.**
- **Refilled or drained the fuel.**
- **EVAP component parts is/are removed.**
- **Before performing the following procedure, confirm that battery voltage is more than 11 V at idle.**

WITH CONSULT-III

1. Turn ignition switch ON and select “DATA MONITOR” mode with CONSULT-III.
2. Make sure the following conditions are met.
   FUEL LEVEL SE: 0.25 - 1.4 V
   COOLAN TEMP/S: 0 - 32°C (32 - 90°F)
   FUEL T/TMP SE: 0 - 35°C (32 - 95°F)
   INT/A TEMP SE: More than 0°C (32°F)
   If NG, turn ignition switch OFF and leave the vehicle in a cool place (soak the vehicle) or refilling/draining fuel until the output voltage condition of the “FUEL LEVEL SE” meets within the range above and leave the vehicle for more than 1 hour. Then start from step 1).
3. Turn ignition switch OFF and wait at least 10 seconds.
4. Turn ignition switch ON.
5. Select “EVAP V/S LEAK P0456” of “EVAPORATIVE SYSTEM” in “DTC WORK SUPPORT” mode with CONSULT-III.
   Follow the instruction displayed.
6. Make sure that “OK” is displayed.
   If “NG” is displayed, refer to EC-952, "Diagnosis Procedure".
   NOTE:
   If the engine speed cannot be maintained within the range displayed on CONSULT-III screen, go to EC-648, "Basic Inspection".

Overall Function Check

INFOID:0000000005285483

WITH GST

Use this procedure to check the overall function of the EVAP very small leak function. During this check, a 1st trip DTC might not be confirmed.

CAUTION:
- **Never use compressed air, doing so may damage the EVAP system.**
- **Do not start engine.**
- **Do not exceeded 4.12 kPa (0.042 kg/cm^2, 0.6 psi).**

1. Attach the EVAP service port adapter securely to the EVAP service port (2).
- EVAP canister purge volume control solenoid valve (1)
- ⇦: Vehicle front

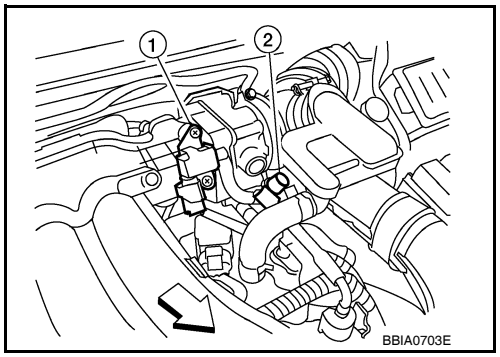

2. Set the pressure pump and a hose.
3. Also set the pressure pump with pressure gauge to the EVAP service port adapter.
4. Turn ignition switch ON.
5. Connect GST and select Service $08.
6. Using Service $08 control the EVAP canister vent control valve (close).
7. Apply pressure and make sure the following conditions are satisfied.
   Pressure to be applied: 2.7 kPa (20 mmHg, 0.79 inHg)
   Time to be waited after the pressure drawn in to the EVAP system and the pressure to be dropped: 60 seconds and the pressure should not be dropped more than 0.4 kPa (3 mmHg, 0.12 inHg).
   If NG, go to EC-952, "Diagnosis Procedure".
   If OK, go to next step.
8. Disconnect GST.
9. Start engine and warm it up to normal operating temperature.
10. Turn ignition switch OFF and wait at least 10 seconds.
11. Restart engine and let it idle for 90 seconds.
12. Keep engine speed at 2,000 rpm for 30 seconds.
13. Turn ignition switch OFF.
    NOTE:
    For more information, refer to GST Instruction Manual.

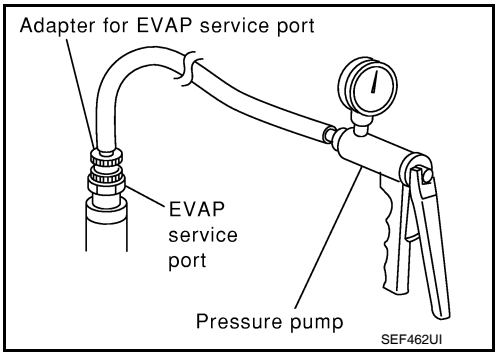

Diagnosis Procedure

INFOID:0000000005285484

1. CHECK FUEL FILLER CAP DESIGN

1. Turn ignition switch OFF.
2. Check for genuine NISSAN fuel filler cap design.

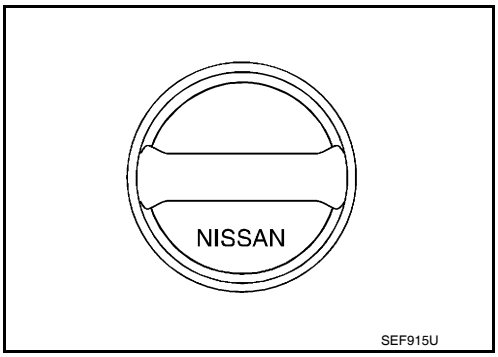

OK or NG

OK >> GO TO 2.
NG >> Replace with genuine NISSAN fuel filler cap.

2. CHECK FUEL FILLER CAP INSTALLATION

Check that the cap is tightened properly by rotating the cap clockwise.

OK or NG

OK >> GO TO 3.
NG >> 1. Open fuel filler cap, then clean cap and fuel filler neck threads using air blower.
2. Retighten until reteaching sound is heard.

3. CHECK FUEL FILLER CAP FUNCTION

Check for air releasing sound while opening the fuel filler cap.

OK or NG

OK >> GO TO 5.
NG >> GO TO 4.

4. CHECK FUEL TANK VACUUM RELIEF VALVE

Refer to EC-602, "Component Inspection".

OK or NG

OK >> GO TO 5.
NG >> Replace fuel filler cap with a genuine one.

5. INSTALL THE PRESSURE PUMP

To locate the EVAP leak, install EVAP service port adapter and pressure pump to EVAP service port securely. For the location of EVAP service port (2), refer to EC-600, "Description".

- EVAP canister purge volume control solenoid valve (1)
- ⇦: Vehicle front

NOTE:
Improper installation of the EVAP service port adapter to the EVAP service port may cause leaking.

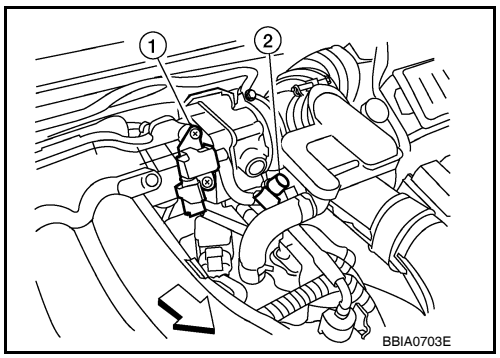

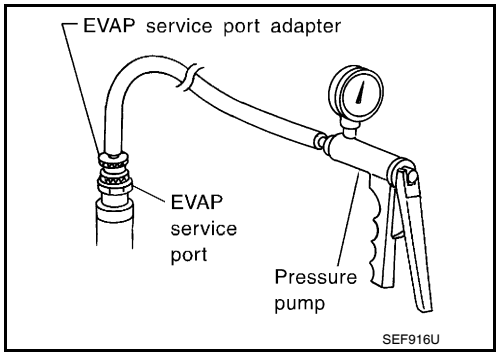

With CONSULT-III>>GO TO 6.
Without CONSULT-III>>GO TO 7.

6. CHECK FOR EVAP LEAK

With CONSULT-III

1. Turn ignition switch ON.
2. Select “EVAP SYSTEM CLOSE” of “WORK SUPPORT” mode with CONSULT-III.
3. Touch “START” and apply pressure into the EVAP line until the pressure indicator reaches the middle of the bar graph.
   CAUTION:
   - **Never use compressed air or a high pressure pump.**
   - **Do not exceed 4.12 kPa (0.042 kg/cm^2, 0.6 psi) of pressure in the system.**
4. Using EVAP leak detector, locate the EVAP leak. For the leak detector, refer to the instruction manual for more details.
   Refer to EC-600, "Description".

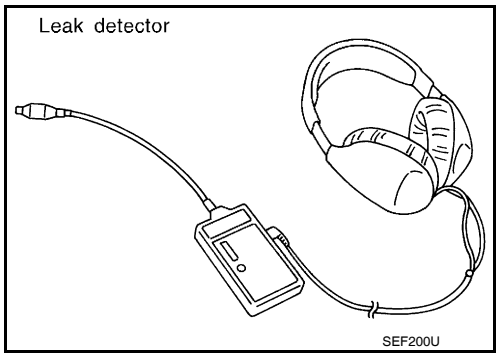

OK or NG

OK >> GO TO 8.
NG >> Repair or replace.

7. CHECK FOR EVAP LEAK

Without CONSULT-III

1. Turn ignition switch OFF.

2. Apply 12 V DC to EVAP canister vent control valve (3). The valve will close. (Continue to apply 12 V until the end of test.)
- This illustration is a view from under vehicle
- EVAP control system pressure sensor (1)
- EVAP canister (2)

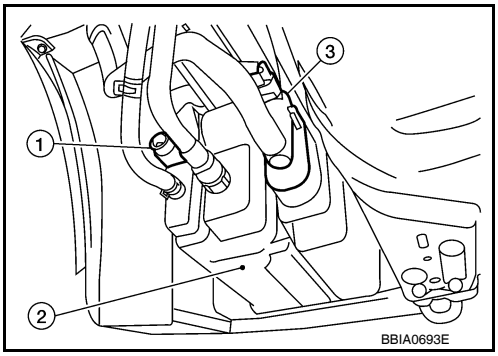

3. Pressurize the EVAP line using pressure pump with 1.3 to 2.7 kPa (10 to 20 mmHg, 0.39 to 0.79 inHg), then remove pump and EVAP service port adapter.
CAUTION:
- **Never use compressed air or a high pressure pump.**
- **Do not exceed 4.12 kPa (0.042 kg/cm^2, 0.6 psi) of pressure in the system.**

4. Using EVAP leak detector, locate the EVAP leak. For the leak detector, refer to the instruction manual for more details.
Refer to EC-600, "Description".

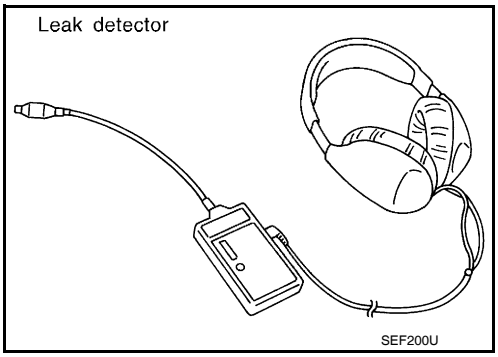

OK or NG

OK >> GO TO 8.
NG >> Repair or replace.

8. CHECK DRAIN FILTER

Refer to EC-957, "Component Inspection".

OK or NG

OK >> GO TO 9.
NG >> Replace drain filter.

9. CHECK EVAP CANISTER VENT CONTROL VALVE

Check the following.
- EVAP canister vent control valve is installed properly.
  Refer to EC-604, "Removal and Installation".
- EVAP canister vent control valve.
  Refer to EC-917, "Component Inspection".

OK or NG

OK >> GO TO 10.
NG >> Repair or replace EVAP canister vent control valve and O-ring.

10. CHECK IF EVAP CANISTER SATURATED WITH WATER

1. Remove EVAP canister with EVAP canister vent control valve and EVAP control system pressure sensor attached.

2. Does water drain from the EVAP canister?

Yes or No

Yes >> GO TO 11.
No (With CONSULT-III)>>GO TO 13.
No (Without CONSULT-III)>>GO TO 14.

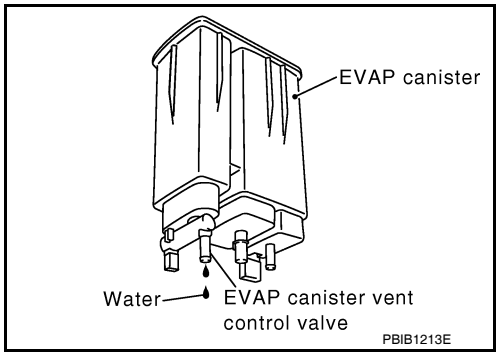

11. CHECK EVAP CANISTER

Weigh the EVAP canister with the EVAP canister vent control valve and EVAP control system pressure sensor attached.

The weight should be less than 1.9 kg (4.2 lb).

OK or NG

OK (With CONSULT-III)>>GO TO 13.
OK (Without CONSULT-III)>>GO TO 14.
NG >> GO TO 12.

12. DETECT MALFUNCTIONING PART

Check the following.
- EVAP canister for damage
- EVAP hose between EVAP canister and vehicle frame for clogging or poor connection

>> Repair hose or replace EVAP canister.

13. CHECK EVAP CANISTER PURGE VOLUME CONTROL SOLENOID VALVE OPERATION

With CONSULT-III

1. Disconnect vacuum hose to EVAP canister purge volume control solenoid valve at EVAP service port.
2. Start engine.
3. Perform “PURG VOL CONT/V” in “ACTIVE TEST” mode.
4. Touch “Qu” on CONSULT-III screen to increase “PURG VOL CONT/V” opening to 100%.
5. Check vacuum hose for vacuum when revving engine up to 2,000 rpm.

Vacuum should exist.

OK or NG

OK >> GO TO 16.
NG >> GO TO 15.

14. CHECK EVAP CANISTER PURGE VOLUME CONTROL SOLENOID VALVE OPERATION

Without CONSULT-III

1. Start engine and warm it up to normal operating temperature.
2. Stop engine.
3. Disconnect vacuum hose to EVAP canister purge volume control solenoid valve at EVAP service port.
4. Start engine and let it idle for at least 80 seconds.
5. Check vacuum hose for vacuum when revving engine up to 2,000 rpm.

Vacuum should exist.

OK or NG

OK >> GO TO 17.
NG >> GO TO 15.

15. CHECK VACUUM HOSE

Check vacuum hoses for clogging or disconnection. Refer to EC-676, "Vacuum Hose Drawing".

OK or NG

OK >> GO TO 16.
NG >> Repair or reconnect the hose.

16. CHECK EVAP CANISTER PURGE VOLUME CONTROL SOLENOID VALVE

Refer to EC-912, "Component Inspection".

OK or NG

OK >> GO TO 17.
NG >> Replace EVAP canister purge volume control solenoid valve.

17. CHECK FUEL TANK TEMPERATURE SENSOR

Refer to EC-843, "Component Inspection".

OK or NG

OK >> GO TO 18.
NG >> Replace fuel level sensor unit.

18. CHECK EVAP CONTROL SYSTEM PRESSURE SENSOR

Refer to EC-934, "Component Inspection".

OK or NG

OK >> GO TO 19.
NG >> Replace EVAP control system pressure sensor.

19. CHECK EVAP PURGE LINE

Check EVAP purge line (pipe, rubber tube, fuel tank and EVAP canister) for cracks or improper connection. Refer to EC-600, "Description".

OK or NG

OK >> GO TO 20.
NG >> Repair or reconnect the hose.

20. CLEAN EVAP PURGE LINE

Clean EVAP purge line (pipe and rubber tube) using air blower.

>> GO TO 21.

21. CHECK EVAP/ORVR LINE

Check EVAP/ORVR line between EVAP canister and fuel tank for clogging, kink, looseness and improper connection. For location, refer to EC-607.

OK or NG

OK >> GO TO 22.
NG >> Repair or replace hoses and tubes.

22. CHECK RECIRCULATION LINE

Check recirculation line between filler neck tube and fuel tank for clogging, kink, cracks, looseness and improper connection.

OK or NG

OK >> GO TO 23.
NG >> Repair or replace hose, tube or filler neck tube.

23. CHECK REFUELING EVAP VAPOR CUT VALVE

Refer to EC-610, "Component Inspection".

OK or NG

OK >> GO TO 24.
NG >> Replace refueling EVAP vapor cut valve with fuel tank.

24. CHECK FUEL LEVEL SENSOR

Refer to FL-6.

OK or NG

OK >> GO TO 25.

NG >> Replace fuel level sensor unit.

25. CHECK INTERMITTENT INCIDENT

Refer to EC-706.

>> **INSPECTION END**

Component Inspection

INFOID:0000000005285485

DRAIN FILTER

1. Check visually for insect nests in the drain filter air inlet.
2. Check visually for cracks or flaws in the appearance.
3. Check visually for cracks or flaws in the hose.
4. Blow air into port A and check that it flows freely out of port B.
5. Block port B.
6. Blow air into port A and check that there is no leakage.
7. If NG, replace drain filter.

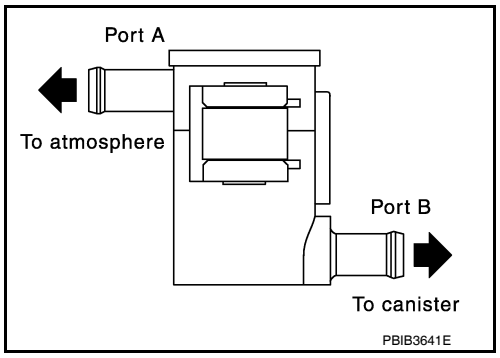

DTC P0460 FUEL LEVEL SENSOR

Component Description

INFOID:0000000005285486

The fuel level sensor (3) is mounted in the fuel level sensor unit. The sensor detects a fuel level in the fuel tank and transmits a signal to the combination meter. The combination meter sends the fuel level sensor signal to the ECM through CAN communication line.
It consists of two parts, one is mechanical float and the other is variable resistor. Fuel level sensor output voltage changes depending on the movement of the fuel mechanical float.

- Fuel level sensor unit and fuel pump (1)
- Fuel pressure regulator (2)
- Fuel tank temperature sensor (4)

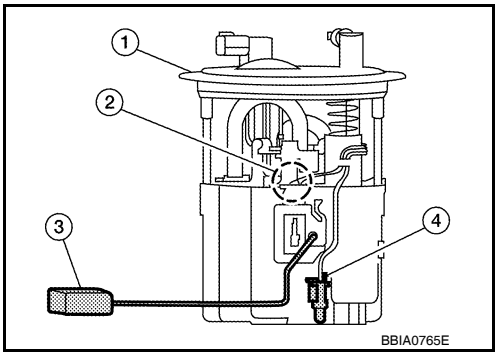

On Board Diagnosis Logic

INFOID:0000000005285487

NOTE:

- **If DTC P0460 is displayed with DTC UXXXX, first perform the trouble diagnosis for DTC UXXXX.**
- **If DTC P0460 is displayed with DTC P0607, first perform the trouble diagnosis for DTC P0607. Refer to EC-975.**

When the vehicle is parked, naturally the fuel level in the fuel tank is stable. It means that output signal of the fuel level sensor does not change. If ECM senses sloshing signal from the sensor, fuel level sensor malfunction is detected.

DTC No.	Trouble diagnosis name	DTC detecting condition	Possible cause
P0460 0460	Fuel level sensor circuit noise	Even though the vehicle is parked, a signal being varied is sent from the fuel level sensor to ECM.	• Harness or connectors (CAN communication line is open or shorted) • Harness or connectors (Fuel level sensor circuit is open or shorted) • Combination meter • Fuel level sensor

DTC Confirmation Procedure

INFOID:0000000005285488

NOTE:

If DTC Confirmation Procedure has been previously conducted, always turn ignition switch OFF and wait at least 10 seconds before conducting the next test.

1. Start engine and wait maximum of 2 consecutive minutes.
2. Check 1st trip DTC.
3. If 1st trip DTC is detected, go to EC-958, "Diagnosis Procedure".

Diagnosis Procedure

INFOID:0000000005285489

1. CHECK FUEL GAUGE OPERATION

Refer to DI-14, "Self-Diagnosis Mode of Combination Meter".

OK or NG

OK >> GO TO 2.
NG >> Follow the instruction of DI-14, "Self-Diagnosis Mode of Combination Meter".

2. CHECK FUEL LEVEL SENSOR AND CIRCUIT

Refer to DI-20, "Fuel Level Sensor Signal Inspection".

OK or NG

OK >> GO TO 3.
NG >> Repair or replace malfunctioning parts.

3. CHECK INTERMITTENT INCIDENT

Refer to EC-706.

>> **INSPECTION END**

Removal and Installation

INFOID:0000000005285490

FUEL LEVEL SENSOR

Refer to FL-6

DTC P0461 FUEL LEVEL SENSOR

Component Description

INFOID:0000000005285491

The fuel level sensor (3) is mounted in the fuel level sensor unit. The sensor detects a fuel level in the fuel tank and transmits a signal to the combination meter. The combination meter sends the fuel level sensor signal to the ECM through CAN communication line.
It consists of two parts, one is mechanical float and the other is variable resistor. Fuel level sensor output voltage changes depending on the movement of the fuel mechanical float.

- Fuel level sensor unit and fuel pump (1)
- Fuel pressure regulator (2)
- Fuel tank temperature sensor (4)

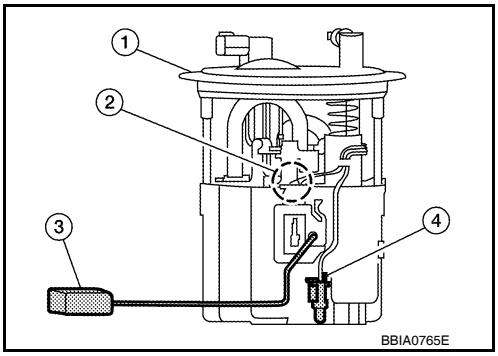

On Board Diagnosis Logic

INFOID:0000000005285492

NOTE:

- **If DTC P0461 is displayed with DTC UXXXX, first perform the trouble diagnosis for DTC UXXXX.**
- **If DTC P0461 is displayed with DTC P0607, first perform the trouble diagnosis for DTC P0607. Refer to EC-975.**
  This diagnosis detects the fuel gauge malfunction of the gauge not moving even after a long distance has been driven.Driving long distances naturally affect fuel gauge level.

DTC No.	Trouble diagnosis name	DTC detecting condition	Possible cause
P0461 0461	Fuel level sensor circuit range/performance	The output signal of the fuel level sensor does not change within the specified range even though the vehicle has been driven a long distance.	• Harness or connectors (CAN communication line is open or shorted) • Harness or connectors (Fuel level sensor circuit is open or shorted) • Combination meter • Fuel level sensor

Overall Function Check

INFOID:0000000005285493

Use this procedure to check the overall function of the fuel level sensor function. During this check, a 1st trip DTC might not be confirmed.

WARNING:
When performing following procedure, be sure to observe the handling of the fuel.
Refer to FL-10.
TESTING CONDITION:
Before starting overall function check, preparation of draining fuel and refilling fuel is required.

Diagnosis Procedure

INFOID:0000000005285494

1. CHECK FUEL GAUGE OPERATION

Refer to DI-14, "Self-Diagnosis Mode of Combination Meter".

OK or NG

OK >> GO TO 2.
NG >> Follow the instruction of DI-14, "Self-Diagnosis Mode of Combination Meter".

2. CHECK FUEL LEVEL SENSOR AND CIRCUIT

Refer to DI-20, "Fuel Level Sensor Signal Inspection".

OK or NG

OK >> GO TO 3.
NG >> Repair or replace malfunctioning parts.

3. CHECK INTERMITTENT INCIDENT

Refer to EC-706.

>> **INSPECTION END**

Removal and Installation

INFOID:0000000005285495

FUEL LEVEL SENSOR

Refer to FL-6.

DTC P0462, P0463 FUEL LEVEL SENSOR

Component Description

INFOID:0000000005285496

The fuel level sensor (3) is mounted in the fuel level sensor unit. The sensor detects a fuel level in the fuel tank and transmits a signal to the combination meter. The combination meter. sends the fuel level sensor signal to the ECM through CAN communication line.
It consists of two parts, one is mechanical float and the other is variable resistor. Fuel level sensor output voltage changes depending on the movement of the fuel mechanical float.

- Fuel level sensor unit and fuel pump (1)
- Fuel pressure regulator (2)
- Fuel tank temperature sensor (4)

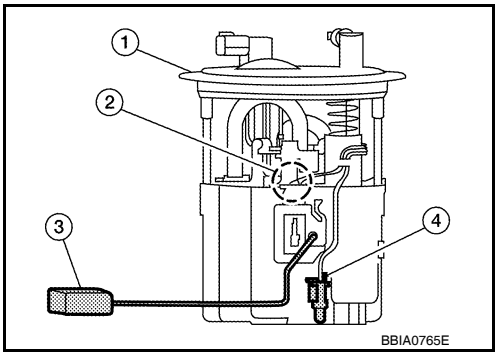

On Board Diagnosis Logic

INFOID:0000000005285497

NOTE:

- **If DTC P0462 or P0463 is displayed with DTC UXXXX, first perform the trouble diagnosis for DTC UXXXX.**
- **If DTC P0462 or P0463 is displayed with DTC P0607, first perform the trouble diagnosis for DTC P0607. Refer to EC-975.**

DTC No.	Trouble diagnosis name	DTC detecting condition	Possible cause
P0462 0462	Fuel level sensor circuit low input	An excessively low voltage from the sensor is sent to ECM.	• Harness or connectors (CAN communication line is open or shorted) • Harness or connectors (Fuel level sensor circuit is open or shorted) • Combination meter • Fuel level sensor
P0463 0463	Fuel level sensor circuit high input	An excessively high voltage from the sensor is sent to ECM.	

DTC Confirmation Procedure

INFOID:0000000005285498

NOTE:
If DTC Confirmation Procedure has been previously conducted, always turn ignition switch OFF and wait at least 10 seconds before conducting the next test.
TESTING CONDITION:
Before performing the following procedure, confirm that battery voltage is more than 11 V at ignition switch ON.

1. Turn ignition switch ON and wait at least 5 seconds.
2. Check 1st trip DTC.
3. If 1st trip DTC is detected, go to EC-962, "Diagnosis Procedure".

Diagnosis Procedure

INFOID:0000000005285499

1. CHECK FUEL GAUGE OPERATION

Refer to DI-14, "Self-Diagnosis Mode of Combination Meter".

OK or NG

OK >> GO TO 2.
NG >> Follow the instruction of DI-14, "Self-Diagnosis Mode of Combination Meter".

2. CHECK FUEL LEVEL SENSOR AND CIRCUIT

Refer to DI-20, "Fuel Level Sensor Signal Inspection".

OK or NG

OK >> GO TO 3.
NG >> Repair or replace malfunctioning parts.

3. CHECK INTERMITTENT INCIDENT

Refer to EC-706.

>> **INSPECTION END**

Removal and Installation

INFOID:0000000005285500

FUEL LEVEL SENSOR

Refer to FL-6.

DTC P0500 VSS

Description

INFOID:0000000005285501

NOTE:
- **If DTC P0500 is displayed with DTC UXXXX, first perform the trouble diagnosis for DTC UXXXX.**
- **If DTC P0500 is displayed with DTC P0607, first perform the trouble diagnosis for DTC P0607. Refer to EC-975.**

The vehicle speed signal is sent from “ABS actuator and electric unit (control unit)” or combination meter through CAN communication line.

On Board Diagnosis Logic

INFOID:0000000005285502

DTC No.	Trouble diagnosis name	DTC detecting condition	Possible cause
P0500 0500	Vehicle speed sensor	The vehicle speed signal sent to ECM is almost 0 km/h (0 MPH) even when vehicle is being driven.	• Harness or connectors (CAN communication line is open or shorted.) • Harness or connectors (Vehicle speed signal circuit is open or shorted) • ABS actuator and electric unit (control unit) • Combination meter

FAIL-SAFE MODE

When the malfunction is detected, ECM enters fail-safe mode.

Detected item	Engine operating condition in fail-safe mode
Vehicle speed sensor	The cooling fan operates (High) while engine is running.

DTC Confirmation Procedure

INFOID:0000000005285503

CAUTION:
Always drive vehicle at a safe speed.
NOTE:
If DTC Confirmation Procedure has been previously conducted, always turn ignition switch OFF and wait at least 10 seconds before conducting the next test.
TESTING CONDITION:
Steps 1 and 2 may be conducted with the drive wheels lifted in the shop or by driving the vehicle. If a road test is expected to be easier, it is unnecessary to lift the vehicle.

WITH CONSULT-III

1. Start engine.
2. Read “VHCL SPEED SE” in “DATA MONITOR” mode with CONSULT-III. The vehicle speed on CONSULT-III should exceed 10 km/h (6 MPH) when rotating wheels with suitable gear position.
   If NG, go to EC-965, "Diagnosis Procedure".
   If OK, go to following step.
3. Select “DATA MONITOR” mode with CONSULT-III.
4. Warm engine up to normal operating temperature.
5. Maintain the following conditions for at least 60 consecutive seconds.

ENG SPEED	More than 1,700 rpm (M/T) More than 1,300 rpm (CVT)
COOLAN TEMP/S	More than 70°C (158°F)
B/FUEL SCHDL	4.5 - 31.8 msec (M/T) 6.5 - 31.8 msec (CVT)
Shift lever	Suitable position
PW/ST SIGNAL	OFF

6. Check 1st trip DTC.

7. If 1st trip DTC is detected, go to EC-965, "Diagnosis Procedure".

Overall Function Check

INFOID:0000000005285504

Use this procedure to check the overall function of the vehicle speed signal circuit. During this check, a 1st trip DTC might not be confirmed.

WITH GST

1. Lift up drive wheels.
2. Start engine.
3. Read vehicle speed signal in Service $01 with GST.
   The vehicle speed signal on GST should be able to exceed 10 km/h (6 MPH) when rotating wheels with suitable gear position.
4. If NG, go to EC-965, "Diagnosis Procedure".

Diagnosis Procedure

INFOID:0000000005285505

1. CHECK DTC WITH “ABS ACTUATOR AND ELECTRIC UNIT (CONTROL UNIT)”

Refer to BRC-10.

OK or NG

OK >> GO TO 2.
NG >> Repair or replace.

2. CHECK COMBINATION METER

Refer to DI-6.

>> **INSPECTION END**

DTC P0506 ISC SYSTEM

Description

INFOID:0000000005285506

NOTE:
If DTC P0506 is displayed with other DTC, first perform the trouble diagnosis for the other DTC.
The ECM controls the engine idle speed to a specified level through the fine adjustment of the air, which is let into the intake manifold, by operating the electric throttle control actuator. The operating of the throttle valve is varied to allow for optimum control of the engine idling speed. The ECM calculates the actual engine speed from signals of crankshaft position sensor (POS) and camshaft position sensor (PHASE).
The ECM controls the electric throttle control actuator so that the engine speed coincides with the target value memorized in the ECM. The target engine speed is the lowest speed at which the engine can operate steadily. The optimum value stored in the ECM is determined by taking into consideration various engine conditions, such as during warming up, deceleration, and engine load (air conditioner, power steering and cooling fan operation, etc.).

On Board Diagnosis Logic

INFOID:0000000005285507

DTC No.	Trouble diagnosis name	DTC detecting condition	Possible cause
P0506 0506	Idle speed control system RPM lower than expected	The idle speed is less than the target idle speed by 100 rpm or more.	• Electric throttle control actuator • Intake air leak

DTC Confirmation Procedure

INFOID:0000000005285508

NOTE:
- If DTC Confirmation Procedure has been previously conducted, always turn ignition switch OFF and wait at least 10 seconds before conducting the next test.
- **If the target idle speed is out of the specified value, perform EC-654, "Idle Air Volume Learning", before conducting DTC Confirmation Procedure. For the target idle speed, refer to the EC-1115.**

TESTING CONDITION:
- **Before performing the following procedure, confirm that battery voltage is more than 11 V at idle.**
- **Always perform the test at a temperature above –10°C (14°F).**

1. Start engine and warm it up to normal operating temperature.
2. Turn ignition switch OFF and wait at least 10 seconds.
3. Start engine and run it for at least 1 minute at idle speed.
4. Check 1st trip DTC.
5. If 1st trip DTC is detected, go to EC-966, "Diagnosis Procedure".

Diagnosis Procedure

INFOID:0000000005285509

1. CHECK INTAKE AIR LEAK

1. Start engine and let it idle.
2. Listen for an intake air leak after the mass air flow sensor.

OK or NG

OK >> GO TO 2.
NG >> Discover air leak location and repair.

2. REPLACE ECM

1. Stop engine.
2. Replace ECM.
3. Perform initialization of NVIS (NATS) system and registration of all NVIS (NATS) ignition key IDs.
   Refer to BL-171, "ECM Re-communicating Function".
4. Perform EC-654, "VIN Registration".
5. Perform EC-654, "Accelerator Pedal Released Position Learning".
6. Perform EC-654, "Throttle Valve Closed Position Learning".
7. Perform EC-654, "Idle Air Volume Learning".

>> **INSPECTION END**

DTC P0507 ISC SYSTEM

Description

INFOID:0000000005285510

NOTE:
If DTC P0507 is displayed with other DTC, first perform the trouble diagnosis for the other DTC.
The ECM controls the engine idle speed to a specified level through the fine adjustment of the air, which is let into the intake manifold, by operating the electric throttle control actuator. The operating of the throttle valve is varied to allow for optimum control of the engine idling speed. The ECM calculates the actual engine speed from signals of camshaft position sensor (POS) and camshaft position sensor (PHASE).
The ECM controls the electric throttle control actuator so that the engine speed coincides with the target value memorized in the ECM. The target engine speed is the lowest speed at which the engine can operate steadily. The optimum value stored in the ECM is determined by taking into consideration various engine conditions, such as during warming up, deceleration, and engine load (air conditioner, power steering and cooling fan operation, etc.).

On Board Diagnosis Logic

INFOID:0000000005285511

DTC No.	Trouble diagnosis name	DTC detecting condition	Possible cause
P0507 0507	Idle speed control system RPM higher than expected	The idle speed is more than the target idle speed by 200 rpm or more.	• Electric throttle control actuator • Intake air leak • PCV system

DTC Confirmation Procedure

INFOID:0000000005285512

NOTE:
- If DTC Confirmation Procedure has been previously conducted, always turn ignition switch OFF and wait at least 10 seconds before conducting the next test.
- **If the target idle speed is out of the specified value, perform EC-654, "Idle Air Volume Learning", before conducting DTC Confirmation Procedure. For the target idle speed, refer to the EC-1115.**

TESTING CONDITION:
- **Before performing the following procedure, confirm that battery voltage is more than 11 V at idle.**
- **Always perform the test at a temperature above –10°C (14°F).**

1. Start engine and warm it up to normal operating temperature.
2. Turn ignition switch OFF and wait at least 10 seconds.
3. Start engine and run it for at least 1 minute at idle speed.
4. Check 1st trip DTC.
5. If 1st trip DTC is detected, go to EC-968, "Diagnosis Procedure".

Diagnosis Procedure

INFOID:0000000005285513

1. CHECK PCV HOSE CONNECTION

Confirm that PCV hose is connected correctly.

OK or NG

OK >> GO TO 2.
NG >> Repair or replace.

2. CHECK INTAKE AIR LEAK

1. Start engine and let it idle.
2. Listen for an intake air leak after the mass air flow sensor.

OK or NG

OK >> GO TO 3.
NG >> Discover air leak location and repair.

3. REPLACE ECM

1. Stop engine.
2. Replace ECM.

3. Perform initialization of NVIS (NATS) system and registration of all NVIS (NATS) ignition key IDs. Refer to BL-171, "ECM Re-communicating Function".
4. Perform EC-654, "VIN Registration".
5. Perform EC-654, "Accelerator Pedal Released Position Learning".
6. Perform EC-654, "Throttle Valve Closed Position Learning".
7. Perform EC-654, "Idle Air Volume Learning".

>> **INSPECTION END**

DTC P0603 ECM POWER SUPPLY

Component Description

INFOID:0000000005450789

Battery voltage is supplied to the ECM even when the ignition switch is turned OFF for the ECM memory function of the DTC memory, the air-fuel ratio feedback compensation value memory, the Idle Air Volume Learning value memory, etc.

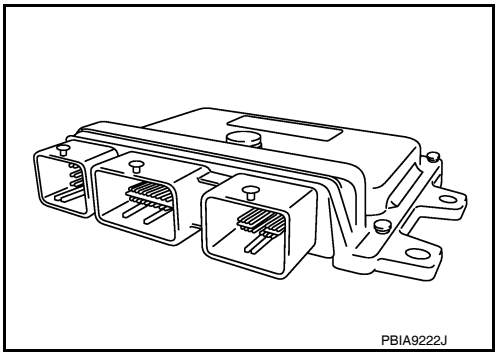

On Board Diagnosis Logic

INFOID:0000000005450790

DTC No.	Trouble diagnosis name	DTC detecting condition	Possible cause
P0603 0603	ECM power supply circuit	ECM back-up RAM system does not function properly.	• Harness or connectors [The ECM power supply (back-up) circuit is open or shorted.] • ECM

DTC Confirmation Procedure

INFOID:0000000005450791

NOTE:
If DTC Confirmation Procedure has been previously conducted, always turn ignition switch OFF and wait at least 10 seconds before conducting the next test.

1. Turn ignition switch ON and wait at least 10 seconds.
2. Turn ignition switch OFF and wait at least 5 minutes.
3. Turn ignition switch ON and wait at least 10 seconds.
4. Repeat steps 2 and 3 for five times.
5. Check 1st trip DTC.
6. If 1st trip DTC is detected, go to EC-972, "Diagnosis Procedure".

Wiring Diagram

INFOID:0000000005450792

EC-ECM/PW-01

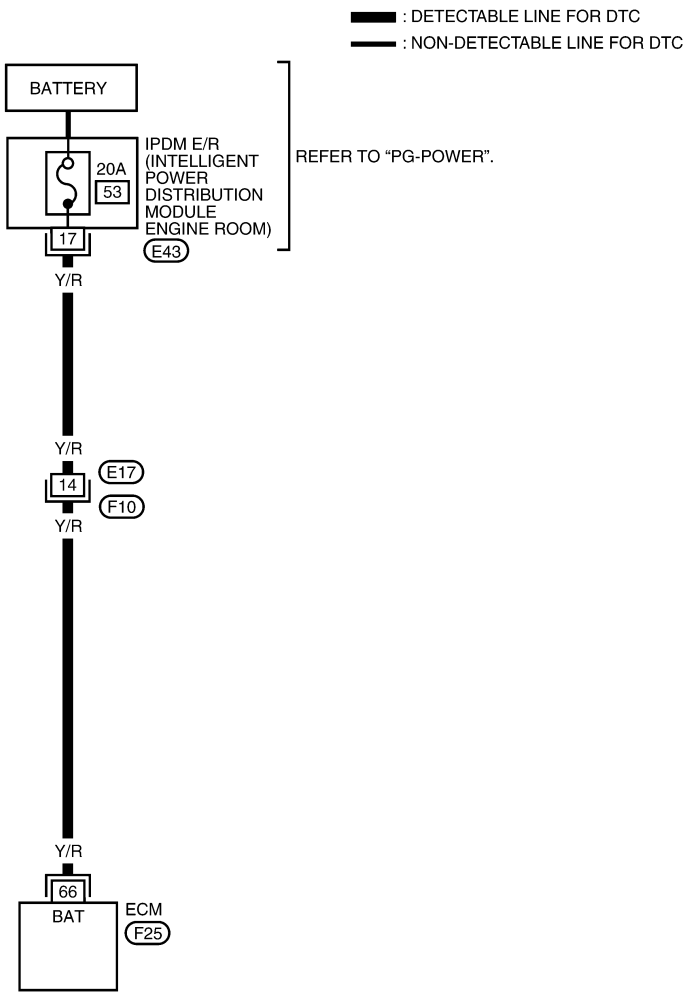

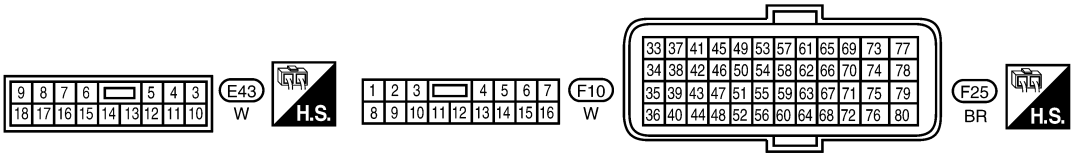

AABWA0301GB

Specification data are reference values and are measured between each terminal and ground.

CAUTION:

Do not use ECM ground terminals when measuring input/output voltage. Doing so may result in damage to the ECM's transistor. Use a ground other than ECM terminals, such as the ground.

TERMINAL NO.	WIRE COLOR	ITEM	CONDITION	DATA (DC Voltage)
66	Y/R	Power supply for ECM (Back-up)	**[Ignition switch: OFF]**	BATTERY VOLTAGE (11 - 14V)

Diagnosis Procedure

INFOID:0000000005450793

1. CHECK ECM POWER SUPPLY

1. Turn ignition switch OFF.
2. Check voltage between ECM terminal 66 and ground with CONSULT-III or tester.

Voltage: Battery voltage

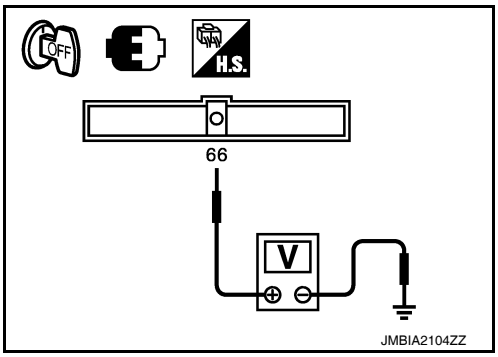

OK or NG

OK >> GO TO 3.
NG >> GO TO 2.

2. DETECT MALFUNCTIONING PART

Check the following.
- Harness connectors E17, F10
- 20 A fuse
- Harness for open or short between ECM and battery

>> Repair or replace harness or connectors.

3. CHECK INTERMITTENT INCIDENT

Refer to EC-152.

OK or NG

OK >> GO TO 4.
NG >> Repair or replace harness or connectors.

4. PERFORM DTC CONFIRMATION PROCEDURE

1. Erase DTC.
2. Perform DTC Confirmation Procedure.
   See EC-970, "DTC Confirmation Procedure".
3. Is the 1st trip DTC P0603 displayed again?

Yes or No

Yes >> GO TO 5.
No >> **INSPECTION END**

5. REPLACE ECM

1. Replace ECM.
2. Perform initialization of NVIS (NATS) system and registration of all NVIS (NATS) ignition key IDs.
   Refer to BL-171, "ECM Re-communicating Function".
3. Perform EC-99, "VIN Registration".
4. Perform EC-99, "Accelerator Pedal Released Position Learning".
5. Perform EC-99, "Throttle Valve Closed Position Learning".
6. Perform EC-99, "Idle Air Volume Learning".

>> **INSPECTION END**

DTC P0605 ECM

Component Description

INFOID:0000000005285514

The ECM consists of a microcomputer and connectors for signal input and output and for power supply. The ECM controls the engine.

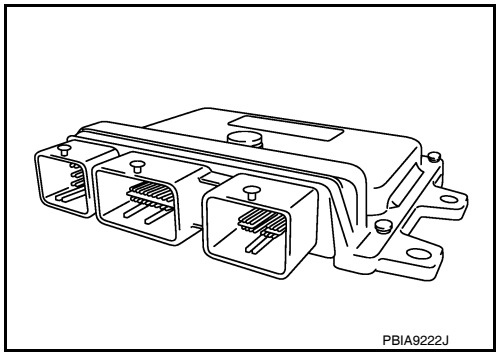

On Board Diagnosis Logic

INFOID:0000000005285515

This self-diagnosis has one or two trip detection logic.

DTC No.	Trouble diagnosis name	DTC detecting condition		Possible cause
P0605 0605	Engine control module	A)	ECM calculation function is malfunctioning.	• ECM
		B)	ECM EEP-ROM system is malfunctioning.	
		C)	ECM self shut-off function is malfunctioning.	

FAIL-SAFE MODE

ECM enters fail-safe mode when malfunction A is detected.

Detected items	Engine operation condition in fail-safe mode
Malfunction A	• ECM stops the electric throttle control actuator control, throttle valve is maintained at a fixed opening (approx. 5 degrees) by the return spring. • ECM deactivates ASCD operation.

DTC Confirmation Procedure

INFOID:0000000005285516

Perform PROCEDURE FOR MALFUNCTION A first. If the 1st trip DTC cannot be confirmed, perform PROCEDURE FOR MALFUNCTION B. If there is no malfunction on PROCEDURE FOR MALFUNCTION B, perform PROCEDURE FOR MALFUNCTION C.

NOTE:

If DTC Confirmation Procedure has been previously conducted, always turn ignition switch OFF and wait at least 10 seconds before conducting the next test.

PROCEDURE FOR MALFUNCTION A

1. Turn ignition switch ON.
2. Check 1st trip DTC.
3. If 1st trip DTC is detected, go to EC-974, "Diagnosis Procedure".

PROCEDURE FOR MALFUNCTION B

1. Turn ignition switch ON and wait at least 1 second.
2. Turn ignition switch OFF, wait at least 10 seconds and then turn ON.
3. Check 1st trip DTC.
4. If 1st trip DTC is detected, go to EC-974, "Diagnosis Procedure".

PROCEDURE FOR MALFUNCTION C

1. Turn ignition switch ON and wait at least 1 second.
2. Turn ignition switch OFF, wait at least 10 seconds and then turn ON.
3. Repeat step 2 for 32 times.

4. Check 1st trip DTC.
5. If 1st trip DTC is detected, go to EC-974, "Diagnosis Procedure".

Diagnosis Procedure

INFOID:0000000005285517

1. INSPECTION START

1. Erase DTC.
2. **Perform DTC Confirmation Procedure.**
   See EC-973, "DTC Confirmation Procedure".
3. Is the 1st trip DTC P0605 displayed again?

Yes or No

Yes >> GO TO 2.
No >> **INSPECTION END**

2. REPLACE ECM

1. Replace ECM.
2. Perform initialization of NVIS(NATS) system and registration of all NVIS(NATS) ignition key IDs.
   Refer to BL-171, "ECM Re-communicating Function".
3. Perform EC-654, "VIN Registration".
4. Perform EC-654, "Accelerator Pedal Released Position Learning".
5. Perform EC-654, "Throttle Valve Closed Position Learning".
6. Perform EC-654, "Idle Air Volume Learning".

>> **INSPECTION END**

DTC P0607 ECM

Description

INFOID:0000000005285518

CAN (Controller Area Network) is a serial communication line for real time application. It is an on-vehicle multiplex communication line with high data communication speed and excellent error detection ability. Many electronic control units are equipped onto a vehicle, and each control unit shares information and links with other control units during operation (not independent). In CAN communication, control units are connected with 2 communication lines (CAN H line, CAN L line) allowing a high rate of information transmission with less wiring. Each control unit transmits/receives data but selectively reads required data only.

On Board Diagnosis Logic

INFOID:0000000005285519

This self-diagnosis has the one trip detection logic (CVT).
The MIL will not light up for this self-diagnosis (M/T).

DTC No.	Trouble diagnosis name	DTC detecting condition	Possible cause
P0607 0607	CAN communication bus	When detecting error during the initial diagnosis for CAN controller of each control unit.	• ECM

DTC Confirmation Procedure

INFOID:0000000005285520

1. Turn ignition switch ON.
2. Check 1st trip DTC.
3. If 1st trip DTC is detected, go to EC-975, "Diagnosis Procedure".

Diagnosis Procedure

INFOID:0000000005285521

1. INSPECTION START

1. Erase DTC.
2. Perform DTC Confirmation Procedure.
   See EC-975, "DTC Confirmation Procedure".
3. Is the 1st trip DTC P0607 displayed again?

Yes or No

Yes >> GO TO 2.
No >> **INSPECTION END**

2. REPLACE ECM

1. Replace ECM.
2. Perform initialization of NVIS (NATS) system and registration of all NVIS (NATS) ignition key IDs.
   Refer to BL-171, "ECM Re-communicating Function".
3. Perform EC-654, "VIN Registration".
4. Perform EC-654, "Accelerator Pedal Released Position Learning".
5. Perform EC-654, "Throttle Valve Closed Position Learning".
6. Perform EC-654, "Idle Air Volume Learning".

>> **INSPECTION END**

DTC P0643 SENSOR POWER SUPPLY

On Board Diagnosis Logic

INFOID:0000000005285522

This self-diagnosis has the one trip detection logic.

DTC No.	Trouble diagnosis name	DTC detecting condition	Possible cause
P0643 0643	Sensor power supply circuit short	ECM detects a voltage of power source for sensor is excessively low or high.	• Harness or connectors (APP sensor 1 circuit is shorted.) (Throttle position sensor circuit is shorted.) [Camshaft position sensor (PHASE) circuit is shorted.] • Accelerator pedal position sensor • Throttle position sensor • Camshaft position sensor (PHASE)

FAIL-SAFE MODE

When the malfunction is detected, ECM enters fail-safe mode and the MIL lights up.

Engine operation condition in fail-safe mode
ECM stops the electric throttle control actuator control, throttle valve is maintained at a fixed opening (approx. 5 degrees) by the return spring.

DTC Confirmation Procedure

INFOID:0000000005285523

NOTE:
If DTC Confirmation Procedure has been previously conducted, always turn ignition switch OFF and wait at least 10 seconds before conducting the next test.

TESTING CONDITION:
Before performing the following procedure, confirm that battery voltage is more than 8 V at idle.

1. Start engine and let it idle for 1 second.
2. Check DTC.
3. If DTC is detected, go to EC-978, "Diagnosis Procedure".

Wiring Diagram

INFOID:0000000005285524

EC-SEN/PW-01

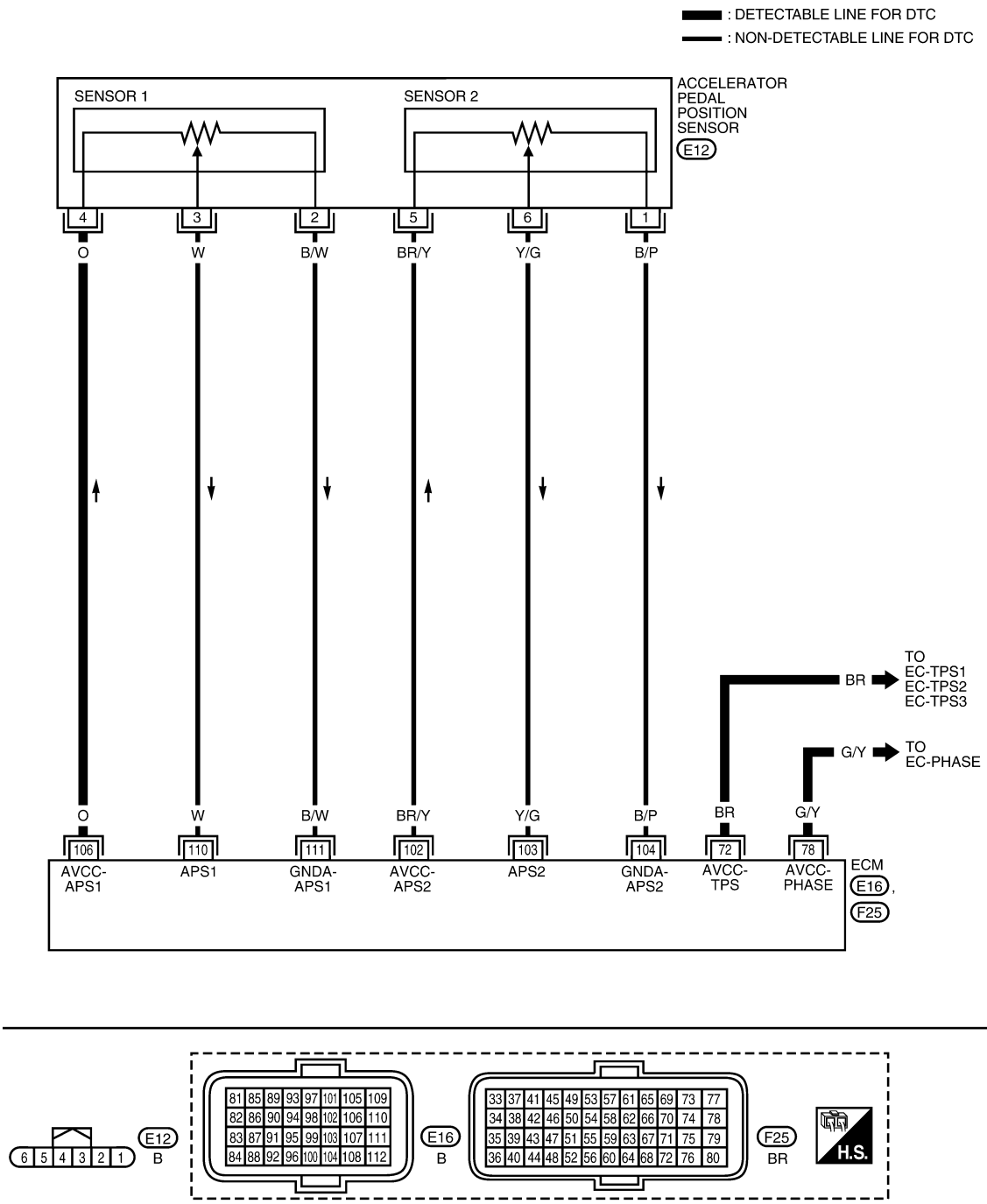

Specification data are reference values and are measured between each terminal and ground.

CAUTION:

Do not use ECM ground terminals when measuring input/output voltage. Doing so may result in damage to the ECM's transistor. Use a ground other than ECM terminals, such as the ground.

TERMINAL NO.	WIRE COLOR	ITEM	CONDITION	DATA (DC Voltage)
72	BR	Sensor power supply (Throttle position sensor)	**[Ignition switch: ON]**	Approximately 5 V
78	G/Y	Sensor power supply [Camshaft position sensor (PHASE)]	**[Ignition switch: ON]**	Approximately 5 V
102	BR/Y	Sensor power supply (APP sensor 2)	**[Ignition switch: ON]**	Approximately 5 V
103	Y/G	Accelerator pedal position sensor 2	**[Ignition switch: ON]** • Engine stopped • Accelerator pedal: Fully released	0.3 - 0.6 V
			[Ignition switch: ON] • Engine stopped • Accelerator pedal: Fully depressed	1.95 - 2.4 V
104	B/P	Sensor ground (APP sensor 2)	**[Engine is running]** • **Warm-up condition** • Idle speed	Approximately 0 V
106	O	Sensor power supply (APP sensor 1)	**[Ignition switch: ON]**	Approximately 5 V
110	W	Accelerator pedal position sensor 1	**[Ignition switch: ON]** • Engine stopped • Accelerator pedal: Fully released	0.6 - 0.9 V
			[Ignition switch: ON] • Engine stopped • Accelerator pedal: Fully depressed	3.9 - 4.7 V
111	B/W	Sensor ground (APP sensor 1)	**[Engine is running]** • **Warm-up condition** • Idle speed	Approximately 0 V

Diagnosis Procedure

INFOID:0000000005285525

1. CHECK GROUND CONNECTIONS

1. Turn ignition switch OFF.
2. Loosen and retighten ground screws on the body.
   Refer to EC-711, "Ground Inspection".

- ⇦ : Vehicle front
- Body ground (1)

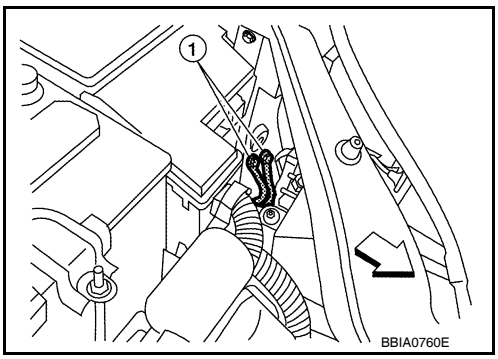

OK or NG

OK >> GO TO 2.
NG >> Repair or replace ground connections.

2. CHECK ACCELERATOR PEDAL POSITION SENSOR 1 POWER SUPPLY CIRCUIT

1. Disconnect accelerator pedal position (APP) sensor (1) harness connector.
2. Turn ignition switch ON.

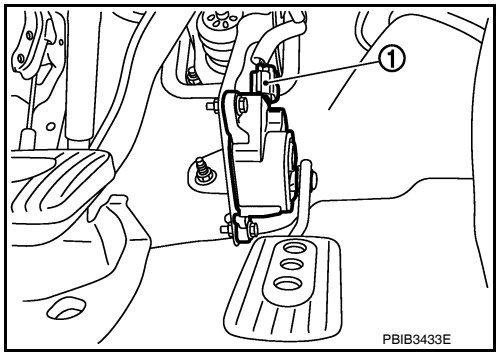

3. Check voltage between APP sensor terminal 4 and ground with CONSULT-III or tester.

Voltage: Approximately 5 V

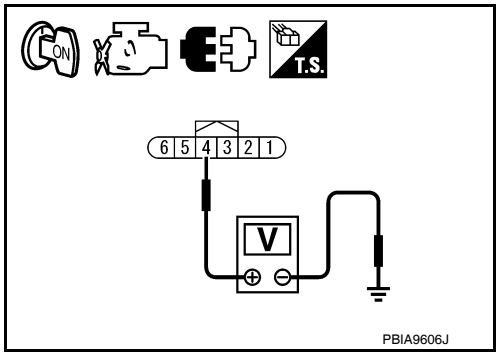

OK or NG

OK >> GO TO 8.
NG >> GO TO 3.

3. CHECK SENSOR POWER SUPPLY CIRCUITS

Check harness for short to power and short to ground, between the following terminals.

ECM terminal	Sensor terminal	Reference Wiring Diagram
72	Throttle position sensor terminal 1	EC-1058, "Wiring Diagram"
78	Camshaft position sensor (PHASE) terminal 1	EC-877, "Wiring Diagram"
106	APP sensor terminal 4	EC-977, "Wiring Diagram"

OK or NG

OK >> GO TO 4.
NG >> Repair short to ground or short to power in harness or connectors.

4. CHECK CAMSHAFT POSITION SENSOR (PHASE)

Refer to EC-880, "Component Inspection".

OK or NG

OK >> GO TO 5.
NG >> Replace camshaft position sensor (PHASE).

5. CHECK THROTTLE POSITION SENSOR

Refer to EC-1060, "Component Inspection".

OK or NG

OK >> GO TO 7.
NG >> GO TO 6.

6. REPLACE ELECTRIC THROTTLE CONTROL ACTUATOR

1. Replace the electric throttle control actuator.
2. Perform EC-654, "Throttle Valve Closed Position Learning".
3. Perform EC-654, "Idle Air Volume Learning".

>> **INSPECTION END**

7. CHECK APP SENSOR

Refer to EC-1068, "Component Inspection".

OK or NG

OK >> GO TO 9.
NG >> GO TO 8.

8. REPLACE ACCELERATOR PEDAL ASSEMBLY

1. Replace accelerator pedal assembly.
2. Perform EC-654, "Accelerator Pedal Released Position Learning".
3. Perform EC-654, "Throttle Valve Closed Position Learning".
4. Perform EC-654, "Idle Air Volume Learning".

>> **INSPECTION END**

9. CHECK INTERMITTENT INCIDENT

Refer to EC-706.

>> **INSPECTION END**

DTC P0850 PNP SWITCH

Component Description

INFOID:0000000005285526

When the shift lever position is Neutral, park/neutral position (PNP) switch is ON. (M/T)
When the shift lever position is P or N, transmission range switch is ON. (CVT)
ECM detects the position because the continuity of the line (the ON signal) exists.

CONSULT-III Reference Value in Data Monitor Mode

INFOID:0000000005285527

Specification data are reference values.

Monitor item	Condition		Specification
P/N POSI SW	• Ignition switch: ON	Shift lever: P or N (CVT), Neutral (M/T)	ON
		Shift lever: Except above	OFF

On Board Diagnosis Logic

INFOID:0000000005285528

DTC No.	Trouble diagnosis name	DTC detecting condition	Possible cause
P0850 0850	Park/neutral position switch	The park/neutral position (PNP) signal is not changed in the process of engine starting and driving.	• Harness or connectors [Park/neutral position (PNP) signal circuit is open or shorted.] • Park/neutral position (PNP) switch (M/T) • Transmission range switch (CVT)

DTC Confirmation Procedure

INFOID:0000000005285529

CAUTION:
Always drive vehicle at a safe speed.
NOTE:
If DTC Confirmation Procedure has been previously conducted, always turn ignition switch OFF and wait at least 10 seconds before conducting the next test.

WITH CONSULT-III

1. Turn ignition switch ON.
2. Select “P/N POSI SW” in “DATA MONITOR” mode with CONSULT-III. Then check the “P/N POSI SW” signal under the following conditions.

Position (Shift lever)	Known-good signal
N or P position (CVT) Neutral position (M/T)	ON
Except above	OFF

If NG, go to EC-984, "Diagnosis Procedure".
If OK, go to following step.

3. Select “DATA MONITOR” mode with CONSULT-III.
4. Start engine and warm it up to normal operating temperature.
5. Maintain the following conditions for at least 60 consecutive seconds.

ENG SPEED	More than 1,100 rpm (CVT) More than 1,500 rpm (M/T)
COOLAN TEMP/S	More than 70°C (158°F)
B/FUEL SCHDL	2.0 - 31.8 msec
VHCL SPEED SE	More than 64km/h (29 MPH)
Shift lever	Suitable position

6. Check 1st trip DTC.

7. If 1st trip DTC is detected, go to EC-984, "Diagnosis Procedure".

Overall Function Check

INFOID:0000000005285530

Use this procedure to check the overall function of the park/neutral position (PNP) signal circuit. During this check, a 1st trip DTC might not be confirmed.

WITH GST

1. Turn ignition switch ON.
2. Check voltage between ECM terminal 69 (PNP signal) and ground under the following conditions.

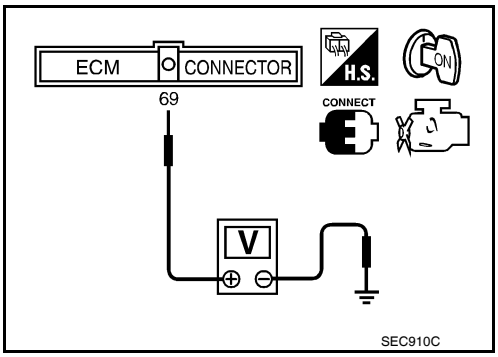

Condition (Shift lever)	Voltage (Known-good data)
P or N position (CVT) Neutral position (M/T)	BATTERY VOLTAGE (11 - 14 V)
Except above	Approx. 0 V

3. If NG, go to EC-984, "Diagnosis Procedure".

Wiring Diagram

INFOID:0000000005285531

EC-PNP/SW-01

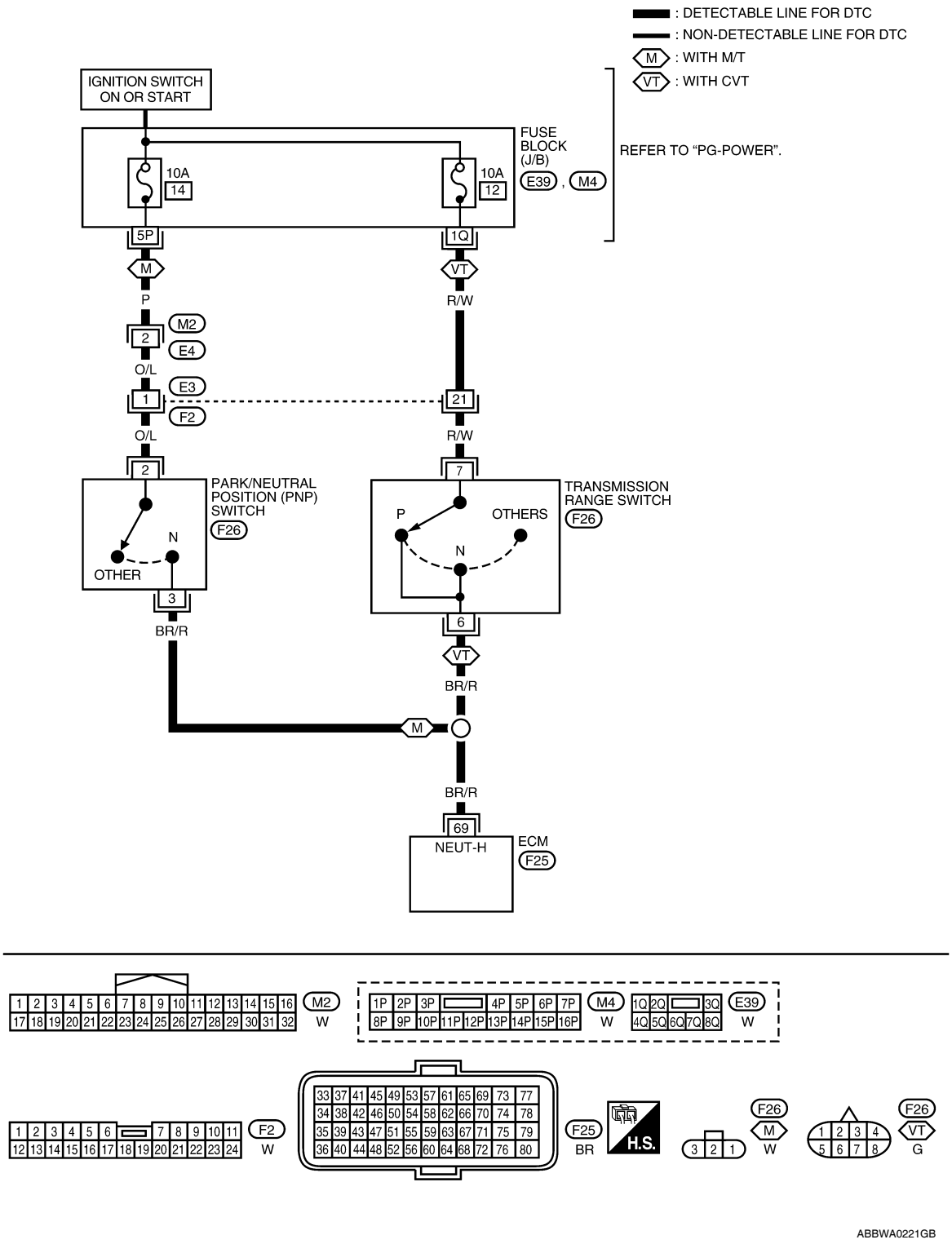

Specification data are reference values and are measured between each terminal and ground.

CAUTION:

Do not use ECM ground terminals when measuring input/output voltage. Doing so may result in damage to the ECM's transistor. Use a ground other than ECM terminals, such as the ground.

TERMINAL NO.	WIRE COLOR	ITEM	CONDITION	DATA (DC Voltage)
69	BR/R	PNP signal	**[Ignition switch: ON]** • Shift lever: P or N (CVT), Neutral (M/T)	BATTERY VOLTAGE (11 - 14 V)
			[Ignition switch: ON] • Except above	Approximately 0 V

Diagnosis Procedure

INFOID:0000000005285532

M/T MODELS

1. CHECK PNP SWITCH POWER SUPPLY CIRCUIT

1. Turn ignition switch OFF.
2. Disconnect PNP switch harness connector.
3. Turn ignition switch ON.
4. Check voltage between PNP switch terminal 2 and ground with CONSULT-III or tester.

Voltage: Battery voltage

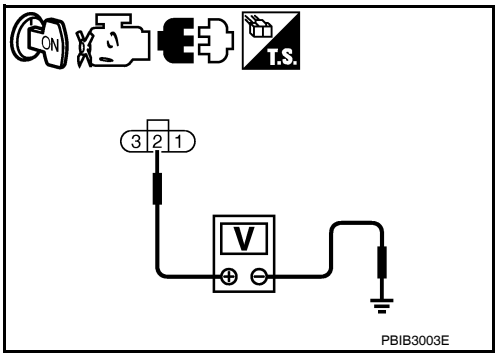

OK or NG

OK >> GO TO 3.
NG >> GO TO 2.

2. DETECT MALFUNCTIONING PART

Check the following.
- Harness connectors M2, E4
- Harness connectors E3, F2
- 10 A fuse
- Harness for open or short between PNP switch and fuse

>> Repair open circuit or short to ground or short to power in harness or connectors.

3. CHECK PNP SWITCH INPUT SIGNAL CIRCUIT FOR OPEN AND SHORT

1. Turn ignition switch OFF.
2. Disconnect ECM harness connector.
3. Check harness continuity between PNP switch terminal 3 and ECM terminal 69.
   Refer to Wiring Diagram.

Continuity should exist.

4. Also check harness for short to ground and short to power.

OK or NG

OK >> GO TO 4.
NG >> Repair open circuit or short to ground or short to power in harness or connectors.

4. CHECK PNP SWITCH

Refer to MT-14.

OK or NG

OK >> GO TO 5.
NG >> Replace PNP switch.

5. CHECK INTERMITTENT INCIDENT

Refer to EC-706.

>> **INSPECTION END**

CVT MODELS

1. CHECK TRANSMISSION RANGE SWITCH POWER SUPPLY CIRCUIT

1. Turn ignition switch OFF.
2. Disconnect transmission range switch harness connector.
3. Turn ignition switch ON.
4. Check voltage between transmission range switch terminal 7 and ground with CONSULT-III or tester.

Voltage: Battery voltage

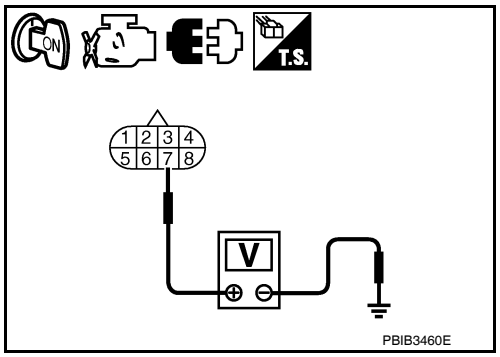

OK or NG

OK >> GO TO 3.
NG >> GO TO 2.

2. DETECT MALFUNCTIONING PART

Check the following.
- Harness connectors E3, F2
- 10 A fuse
- Harness for open or short between transmission range switch and fuse

>> Repair open circuit or short to ground or short to power in harness or connectors.

3. CHECK PNP INPUT SIGNAL CIRCUIT FOR OPEN AND SHORT

1. Turn ignition switch OFF.
2. Disconnect ECM harness connector.
3. Check harness continuity between transmission range switch terminal 6 and ECM terminal 69. Refer to Wiring Diagram.

Continuity should exist.

4. Also check harness for short to ground and short to power.

OK or NG

OK >> GO TO 4.
NG >> Repair open circuit or short to ground or short to power in harness or connectors.

4. CHECK TRANSMISSION RANGE SWITCH

Refer to CVT-60.

OK or NG

OK >> GO TO 5.
NG >> Replace transmission range switch.

5. CHECK INTERMITTENT INCIDENT

Refer to EC-706.

>> **INSPECTION END**

DTC P1148 CLOSED LOOP CONTROL

On Board Diagnosis Logic

INFOID:0000000005285533

This self-diagnosis has the one trip detection logic.

DTC No.	Trouble diagnosis name	DTC detecting condition	Possible cause
P1148 1148	Closed loop control function	The closed loop control function does not operate even when vehicle is driving in the specified condition.	• Harness or connectors [Air fuel ratio (A/F) sensor 1 circuit is open or shorted.] • Air fuel ratio (A/F) sensor 1 • Air fuel ratio (A/F) sensor 1 heater

NOTE:
DTC P1148 is displayed with another DTC for air fuel ratio (A/F) sensor 1.
Perform the trouble diagnosis for the corresponding DTC.

DTC P1212 TCS COMMUNICATION LINE

Description

INFOID:0000000005450798

NOTE:
- **If DTC P1212 is displayed with DTC U1001, first perform the trouble diagnosis for DTC U1001. Refer to EC-717.**
- **If DTC P1212 is displayed with DTC P0607, first perform the trouble diagnosis for DTC P0607. Refer to EC-987.**

This CAN communication line is used to control the smooth engine operation during the TCS operation. Pulse signals are exchanged between ECM and “ABS actuator and electric unit (control unit)”.
Be sure to erase the malfunction information such as DTC not only for “ABS actuator and electric unit (control unit)” but also for ECM after TCS related repair.

On Board Diagnosis Logic

INFOID:0000000005450799

Freeze frame data is not stored in the ECM for this self-diagnosis.
The MIL will not light up for this self-diagnosis.

DTC No.	Trouble diagnosis name	DTC detecting condition	Possible cause
P1212 1212	TCS communication line	ECM can not receive the information from “ABS actuator and electric unit (control unit)” continuously.	• Harness or connectors (The CAN communication line is open or shorted.) • ABS actuator and electric unit (control unit) • Dead (Weak) battery

DTC Confirmation Procedure

INFOID:0000000005450800

TESTING CONDITION:
Before performing the following procedure, confirm that battery voltage is more than 10.5 V at idle.

1. Start engine and let it idle for at least 10 seconds.
2. Check 1st trip DTC.
3. If 1st trip DTC is detected, go to EC-987, "Diagnosis Procedure".

Diagnosis Procedure

INFOID:0000000005450801

Go to BRC-45.

DTC P1217 ENGINE OVER TEMPERATURE

System Description

INFOID:0000000005285534

SYSTEM DESCRIPTION

NOTE:

- **If DTC P1217 is displayed with DTC UXXXX, first perform the trouble diagnosis for DTC UXXXX.**
- **If DTC P1217 is displayed with DTC P0607, first perform the trouble diagnosis for DTC P0607. Refer to EC-975.**

Cooling Fan Control

Sensor	Input Signal to ECM	ECM function	Actuator
Crankshaft position sensor (POS) Camshaft position sensor (PHASE)	Engine speed*1	Cooling fan control	• IPDM E/R (Cooling fan relays-1, -2 and -3) • Cooling fan relays-4 and -5
Battery	Battery voltage*1		
ABS actuator and electric unit (control unit)	Vehicle speed*2		
Combination meter			
Engine coolant temperature sensor	Engine coolant temperature		
Air conditioner switch	Air conditioner ON signal*2		
Refrigerant pressure sensor	Refrigerant pressure		

*1: The ECM determines the start signal status by the signals of engine speed and battery voltage.

*2: This signal is sent to ECM through CAN communication line.

The ECM controls the cooling fan corresponding to the vehicle speed, engine coolant temperature, refrigerant pressure, and air conditioner ON signal. The control system has 4-step control [HIGH/MIDDLE/LOW/OFF].

Cooling Fan Operation

Models with A/C

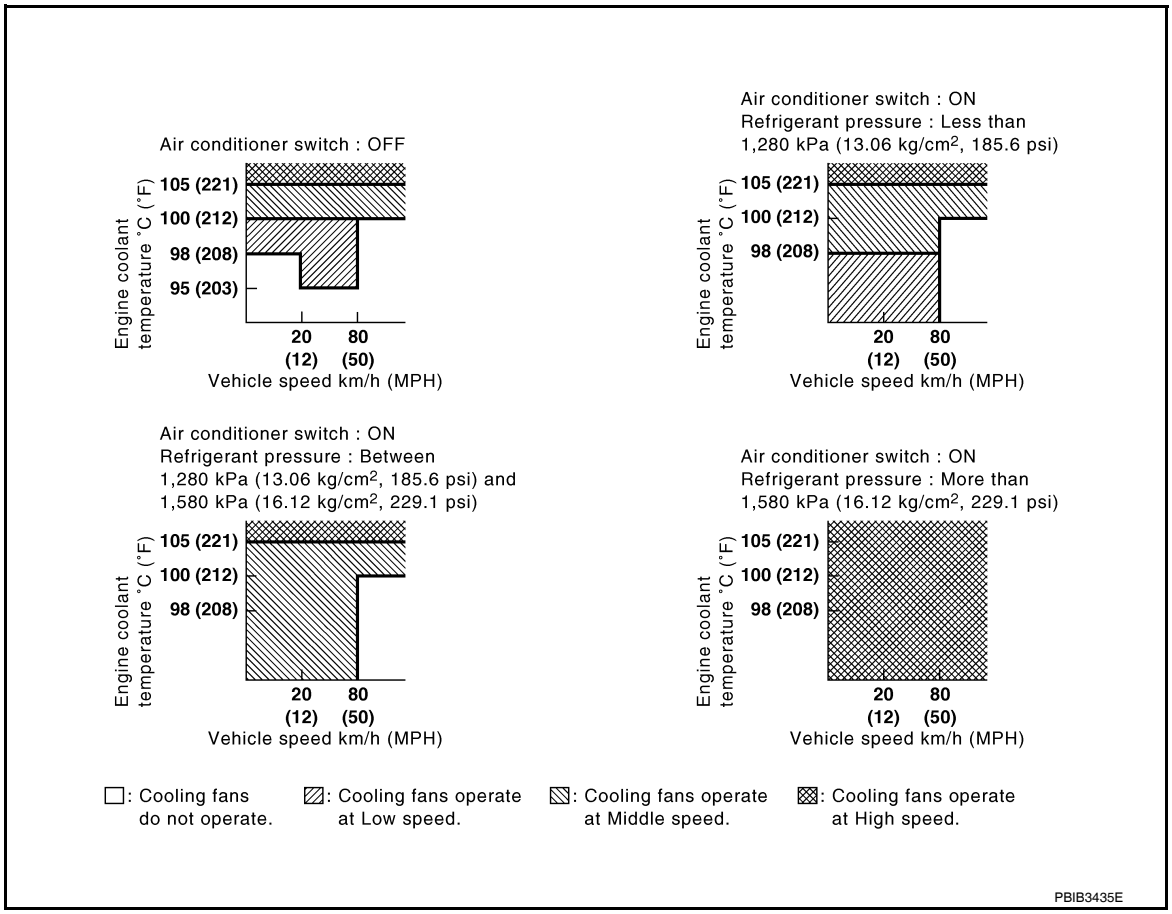

Models without A/C

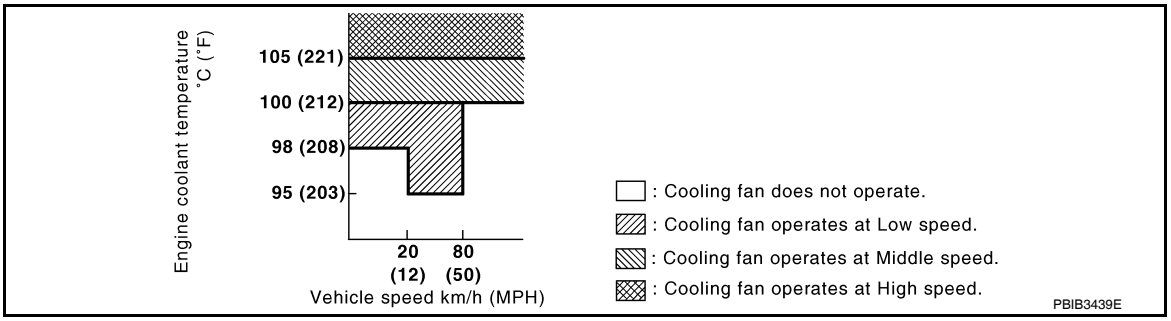

Cooling Fan Relay Operation

The ECM controls cooling fan relays through CAN communication line.

Cooling fan speed	Cooling fan relay				
	1	2	3	4	5
Stop (OFF)	OFF	OFF	OFF	OFF	OFF
Low (LOW)	OFF	OFF	OFF	ON	OFF
Middle (MID)	ON	OFF	OFF	OFF	ON
High (HI)	ON	ON	ON	OFF	ON

COMPONENT DESCRIPTION

Cooling Fan Motor

The cooling fan operates at each speed when the current flows in the cooling fan motor as follows.

Cooling fan speed	Cooling fan motor terminals	
	(+)	(–)
Middle (MID)	1	3 and 4
	2	3 and 4
	1 and 2	3
	1 and 2	4
High (HI)	1 and 2	3 and 4

The cooling fan operates at low (LOW) speed when cooling fan motors-1 and -2 are circuited in series under middle speed condition.

CONSULT-III Reference Value in Data Monitor Mode

INFOID:0000000005285535

Specification data are reference values.

Monitor item	Condition		Specification
AIR COND SIG	• Engine: After warming up, idle the engine	Air conditioner switch: OFF	OFF
		Air conditioner switch: ON (Compressor operates.)	ON
COOLING FAN	• Engine: After warming up, idle the engine • Air conditioner switch: OFF	Engine coolant temperature: 97°C (207°F) or less	OFF
		Engine coolant temperature: Between 98°C (208°F) and 99°C (210°F).	LOW
		Engine coolant temperature: Between 100°C (212°F) and 104°C (219°F).	MIDDLE
		Engine coolant temperature: 105°C (221°F) or more	HIGH

On Board Diagnosis Logic

INFOID:0000000005285536

If the cooling fan or another component in the cooling system malfunctions, engine coolant temperature will rise. When the engine coolant temperature reaches an abnormally high temperature condition, a malfunction is indicated.
This self-diagnosis has the one trip detection logic.

DTC No.	Trouble diagnosis name	DTC detecting condition	Possible cause
P1217 1217	Engine over temperature (Overheat)	• Cooling fan does not operate properly (Overheat). • Cooling fan system does not operate properly (Overheat). • Engine coolant was not added to the system using the proper filling method. • Engine coolant is not within the specified range.	• Harness or connectors (Cooling fan circuit is open or shorted.) • Cooling fan motor • IPDM E/R (Cooling fan relays-1, -2 and -3) • Cooling fan relays-4 and -5 • Radiator hose • Radiator • Reservoir tank • Radiator cap • Water pump • Thermostat • Water control valve For more information, refer to EC-998, "Main 13 Causes of Overheating".

CAUTION:
When a malfunction is indicated, be sure to replace the coolant. Refer to MA-20, "ENGINE COOLANT : Changing Engine Coolant". Also, replace the engine oil. Refer to MA-24, "ENGINE OIL : Changing Engine Oil".

1. **Fill radiator with coolant up to specified level with a filling speed of 2 liters per minute. Be sure to use coolant with the proper mixture ratio. Refer to MA-17, "Anti-freeze Coolant Mixture Ratio".**
2. **After refilling coolant, run engine to ensure that no water-flow noise is emitted.**

Overall Function Check

INFOID:0000000005285537

Use this procedure to check the overall function of the cooling fan. During this check, a DTC might not be confirmed.

WARNING:
Never remove the radiator cap when the engine is hot. Serious burns could be caused by high pressure fluid escaping from the reservoir tank or the radiator.
Wrap a thick cloth around cap. Carefully remove the cap by turning it a quarter turn to allow built-up pressure to escape. Then turn the cap all the way off.

WITH CONSULT-III

1. Check the coolant level in the reservoir tank and radiator.
   Allow engine to cool before checking coolant level.
   If the coolant level in the reservoir tank and/or radiator is below the proper range, skip the following steps and go to EC-994, "Diagnosis Procedure".
2. Confirm whether customer filled the coolant or not. If customer filled the coolant, skip the following steps and go to EC-994, "Diagnosis Procedure"
3. Turn ignition switch ON.

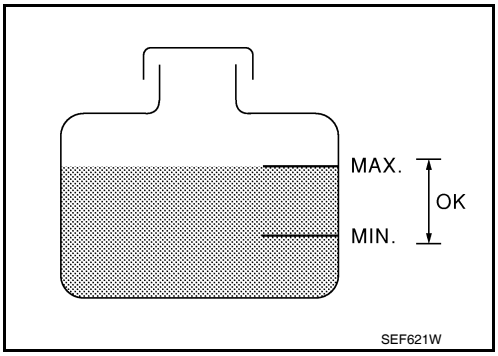

4. Perform “COOLING FAN” in “ACTIVE TEST” mode with CONSULT-III.
5. If the results are NG, go to EC-994, "Diagnosis Procedure".

WITH GST

1. Check the coolant level in the reservoir tank and radiator.
   Allow engine to cool before checking coolant level.
   If the coolant level in the reservoir tank and/or radiator is below the proper range, skip the following steps and go to EC-994, "Diagnosis Procedure".
2. Confirm whether customer filled the coolant or not. If customer filled the coolant, skip the following steps and go to EC-994, "Diagnosis Procedure".
3. Perform IPDM E/R auto active test and check cooling fan motor operation. Refer to PG-20, "Auto Active Test".
4. If NG, go to EC-994, "Diagnosis Procedure".

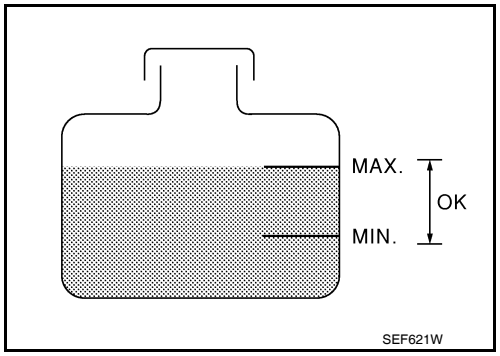

Wiring Diagram

INFOID:0000000005285538

EC-COOL/F-01

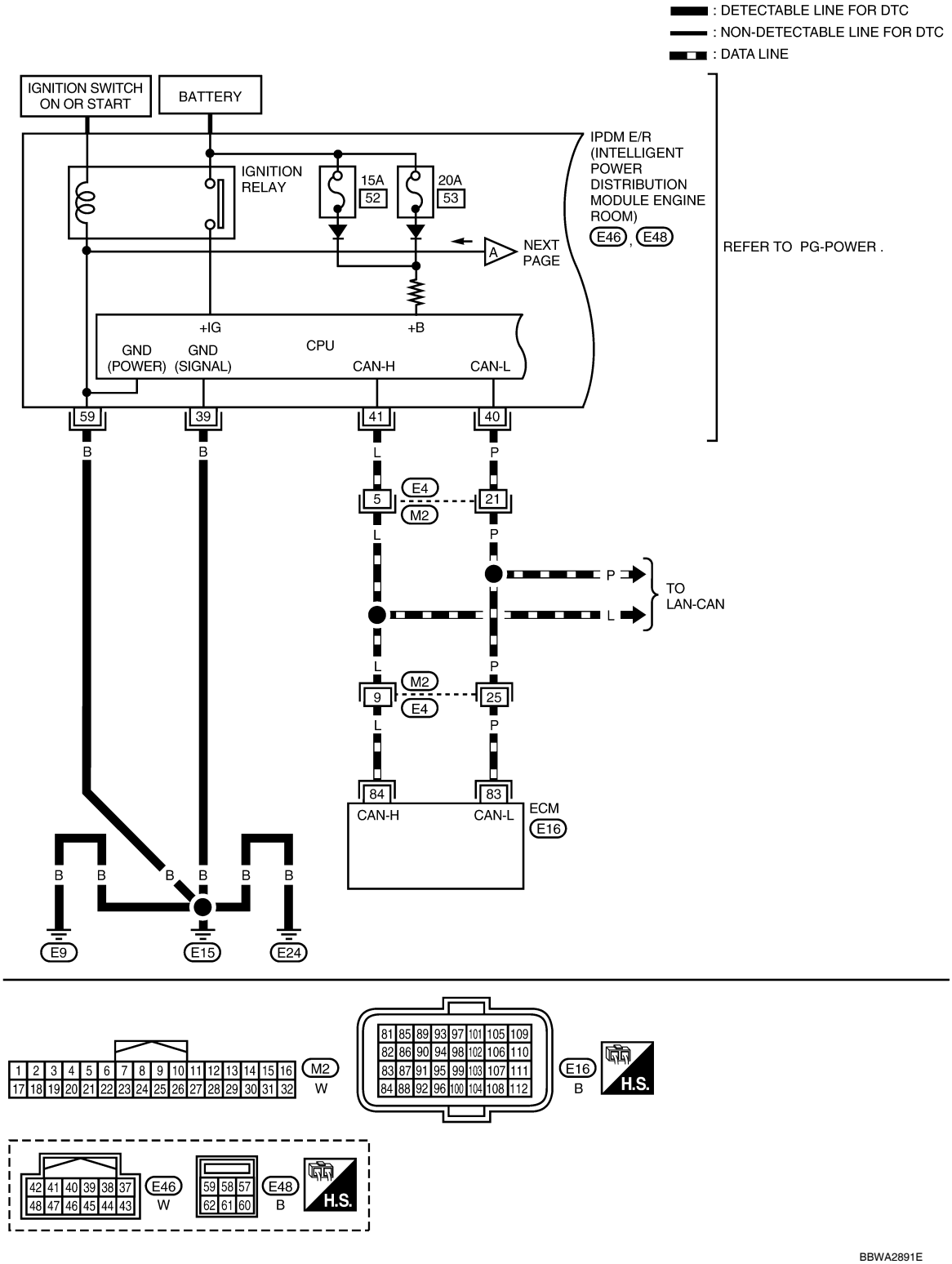

BBWA2891E

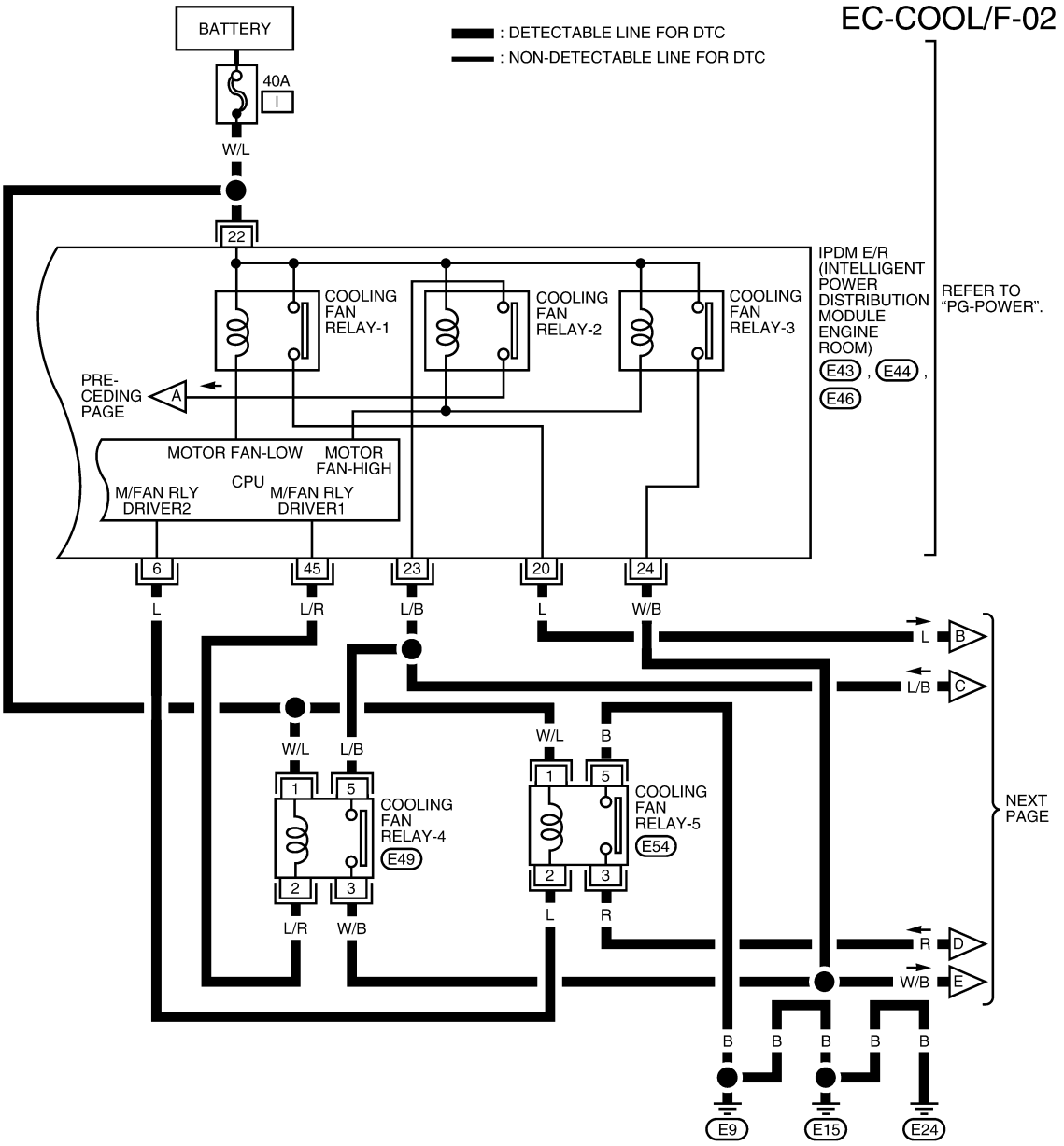
EC-COOL/F-02
: DETECTABLE LINE FOR DTC
: NON-DETECTABLE LINE FOR DTC
BATTERY
40A
I
W/L
22
IPDM E/R (INTELLIGENT POWER DISTRIBUTION MODULE ENGINE ROOM)
E43 , E44 , E46
REFER TO "PG-POWER".
COOLING FAN RELAY-1
COOLING FAN RELAY-2
COOLING FAN RELAY-3
PRE-CEDING PAGE
A
MOTOR FAN-LOW
MOTOR FAN-HIGH
CPU
M/FAN RLY DRIVER2
M/FAN RLY DRIVER1
6
45
23
20
24
L
L/R
L/B
L
W/B
B
C
W/L
L/B
W/L
B
COOLING FAN RELAY-4
E49
COOLING FAN RELAY-5
E54
L/R
W/B
L
R
D
E
NEXT PAGE
B
B
B
B
B
E9
E15
E24

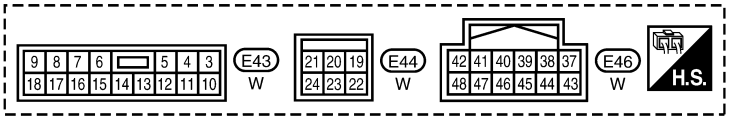
E43
W
E44
W
E46
W
H.S.

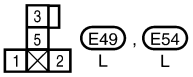
E49 , E54
L
L

BBWA2892E

EC-COOL/F-03

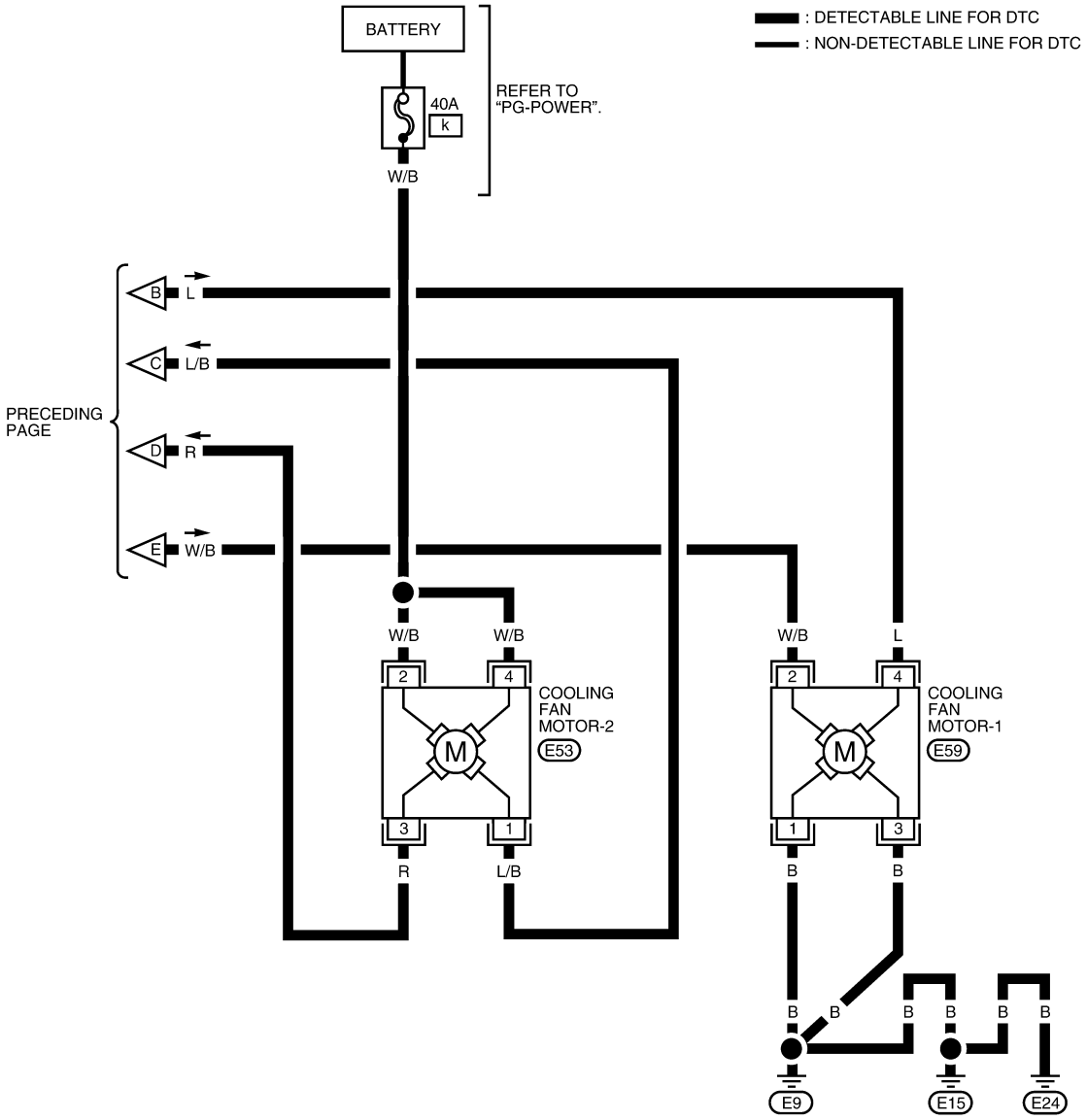

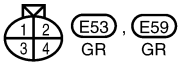

BBWA2893E

Diagnosis Procedure

INFOID:0000000005285539

1. INSPECTION START

Do you have CONSULT-III?

Yes or No

Yes >> GO TO 2.
No >> GO TO 3.

2. CHECK COOLING FAN OPERATION

With CONSULT-III

1. Turn ignition switch ON.
2. Select “COOLING FAN” in “ACTIVE TEST” mode with CONSULT-III.
3. Make sure that cooling fans-1 and -2 operates at each speed (LOW/MID/HI).

OK or NG

OK >> GO TO 4.
NG >> Check cooling fan control circuit. (Refer to "PROCEDURE A".)

3. CHECK COOLING FAN OPERATION

Without CONSULT-III

1. Perform IPDM E/R auto active test and check cooling fan motor operation.
   Refer to PG-20, "Auto Active Test".
2. Make sure that cooling fans-1 and -2 operates at each speed (Low/Middle/High).

OK or NG

OK >> GO TO 4.
NG >> Check cooling fan control circuit. (Refer to "PROCEDURE A".)

4. CHECK COOLING SYSTEM FOR LEAK

Refer to CO-11.

OK or NG

OK >> GO TO 5.
NG >> Check the following for leak.
- Hose
- Radiator
- Water pump

5. CHECK RADIATOR CAP

Refer to CO-15.

OK or NG

OK >> GO TO 6.
NG >> Replace radiator cap.

6. CHECK COMPONENT PARTS

Check the following.
- Thermostat. (Refer to CO-19.)
- Water control valve. (Refer to CO-24.)
- Engine coolant temperature sensor. (Refer to EC-765.)

OK or NG

OK >> GO TO 7.
NG >> Replace malfunctioning component parts.

7. CHECK MAIN 13 CAUSES

If the cause cannot be isolated, go to EC-998, "Main 13 Causes of Overheating".

>> **INSPECTION END**

PROCEDURE A

1. CHECK IPDM E/R POWER SUPPLY CIRCUIT

1. Turn ignition switch OFF.
2. Disconnect IPDM E/R harness connector E44.

3. Check voltage between IPDM E/R terminal 22 and ground with CONSULT-III or tester.

Voltage: Battery voltage

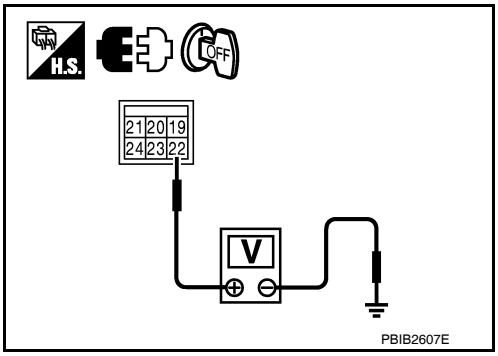

OK or NG

OK >> GO TO 3.
NG >> GO TO 2.

2. DETECT MALFUNCTIONING PART

Check the following.
- 40 A fusible link
- Harness for open or short between IPDM E/R and battery

>> Repair open circuit or short to ground or short to power in harness or connectors.

3. CHECK COOLING FAN RELAYS POWER SUPPLY CIRCUIT

1. Disconnect cooling fan relays-4 (2) and -5 (1).
- ⇦: Vehicle front

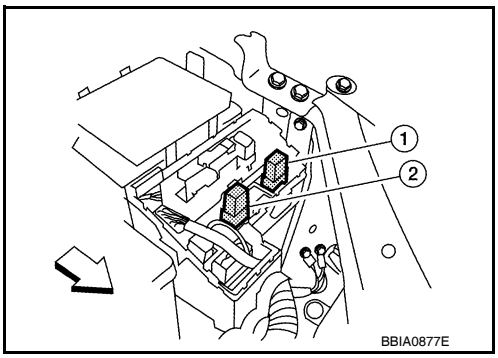

2. Check voltage between cooling fan relays-4, -5 terminal 1 and ground with CONSULT-III or tester.

Voltage: Battery voltage

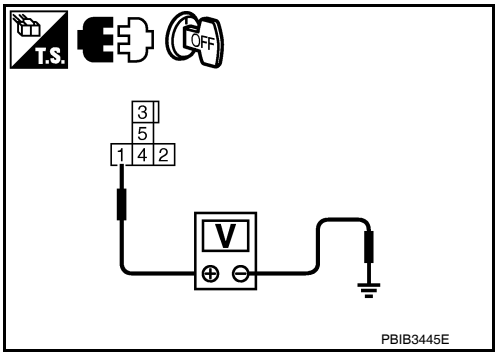

OK or NG

OK >> GO TO 4.
NG >> Repair open circuit or short to power or short to ground in harness or connectors.

4. CHECK COOLING FAN MOTORS POWER SUPPLY CIRCUIT

1. Disconnect cooling fan motor-2 harness connector (2).
- ⇦: Vehicle front
- Cooling fan motor-1 harness connector (1)
- Radiator (3)

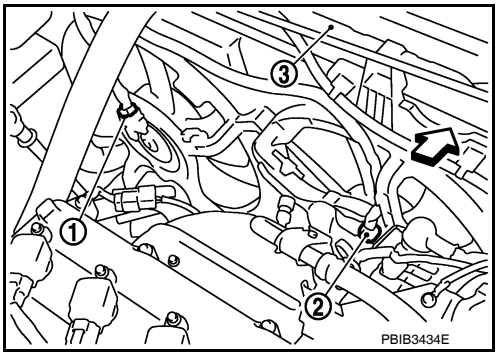

2. Check voltage between cooling fan motor-2 terminal 2, 4 and ground with CONSULT-III or tester.

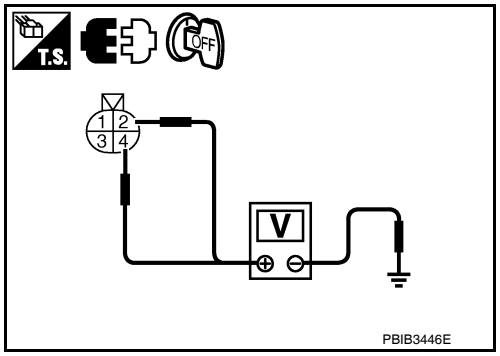

Voltage: Battery voltage

OK or NG

OK >> GO TO 6.
NG >> GO TO 5.

5. DETECT MALFUNCTIONING PART

Check the following.
- 40 A fusible link
- Harness for open or short between cooling fan motor-2 and battery

>> Repair open circuit or short to ground or short to power in harness or connectors.

6. CHECK COOLING FAN MOTORS CIRCUIT FOR OPEN AND SHORT

1. Turn ignition switch OFF.
2. Disconnect IPDM E/R harness connectors E46 and E48.
3. Disconnect cooling fan motor-1 harness connector (1).
- ⇦: Vehicle front
- Cooling fan motor-2 harness connector (2)
- Radiator (3)

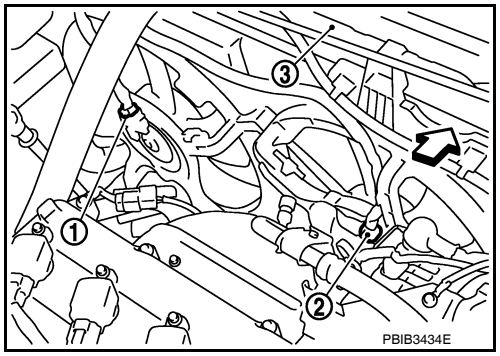

4. Check harness continuity between the following;
cooling fan relay-4 terminal 2 and IPDM E/R terminal 45,
cooling fan relay-4 terminal 5 and IPDM E/R terminal 23,
cooling fan relay-5 terminal 2 and IPDM E/R terminal 6,
cooling fan relay-5 terminal 5 and ground,
cooling fan relay-4 terminal 3 and cooling fan motor-1 terminal 2,
cooling fan motor-1 terminal 2 and IPDM E/R terminal 24,
cooling fan motor-1 terminal 4 and IPDM E/R terminal 20,
cooling fan motor-1 terminal 1, 3 and ground.
IPDM E/R terminal 39, 59 and ground.

Continuity should exist.

cooling fan relay-4 terminal 5 and cooling fan motor-2 terminal 1,
cooling fan relay-5 terminal 3 and cooling fan motor-2 terminal 3,
cooling fan motor-2 terminal 1 and cooling fan relay-4 terminal 5,
Refer to Wiring Diagram.

Continuity should exist.

5. Also check harness for short to ground and short to power.

OK or NG

OK >> GO TO 8.
NG >> GO TO 7.

7. DETECT MALFUNCTIONING PART

Check the following.
- Harness for open or short between cooling fan relay-4 and IPDM E/R
- Harness for open or short between cooling fan relay-5 and IPDM E/R
- Harness for open or short between cooling fan relay-4 and cooling fan motor-1
- Harness for open or short between cooling fan relay-4 and cooling fan motor-2
- Harness for open or short between cooling fan relay-5 and cooling fan motor-2
- Harness for open or short between cooling fan relay-5 and ground
- Harness for open or short between cooling fan motor-1 and ground

- Harness for open or short between IPDM E/R and ground

>> Repair open circuit or short to ground or short to power in harness or connectors.

8. CHECK GROUND CONNECTIONS

Loosen and retighten ground screw on the body.
Refer to EC-711, "Ground Inspection".

- ⇦: Vehicle front
- Body ground (1)

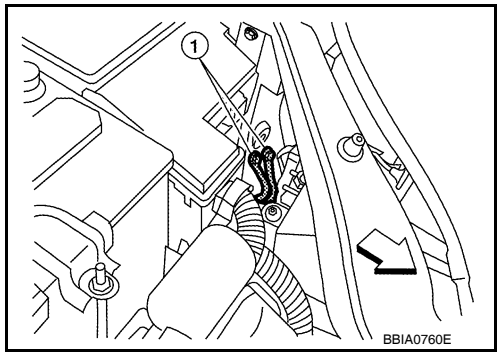

OK or NG

OK >> GO TO 9.
NG >> Repair or replace ground connections.

9. CHECK COOLING FAN RELAYS-4 AND -5

Refer to EC-999, "Component Inspection".

OK or NG

OK >> GO TO 10.
NG >> Replace malfunctioning cooling fan relay.

10. CHECK COOLING FAN MOTORS-1 AND -2

Refer to EC-999, "Component Inspection".

OK or NG

OK >> GO TO 11.
NG >> Replace malfunctioning cooling fan motor.

11. CHECK INTERMITTENT INCIDENT

Perform EC-706.

OK or NG

OK >> Replace IPDM E/R. Refer to PG-27, "Removal and Installation of IPDM E/R".
NG >> Repair or replace harness or connector.

Main 13 Causes of Overheating

INFOID:0000000005285540

Engine	Step	Inspection item	Equipment	Standard	Reference page
OFF	1	• Blocked radiator • Blocked condenser • Blocked radiator grille • Blocked bumper	• Visual	No blocking	—
	2	• Coolant mixture	• Coolant tester	See MA-17, "Anti-freeze Coolant Mixture Ratio".	
	3	• Coolant level	• Visual	Coolant up to MAX level in reservoir tank and radiator filler neck	See CO-11, "Inspection".
	4	• Radiator cap	• Pressure tester	See MA-18, "ENGINE COOLANT : Inspection".	
ON*2	5	• Coolant leaks	• Visual	No leaks	See CO-11, "Inspection".
ON*2	6	• Thermostat	• Touch the upper and lower radiator hoses	Both hoses should be hot	See CO-21, and CO-15
ON*1	7	• Cooling fan	• CONSULT-III	Operating	See trouble diagnosis for DTC P1217 (EC-994, "Diagnosis Procedure").
OFF	8	• Combustion gas leak	• Color checker chemical tester 4 Gas analyzer	Negative	—

Engine	Step	Inspection item	Equipment	Standard	Reference page
ON*3	9	• Coolant temperature gauge	• Visual	Gauge less than 3/4 when driving	—
		• Coolant overflow to reservoir tank	• Visual	No overflow during driving and idling	See MA-20, "ENGINE COOLANT : Changing Engine Coolant".
OFF*4	10	• Coolant return from reservoir tank to radiator	• Visual	Should be initial level in reservoir tank	See CO-11, "Inspection".
OFF	11	• Water control valve	• Remove and inspect the valve	Within the specified value	See CO-24
OFF	12	• Cylinder head	• Straight gauge feeler gauge	0.1 mm (0.004 in) Maximum distortion (warping)	See EM-65.
	13	• Cylinder block and pistons	• Visual	No scuffing on cylinder walls or piston	See EM-80.

*1: Turn the ignition switch ON.

*2: Engine running at 3,000 rpm for 10 minutes.

*3: Drive at 90 km/h (56 MPH) for 30 minutes and then let idle for 10 minutes.

*4: After 60 minutes of cool down time.

For more information, refer to CO-7.

Component Inspection

INFOID:0000000005285541

COOLING FAN MOTORS-1 AND -2

1. Disconnect cooling fan motor harness connectors.
2. Supply cooling fan motor terminals with battery voltage and check operation.

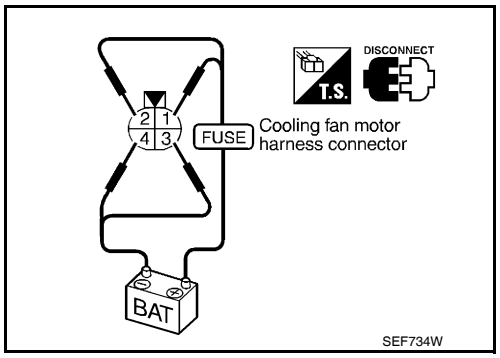

Cooling fan speed	Cooling fan motor terminals	
	(+)	(–)
Middle (MID)	1	3 and 4
	2	3 and 4
	1 and 2	3
	1 and 2	4
High (HI)	1 and 2	3 and 4

Cooling fan motor should operate.
If NG, replace cooling fan motor.

COOLING FAN RELAYS-4 AND -5

Check continuity between terminals 3 and 4.

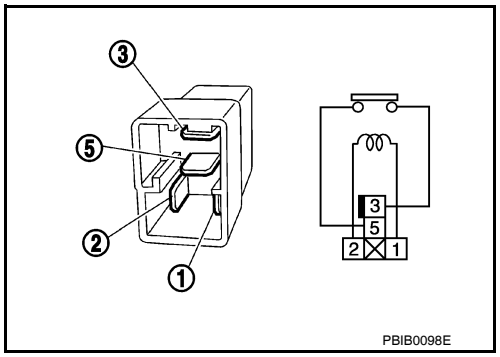

Conditions	Continuity
12 V direct current supply between terminal 1 and 2	Yes
No current supply	No

If NG, replace cooling fan motor.

DTC P1225 TP SENSOR

Component Description

INFOID:0000000005285542

Electric throttle control actuator consists of throttle control motor, throttle position sensor, etc. The throttle position sensor responds to the throttle valve movement.
The throttle position sensor has two sensors. These sensors are a kind of potentiometers which transform the throttle valve position into output voltage, and emit the voltage signal to the ECM. In addition, these sensors detect the opening and closing speed of the throttle valve and feed the voltage signals to the ECM. The ECM judges the current opening angle of the throttle valve from these signals and the ECM controls the throttle control motor to make the throttle valve opening angle properly in response to driving condition.

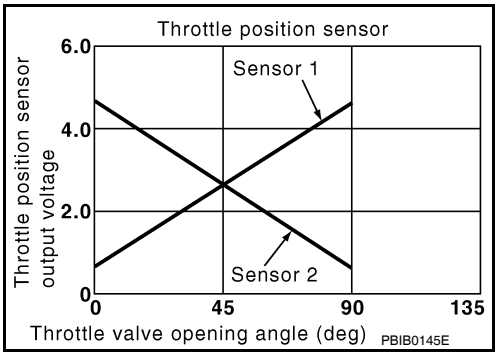

On Board Diagnosis Logic

INFOID:0000000005285543

The MIL will not light up for this self-diagnosis.

DTC No.	Trouble diagnosis name	DTC detecting condition	Possible cause
P1225 1225	Closed throttle position learning performance	Closed throttle position learning value is excessively low.	• Electric throttle control actuator (TP sensor 1 and 2)

DTC Confirmation Procedure

INFOID:0000000005285544

NOTE:
If DTC Confirmation Procedure has been previously conducted, always turn ignition switch OFF and wait at least 10 seconds before conducting the next test.
TESTING CONDITION:
Before performing the following procedure, confirm that battery voltage is more than 10 V at idle.

1. Turn ignition switch OFF and wait at least 10 seconds.
2. Turn ignition switch ON.
3. Check 1st trip DTC.
4. If 1st trip DTC is detected, go to EC-1000, "Diagnosis Procedure".

Diagnosis Procedure

INFOID:0000000005285545

1. CHECK ELECTRIC THROTTLE CONTROL ACTUATOR VISUALLY

1. Turn ignition switch OFF.
2. Remove the intake air duct.
3. Check if foreign matter is caught between the throttle valve (1) and the housing.

- ⇦: Vehicle front
- Illustration shows the view with intake air duct removed.

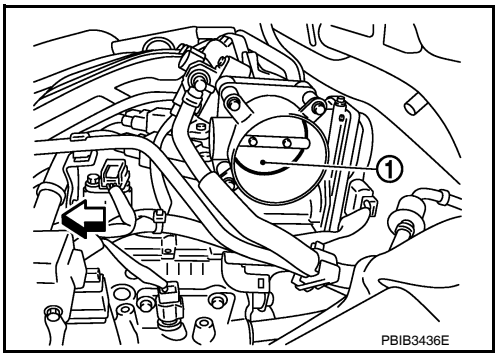

OK or NG

OK >> GO TO 2.
NG >> Remove the foreign matter and clean the electric throttle control actuator inside.

2. REPLACE ELECTRIC THROTTLE CONTROL ACTUATOR

1. Replace the electric throttle control actuator.
2. Perform EC-654, "Throttle Valve Closed Position Learning".
3. Perform EC-654, "Idle Air Volume Learning".

>> **INSPECTION END**

Removal and Installation

INFOID:0000000005285546

ELECTRIC THROTTLE CONTROL ACTUATOR

Refer to EM-18.

DTC P1226 TP SENSOR

Component Description

INFOID:0000000005285547

Electric throttle control actuator consists of throttle control motor, throttle position sensor, etc. The throttle position sensor responds to the throttle valve movement.
The throttle position sensor has two sensors. These sensors are a kind of potentiometers which transform the throttle valve position into output voltage, and emit the voltage signal to the ECM. In addition, these sensors detect the opening and closing speed of the throttle valve and feed the voltage signals to the ECM. The ECM judges the current opening angle of the throttle valve from these signals and the ECM controls the throttle control motor to make the throttle valve opening angle properly in response to driving condition.

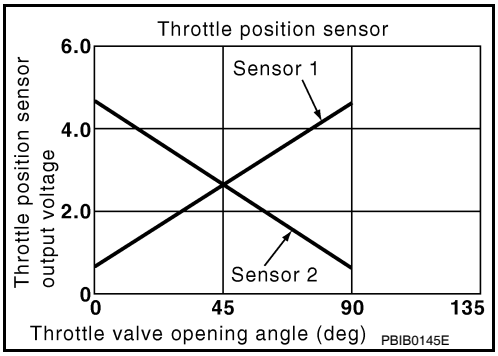

On Board Diagnosis Logic

INFOID:0000000005285548

The MIL will not light up for this self-diagnosis.

DTC No.	Trouble diagnosis name	DTC detecting condition	Possible cause
P1226 1226	Closed throttle position learning performance	Closed throttle position learning is not performed successfully, repeatedly.	• Electric throttle control actuator (TP sensor 1 and 2)

DTC Confirmation Procedure

INFOID:0000000005285549

NOTE:
If DTC Confirmation Procedure has been previously conducted, always turn ignition switch OFF and wait at least 10 seconds before conducting the next test.
TESTING CONDITION:
Before performing the following procedure, confirm that battery voltage is more than 10 V at idle.

1. Turn ignition switch OFF and wait at least 10 seconds.
2. Turn ignition switch ON.
3. Repeat steps 1 and 2 for 32 times.
4. Check 1st trip DTC.
5. If 1st trip DTC is detected, go to EC-1002, "Diagnosis Procedure".

Diagnosis Procedure

INFOID:0000000005285550

1. CHECK ELECTRIC THROTTLE CONTROL ACTUATOR VISUALLY

1. Turn ignition switch OFF.
2. Remove the intake air duct.
3. Check if foreign matter is caught between the throttle valve (1) and the housing.

- ⇦: Vehicle front
- Illustration shows the view with intake air duct removed.

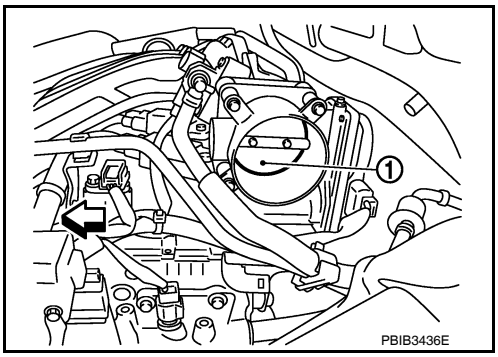

OK or NG

OK >> GO TO 2.
NG >> Remove the foreign matter and clean the electric throttle control actuator inside.

2. REPLACE ELECTRIC THROTTLE CONTROL ACTUATOR

1. Replace the electric throttle control actuator.
2. Perform EC-654, "Throttle Valve Closed Position Learning".
3. Perform EC-654, "Idle Air Volume Learning".

>> **INSPECTION END**

Removal and Installation

INFOID:0000000005285551

ELECTRIC THROTTLE CONTROL ACTUATOR

Refer to EM-18.

DTC P1421 COLD START CONTROL

Description

INFOID:0000000005285552

ECM controls ignition timing and engine idle speed when engine is started with prewarming up condition. This control promotes the activation of three way catalyst by heating the catalyst and reduces emissions.

On Board Diagnosis Logic

INFOID:0000000005285553

DTC No.	Trouble diagnosis name	DTC detecting condition	Possible cause
P1421 1421	Cold start emission reduction strategy monitoring	ECM does not control ignition timing and engine idle speed properly when engine is started with prewarming up condition.	• Lack of intake air volume • Fuel injection system • ECM

DTC Confirmation Procedure

INFOID:0000000005285554

NOTE:
- If DTC Confirmation Procedure has been previously conducted, always turn ignition switch OFF and wait at least 10 seconds before conducting the next test.
- **If DTC P1421 is displayed with other DTC, first perform the trouble diagnosis for other DTC.**

TESTING CONDITION:
Before performing the following procedure, confirm that battery voltage is more than 11 V at idle.

WITH CONSULT-III

1. Turn ignition switch OFF and wait at least 10 seconds.
2. Turn ignition switch ON.
3. Select “DATA MONITOR” mode with CONSULT-III.
4. Check that the “COOLAN TEMP/S” indication is between 4°C (39°F) and 36°C (97°F).
   If “COOLAN TEMP/S” indication is within the specified value, go to the following step.
   If “COOLAN TEMP/S” indication is out of the specified value, cool engine down or warm engine up and go to step 1.
5. Start engine and let it idle for 5 minutes.
6. Check 1st trip DTC.
7. If 1st trip DTC is detected, go to EC-1004, "Diagnosis Procedure".

WITH GST

Follow the procedure “WITH CONSULT-III” above.

Diagnosis Procedure

INFOID:0000000005285555

1. PERFORM IDLE AIR VOLUME LEARNING

Perform EC-654, "Idle Air Volume Learning".
Is Idle Air Volume Learning carried out successfully?

Yes or No

Yes >> GO TO 2.
No >> Follow the instruction of Idle Air Volume Learning.

2. CHECK INTAKE SYSTEM

Check for the cause of intake air volume lacking. Refer to the following.
- Crushed intake air passage
- Intake air passage clogging

OK or NG

OK >> GO TO 3.
NG >> Repair or replace malfunctioning part

3. CHECK FUEL INJECTION SYSTEM FUNCTION

Perform EC-828, "DTC Confirmation Procedure" for DTC P0171.

OK or NG

OK >> GO TO 4.
NG >> Go to EC-831, "Diagnosis Procedure" for DTC P0171.

4. PERFORM DTC CONFIRMATION PROCEDURE

1. Erase DTC.
2. **Perform DTC Confirmation Procedure.**
   See EC-1004, "DTC Confirmation Procedure".
3. Is the 1st trip DTC P1421 displayed again?

Yes or No

Yes >> GO TO 5.
No >> **INSPECTION END**

5. REPLACE ECM

1. Replace ECM.
2. Perform initialization of NVIS (NATS) system and registration of all NVIS (NATS) ignition key IDs.
   Refer to BL-171, "ECM Re-communicating Function".
3. Perform EC-654, "VIN Registration".
4. Perform EC-654, "Accelerator Pedal Released Position Learning".
5. Perform EC-654, "Throttle Valve Closed Position Learning".
6. Perform EC-654, "Idle Air Volume Learning".

>> **INSPECTION END**

DTC P1564 ASCD STEERING SWITCH

Component Description

INFOID:0000000005285556

ASCD steering switch has variant values of electrical resistance for each button. ECM reads voltage variation of switch, and determines which button is operated.

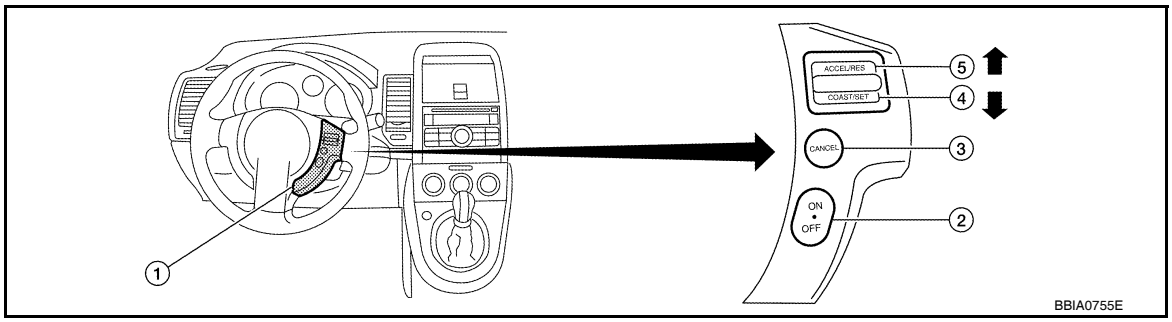

1. ASCD steering switch
2. MAIN switch
3. CANCEL switch
4. SET/COAST switch
5. RESUME/ACCELERATE switch

Refer to EC-597 for the ASCD function.

CONSULT-III Reference Value in Data Monitor Mode

INFOID:0000000005285557

Specification data are reference values.

Monitor item	Condition		Specification
MAIN SW	• Ignition switch: ON	MAIN switch: Pressed	ON
		MAIN switch: Released	OFF
CANCEL SW	• Ignition switch: ON	CANCEL switch: Pressed	ON
		CANCEL switch: Released	OFF
RESUME/ACC SW	• Ignition switch: ON	RESUME/ACCELERATE switch: Pressed	ON
		RESUME/ACCELERATE switch: Released	OFF
SET SW	• Ignition switch: ON	SET/COAST switch: Pressed	ON
		SET/COAST switch: Released	OFF

On Board Diagnosis Logic

INFOID:0000000005285558

- **This self-diagnosis has the one trip detection logic.**
- **The MIL will not light up for this self-diagnosis.**

NOTE:
If DTC P1564 is displayed with DTC P0605, first perform the trouble diagnosis for DTC P0605. Refer to EC-973.

DTC No.	Trouble Diagnosis Name	DTC Detecting Condition	Possible Cause
P1564 1564	ASCD steering switch	• An excessively high voltage signal from the ASCD steering switch is sent to ECM. • ECM detects that input signal from the ASCD steering switch is out of the specified range. • ECM detects that the ASCD steering switch is stuck ON.	• Harness or connectors (ASCD switch circuit is open or shorted.) • ASCD steering switch • ECM

DTC Confirmation Procedure

INFOID:0000000005285559

NOTE:
If DTC Confirmation Procedure has been previously conducted, always turn ignition switch OFF and wait at least 10 seconds before conducting the next test.

1. Turn ignition switch ON.
2. Wait at least 10 seconds.
3. Press MAIN switch for at least 10 seconds, then release it and wait at least 10 seconds.
4. Press CANCEL switch for at least 10 seconds, then release it and wait at least 10 seconds.
5. Press RESUME/ACCELERATE switch for at least 10 seconds, then release it and wait at least 10 seconds.
6. Press SET/COAST switch for at least 10 seconds, then release it and wait at least 10 seconds.
7. Check DTC.
8. If DTC is detected, go to EC-1009, "Diagnosis Procedure".

Wiring Diagram

INFOID:0000000005285560

EC-ASC/SW-01

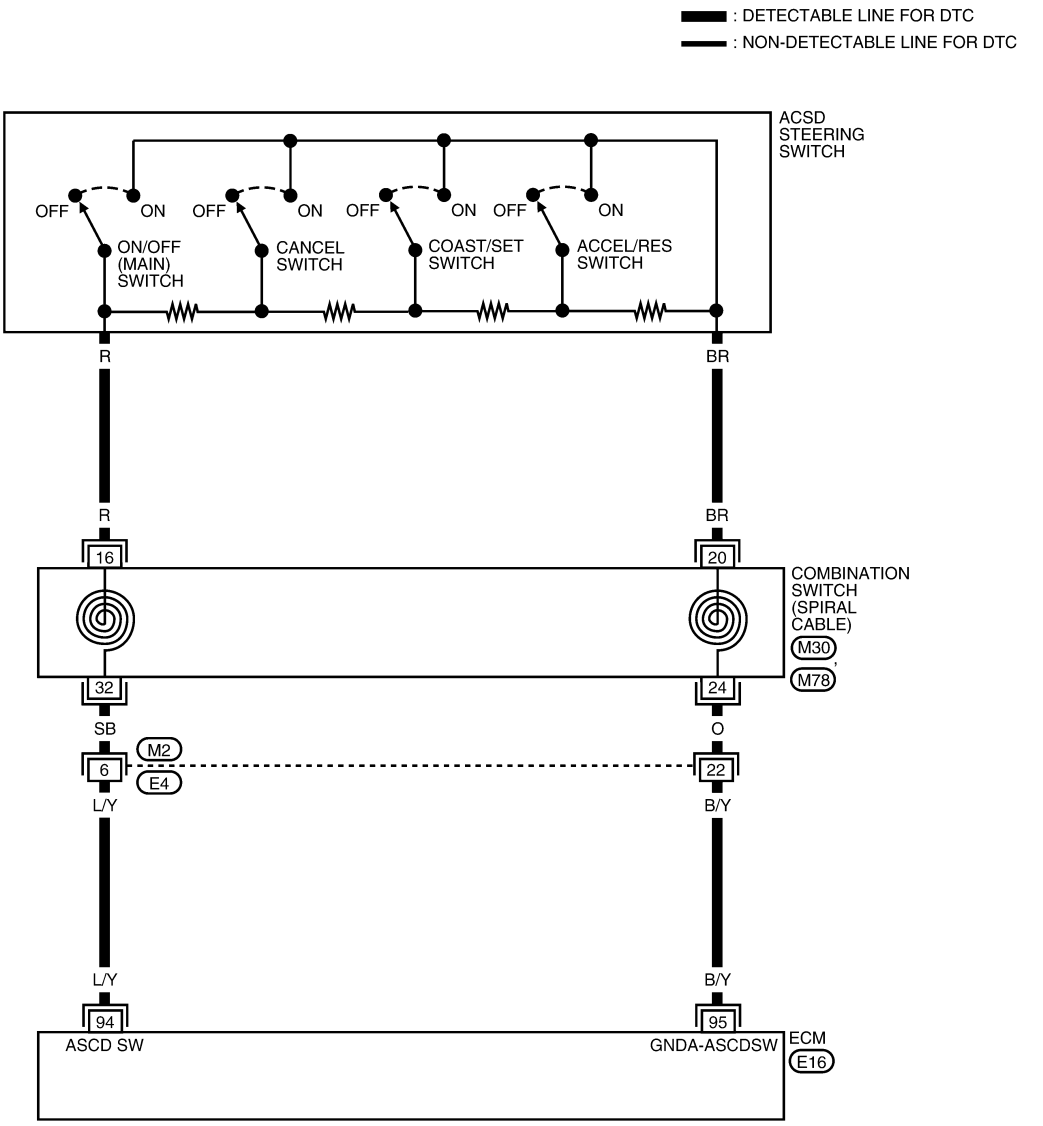

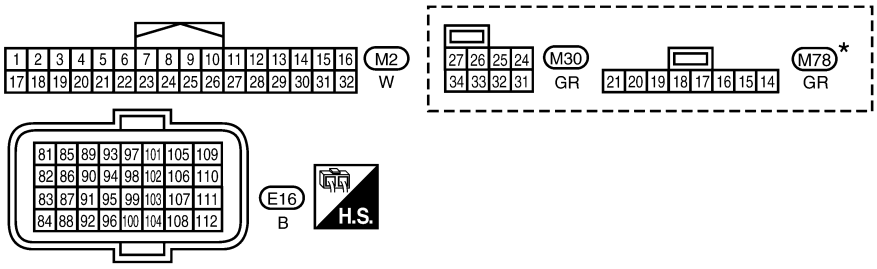

★: THIS CONNECTOR IS NOT SHOWN IN "HARNESS LAYOUT" OF PG SECTION.

BBWA2894E

Specification data are reference values and are measured between each terminal and ground.

CAUTION:

Do not use ECM ground terminals when measuring input/output voltage. Doing so may result in damage to the ECM's transistor. Use a ground other than ECM terminals, such as the ground.

TERMINAL NO.	WIRE COLOR	ITEM	CONDITION	DATA (DC Voltage)
94	L/Y	ASCD steering switch	**[Ignition switch: ON]** • ASCD steering switch: OFF	Approximately 4 V
			[Ignition switch: ON] • MAIN switch: Pressed	Approximately 0 V
			[Ignition switch: ON] • CANCEL switch: Pressed	Approximately 1 V
			[Ignition switch: ON] • RESUME/ACCELERATE switch: Pressed	Approximately 3 V
			[Ignition switch: ON] • SET/COAST switch: Pressed	Approximately 2 V
95	B/Y	Sensor ground	**[Engine is running]** • **Warm-up condition** • Idle speed	Approximately 0 V

Diagnosis Procedure

INFOID:0000000005285561

1. CHECK GROUND CONNECTIONS

1. Turn ignition switch OFF.
2. Loosen and retighten ground screws on the body.
   Refer to EC-711, "Ground Inspection".

- ⇦: Vehicle front
- Body ground (1)

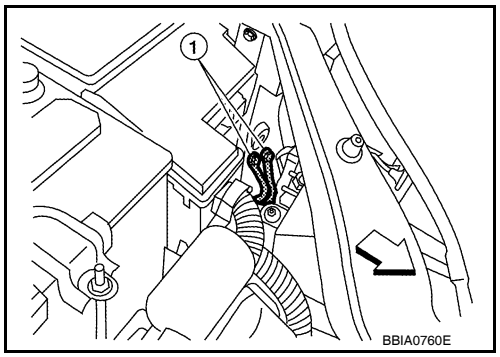

OK or NG

OK >> GO TO 2.
NG >> Repair or replace ground connections.

2. CHECK ASCD STEERING SWITCH CIRCUIT

With CONSULT-III

1. Turn ignition switch ON.
2. Select “MAIN SW”, “RESUME/ACC SW”, “SET SW and “CANCEL SW” in “DATA MONITOR” mode with CONSULT-III.
3. Check each item indication under the following conditions.

Switch	Monitor item	Condition	Indication
MAIN switch	MAIN SW	Pressed	ON
		Released	OFF
CANCEL switch	CANCEL SW	Pressed	ON
		Released	OFF
RESUME/ACCELERATE switch	RESUME/ACC SW	Pressed	ON
		Released	OFF
SET/COAST switch	SET SW	Pressed	ON
		Released	OFF

Without CONSULT-III

1. Turn ignition switch ON.

2. Check voltage between ECM terminal 94 and ground with pressing each button.

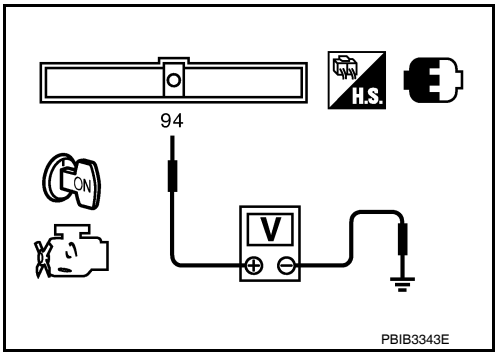

Switch	Condition	Voltage (V)
MAIN switch	Pressed	Approx. 0
	Released	Approx. 4.0
CANCEL switch	Pressed	Approx. 1.0
	Released	Approx. 4.0
RESUME/ACCELERATE switch	Pressed	Approx. 3.0
	Released	Approx. 4.0
SET/COAST switch	Pressed	Approx. 2.0
	Released	Approx. 4.0

OK or NG

OK >> GO TO 8.
NG >> GO TO 3.

3. CHECK ASCD STEERING SWITCH GROUND CIRCUIT FOR OPEN AND SHORT

1. Turn ignition switch OFF.
2. Disconnect combination switch harness connector M78.
3. Disconnect ECM harness connector.
4. Check harness continuity between combination switch terminal 20 (unit side) and ECM terminal 95. Refer to Wiring Diagram.

Continuity should exist.

5. Also check harness for short to ground or short to power.

OK or NG

OK >> GO TO 5.
NG >> GO TO 4.

4. DETECT MALFUNCTIONING PART

Check the following.
- Harness connectors M2, E4
- Combination switch (spiral cable)
- Harness for open and short between ECM and combination switch

>> Repair open circuit or short to ground or short to power in harness or connectors.

5. CHECK ASCD STEERING SWITCH INPUT SIGNAL CIRCUIT FOR OPEN AND SHORT

1. Check harness continuity between ECM terminal 94 and combination switch terminal 16. Refer to Wiring Diagram.

Continuity should exist.

2. Also check harness for short to ground and short to power.

OK or NG

OK >> GO TO 7.
NG >> GO TO 6.

6. DETECT MALFUNCTIONING PART

Check the following.
- Harness connectors M2, E4
- Combination switch (spiral cable)
- Harness for open and short between ECM and combination switch

>> Repair open circuit or short to ground or short to power in harness or connectors.

7. CHECK ASCD STEERING SWITCH

Refer to EC-1011, "Component Inspection".

OK or NG

OK >> GO TO 8.
NG >> Replace ASCD steering switch.

8. CHECK INTERMITTENT INCIDENT

Refer to EC-706.

>> **INSPECTION END**

Component Inspection

INFOID:0000000005285562

ASCD STEERING SWITCH

1. Disconnect combination switch (spiral cable) harness connector M78.
2. Check continuity between combination switch (spiral cable) terminals 16 and 20 with pushing each switch.

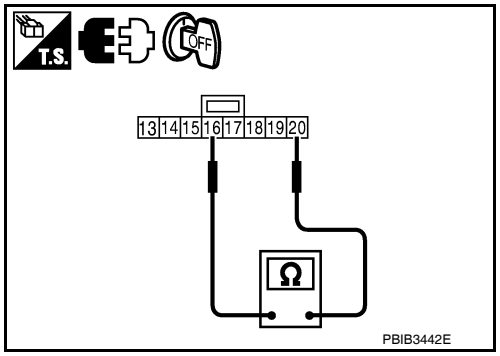

Switch	Condition	Resistance (Ω)
MAIN switch	Pressed	Approx. 0
	Released	Approx. 4,000
CANCEL switch	Pressed	Approx. 250
	Released	Approx. 4,000
RESUME/ACCELERATE switch	Pressed	Approx. 1,480
	Released	Approx. 4,000
SET/COAST switch	Pressed	Approx. 660
	Released	Approx. 4,000

If NG, replace ASCD steering switch.

DTC P1572 ASCD BRAKE SWITCH

Component Description

INFOID:0000000005285563

When the brake pedal is depressed, ASCD brake switch (1) is turned OFF and stop lamp switch (2) is turned ON. ECM detects the state of the brake pedal (3) by this input of two kinds (ON/OFF signal). Refer to EC-597 for the ASCD function.

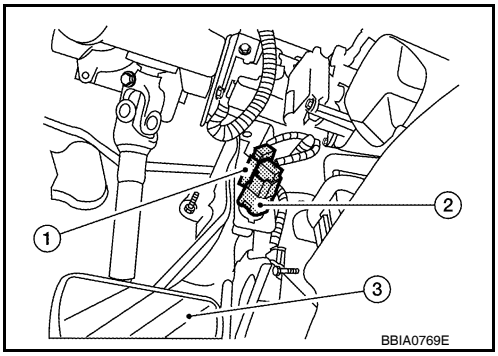

CONSULT-III Reference Value in Data Monitor Mode

INFOID:0000000005285564

Specification data are reference values.

Monitor item	Condition		Specification
BRAKE SW1 (ASCD brake switch)	• Ignition switch: ON	• Brake pedal: Fully released (CVT) • Brake pedal and clutch pedal: Fully released (M/T)	ON
		• Brake pedal: Slightly depressed (CVT) • Brake pedal and/or clutch pedal: Slightly depressed (M/T)	OFF
BRAKE SW2 (Stop lamp switch)	• Ignition switch: ON	Brake pedal: Fully released	OFF
		Brake pedal: Slightly depressed	ON

On Board Diagnosis Logic

INFOID:0000000005285565

- **This self-diagnosis has the one trip detection logic.**
- **The MIL will not light up for this self-diagnosis.**

NOTE:

- **If DTC P1572 is displayed with DTC P0605, first perform the trouble diagnosis for DTC P0605. Refer to EC-973.**
- **This self-diagnosis has the one trip detection logic. When malfunction A is detected, DTC is not stored in ECM memory. And in that case, 1st trip DTC and 1st trip freeze frame data are displayed. 1st trip DTC is erased when ignition switch OFF. And even when malfunction A is detected in two consecutive trips, DTC is not stored in ECM memory.**

DTC No.	Trouble Diagnosis Name	DTC Detecting Condition		Possible Cause
P1572 1572	ASCD brake switch	A)	When the vehicle speed is above 30km/h (19 MPH), ON signals from the stop lamp switch and the ASCD brake switch are sent to ECM at the same time.	• Harness or connectors (Stop lamp switch circuit is shorted.) • Harness or connectors (ASCD brake switch circuit is shorted.) • Harness or connectors (ASCD clutch switch circuit is shorted.) (M/T) • Stop lamp switch • ASCD brake switch • ASCD clutch switch (M/T) • Incorrect stop lamp switch installation • Incorrect ASCD brake switch installation • Incorrect ASCD clutch switch installation (M/T) • ECM
		B)	ASCD brake switch signal is not sent to ECM for extremely long time while the vehicle is driving	

DTC Confirmation Procedure

INFOID:0000000005285566

CAUTION:
Always drive vehicle at a safe speed.
NOTE:
- If DTC Confirmation Procedure has been previously conducted, always turn ignition switch OFF and wait at least 10 seconds before conducting the next test.
- Procedure for malfunction B is not described here. It takes extremely long time to complete procedure for malfunction B. By performing procedure for malfunction A, the incident that causes malfunction B can be detected.

TESTING CONDITION:
Steps 3 and 5 may be conducted with the drive wheels lifted in the shop or by driving the vehicle. If a road test is expected to be easier, it is unnecessary to lift the vehicle.

1. Start engine.
2. Press MAIN switch and make sure that CRUISE indicator lights up.
3. Drive the vehicle for at least 5 consecutive seconds under the following condition.

Vehicle speed	More than 30 km/h (19 MPH)
Shift lever	Suitable position

4. Check 1st trip DTC.
   If 1st trip DTC is detected, go to EC-1015, "Diagnosis Procedure".
   If 1st trip DTC is not detected, go to the following step.
5. Drive the vehicle for at least 5 consecutive seconds under the following condition.

Vehicle speed	More than 30 km/h (19 MPH)
Shift lever	Suitable position
Driving location	Depress the brake pedal for more than 5 seconds so as not to come off from the above-mentioned vehicle speed.

6. Check 1st trip DTC.
7. If 1st trip DTC is detected, go to EC-1015, "Diagnosis Procedure".

Wiring Diagram

INFOID:0000000005285567

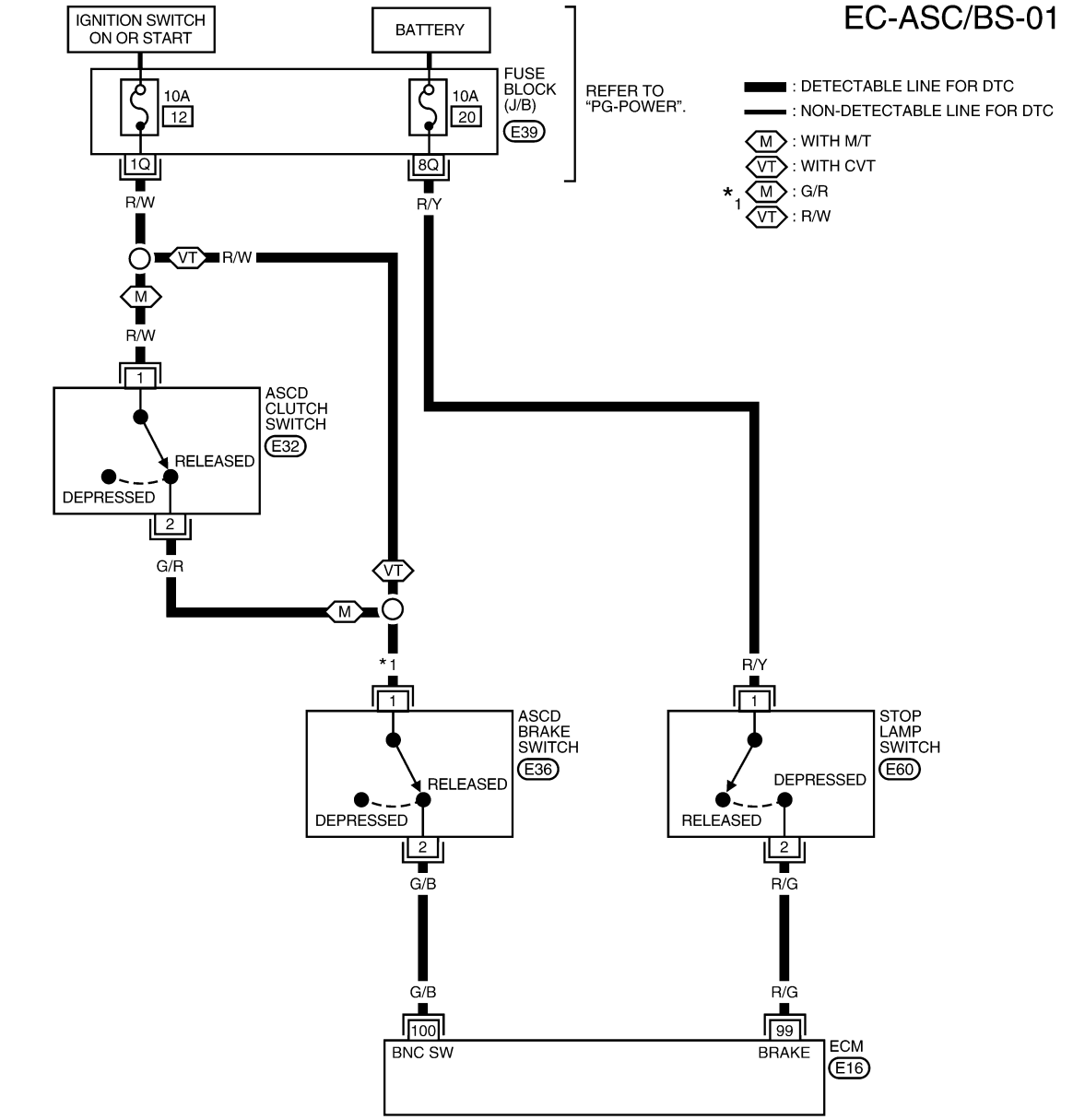

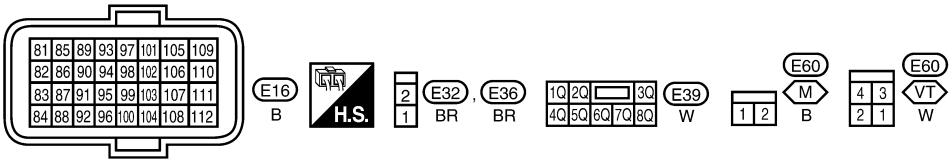

AABWA0251GB

Specification data are reference values and are measured between each terminal and ground.

CAUTION:

Do not use ECM ground terminals when measuring input/output voltage. Doing so may result in damage to the ECM's transistor. Use a ground other than ECM terminals, such as the ground.

TERMINAL NO.	WIRE COLOR	ITEM	CONDITION	DATA (DC Voltage)
99	R/G	Stop lamp switch	**[Ignition switch: ON]** • Brake pedal: Fully released	Approximately 0 V
			[Ignition switch: ON] • Brake pedal: Slightly depressed	BATTERY VOLTAGE (11 - 14 V)
100	G/B	ASCD brake switch	• Brake pedal: Slightly depressed (CVT) • Brake pedal and clutch pedal: Fully released (M/T)	BATTERY VOLTAGE (11 - 14 V)
			• Brake pedal: Slightly depressed (CVT) • Brake pedal and/or clutch pedal: Slightly depressed (M/T)	Approximately 0 V

Diagnosis Procedure

INFOID:0000000005285568

1. CHECK OVERALL FUNCTION-I

With CONSULT-III

1. Turn ignition switch ON.
2. Select “BRAKE SW1” in “DATA MONITOR” mode with CONSULT-III.
3. Check “BRAKE SW1” indication under the following conditions.

M/T models

Condition	Indication
Clutch pedal and/or brake pedal: Slightly depressed	OFF
Clutch pedal and brake pedal: Fully released	ON

CVT models

Condition	Indication
Brake pedal: Slightly depressed	OFF
Brake pedal: Fully released	ON

Without CONSULT-III

1. Turn ignition switch ON.
2. Check voltage between ECM terminal 100 and ground under the following conditions.

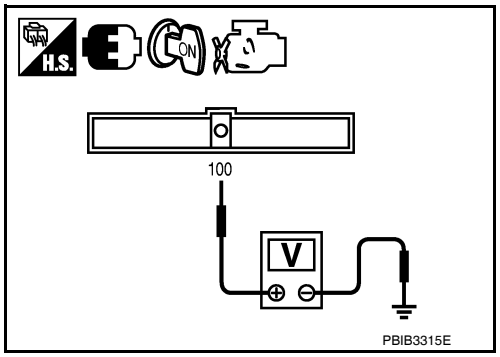

M/T models

Condition	Voltage
Clutch pedal and/or brake pedal: Slightly depressed	Approximately 0 V
Clutch pedal and brake pedal: Fully released	Battery voltage

CVT models

Condition	Voltage
Brake pedal: Slightly depressed	Approximately 0 V
Brake pedal: Fully released	Battery voltage

OK or NG

OK >> GO TO 2.
NG >> GO TO 3.

2. CHECK OVERALL FUNCTION-II

With CONSULT-III

Check “BRAKE SW2” indication in “DATA MONITOR” mode.

Condition	Indication
Brake pedal: Fully released	OFF
Brake pedal: Slightly depressed	ON

Without CONSULT-III

Check voltage between ECM terminal 99 and ground under the following conditions.

Condition	Voltage
Brake pedal: Fully released	Approximately 0 V
Brake pedal: Slightly depressed	Battery voltage

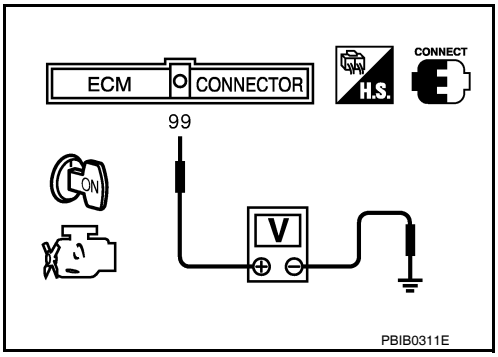

OK or NG

OK >> GO TO 15.
NG >> GO TO 11.

3. CHECK ASCD BRAKE SWITCH POWER SUPPLY

1. Turn ignition switch OFF.
2. Disconnect ASCD brake switch (1) harness connector.
- Stop lamp switch (2)
- Brake pedal (3)
3. Turn ignition switch ON.

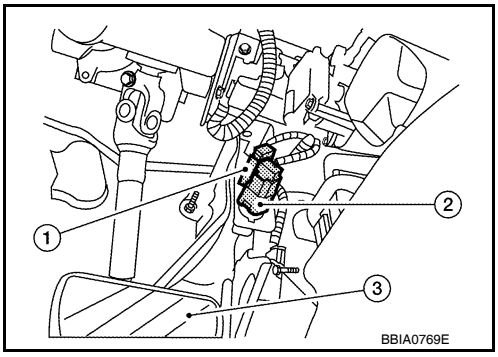

4. Check voltage between ASCD brake switch terminal 1 and ground with CONSULT-III or tester.

Voltage : Battery voltage

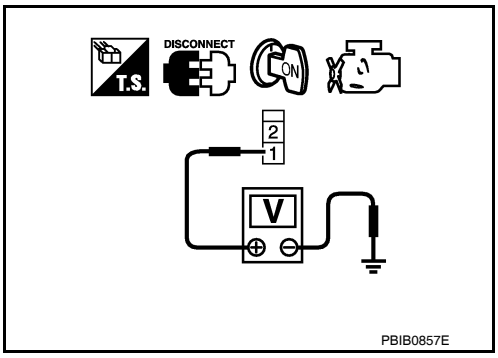

OK or NG

OK >> GO TO 8.
NG (M/T models)>>GO TO 4.
NG (CVT models)>>GO TO 6.

4. CHECK ASCD CLUTCH SWITCH POWER SUPPLY CIRCUIT

1. Turn ignition switch OFF.

2. Disconnect ASCD clutch switch (1) harness connector.
- Clutch pedal (2)
3. Turn ignition switch ON.

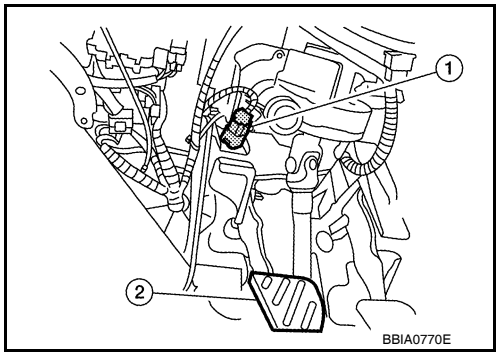

4. Check voltage between ASCD clutch switch terminal 1 and ground with CONSULT-III or tester.

Voltage: Battery voltage

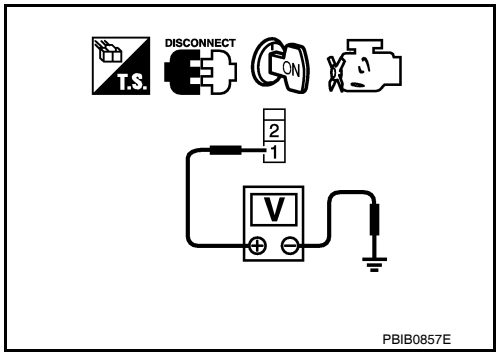

OK or NG

OK >> GO TO 7.
NG >> GO TO 5.

5. DETECT MALFUNCTIONING PART

Check the following.
- 10 A fuse
- Harness for open or short between ASCD clutch switch and fuse

>> Repair open circuit or short to ground or short to power in harness or connectors.

6. DETECT MALFUNCTIONING PART

Check the following.
- 10 A fuse
- Harness for open or short between ASCD brake switch and fuse

>> Repair open circuit or short to ground or short to power in harness or connectors.

7. CHECK ASCD CLUTCH SWITCH INPUT SIGNAL CIRCUIT FOR OPEN AND SHORT

1. Turn ignition switch OFF.
2. Check harness continuity between ASCD brake switch terminal 1 and ASCD clutch switch terminal 2. Refer to Wiring Diagram.

Continuity should exist.

3. Also check harness for short to ground and short to power.

OK or NG

OK >> GO TO 10.
NG >> Repair open circuit or short to ground or short to power in harness or connectors.

8. CHECK ASCD BRAKE SWITCH INPUT SIGNAL CIRCUIT FOR OPEN AND SHORT

1. Turn ignition switch OFF.
2. Disconnect ECM harness connector.
3. Check harness continuity between ECM terminal 100 and ASCD brake switch terminal 2. Refer to Wiring Diagram.

Continuity should exist.

4. Also check harness for short to ground and short to power.

OK or NG

OK >> GO TO 9.
NG >> Repair open circuit or short to ground or short to power in harness or connectors.

9. CHECK ASCD BRAKE SWITCH

Refer to EC-1019, "Component Inspection".

OK or NG

OK >> GO TO 15.
NG >> Replace ASCD brake switch.

10. CHECK ASCD CLUTCH SWITCH

Refer to EC-1019, "Component Inspection"

OK or NG

OK >> GO TO 15.
NG >> Replace ASCD clutch switch.

11. CHECK STOP LAMP SWITCH POWER SUPPLY CIRCUIT

1. Turn ignition switch OFF.
2. Disconnect stop lamp switch (2) harness connector.
- ASCD brake switch (1)
- Brake pedal (3)

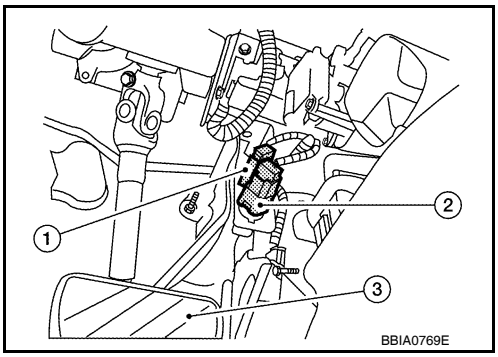

3. Check voltage between stop lamp switch terminal 1 and ground with CONSULT -III or tester.

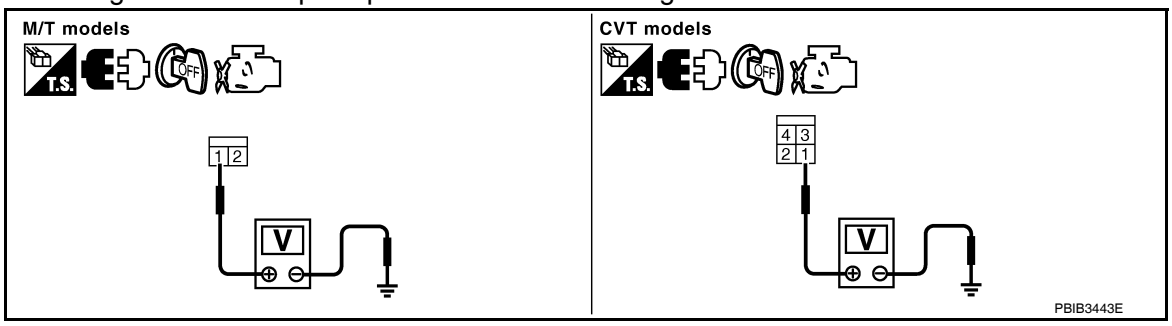

Voltage: Battery voltage

OK or NG

OK >> GO TO 13.
NG >> GO TO 12.

12. DETECT MALFUNCTIONING PART

Check the following.
- 10 A fuse
- Harness for open or short between stop lamp switch and battery

>> Repair open circuit or short to ground or short to power in harness or connectors.

13. CHECK STOP LAMP SWITCH INPUT SIGNAL CIRCUIT FOR OPEN AND SHORT

1. Disconnect ECM harness connector.
2. Check harness continuity between ECM terminal 99 and stop lamp switch terminal 2.
   Refer to Wiring Diagram.

Continuity should exist.

3. Also check harness for short to ground and short to power.

OK or NG

OK >> GO TO 14.
NG >> Repair open circuit or short to ground or short to power in harness or connectors.

14. CHECK STOP LAMP SWITCH

Refer to EC-1019, "Component Inspection"

OK or NG

OK >> GO TO 15.
NG >> Replace stop lamp switch.

15. CHECK INTERMITTENT INCIDENT

Refer to EC-706.

>> **INSPECTION END**

Component Inspection

INFOID:0000000005285569

ASCD BRAKE SWITCH

1. Turn ignition switch OFF.
2. Disconnect ASCD brake switch harness connector.
3. Check continuity between ASCD brake switch terminals 1 and 2 under the following conditions.

Condition	Continuity
Brake pedal: Fully released.	Should exist.
Brake pedal: Slightly depressed.	Should not exist.

If NG, adjust ASCD brake switch installation, refer to BR-8, and perform step 3 again.

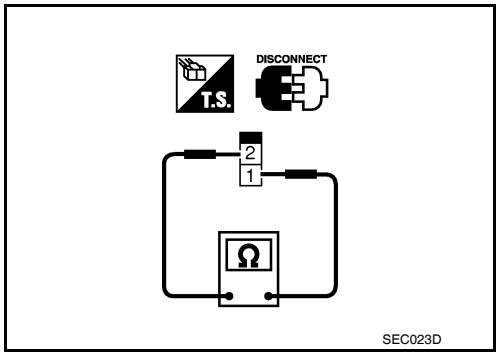

ASCD CLUTCH SWITCH

1. Turn ignition switch OFF.
2. Disconnect ASCD clutch switch harness connector.
3. Check continuity between ASCD clutch switch terminals 1 and 2 under the following conditions.

Condition	Continuity
Clutch pedal: Fully released.	Should exist.
Clutch pedal: Slightly depressed.	Should not exist.

If NG, adjust ASCD clutch switch installation, refer to CL-6, and perform step 3 again.

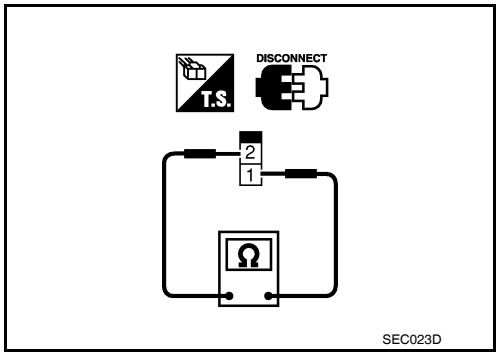

STOP LAMP SWITCH

1. Turn ignition switch OFF.
2. Disconnect stop lamp switch harness connector.

3. Check continuity between stop lamp switch terminals 1 and 2 under the following conditions.

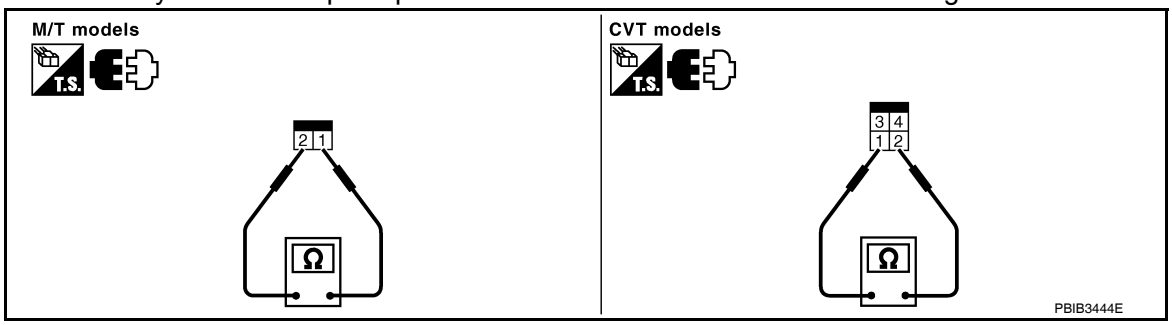

Condition	Continuity
Brake pedal: Fully released.	Should not exist.
Brake pedal: Slightly depressed.	Should exist.

If NG, adjust stop lamp switch installation, refer to BR-8, and perform step 3 again.

DTC P1574 ASCD VEHICLE SPEED SENSOR

Component Description

INFOID:0000000005285570

The ECM receives two vehicle speed signals via CAN communication line. One is sent from “ABS actuator and electric unit (control unit)” or combination meter, and the other is from TCM (Transmission control module). The ECM uses these signals for ASCD control. Refer to EC-597 for ASCD functions.

On Board Diagnosis Logic

INFOID:0000000005285571

- **This self-diagnosis has the one trip detection logic.**
- **The MIL will not light up for this self-diagnosis.**

NOTE:
- **If DTC P1574 is displayed with DTC UXXXX, first perform the trouble diagnosis for DTC UXXXX.**
- **If DTC P1574 is displayed with DTC P0500, first perform the trouble diagnosis for DTC P0500. Refer to EC-964.**
- **If DTC P1574 is displayed with DTC P0605, first perform the trouble diagnosis for DTC P0605. Refer to EC-973.**
- **If DTC P1574 is displayed with DTC P0607, first perform the trouble diagnosis for DTC P0607. Refer to EC-975.**

DTC No.	Trouble Diagnosis Name	DTC Detecting Condition	Possible Cause
P1574 1574	ASCD vehicle speed sensor	ECM detects a difference between two vehicle speed signals is out of the specified range.	• Harness or connectors (CAN communication line is open or shorted.) • TCM (CVT models) • ABS actuator and electric unit (control unit) • Combination meter • ECM

DTC Confirmation Procedure

INFOID:0000000005285572

CAUTION:
Always drive vehicle at a safe speed.
NOTE:
If DTC Confirmation Procedure has been previously conducted, always turn ignition switch OFF and wait at least 10 seconds before conducting the next test.
TESTING CONDITION:
Step 3 may be conducted with the drive wheels lifted in the shop or by driving the vehicle. If a road test is expected to be easier, it is unnecessary to lift the vehicle.

WITH CONSULT-III

1. Start engine.
2. Select “DATA MONITOR” mode with CONSULT-III.
3. Drive the vehicle at more than 40 km/h (25MPH).
4. Check DTC.
5. If DTC is detected, go to EC-1021, "Diagnosis Procedure".

WITH GST

Follow the procedure “WITH CONSULT-III” above.

Diagnosis Procedure

INFOID:0000000005285573

1. CHECK DTC WITH TCM

Check DTC with TCM. Refer to CVT-24.

OK or NG

OK >> GO TO 2.
NG >> Perform trouble shooting relevant to DTC indicated.

2. CHECK DTC WITH “ABS ACTUATOR AND ELECTRIC UNIT”

Refer to BRC-10.

OK or NG

OK >> GO TO 3.
NG >> Repair or replace.

3. CHECK COMBINATION METER

Check combination meter function.
Refer to DI-6.

>> **INSPECTION END**

DTC P1715 INPUT SPEED SENSOR

Description

INFOID:0000000005285574

ECM receives input speed sensor signal from TCM through CAN communication line. ECM uses this signal for engine control.

CONSULT-III Reference Value in Data Monitor Mode

INFOID:0000000005285575

Specification data are reference values.

Monitor item	Condition	Specification
I/P PULLY SPD	• Vehicle speed: More than 20 km/h (12MPH)	Almost the same speed as the tachometer indication

On Board Diagnosis Logic

INFOID:0000000005285576

NOTE:
- **If DTC P1715 is displayed with DTC UXXXX, first perform the trouble diagnosis for DTC UXXXX.**
- **If DTC P1715 is displayed with DTC P0335, first perform the trouble diagnosis for DTC P0335. Refer to EC-870.**
- **If DTC P1715 is displayed with DTC P0340 first perform the trouble diagnosis for DTC P0340. Refer to EC-876.**
- **If DTC P1715 is displayed with DTC P0605, first perform the trouble diagnosis for DTC P0605. Refer to EC-973.**
- **If DTC P1715 is displayed with DTC P0607, first perform the trouble diagnosis for DTC P0607. Refer to EC-975.**

The MIL will not light up for this self-diagnosis.

DTC No.	Trouble diagnosis name	DTC detecting condition	Possible cause
P1715 1715	Input speed sensor (TCM output)	Input speed sensor signal is different from the theoretical value calculated by ECM from output speed sensor signal and engine rpm signal.	• Harness or connectors (CAN communication line is open or shorted) • Harness or connectors (Input speed sensor circuit is open or shorted) • TCM

DTC Confirmation Procedure

INFOID:0000000005285577

CAUTION:
Always drive vehicle at a safe speed.
NOTE:
If DTC Confirmation Procedure has been previously conducted, always turn ignition switch OFF and wait at least 10 seconds before conducting the next test.

WITH CONSULT-III

1. Turn ignition switch ON.
2. Select “DATA MONITOR” mode with CONSULT-III.
3. Start engine.
4. Drive vehicle at a speed of more than 50 km/h (31 MPH) for at least 5 seconds.
5. Check 1st trip DTC.
6. If 1st trip DTC is detected, go to EC-1023, "Diagnosis Procedure".

WITH GST

Follow the procedure “WITH CONSULT-III” above.

Diagnosis Procedure

INFOID:0000000005285578

1. CHECK DTC WITH TCM

Check DTC with TCM. Refer to CVT-24.

OK or NG

OK >> GO TO 2.
NG >> Perform trouble shooting relevant to DTC indicated.

2. REPLACE TCM

Replace TCM. Refer to CVT-27.

>> **INSPECTION END**

DTC P1805 BRAKE SWITCH

Description

INFOID:0000000005285579

Brake switch signal is applied to the ECM through the stop lamp switch when the brake pedal is depressed. This signal is used mainly to decrease the engine speed when the vehicle is driving.

CONSULT-III Reference Value in Data Monitor Mode

INFOID:0000000005285580

Specification data are reference values.

Monitor item	Condition		Specification
BRAKE SW	• Ignition switch: ON	Brake pedal: Fully released	OFF
		Brake pedal: Slightly depressed	ON

On Board Diagnosis Logic

INFOID:0000000005285581

The MIL will not light up for this self-diagnosis.

DTC No.	Trouble diagnosis name	DTC detecting condition	Possible cause
P1805 1805	Brake switch	A brake switch signal is not sent to ECM for extremely long time while the vehicle is driving.	• Harness or connectors (Stop lamp switch circuit is open or shorted.) • Stop lamp switch

FAIL-SAFE MODE

When the malfunction is detected, the ECM enters in fail-safe mode.

Engine operation condition in fail-fail safe mode	
ECM controls the electric throttle control actuator by regulating the throttle opening to a small range. Therefore, acceleration will be poor.	
Vehicle condition	Driving condition
Engine: Idling	Normal
Accelerating	Poor acceleration

DTC Confirmation Procedure

INFOID:0000000005285582

1. Turn ignition switch ON.
2. Fully depress the brake pedal for at least 5 seconds.
3. Erase the DTC with CONSULT-III.
4. Check 1st trip DTC.
5. If 1st trip DTC is detected, go to EC-1027, "Diagnosis Procedure".

Wiring Diagram

INFOID:0000000005285583

EC-BRK/SW-01

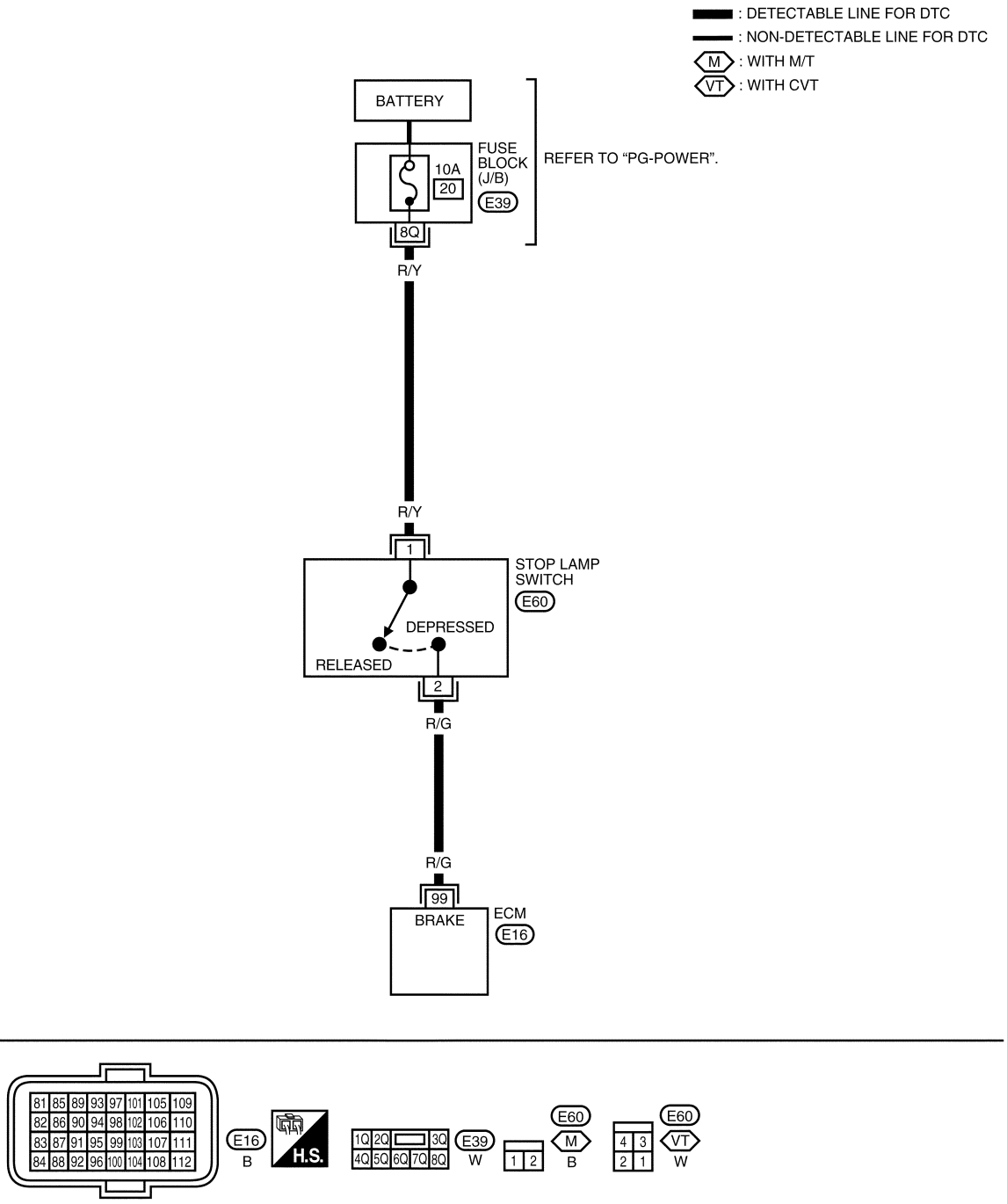

Specification data are reference values and are measured between each terminal and ground.

CAUTION:

Do not use ECM ground terminals when measuring input/output voltage. Doing so may result in damage to the ECM's transistor. Use a ground other than ECM terminals, such as the ground.

TERMINAL NO.	WIRE COLOR	ITEM	CONDITION	DATA (DC Voltage)
99	R/G	Stop lamp switch	**[Ignition switch: OFF]** • Brake pedal: Fully released	Approximately 0 V
			[Ignition switch: OFF] • Brake pedal: Slightly depressed	BATTERY VOLTAGE (11 - 14 V)

Diagnosis Procedure

INFOID:0000000005285584

1. CHECK STOP LAMP SWITCH CIRCUIT

1. Turn ignition switch OFF.
2. Check the stop lamp when depressing and releasing the brake pedal.

Brake pedal	Stop lamp
Fully released	Not illuminated
Slightly depressed	Illuminated

OK or NG

OK >> GO TO 4.
NG >> GO TO 2.

2. CHECK STOP LAMP SWITCH POWER SUPPLY CIRCUIT

1. Disconnect stop lamp switch (2) harness connector.
- ASCD brake switch (1)
- Brake pedal (3)

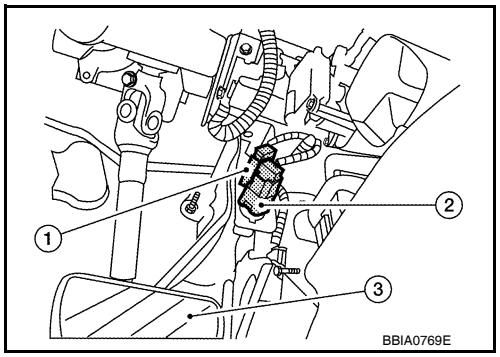

2. Check voltage between stop lamp switch terminal 1 and ground with CONSULT-III or tester.

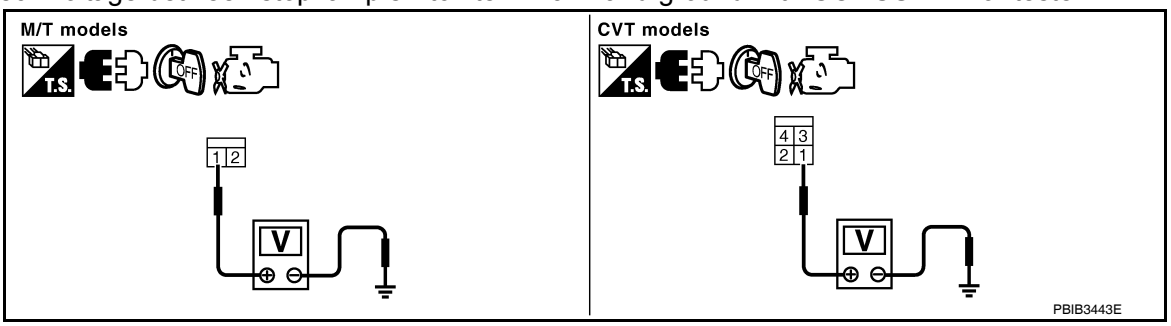

Voltage: Battery voltage

OK or NG

OK >> GO TO 4.
NG >> GO TO 3.

3. DETECT MALFUNCTIONING PART

Check the following.
- 10 A fuse
- Harness for open and short between stop lamp switch and battery

>> Repair open circuit or short to ground or short to power in harness or connectors.

4. CHECK STOP LAMP SWITCH INPUT SIGNAL CIRCUIT FOR OPEN AND SHORT

1. Disconnect stop lamp switch harness connector.
2. Disconnect ECM harness connector.
3. Check harness continuity between stop lamp switch terminal 2 and ECM terminal 99.
   Refer to Wiring Diagram.

Continuity should exist.

4. Also check harness for short to ground and short to power.

OK or NG

OK >> GO TO 5.
NG >> Repair open circuit or short to ground or short to power in harness connectors.

5. CHECK STOP LAMP SWITCH

Refer to EC-1028, "Component Inspection".

OK or NG

OK >> GO TO 6.
NG >> Replace stop lamp switch.

6. CHECK INTERMITTENT INCIDENT

Refer to EC-706.

>> **INSPECTION END**

Component Inspection

INFOID:0000000005285585

STOP LAMP SWITCH

1. Turn ignition switch OFF.
2. Disconnect stop lamp switch harness connector.
3. Check continuity between stop lamp switch terminals 1 and 2 under the following conditions.

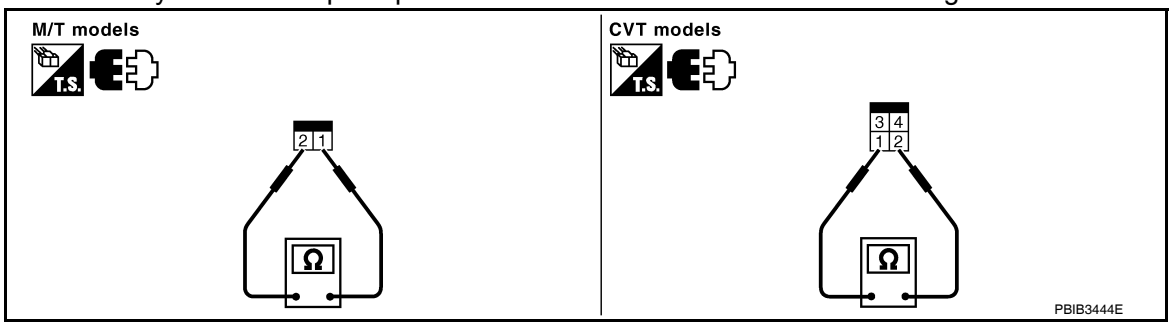

Condition	Continuity
Brake pedal: Fully released.	Should not exist.
Brake pedal: Slightly depressed.	Should exist.

If NG, adjust stop lamp switch installation, refer to BR-8, and perform step 3 again.

DTC P2100, P2103 THROTTLE CONTROL MOTOR RELAY

Component Description

INFOID:0000000005285586

Power supply for the throttle control motor is provided to the ECM via throttle control motor relay. The throttle control motor relay is ON/OFF controlled by the ECM. When the ignition switch is turned ON, the ECM sends an ON signal to throttle control motor relay and battery voltage is provided to the ECM. When the ignition switch is turned OFF, the ECM sends an OFF signal to throttle control motor relay and battery voltage is not provided to the ECM.

CONSULT-III Reference Value in Data Monitor Mode

INFOID:0000000005285587

Specification data are reference values.

Monitor item	Condition	Specification
THRTL RELAY	• Ignition switch: ON	ON

On Board Diagnosis Logic

INFOID:0000000005285588

These self-diagnoses have one trip detection logic.

DTC No.	Trouble diagnosis name	DTC detecting condition	Possible cause
P2100 2100	Throttle control motor relay circuit open	ECM detects a voltage of power source for throttle control motor is excessively low.	• Harness or connectors (Throttle control motor relay circuit is open) • Throttle control motor relay
P2103 2103	Throttle control motor relay circuit short	ECM detects the throttle control motor relay is stuck ON.	• Harness or connectors (Throttle control motor relay circuit is shorted) • Throttle control motor relay

FAIL-SAFE MODE

When the malfunction is detected, ECM enters fail-safe mode and the MIL lights up.

Engine operating condition in fail-safe mode
ECM stops the electric throttle control actuator control, throttle valve is maintained at a fixed opening (approx. 5 degrees) by the return spring.

DTC Confirmation Procedure

INFOID:0000000005285589

NOTE:
If DTC Confirmation Procedure has been previously conducted, always turn ignition switch OFF and wait at least 10 seconds before conducting the next test.

PROCEDURE FOR DTC P2100

1. Turn ignition switch ON and wait at least 2 seconds.
2. Start engine and let it idle for 5 seconds.
3. Check DTC.
4. If DTC is detected, go to EC-1031, "Diagnosis Procedure".

PROCEDURE FOR DTC P2103

TESTING CONDITION:
Before performing the following procedure, confirm that battery voltage is more than 10 V at idle.

1. Turn ignition switch ON and wait at least 1 second.
2. Check DTC.
3. If DTC is detected, go to EC-1031, "Diagnosis Procedure".

Wiring Diagram

INFOID:0000000005285590

EC-ETC2-01

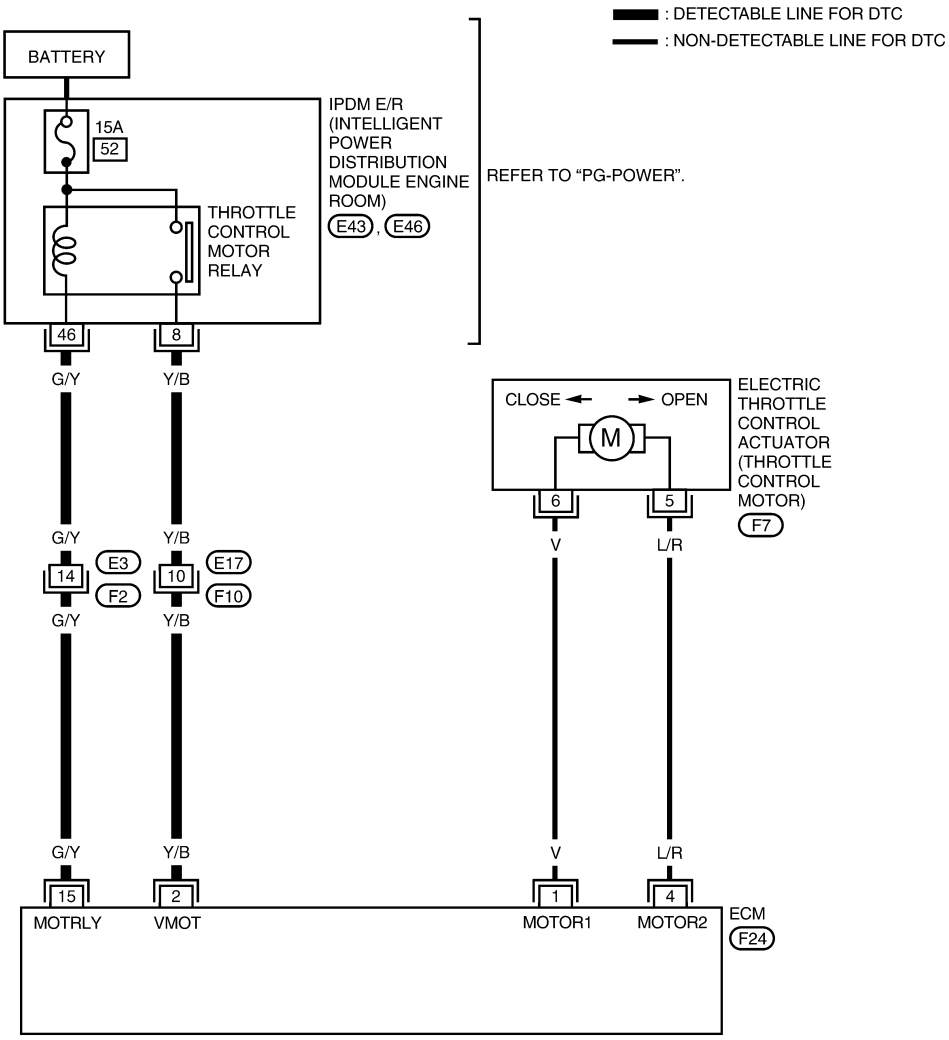

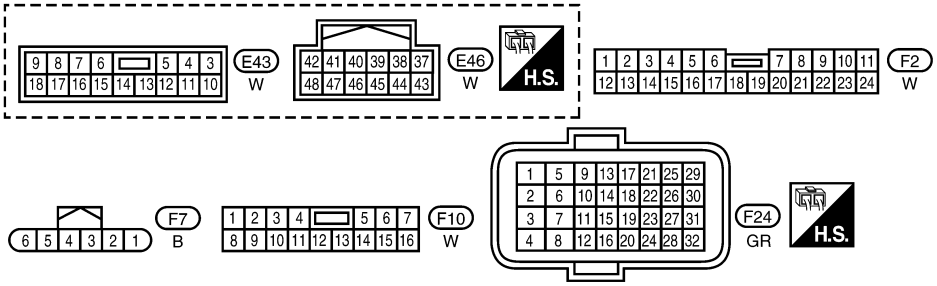

AABWA0246GB

Specification data are reference values and are measured between each terminal and ground.
Pulse signal is measured by CONSULT-III.

CAUTION:

Do not use ECM ground terminals when measuring input/output voltage. Doing so may result in damage to the ECM's transistor. Use a ground other than ECM terminals, such as the ground.

TERMINAL NO.	WIRE COLOR	ITEM	CONDITION	DATA (DC Voltage)
1	V	Throttle control motor (Open)	**[Ignition switch: ON]** • Engine stopped • Shift lever: D (CVT), 1st (M/T) • Accelerator pedal: Fully depressed	Approximately 3.2 V★ 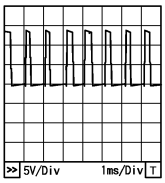 PBIA8150J
2	Y/B	Throttle control motor power supply	**[Ignition switch: ON]**	BATTERY VOLTAGE (11 - 14 V)
4	L/R	Throttle control motor (Close)	**[Ignition switch: ON]** • Engine stopped • Shift lever: D (CVT), 1st (M/T) • Accelerator pedal: Fully released	Approximately 1.8 V★ 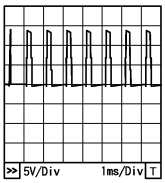 PBIA8149J
15	G/Y	Throttle control motor relay	**[Ignition switch: OFF]**	BATTERY VOLTAGE (11 - 14 V)
			[Ignition switch: ON]	0 - 1.0 V

★: Average voltage for pulse signal (Actual pulse signal can be confirmed by oscilloscope.)

Diagnosis Procedure

INFOID:0000000005285591

1. CHECK THROTTLE CONTROL MOTOR RELAY POWER SUPPLY CIRCUIT-I

1. Turn ignition switch OFF.
2. Check voltage between ECM terminal 15 and ground with CONSULT-III or tester.

Voltage: Battery voltage

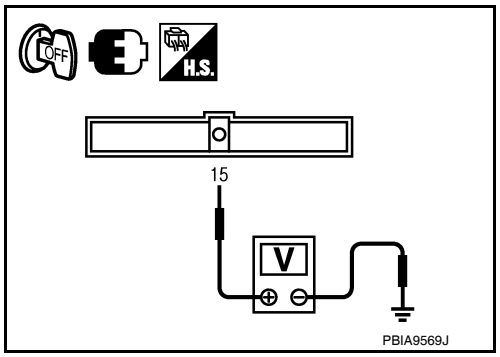

OK or NG

OK >> GO TO 5.
NG >> GO TO 2.

2. CHECK THROTTLE CONTROL MOTOR RELAY POWER SUPPLY CIRCUIT-II

1. Disconnect ECM harness connector.
2. Disconnect IPDM E/R harness connector E46.
3. Check continuity between ECM terminal 15 and IPDM E/R terminal 46. Refer to Wiring Diagram.

Continuity should exist.

4. Also check harness for short to ground and short to power.

OK or NG

OK >> GO TO 4.
NG >> GO TO 3.

3. DETECT MALFUNCTIONING PART

Check the following.
- Harness connectors E3, F2
- Harness for open or short between ECM and IPDM E/R

>> Repair open circuit or short to ground or short to power in harness or connectors.

4. CHECK FUSE

1. Disconnect 15 A fuse.
2. Check 15 A fuse for blown.

OK or NG

OK >> GO TO 8.
NG >> Replace 15 A fuse.

5. CHECK THROTTLE CONTROL MOTOR RELAY INPUT SIGNAL CIRCUIT-I

Check voltage between ECM terminal 2 and ground under the following conditions with CONSULT-III or tester.

Ignition switch	Voltage
OFF	Approximately 0 V
ON	Battery voltage (11 - 14 V)

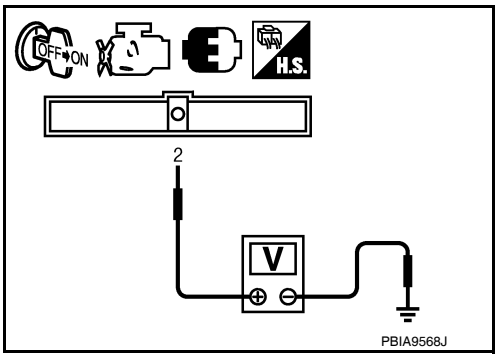

OK or NG

OK >> GO TO 8.
NG >> GO TO 6.

6. CHECK THROTTLE CONTROL MOTOR RELAY INPUT SIGNAL CIRCUIT-II

1. Turn ignition switch OFF.
2. Disconnect ECM harness connector.
3. Disconnect IPDM E/R harness connector E43.
4. Check continuity between ECM terminal 2 and IPDM E/R terminal 8.
   Refer to Wiring Diagram.

Continuity should exist.

5. Also check harness for short to ground and short to power.

OK or NG

OK >> GO TO 8.
NG >> GO TO 7.

7. DETECT MALFUNCTIONING PART

Check the following.
- Harness connectors E17, F10
- Harness for open or short between ECM and IPDM E/R

>> Repair open circuit or short to ground or short to power in harness or connectors.

8. CHECK INTERMITTENT INCIDENT

Refer to EC-706.

OK or NG

OK >> Replace IPDM E/R. Refer to PG-17.
NG >> Repair or replace harness or connectors.

DTC P2101 ELECTRIC THROTTLE CONTROL FUNCTION

Description

INFOID:0000000005285592

NOTE:
If DTC P2101 is displayed with DTC P2100 or P2119, first perform the trouble diagnosis for DTC P2100 or P2119. Refer to EC-1029or EC-1043.
Electric throttle control actuator consists of throttle control motor, throttle position sensor, etc.
The throttle control motor is operated by the ECM and it opens and closes the throttle valve.
The current opening angle of the throttle valve is detected by the throttle position sensor and it provides feedback to the ECM to control the throttle control motor to make the throttle valve opening angle properly in response to driving condition.

On Board Diagnosis Logic

INFOID:0000000005285593

This self-diagnosis has the one trip detection logic.

DTC No.	Trouble diagnosis name	DTC detecting condition	Possible cause
P2101 2101	Electric throttle control performance	Electric throttle control function does not operate properly.	• Harness or connectors (Throttle control motor circuit is open or shorted) • Electric throttle control actuator

FAIL-SAFE MODE

When the malfunction is detected, the ECM enters fail-safe mode and the MIL lights up.

Engine operating condition in fail-safe mode
ECM stops the electric throttle control actuator control, throttle valve is maintained at a fixed opening (approx. 5 degrees) by the return spring.

DTC Confirmation Procedure

INFOID:0000000005285594

NOTE:
If DTC Confirmation Procedure has been previously conducted, always turn ignition switch OFF and wait at least 10 seconds before conducting the next test.
TESTING CONDITION:
Before performing the following procedure, confirm that battery voltage is more than 11 V when engine is running.

1. Turn ignition switch ON and wait at least 2 seconds.
2. Start engine and let it idle for 5 seconds.
3. Check DTC.
4. If DTC is detected, go to EC-1035, "Diagnosis Procedure".

Wiring Diagram

INFOID:0000000005285595

EC-ETC1-01

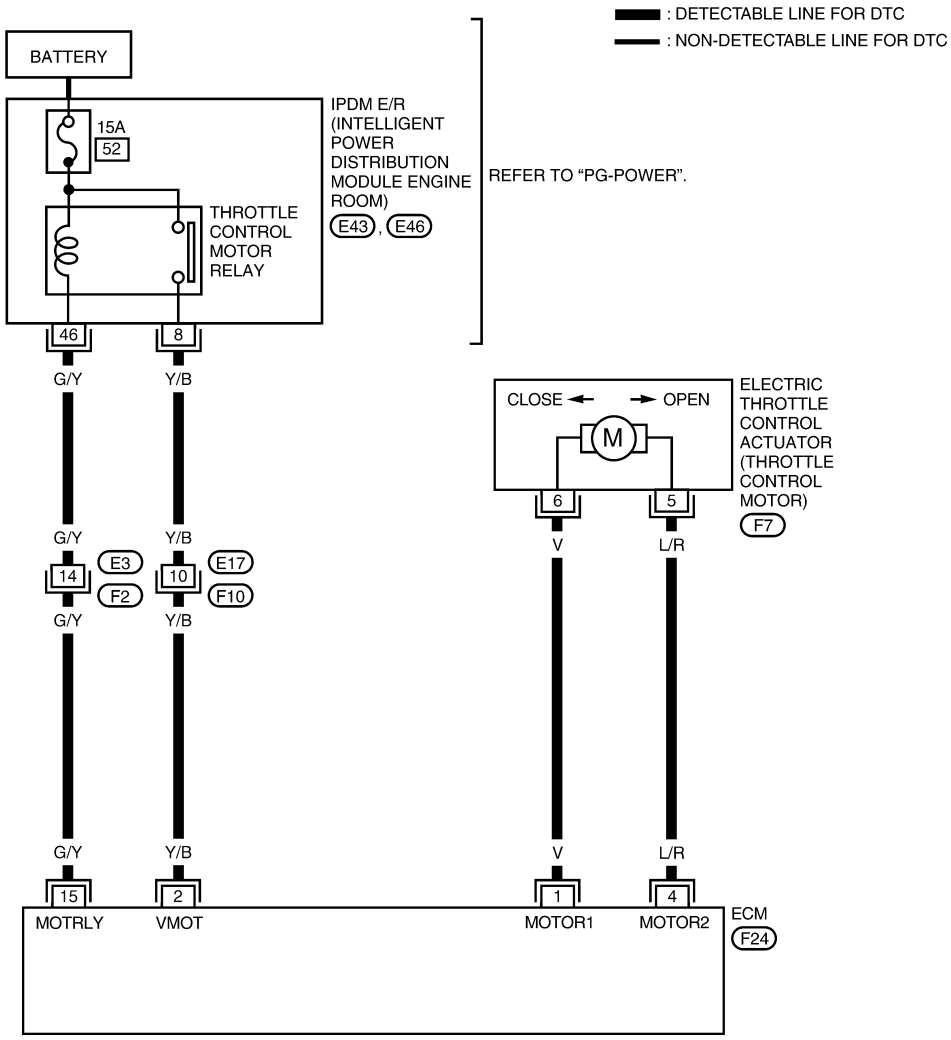

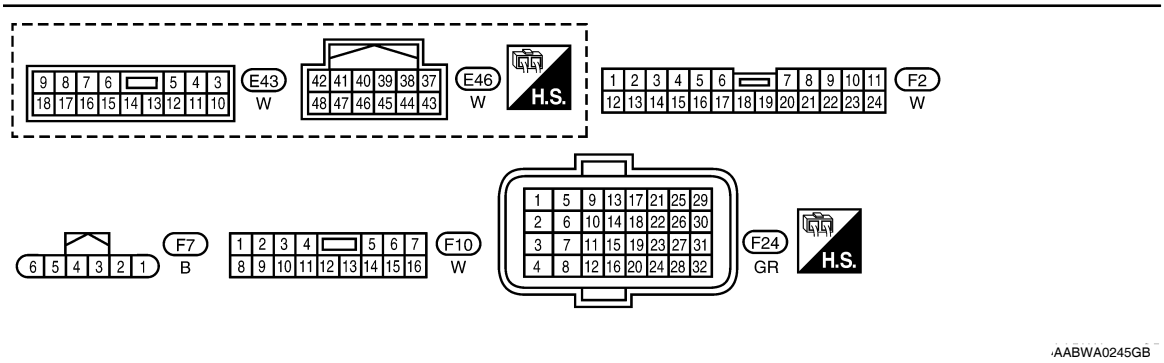

Specification data are reference values and are measured between each terminal and ground.
Pulse signal is measured by CONSULT-III.

CAUTION:

Do not use ECM ground terminals when measuring input/output voltage. Doing so may result in damage to the ECM's transistor. Use a ground other than ECM terminals, such as the ground.

TERMINAL NO.	WIRE COLOR	ITEM	CONDITION	DATA (DC Voltage)
1	V	Throttle control motor (Open)	**[Ignition switch: ON]** • Engine stopped • Shift lever: D (CVT), 1st (M/T) • Accelerator pedal: Fully depressed	Approximately 3.2 V★ 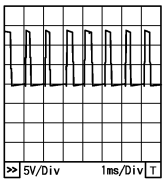 PBIA8150J
2	Y/B	Throttle control motor power supply	**[Ignition switch: ON]**	BATTERY VOLTAGE (11 - 14 V)
4	L/R	Throttle control motor (Close)	**[Ignition switch: ON]** • Engine stopped • Shift lever: D (CVT), 1st (M/T) • Accelerator pedal: Fully released	Approximately 1.8 V★ 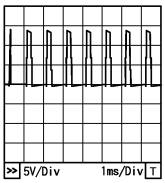 PBIA8149J
15	G/Y	Throttle control motor relay	**[Ignition switch: OFF]**	BATTERY VOLTAGE (11 - 14 V)
			[Ignition switch: ON]	0 - 1.0 V

★: Average voltage for pulse signal (Actual pulse signal can be confirmed by oscilloscope.)

Diagnosis Procedure

INFOID:0000000005285596

1. CHECK GROUND CONNECTIONS

1. Turn ignition switch OFF.
2. Loosen and retighten ground screws on the body. Refer to EC-711, "Ground Inspection".

- ⇦ : Vehicle front
- Body ground (1)

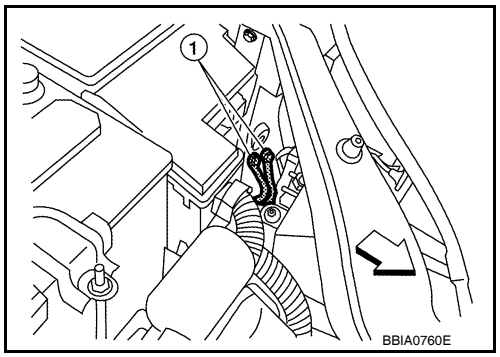

OK or NG

OK >> GO TO 2.
NG >> Repair or replace ground connections.

2. CHECK THROTTLE CONTROL MOTOR RELAY INPUT SIGNAL CIRCUIT-I

Check voltage between ECM terminal 2 and ground under the following conditions with CONSULT-III or tester.

Ignition switch	Voltage
OFF	Approximately 0 V
ON	Battery voltage (11 - 14 V)

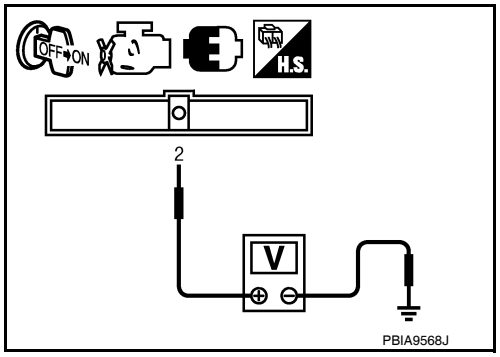

OK or NG

OK >> GO TO 10.
NG >> GO TO 3.

3. CHECK THROTTLE CONTROL MOTOR RELAY INPUT SIGNAL CIRCUIT-II

1. Turn ignition switch OFF.
2. Disconnect ECM harness connector.
3. Disconnect IPDM E/R harness connector E43.
4. Check continuity between ECM terminal 2 and IPDM E/R terminal 8.
   Refer to Wiring Diagram.

Continuity should exist.

5. Also check harness for short to ground and short to power.

OK or NG

OK >> GO TO 5.
NG >> GO TO 4.

4. DETECT MALFUNCTIONING PART

Check the following.
- Harness connectors E17, F10
- Harness for open or short between ECM and IPDM E/R

>> Repair open circuit or short to ground or short to power in harness or connectors.

5. CHECK THROTTLE CONTROL MOTOR RELAY POWER SUPPLY CIRCUIT-I

1. Reconnect all harness connectors disconnected.
2. Check voltage between ECM terminal 15 and ground with CONSULT-III or tester.

Voltage: Battery voltage

OK or NG

OK >> GO TO 9.
NG >> GO TO 6.

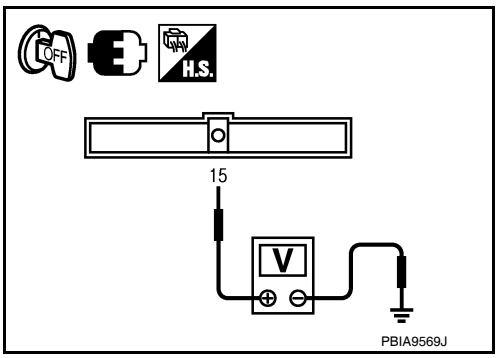

6. CHECK THROTTLE CONTROL MOTOR RELAY POWER SUPPLY CIRCUIT-II

1. Disconnect ECM harness connector.
2. Disconnect IPDM E/R harness connector E46.
3. Check harness continuity between ECM terminal 15 and IPDM E/R terminal 46.
   Refer to Wiring Diagram.

Continuity should exist.

4. Also check harness for short to ground and short to power.

OK or NG

OK >> GO TO 8.
NG >> GO TO 7.

7. DETECT MALFUNCTIONING PART

Check the following.
- Harness connectors E3, F2
- Harness for open or short between ECM and IPDM E/R

>> Repair open circuit or short to ground or short to power in harness or connectors.

8. CHECK FUSE

1. Disconnect 15 A fuse.
2. Check 15 A fuse for blown.

OK or NG

OK >> GO TO 9.
NG >> Replace 15 A fuse.

9. CHECK INTERMITTENT INCIDENT

Refer to EC-706.

OK or NG

OK >> Replace IPDM E/R. Refer to PG-17.
NG >> Repair or replace harness or connectors.

10. CHECK THROTTLE CONTROL MOTOR OUTPUT SIGNAL CIRCUIT FOR OPEN OR SHORT

1. Turn ignition switch OFF.
2. Disconnect electric throttle control actuator (1) harness connector.
3. Disconnect ECM harness connector.
4. Check harness continuity between the following terminals. Refer to Wiring Diagram.

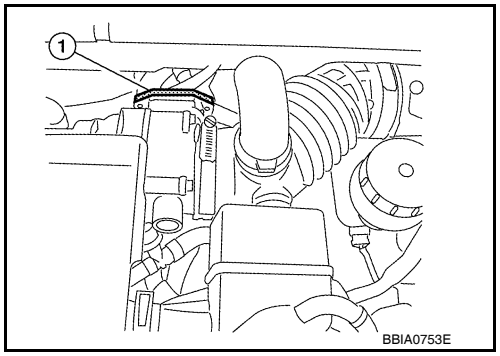

Electric throttle control actuator terminal	ECM terminal	Continuity
5	1	Should not exist.
	4	Should exist.
6	1	Should exist.
	4	Should not exist.

5. Also check harness for short to ground and short to power.

OK or NG

OK >> GO TO 11.
NG >> Repair or replace.

11. CHECK ELECTRIC THROTTLE CONTROL ACTUATOR VISUALLY

1. Remove the intake air duct.
2. Check if foreign matter is caught between the throttle valve (1) and the housing.

- ⇦ : Vehicle front
- Illustration shows the view with intake air duct removed.

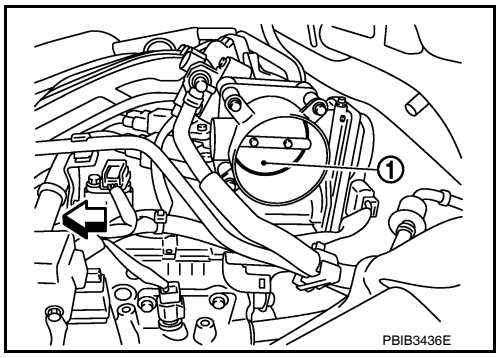

OK or NG

OK >> GO TO 12.
NG >> Remove the foreign matter and clean the electric throttle control actuator inside.

12. CHECK THROTTLE CONTROL MOTOR

Refer to EC-1038, "Component Inspection".

OK or NG

OK >> GO TO 13.
NG >> GO TO 14.

13. CHECK INTERMITTENT INCIDENT

Refer to EC-706.

OK or NG

OK >> GO TO 14.
NG >> Repair or replace harness or connectors.

14. REPLACE ELECTRIC THROTTLE CONTROL ACTUATOR

1. Replace the electric throttle control actuator.
2. Perform EC-654, "Throttle Valve Closed Position Learning".
3. Perform EC-654, "Idle Air Volume Learning".

>> **INSPECTION END**

Component Inspection

INFOID:0000000005285597

THROTTLE CONTROL MOTOR

1. Disconnect electric throttle control actuator harness connector.
2. Check resistance between terminals 5 and 6.

Resistance: Approximately 1 - 15 Ω [at 25 °C (77°F)]

3. If NG, replace electric throttle control actuator and go to next step.
4. Perform EC-654, "Throttle Valve Closed Position Learning".
5. Perform EC-654, "Idle Air Volume Learning".

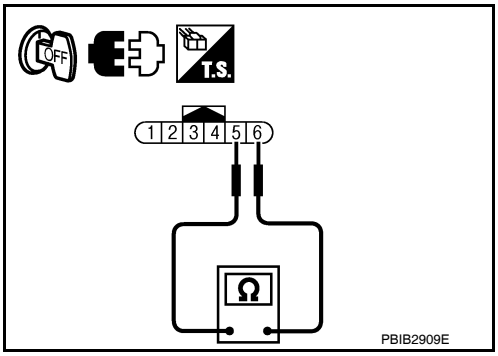

Removal and Installation

INFOID:0000000005285598

ELECTRIC THROTTLE CONTROL ACTUATOR

Refer to EM-18.

DTC P2118 THROTTLE CONTROL MOTOR

Component Description

INFOID:0000000005285599

The throttle control motor is operated by the ECM and it opens and closes the throttle valve.
The current opening angle of the throttle valve is detected by the throttle position sensor and it provides feedback to the ECM to control the throttle control motor to make the throttle valve opening angle properly in response to driving condition.

On Board Diagnosis Logic

INFOID:0000000005285600

This self-diagnosis has the one trip detection logic.

DTC No.	Trouble diagnosis name	DTC detecting condition	Possible cause
P2118 2118	Throttle control motor circuit short	ECM detects short in both circuits between ECM and throttle control motor.	• Harness or connectors (Throttle control motor circuit is shorted.) • Electric throttle control actuator (Throttle control motor)

FAIL-SAFE MODE
When the malfunction is detected, ECM enters fail-safe mode and the MIL lights up.

Engine operating condition in fail-safe mode
ECM stops the electric throttle control actuator control, throttle valve is maintained at a fixed opening (approx. 5 degrees) by the return spring.

DTC Confirmation Procedure

INFOID:0000000005285601

NOTE:
If DTC Confirmation Procedure has been previously conducted, always turn ignition switch OFF and wait at least 10 seconds before conducting the next test.

1. Turn ignition switch ON and wait at least 2 seconds.
2. Start engine and let it idle for 5 seconds.
3. Check DTC.
4. If DTC is detected, go to EC-1041, "Diagnosis Procedure".

Wiring Diagram

INFOID:0000000005285602

EC-ETC3-01

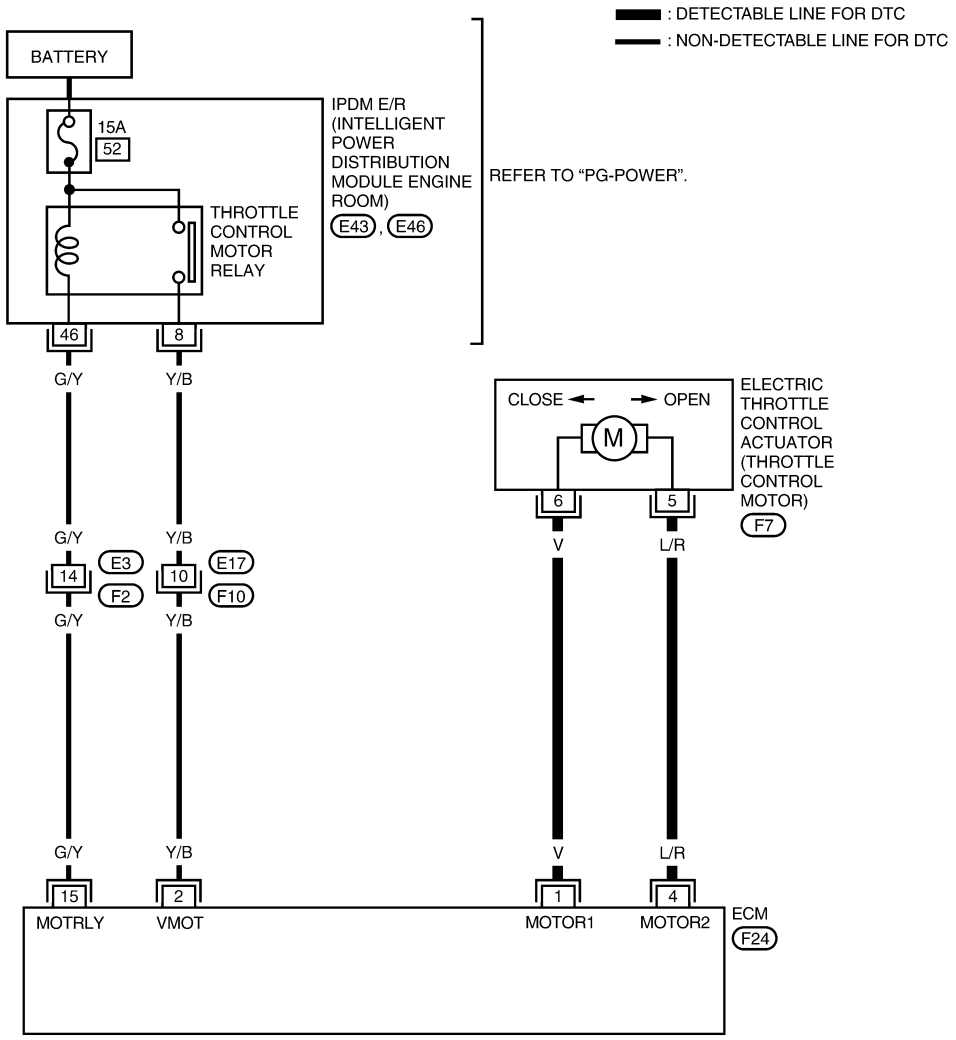

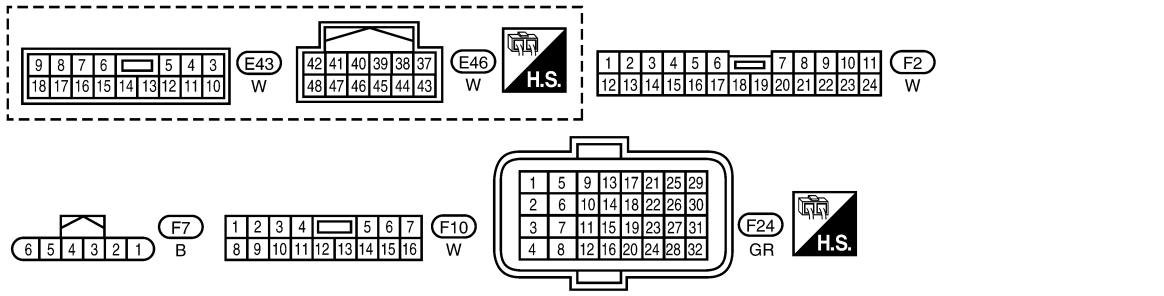

AABWA0247GB

Specification data are reference values and are measured between each terminal and ground.
Pulse signal is measured by CONSULT-III.

CAUTION:

Do not use ECM ground terminals when measuring input/output voltage. Doing so may result in damage to the ECM's transistor. Use a ground other than ECM terminals, such as the ground.

TERMINAL NO.	WIRE COLOR	ITEM	CONDITION	DATA (DC Voltage)
1	V	Throttle control motor (Open)	**[Ignition switch: ON]** • Engine stopped • Shift lever: D (CVT), 1st (M/T) • Accelerator pedal: Fully depressed	Approximately 3.2 V★ 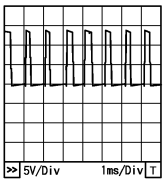 PBIA8150J
2	Y/B	Throttle control motor power supply	**[Ignition switch: ON]**	BATTERY VOLTAGE (11 - 14 V)
4	L/R	Throttle control motor (Close)	**[Ignition switch: ON]** • Engine stopped • Shift lever: D (CVT), 1st (M/T) • Accelerator pedal: Fully released	Approximately 1.8 V★ 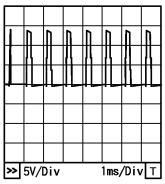 PBIA8149J
15	G/Y	Throttle control motor relay	**[Ignition switch: OFF]**	BATTERY VOLTAGE (11 - 14 V)
			[Ignition switch: ON]	0 - 1.0 V

★: Average voltage for pulse signal (Actual pulse signal can be confirmed by oscilloscope.)

Diagnosis Procedure

INFOID:0000000005285603

1. CHECK GROUND CONNECTIONS

1. Turn ignition switch OFF.
2. Loosen and retighten engine screws on the body. Refer to EC-711, "Ground Inspection".

- ⇦ : Vehicle front
- Body ground (1)

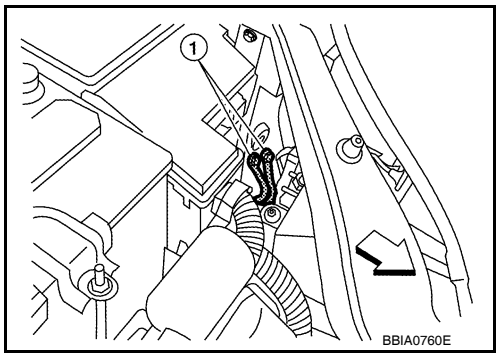

OK or NG

OK >> GO TO 2.
NG >> Repair or replace ground connections.

2. CHECK THROTTLE CONTROL MOTOR OUTPUT SIGNAL CIRCUIT FOR OPEN OR SHORT

1. Disconnect electric throttle control actuator (1) harness connector.
2. Disconnect ECM harness connector.
3. Check harness continuity between the following terminals. Refer to Wiring Diagram.

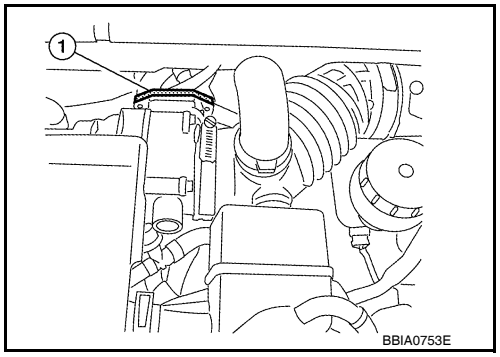

Electric throttle control actuator terminal	ECM terminal	Continuity
5	1	Should not exist.
	4	Should exist.

Electric throttle control actuator terminal	ECM terminal	Continuity
6	1	Should exist.
	4	Should not exist.

4. Also check harness for short to ground and short to power.

OK or NG

OK >> GO TO 3.
NG >> Repair open circuit or short to ground or short to power in harness or connectors.

3. CHECK THROTTLE CONTROL MOTOR

Refer to EC-1042, "Component Inspection".

OK or NG

OK >> GO TO 4.
NG >> GO TO 5.

4. CHECK INTERMITTENT INCIDENT

Refer to EC-706.

OK or NG

OK >> GO TO 5.
NG >> Repair or replace harness or connectors.

5. REPLACE ELECTRIC THROTTLE CONTROL ACTUATOR

1. Replace the electric throttle control actuator.
2. Perform EC-654, "Throttle Valve Closed Position Learning".
3. Perform EC-654, "Idle Air Volume Learning".

>> **INSPECTION END**

Component Inspection

INFOID:0000000005285604

THROTTLE CONTROL MOTOR

1. Disconnect electric throttle control actuator harness connector.
2. Check resistance between terminals 5 and 6.

Resistance: Approximately 1 - 15 Ω [at 25 °C (77°F)]

3. If NG, replace electric throttle control actuator and go to next step.
4. Perform EC-654, "Throttle Valve Closed Position Learning".
5. Perform EC-654, "Idle Air Volume Learning".

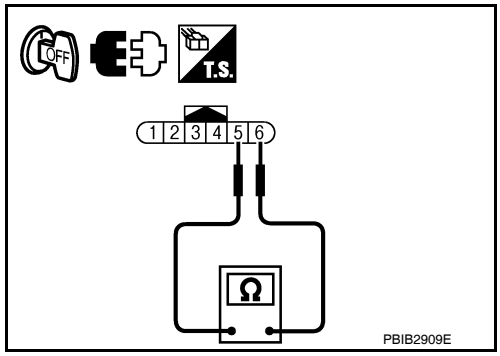

Removal and Installation

INFOID:0000000005285605

ELECTRIC THROTTLE CONTROL ACTUATOR

Refer to EM-18.

DTC P2119 ELECTRIC THROTTLE CONTROL ACTUATOR

Component Description

INFOID:0000000005285606

Electric throttle control actuator consists of throttle control motor, throttle position sensor, etc.
The throttle control motor is operated by the ECM and it opens and closes the throttle valve.
The throttle position sensor detects the throttle valve position, and the opening and closing speed of the throttle valve and feeds the voltage signals to the ECM. The ECM judges the current opening angle of the throttle valve from these signals and the ECM controls the throttle control motor to make the throttle valve opening angle properly in response to driving condition.

On Board Diagnosis Logic

INFOID:0000000005285607

This self-diagnosis has the one trip detection logic.

DTC No.	Trouble diagnosis name	DTC detecting condition		Possible cause
P2119 2119	Electric throttle control actuator	A)	Electric throttle control actuator does not function properly due to the return spring malfunction.	• Electric throttle control actuator
		B)	Throttle valve opening angle in fail-safe mode is not in specified range.	
		C)	ECM detects the throttle valve is stuck open.	

FAIL-SAFE MODE

When the malfunction is detected, ECM enters fail-safe mode and the MIL lights up.

Detected items	Engine operating condition in fail-safe mode
Malfunction A	ECM controls the electric throttle actuator by regulating the throttle opening around the idle position. The engine speed will not rise more than 2,000 rpm.
Malfunction B	ECM controls the electric throttle control actuator by regulating the throttle opening to 20 degrees or less.
Malfunction C	While the vehicle is driving, it slows down gradually by fuel cut. After the vehicle stops, the engine stalls. The engine can restart in N or P position (CVT), neutral (M/T), and engine speed will not exceed 1,000 rpm or more.

DTC Confirmation Procedure

INFOID:0000000005285608

NOTE:
- **Perform PROCEDURE FOR MALFUNCTION A AND B first. If the DTC cannot be confirmed, perform PROCEDURE FOR MALFUNCTION C.**
- If DTC Confirmation Procedure has been previously conducted, always turn ignition switch OFF and wait at least 10 seconds before conducting the next test.

PROCEDURE FOR MALFUNCTION A AND B

1. Turn ignition switch ON and wait at least 1 second.
2. Set shift lever to D position (CVT) or 1st position (M/T), and wait at least 3 seconds.
3. Set shift lever to P position (CVT) or Neutral position (M/T).
4. Turn ignition switch OFF and wait at least 10 seconds.
5. Turn ignition switch ON and wait at least 1 second.
6. Set shift lever to D position (CVT) or 1st position (M/T), and wait at least 3 seconds.
7. Set shift lever to P position (CVT) or Neutral position (M/T).
8. Turn ignition switch OFF, wait at least 10 seconds, and then turn ON.
9. Check DTC.
10. If DTC is detected, go to EC-1044, "Diagnosis Procedure".

PROCEDURE FOR MALFUNCTION C

1. Turn ignition switch ON and wait at least 1 second.
2. Set shift lever to D position (CVT) or 1st position (M/T) and wait at least 3 seconds.

3. Set shift lever to N, P position (CVT) or Neutral (M/T) position.
4. Start engine and let it idle for 3 seconds.
5. Check DTC.
6. If DTC is detected, go to EC-1044, "Diagnosis Procedure".

Diagnosis Procedure

INFOID:0000000005285609

1. CHECK ELECTRIC THROTTLE CONTROL ACTUATOR VISUALLY

1. Remove the intake air duct.
2. Check if a foreign matter is caught between the throttle valve (1) and the housing.

- ⇦ : Vehicle front
- This illumination is shows the view with intake air duct removed.

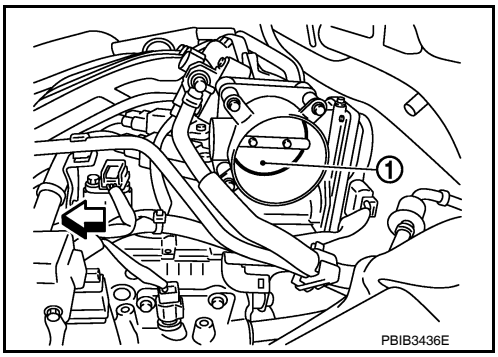

OK or NG

OK >> GO TO 2.
NG >> Remove the foreign matter and clean the electric throttle control actuator inside.

2. REPLACE ELECTRIC THROTTLE CONTROL ACTUATOR

1. Replace the electric throttle control actuator.
2. Perform EC-654, "Throttle Valve Closed Position Learning".
3. Perform EC-654, "Idle Air Volume Learning".

>> **INSPECTION END**

DTC P2122, P2123 APP SENSOR

Component Description

INFOID:0000000005285610

The accelerator pedal position sensor is installed on the upper end of the accelerator pedal assembly. The sensor detects the accelerator position and sends a signal to the ECM.
Accelerator pedal position sensor has two sensors. These sensors are a kind of potentiometers which transform the accelerator pedal position into output voltage, and emit the voltage signal to the ECM. In addition, these sensors detect the opening and closing speed of the accelerator pedal and feed the voltage signals to the ECM. The ECM judges the current opening angle of the accelerator pedal from these signals and controls the throttle control motor based on these signals.

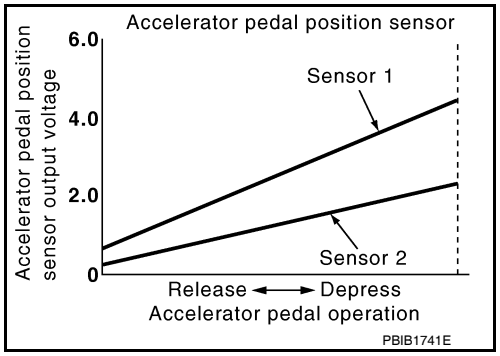

Idle position of the accelerator pedal is determined by the ECM receiving the signal from the accelerator pedal position sensor. The ECM uses this signal for the engine operation such as fuel cut.

CONSULT-III Reference Value in Data Monitor Mode

INFOID:0000000005285611

Specification data are reference values.

Monitor item	Condition		Specification
ACCEL SEN 1	• Ignition switch: ON (Engine stopped)	Accelerator pedal: Fully released	0.6 - 0.9 V
		Accelerator pedal: Fully depressed	4.0 - 4.8 V
ACCEL SEN 2*	• Ignition switch: ON (Engine stopped)	Accelerator pedal: Fully released	0.6 - 0.9 V
		Accelerator pedal: Fully depressed	3.9 - 4.8 V
CLSD THL POS	• Ignition switch: ON (Engine stopped)	Accelerator pedal: Fully released	ON
		Accelerator pedal: Slightly depressed	OFF

*: Accelerator pedal position sensor 2 signal is converted by ECM internally. Thus, it differs from ECM terminal voltage.

On Board Diagnosis Logic

INFOID:0000000005285612

These self-diagnoses have the one trip detection logic.
NOTE:
If DTC P2122 or P2123 is displayed with DTC P0643, first perform the trouble diagnosis for DTC P0643. Refer to EC-976.

DTC No.	Trouble diagnosis name	DTC detecting condition	Possible cause
P2122 2122	Accelerator pedal position sensor 1 circuit low input	An excessively low voltage from the APP sensor 1 is sent to ECM.	• Harness or connectors (APP sensor 1 circuit is open or shorted.) • Accelerator pedal position sensor (APP sensor 1)
P2123 2123	Accelerator pedal position sensor 1 circuit high input	An excessively high voltage from the APP sensor 1 is sent to ECM.	

FAIL-SAFE MODE

When the malfunction is detected, ECM enters fail-safe mode and the MIL lights up.

Engine operating condition in fail-safe mode
The ECM controls the electric throttle control actuator in regulating the throttle opening in order for the idle position to be within +10 degrees. The ECM regulates the opening speed of the throttle valve to be slower than the normal condition. So, the acceleration will be poor.

DTC Confirmation Procedure

INFOID:0000000005285613

NOTE:

If DTC Confirmation Procedure has been previously conducted, always turn ignition switch OFF and wait at least 10 seconds before conducting the next test.

TESTING CONDITION:

Before performing the following procedure, confirm that battery voltage is more than 8 V at idle.

1. Start engine and let it idle for 1 second.
2. Check DTC.
3. If DTC is detected, go to EC-1047, "Diagnosis Procedure".

Wiring Diagram

INFOID:0000000005285614

EC-APPS1-01

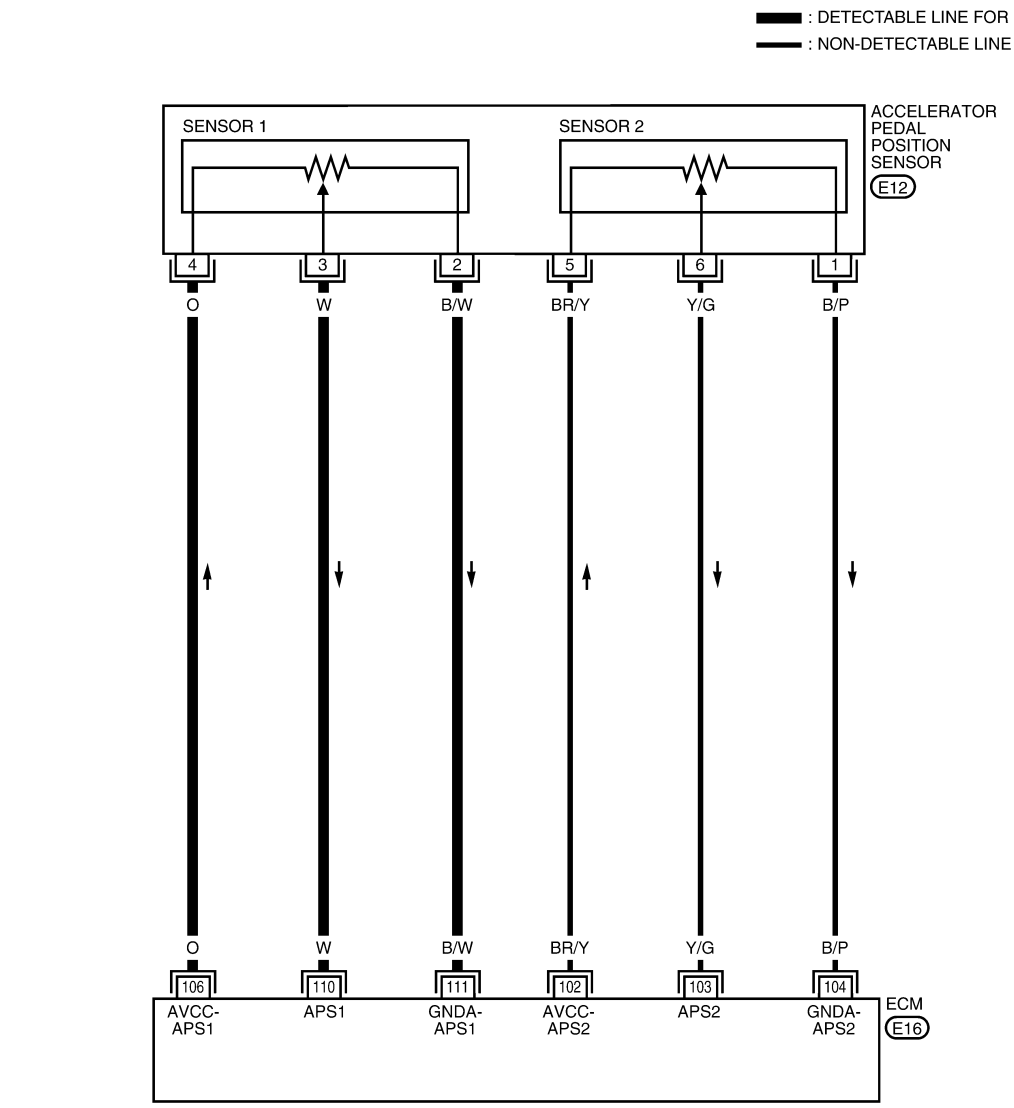

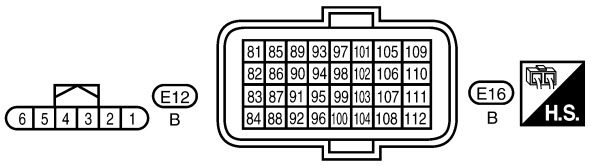

BBWA2900E

Specification data are reference values and are measured between each terminal and ground.

CAUTION:

Do not use ECM ground terminals when measuring input/output voltage. Doing so may result in damage to the ECM's transistor. Use a ground other than ECM terminals, such as the ground.

TERMINAL NO.	WIRE COLOR	ITEM	CONDITION	DATA (DC Voltage)
102	BR/Y	Sensor power supply (APP sensor 2)	**[Ignition switch: ON]**	Approximately 5 V
103	Y/G	Accelerator pedal position sensor 2	**[Ignition switch: ON]** • Engine stopped • Accelerator pedal: Fully released	0.3 - 0.6 V
			[Ignition switch: ON] • Engine stopped • Accelerator pedal: Fully depressed	1.95 - 2.4 V
104	B/P	Sensor ground (APP sensor 2)	**[Engine is running]** • **Warm-up condition** • Idle speed	Approximately 0 V
106	O	Sensor power supply (APP sensor 1)	**[Ignition switch: ON]**	Approximately 5 V
110	W	Accelerator pedal position sensor 1	**[Ignition switch: ON]** • Engine stopped • Accelerator pedal: Fully released	0.6 - 0.9 V
			[Ignition switch: ON] • Engine stopped • Accelerator pedal: Fully depressed	3.9 - 4.7 V
111	B/W	Sensor ground (APP sensor 1)	**[Engine is running]** • **Warm-up condition** • Idle speed	Approximately 0 V

Diagnosis Procedure

INFOID:0000000005285615

1. CHECK GROUND CONNECTIONS

1. Turn ignition switch OFF.
2. Loosen and retighten ground screws on the body.
   Refer to EC-711, "Ground Inspection".

- ⇦ : Vehicle front
- Body ground (1)

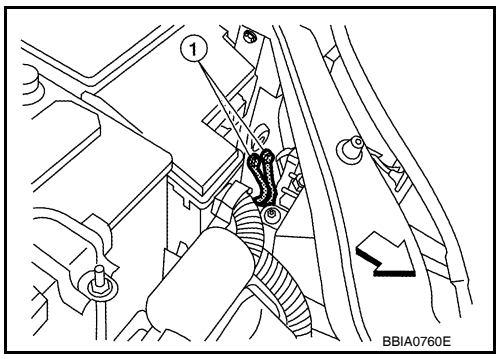

OK or NG

OK >> GO TO 2.
NG >> Repair or replace ground connections.

2. CHECK APP SENSOR 1 POWER SUPPLY CIRCUIT

1. Disconnect accelerator pedal position (APP) sensor (1) harness connector.
2. Turn ignition switch ON.

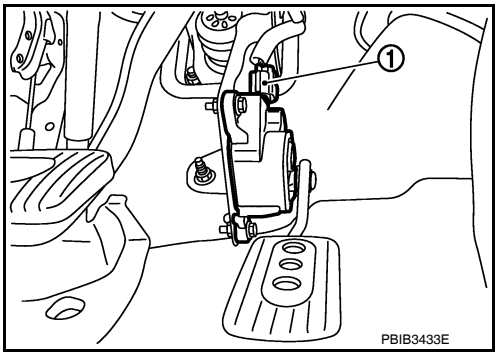

3. Check voltage between APP sensor terminal 4 and ground with CONSULT-III or tester.

Voltage: Approximately 5 V

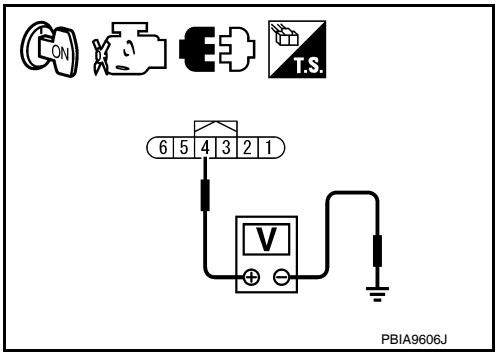

OK or NG

OK >> GO TO 3.
NG >> Repair open circuit or short to ground or short to power in harness or connectors.

3. CHECK APP SENSOR 1 GROUND CIRCUIT FOR OPEN AND SHORT

1. Turn ignition switch OFF.
2. Disconnect ECM harness connector.
3. Check harness continuity between ECM terminal 111 and APP sensor terminal 2. Refer to Wiring Diagram.

Continuity should exist.

4. Also check harness for short to ground and short to power.

OK or NG

OK >> GO TO 4.
NG >> Repair open circuit or short to ground or short to power in harness or connectors.

4. CHECK APP SENSOR 1 INPUT SIGNAL CIRCUIT FOR OPEN AND SHORT

1. Check harness continuity between ECM terminal 110 and APP sensor terminal 3. Refer to Wiring Diagram.

Continuity should exist.

2. Also check harness for short to ground and short to power.

OK or NG

OK >> GO TO 5.
NG >> Repair open circuit or short to ground or short to power in harness or connectors.

5. CHECK APP SENSOR

Refer to EC-1049, "Component Inspection".

OK or NG

OK >> GO TO 7.
NG >> GO TO 6.

6. REPLACE ACCELERATOR PEDAL ASSEMBLY

1. Replace accelerator pedal assembly.
2. Perform EC-654, "Accelerator Pedal Released Position Learning".
3. Perform EC-654, "Throttle Valve Closed Position Learning".
4. Perform EC-654, "Idle Air Volume Learning".

>> **INSPECTION END**

7. CHECK INTERMITTENT INCIDENT

Refer to EC-706.

>> **INSPECTION END**

Component Inspection

INFOID:0000000005285616

ACCELERATOR PEDAL POSITION SENSOR

1. Reconnect all harness connectors disconnected.
2. Turn ignition switch ON.
3. Check voltage between ECM terminals 110 (APP sensor 1 signal), 103 (APP sensor 2 signal) and ground under the following conditions.

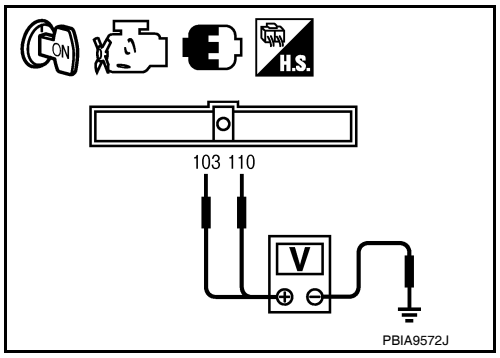

Terminal	Accelerator pedal	Voltage
110 (Accelerator pedal position sensor 1)	Fully released	0.6 - 0.9 V
	Fully depressed	3.9 - 4.7 V
103 (Accelerator pedal position sensor 2)	Fully released	0.3 - 0.6 V
	Fully depressed	1.95 - 2.4 V

4. If NG, replace accelerator pedal assembly and go to next step.
5. Perform EC-654, "Accelerator Pedal Released Position Learning".
6. Perform EC-654, "Throttle Valve Closed Position Learning".
7. Perform EC-654, "Idle Air Volume Learning".

Removal and Installation

INFOID:0000000005285617

ACCELERATOR PEDAL

Refer to ACC-4.

DTC P2127, P2128 APP SENSOR

Component Description

INFOID:0000000005285618

The accelerator pedal position sensor is installed on the upper end of the accelerator pedal assembly. The sensor detects the accelerator position and sends a signal to the ECM.
Accelerator pedal position sensor has two sensors. These sensors are a kind of potentiometers which transform the accelerator pedal position into output voltage, and emit the voltage signal to the ECM. In addition, these sensors detect the opening and closing speed of the accelerator pedal and feed the voltage signals to the ECM. The ECM judges the current opening angle of the accelerator pedal from these signals and controls the throttle control motor based on these signals.

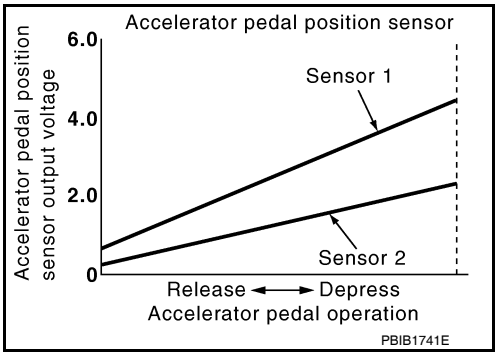

Idle position of the accelerator pedal is determined by the ECM receiving the signal from the accelerator pedal position sensor. The ECM uses this signal for the engine operation such as fuel cut.

CONSULT-III Reference Value in Data Monitor Mode

INFOID:0000000005285619

Specification data are reference values.

Monitor item	Condition		Specification
ACCEL SEN 1	• Ignition switch: ON (Engine stopped)	Accelerator pedal: Fully released	0.6 - 0.9 V
		Accelerator pedal: Fully depressed	4.0 - 4.8 V
ACCEL SEN 2*	• Ignition switch: ON (Engine stopped)	Accelerator pedal: Fully released	0.6 - 0.9 V
		Accelerator pedal: Fully depressed	3.9 - 4.8 V
CLSD THL POS	• Ignition switch: ON (Engine stopped)	Accelerator pedal: Fully released	ON
		Accelerator pedal: Slightly depressed	OFF

*: Accelerator pedal position sensor 2 signal is converted by ECM internally. Thus, it differs from ECM terminal voltage.

On Board Diagnosis Logic

INFOID:0000000005285620

These self-diagnoses have the one trip detection logic.

DTC No.	Trouble diagnosis name	DTC detecting condition	Possible cause
P2127 2127	Accelerator pedal position sensor 2 circuit low input	An excessively low voltage from the APP sensor 2 is sent to ECM.	• Harness or connectors (APP sensor 2 circuit is open or shorted.) [Crankshaft position sensor (POS) circuit is shorted.] (Refrigerant pressure sensor circuit is shorted.) (EVAP control system pressure sensor circuit is shorted.) • Accelerator pedal position sensor (APP sensor 2) • Crankshaft position sensor (POS) • Refrigerant pressure sensor • EVAP control system pressure sensor
P2128 2128	Accelerator pedal position sensor 2 circuit high input	An excessively high voltage from the APP sensor 2 is sent to ECM.	

FAIL-SAFE MODE

When the malfunction is detected, ECM enters fail-safe mode and the MIL lights up.

Engine operating condition in fail-safe mode
The ECM controls the electric throttle control actuator in regulating the throttle opening in order for the idle position to be within +10 degrees. The ECM regulates the opening speed of the throttle valve to be slower than the normal condition. So, the acceleration will be poor.

DTC Confirmation Procedure

INFOID:0000000005285621

NOTE:
If DTC Confirmation Procedure has been previously conducted, always turn ignition switch OFF and wait at least 10 seconds before conducting the next test.

TESTING CONDITION:
Before performing the following procedure, confirm that battery voltage is more than 8 V at idle.

1. Start engine and let it idle for 1 second.
2. Check DTC.
3. If DTC is detected, go to EC-1053, "Diagnosis Procedure".

Wiring Diagram

INFOID:0000000005285622

EC-APPS2-01

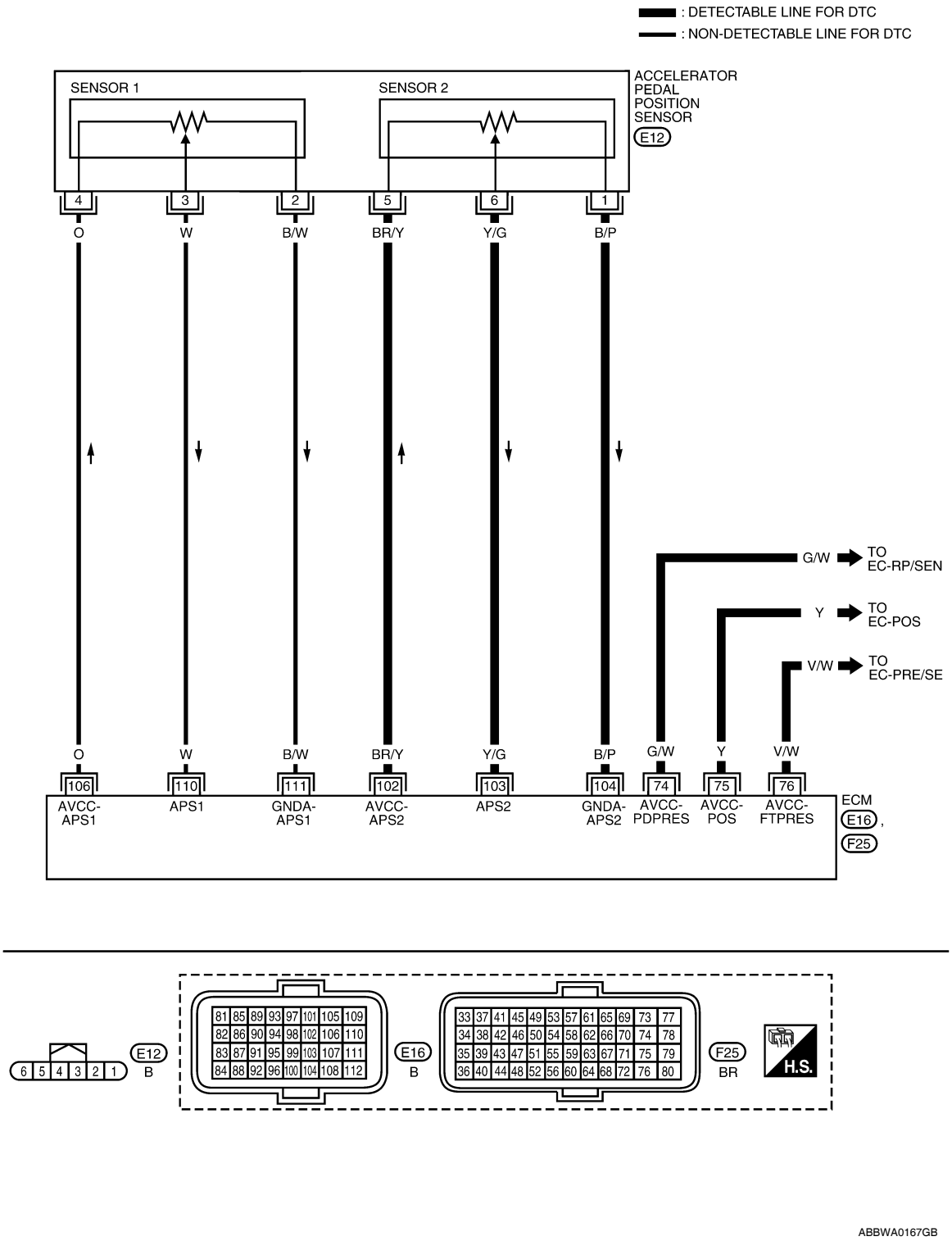

Specification data are reference values and are measured between each terminal and ground.

CAUTION:

Do not use ECM ground terminals when measuring input/output voltage. Doing so may result in damage to the ECM's transistor. Use a ground other than ECM terminals, such as the ground.

TERMINAL NO.	WIRE COLOR	ITEM	CONDITION	DATA (DC Voltage)
74	G/W	Sensor power supply (Refrigerant pressure sensor)	**[Ignition switch: ON]**	Approximately 5 V
75	Y	Sensor power supply [Crankshaft position sensor (POS)]	**[Ignition switch: ON]**	Approximately 5 V
76	V/W	EVAP control system pressure sensor power supply	**[Ignition switch: ON]**	Approximately 5 V
102	BR/Y	Sensor power supply (APP sensor 2)	**[Ignition switch: ON]**	Approximately 5 V
103	Y/G	Accelerator pedal position sensor 2	**[Ignition switch: ON]** • Engine stopped • Accelerator pedal: Fully released	0.3 - 0.6 V
			[Ignition switch: ON] • Engine stopped • Accelerator pedal: Fully depressed	1.95 - 2.4 V
104	B/P	Sensor ground (APP sensor 2)	**[Engine is running]** • **Warm-up condition** • Idle speed	Approximately 0 V
106	O	Sensor power supply (APP sensor 1)	**[Ignition switch: ON]**	Approximately 5 V
110	W	Accelerator pedal position sensor 1	**[Ignition switch: ON]** • Engine stopped • Accelerator pedal: Fully released	0.6 - 0.9 V
			[Ignition switch: ON] • Engine stopped • Accelerator pedal: Fully depressed	3.9 - 4.7 V
111	B/W	Sensor ground (APP sensor 1)	**[Engine is running]** • **Warm-up condition** • Idle speed	Approximately 0 V

Diagnosis Procedure

INFOID:0000000005285623

1. CHECK GROUND CONNECTIONS

1. Turn ignition switch OFF.
2. Loosen and retighten ground screws on the body. Refer to EC-711, "Ground Inspection".

- ⇦ : Vehicle front
- Body ground (1)

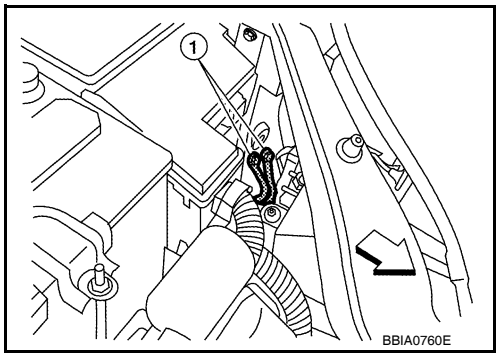

OK or NG

OK >> GO TO 2.
NG >> Repair or replace ground connections.

2. CHECK APP SENSOR 2 POWER SUPPLY CIRCUIT-I

1. Disconnect accelerator pedal position (APP) sensor (1) harness connector.
2. Turn ignition switch ON.

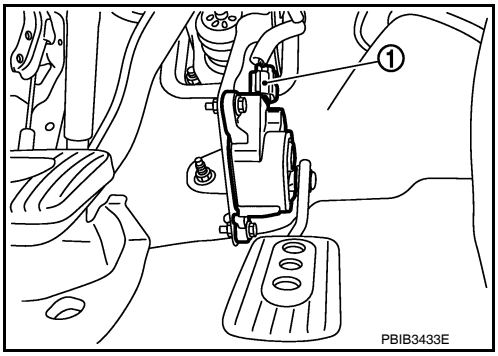

3. Check voltage between APP sensor terminal 5 and ground with CONSULT-III or tester.

Voltage: Approximately 5 V

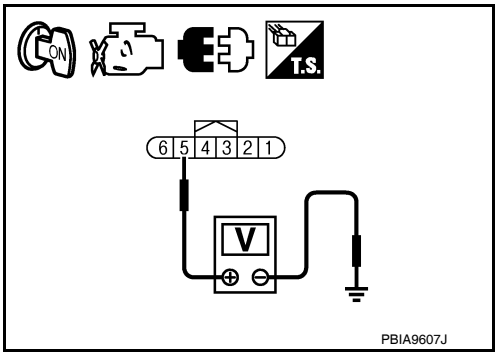

OK or NG

OK >> GO TO 6.
NG >> GO TO 3.

3. CHECK APP SENSOR 2 POWER SUPPLY CIRCUIT-II

1. Turn ignition switch OFF.
2. Disconnect ECM harness connector.
3. Check harness continuity between APP sensor terminal 5 and ECM terminal 102. Refer to Wiring Diagram.

Continuity should exist.

OK or NG

OK >> GO TO 4.
NG >> Repair open circuit.

4. CHECK APP SENSOR 2 POWER SUPPLY CIRCUIT-III

Check harness for short to power and short to ground, between the following terminals.

ECM terminal	Sensor terminal	Reference Wiring Diagram
74	Refrigerant pressure sensor terminal 3	EC-1109, "Wiring Diagram"
75	Crankshaft position sensor (POS) terminal 1	EC-871, "Wiring Diagram"
76	EVAP control system pressure sensor terminal 3	EC-930, "Wiring Diagram"
102	APP sensor terminal 5	EC-1052, "Wiring Diagram"

OK or NG

OK >> GO TO 5.
NG >> Repair short to ground or short to power in harness or connectors.

5. CHECK COMPONENTS

Check the following.
- Crankshaft position sensor (POS) (Refer to EC-875, "Component Inspection".)
- Refrigerant pressure sensor (Refer to MTC-27.)
- EVAP control system pressure (Refer to EC-934, "Component Inspection".)

OK or NG

OK >> GO TO 10.
NG >> Replace malfunctioning component.

6. CHECK APP SENSOR 2 GROUND CIRCUIT FOR OPEN AND SHORT

1. Turn ignition switch OFF.
2. Disconnect ECM harness connector.
3. Check harness continuity between ECM terminal 104 and APP sensor terminal 1.
   Refer to Wiring Diagram.

   Continuity should exist.

4. Also check harness for short to ground and short to power.

OK or NG

OK >> GO TO 7.
NG >> Repair open circuit or short to ground or short to power in harness or connectors.

7. CHECK APP SENSOR 2 INPUT SIGNAL CIRCUIT FOR OPEN AND SHORT

1. Check harness continuity between ECM terminal 103 and APP sensor terminal 6.
   Refer to Wiring Diagram.

   Continuity should exist.

2. Also check harness for short to ground and short to power.

OK or NG

OK >> GO TO 8.
NG >> Repair open circuit or short to ground or short to power in harness or connectors.

8. CHECK APP SENSOR

Refer to EC-1055, "Component Inspection".

OK or NG

OK >> GO TO 10.
NG >> GO TO 9.

9. REPLACE ACCELERATOR PEDAL ASSEMBLY

1. Replace accelerator pedal assembly.
2. Perform EC-654, "Accelerator Pedal Released Position Learning".
3. Perform EC-654, "Throttle Valve Closed Position Learning".
4. Perform EC-654, "Idle Air Volume Learning".

>> **INSPECTION END**

10. CHECK INTERMITTENT INCIDENT

Refer to EC-706.

>> **INSPECTION END**

Component Inspection

INFOID:0000000005285624

ACCELERATOR PEDAL POSITION SENSOR

1. Reconnect all harness connectors disconnected.
2. Turn ignition switch ON.

3. Check voltage between ECM terminals 110 (APP sensor 1 signal), 103 (APP sensor 2 signal) and ground under the following conditions.

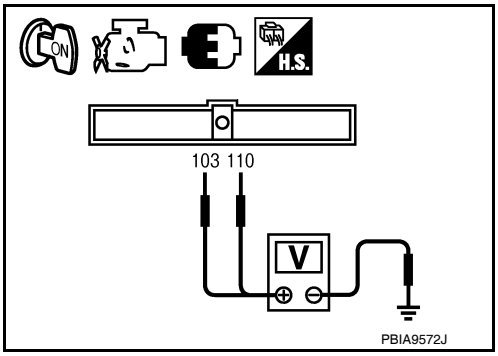

Terminal	Accelerator pedal	Voltage
110 (Accelerator pedal position sensor 1)	Fully released	0.6 - 0.9 V
	Fully depressed	3.9 - 4.7 V
103 (Accelerator pedal position sensor 2)	Fully released	0.3 - 0.6 V
	Fully depressed	1.95 - 2.4 V

4. If NG, replace accelerator pedal assembly and go to next step.
5. Perform EC-654, "Accelerator Pedal Released Position Learning".
6. Perform EC-654, "Throttle Valve Closed Position Learning".
7. Perform EC-654, "Idle Air Volume Learning".

Removal and Installation

INFOID:0000000005285625

ACCELERATOR PEDAL

Refer to ACC-4.

DTC P2135 TP SENSOR

Component Description

INFOID:0000000005285626

Electric throttle control actuator consists of throttle control motor, throttle position sensor, etc. The throttle position sensor responds to the throttle valve movement.
The throttle position sensor has two sensors. These sensors are a kind of potentiometers which transform the throttle valve position into output voltage, and emit the voltage signal to the ECM. In addition, these sensors detect the opening and closing speed of the throttle valve and feed the voltage signals to the ECM. The ECM judges the current opening angle of the throttle valve from these signals and the ECM controls the throttle control motor to make the throttle valve opening angle properly in response to driving condition.

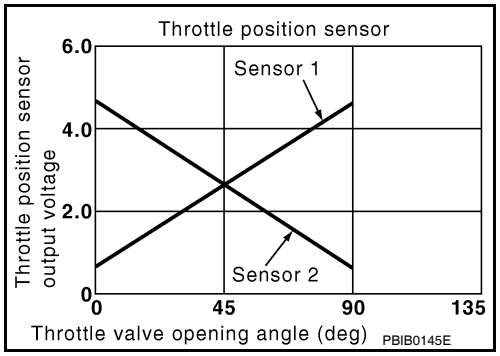

CONSULT-III Reference Value in Data Monitor Mode

INFOID:0000000005285627

Specification data are reference values.

Monitor item	Condition		Specification
TP SEN 1-B1 TP SEN 2-B1*	• Ignition switch: ON (Engine stopped) • Shift lever: D (CVT), 1st (M/T)	Accelerator pedal: Fully released	More than 0.36 V
		Accelerator pedal: Fully depressed	Less than 4.75 V

*: Throttle position sensor 2 signal is converted by ECM internally. Thus, it differs from ECM terminal voltage signal.

On Board Diagnosis Logic

INFOID:0000000005285628

This self-diagnosis has the one trip detection logic.
NOTE:
If DTC P2135 is displayed with DTC P0643, first perform the trouble diagnosis for DTC P0643.
Refer to EC-976.

DTC No.	Trouble diagnosis name	DTC detecting condition	Possible cause
P2135 2135	Throttle position sensor circuit range/performance	Rationally incorrect voltage is sent to ECM compared with the signals from TP sensor 1 and TP sensor 2.	• Harness or connector (TP sensor 1 and 2 circuit is open or short-ed.) • Electric throttle control actuator (TP sensor 1 and 2)

FAIL-SAFE MODE

When the malfunction is detected, the ECM enters fail-safe mode and the MIL lights up.

Engine operation condition in fail-safe mode
The ECM controls the electric throttle control actuator in regulating the throttle opening in order for the idle position to be within +10 degrees. The ECM regulates the opening speed of the throttle valve to be slower than the normal condition. So, the acceleration will be poor.

DTC Confirmation Procedure

INFOID:0000000005285629

NOTE:
If DTC Confirmation Procedure has been previously conducted, always turn ignition switch OFF and wait at least 10 seconds before conducting the next test.
TESTING CONDITION:
Before performing the following procedure, confirm that battery voltage is more than 8 V at idle.

1. Start engine and let it idle for 1 second.
2. Check DTC.
3. If DTC is detected, go to EC-1059, "Diagnosis Procedure".

Wiring Diagram

INFOID:0000000005285630

EC-TPS3-01

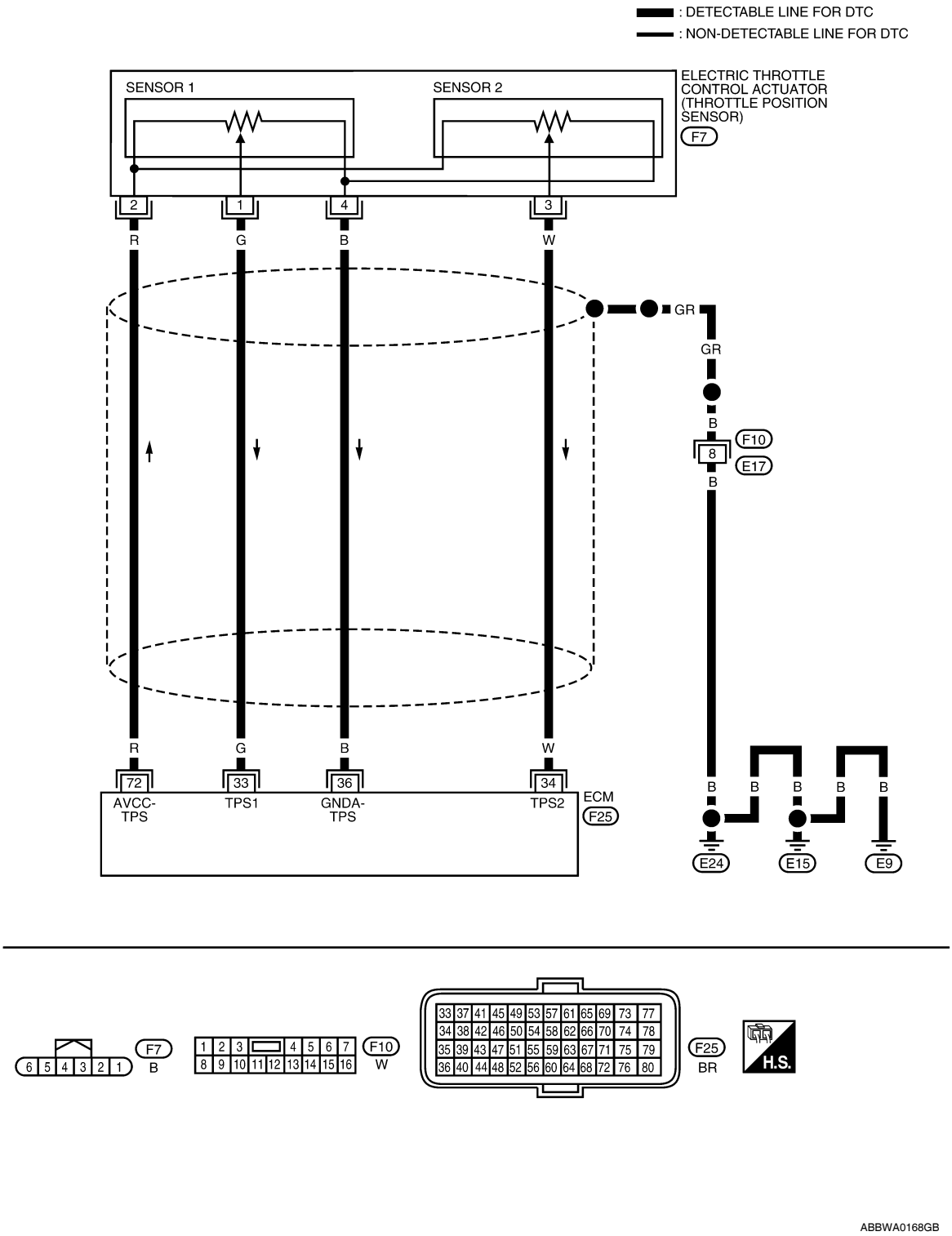

Specification data are reference values and are measured between each terminal and ground.

CAUTION:

Do not use ECM ground terminals when measuring input/output voltage. Doing so may result in damage to the ECM's transistor. Use a ground other than ECM terminals, such as the ground.

TERMINAL NO.	WIRE COLOR	ITEM	CONDITION	DATA (DC Voltage)
33	G	Throttle position sensor 1	**[Ignition switch: ON]** • Engine stopped • Shift lever: D (CVT), 1st (M/T) • Accelerator pedal: Fully released	More than 0.36 V
			[Ignition switch: ON] • Engine stopped • Shift lever: D (CVT), 1st (M/T) • Accelerator pedal: Fully depressed	Less than 4.75 V
34	W	Throttle position sensor 2	**[Ignition switch: ON]** • Engine stopped • Shift lever: D (CVT), 1st (M/T) • Accelerator pedal: Fully released	Less than 4.75 V
			[Ignition switch: ON] • Engine stopped • Shift lever: D (CVT), 1st (M/T) • Accelerator pedal: Fully depressed	More than 0.36 V
36	B	Sensor ground (Throttle position sensor)	**[Engine is running]** • **Warm-up condition** • Idle speed	Approximately 0 V
72	R	Sensor power supply (Throttle position sensor)	**[Ignition switch: ON]**	Approximately 5 V

Diagnosis Procedure

INFOID:0000000005285631

1. CHECK GROUND CONNECTIONS

1. Turn ignition switch OFF.
2. Loosen and retighten ground screws on the body.
   Refer to EC-711, "Ground Inspection".

- ⇦ : Vehicle front
- Body ground (1)

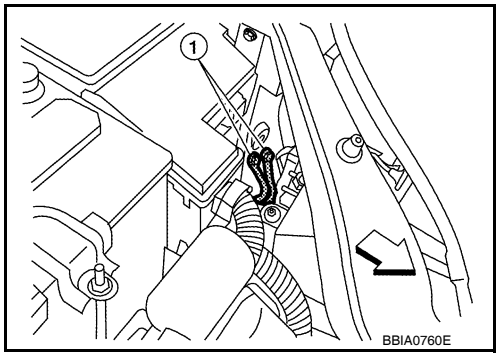

OK or NG

OK >> GO TO 2.
NG >> Repair or replace ground connections.

2. CHECK THROTTLE POSITION SENSOR POWER SUPPLY CIRCUIT

1. Disconnect electric throttle control actuator (1) harness connector.
2. Turn ignition switch ON.

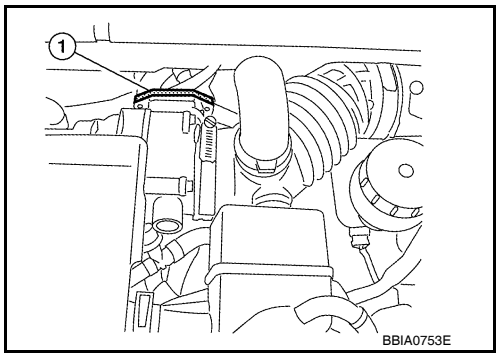

3. Check voltage between electric throttle control actuator terminal 2 and ground with CONSULT-III or tester.

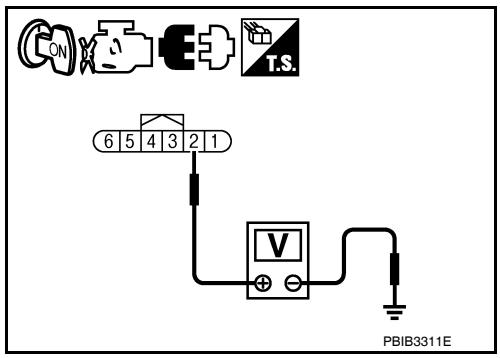

Voltage: Approximately 5 V

OK or NG

OK >> GO TO 3.
NG >> Repair open circuit or short to ground or short to power in harness or connectors.

3. CHECK THROTTLE POSITION SENSOR GROUND CIRCUIT FOR OPEN AND SHORT

1. Turn ignition switch OFF.
2. Disconnect ECM harness connector.
3. Check harness continuity between electric throttle control actuator terminal 4 and ECM terminal 36. Refer to Wiring Diagram.

Continuity should exist.

4. Also check harness for short to ground and short to power.

OK or NG

OK >> GO TO 4.
NG >> Repair open circuit or short to ground or short to power in harness or connectors.

4. CHECK THROTTLE POSITION SENSOR INPUT SIGNAL CIRCUIT FOR OPEN AND SHORT

1. Check harness continuity between the following;
   Electric throttle control actuator terminal 1 and ECM terminal 33,
   Electric throttle control actuator terminal 3 and ECM terminal 34.
   Refer to Wiring Diagram.

Continuity should exist.

2. Also check harness for short to ground and short to power.

OK or NG

OK >> GO TO 5.
NG >> Repair open circuit or short to ground or short to power in harness or connectors.

5. CHECK THROTTLE POSITION SENSOR

Refer to EC-1060, "Component Inspection".

OK or NG

OK >> GO TO 7.
NG >> GO TO 6.

6. REPLACE ELECTRIC THROTTLE CONTROL ACTUATOR

1. Replace the electric throttle control actuator.
2. Perform EC-654, "Throttle Valve Closed Position Learning".
3. Perform EC-654, "Idle Air Volume Learning".

>> **INSPECTION END**

7. CHECK INTERMITTENT INCIDENT

Refer to EC-706.

>> **INSPECTION END**

Component Inspection

INFOID:0000000005285632

THROTTLE POSITION SENSOR

1. Reconnect all harness connectors disconnected.
2. Perform EC-654, "Throttle Valve Closed Position Learning".
3. Turn ignition switch ON.
4. Set shift lever to D position (CVT) or 1st position (M/T).
5. Check voltage between ECM terminals 33 (TP sensor 1 signal), 34 (TP sensor 2 signal) and ground under the following conditions.

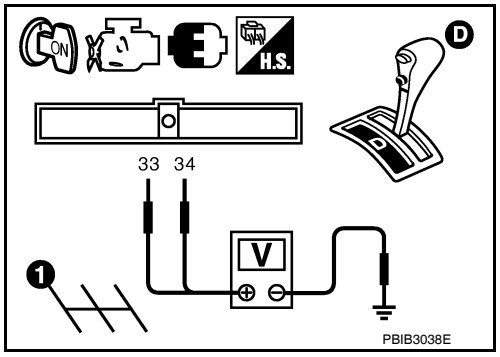

Terminal	Accelerator pedal	Voltage
33 (Throttle position sensor 1)	Fully released	More than 0.36 V
	Fully depressed	Less than 4.75 V
34 (Throttle position sensor 2)	Fully released	Less than 4.75 V
	Fully depressed	More than 0.36 V

6. If NG, replace electric throttle control actuator and go to the next step.
7. Perform EC-654, "Throttle Valve Closed Position Learning".
8. Perform EC-654, "Idle Air Volume Learning".

Removal and Installation

INFOID:0000000005285633

ELECTRIC THROTTLE CONTROL ACTUATOR

Refer to EM-18.

DTC P2138 APP SENSOR

Component Description

INFOID:0000000005285634

The accelerator pedal position sensor is installed on the upper end of the accelerator pedal assembly. The sensor detects the accelerator position and sends a signal to the ECM.
Accelerator pedal position sensor has two sensors. These sensors are a kind of potentiometers which transform the accelerator pedal position into output voltage, and emit the voltage signal to the ECM. In addition, these sensors detect the opening and closing speed of the accelerator pedal and feed the voltage signals to the ECM. The ECM judges the current opening angle of the accelerator pedal from these signals and controls the throttle control motor based on these signals.

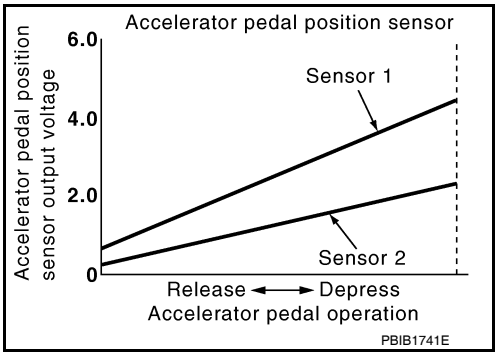

Idle position of the accelerator pedal is determined by the ECM receiving the signal from the accelerator pedal position sensor. The ECM uses this signal for the engine operation such as fuel cut.

CONSULT-III Reference Value in Data Monitor Mode

INFOID:0000000005285635

Specification data are reference values.

Monitor item	Condition		Specification
ACCEL SEN 1	• Ignition switch: ON (Engine stopped)	Accelerator pedal: Fully released	0.6 - 0.9 V
		Accelerator pedal: Fully depressed	4.0 - 4.8 V
ACCEL SEN 2*	• Ignition switch: ON (Engine stopped)	Accelerator pedal: Fully released	0.6 - 0.9 V
		Accelerator pedal: Fully depressed	3.9 - 4.8 V
CLSD THL POS	• Ignition switch: ON (Engine stopped)	Accelerator pedal: Fully released	ON
		Accelerator pedal: Slightly depressed	OFF

*: Accelerator pedal position sensor 2 signal is converted by ECM internally. Thus, it differs from ECM terminal voltage.

On Board Diagnosis Logic

INFOID:0000000005285636

This self-diagnosis has the one trip detection logic.
NOTE:
If DTC P2138 is displayed with DTC P0643, first perform the trouble diagnosis for DTC P0643.
Refer to EC-976.

DTC No.	Trouble diagnosis name	DTC detecting condition	Possible cause
P2138 2138	Accelerator pedal position sensor circuit range/performance	Rationally incorrect voltage is sent to ECM compared with the signals from APP sensor 1 and APP sensor 2.	• Harness or connector (APP sensor 1 and 2 circuit is open or shorted.) [Crankshaft position sensor (POS) circuit is shorted.] (Refrigerant pressure sensor circuit is shorted.) (EVAP control system pressure sensor circuit is shorted.) • Accelerator pedal position sensor (APP sensor 1 and 2) • Crankshaft position sensor (POS) • Refrigerant pressure sensor • EVAP control system pressure sensor

FAIL-SAFE MODE

When the malfunction is detected, ECM enters fail-safe mode and the MIL lights up.

Engine operating condition in fail-safe mode
The ECM controls the electric throttle control actuator in regulating the throttle opening in order for the idle position to be within +10 degrees. The ECM regulates the opening speed of the throttle valve to be slower than the normal condition. So, the acceleration will be poor.

DTC Confirmation Procedure

INFOID:0000000005285637

NOTE:
If DTC Confirmation Procedure has been previously conducted, always turn ignition switch OFF and wait at least 10 seconds before conducting the next test.

TESTING CONDITION:
Before performing the following procedure, confirm that battery voltage is more than 8 V at idle.

1. Start engine and let it idle for 1 second.
2. Check DTC.
3. If DTC is detected, go to EC-1065, "Diagnosis Procedure".

Wiring Diagram

INFOID:0000000005285638

EC-APPS3-01

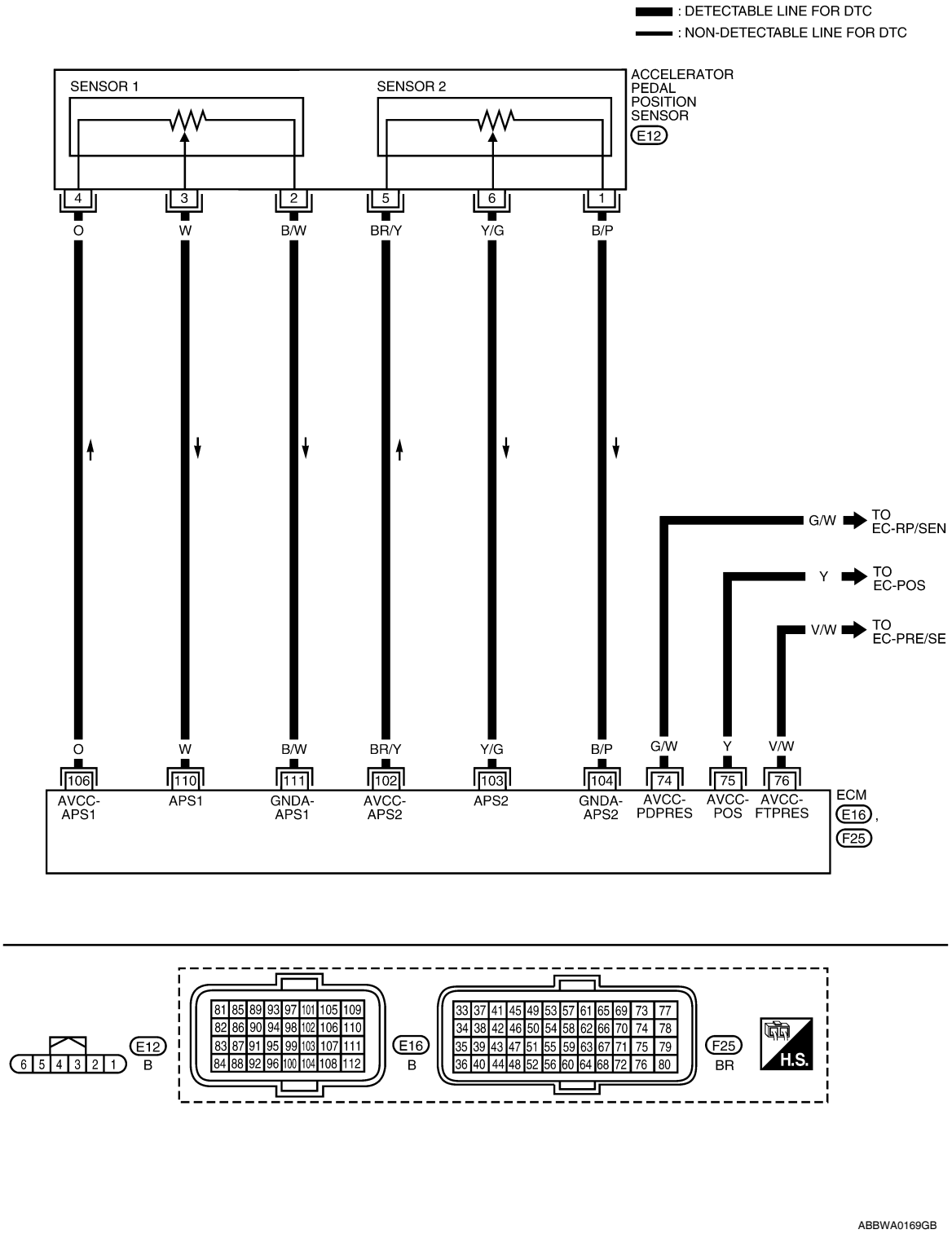

Specification data are reference values and are measured between each terminal and ground.

CAUTION:

Do not use ECM ground terminals when measuring input/output voltage. Doing so may result in damage to the ECM's transistor. Use a ground other than ECM terminals, such as the ground.

TERMINAL NO.	WIRE COLOR	ITEM	CONDITION	DATA (DC Voltage)
74	G/W	Sensor power supply (Refrigerant pressure sensor)	**[Ignition switch: ON]**	Approximately 5 V
75	Y	Sensor power supply [Crankshaft position sensor (POS)]	**[Ignition switch: ON]**	Approximately 5 V
76	V/W	EVAP control system pressure sensor power supply	**[Ignition switch: ON]**	Approximately 5 V
102	BR/Y	Sensor power supply (APP sensor 2)	**[Ignition switch: ON]**	Approximately 5 V
103	Y/G	Accelerator pedal position sensor 2	**[Ignition switch: ON]** • Engine stopped • Accelerator pedal: Fully released	0.3 - 0.6 V
			[Ignition switch: ON] • Engine stopped • Accelerator pedal: Fully depressed	1.95 - 2.4 V
104	B/P	Sensor ground (APP sensor 2)	**[Engine is running]** • **Warm-up condition** • Idle speed	Approximately 0 V
106	O	Sensor power supply (APP sensor 1)	**[Ignition switch: ON]**	Approximately 5 V
110	W	Accelerator pedal position sensor 1	**[Ignition switch: ON]** • Engine stopped • Accelerator pedal: Fully released	0.6 - 0.9 V
			[Ignition switch: ON] • Engine stopped • Accelerator pedal: Fully depressed	3.9 - 4.7 V
111	B/W	Sensor ground (APP sensor 1)	**[Engine is running]** • **Warm-up condition** • Idle speed	Approximately 0 V

Diagnosis Procedure

INFOID:0000000005285639

1. CHECK GROUND CONNECTIONS

1. Turn ignition switch OFF.
2. Loosen and retighten ground screws on the body. Refer to EC-711, "Ground Inspection".

- ⇦ : Vehicle front
- Body ground (1)

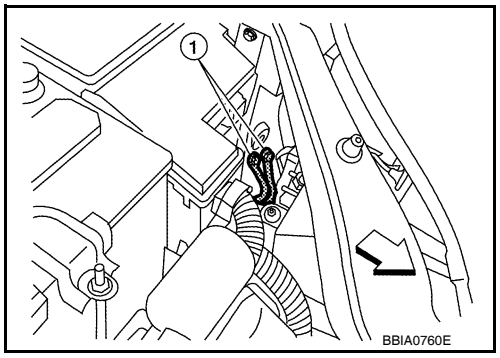

OK or NG

OK >> GO TO 2.
NG >> Repair or replace ground connections.

2. CHECK APP SENSOR 1 POWER SUPPLY CIRCUIT

1. Disconnect accelerator pedal position (APP) sensor (1) harness connector.
2. Turn ignition switch ON.

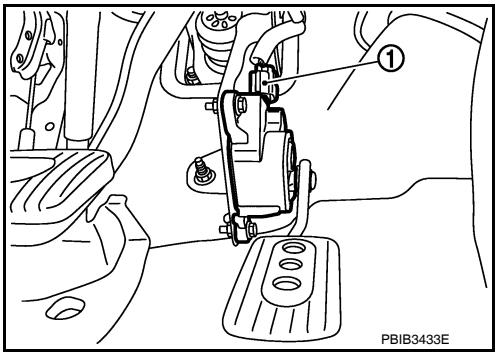

3. Check voltage between APP sensor terminal 4 and ground with CONSULT-III or tester.

Voltage: Approximately 5 V

OK or NG

OK >> GO TO 3.
NG >> Repair open circuit or short to ground or short to power in harness or connectors.

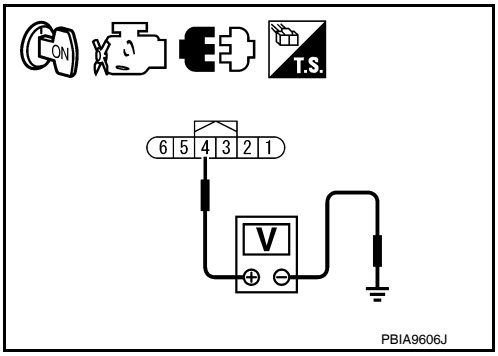

3. CHECK APP SENSOR 2 POWER SUPPLY CIRCUIT-I

1. Turn ignition switch ON.
2. Check voltage between APP sensor terminal 5 and ground with CONSULT-III or tester.

Voltage: Approximately 5 V

OK or NG

OK >> GO TO 7.
NG >> GO TO 4.

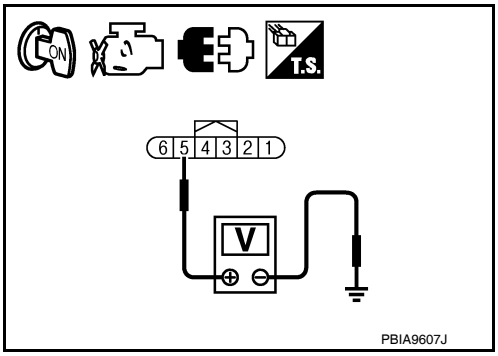

4. CHECK APP SENSOR 2 POWER SUPPLY CIRCUIT-II

1. Turn ignition switch OFF.
2. Disconnect ECM harness connector.
3. Check harness continuity between APP sensor terminal 5 and ECM terminal 102. Refer to Wiring Diagram.

Continuity should exist.

OK or NG

OK >> GO TO 5.
NG >> Repair open circuit.

5. CHECK APP SENSOR 2 POWER SUPPLY CIRCUIT-III

Check harness for short to power and short to ground, between the following terminals.

ECM terminal	Sensor terminal	Reference Wiring Diagram
74	Refrigerant pressure sensor terminal 3	EC-1109, "Wiring Diagram"
75	Crankshaft position sensor (POS) terminal 1	EC-871, "Wiring Diagram"
76	EVAP control system pressure sensor terminal 3	EC-930, "Wiring Diagram"
102	APP sensor terminal 5	EC-1052, "Wiring Diagram"

OK or NG

OK >> GO TO 6.
NG >> Repair short to ground or short to power in harness or connectors.

6. CHECK COMPONENTS

Check the following.
- Crankshaft position sensor (POS) (Refer to EC-875, "Component Inspection".)
- Refrigerant pressure sensor (Refer to MTC-27.)
- EVAP control system pressure (Refer to EC-934, "Component Inspection".)

OK or NG

OK >> GO TO 11.
NG >> Replace malfunctioning component.

7. CHECK APP SENSOR GROUND CIRCUIT FOR OPEN AND SHORT

1. Turn ignition switch OFF.
2. Disconnect ECM harness connector.
3. Check harness continuity between the following;
   ECM terminal 111 and APP sensor terminal 2,
   ECM terminal 104 and APP sensor terminal 1.
   Refer to Wiring Diagram.

   Continuity should exist.

4. Also check harness for short to ground and short to power.

OK or NG

OK >> GO TO 8.
NG >> Repair open circuit or short to ground or short to power in harness or connectors.

8. CHECK APP SENSOR INPUT SIGNAL CIRCUIT FOR OPEN AND SHORT

1. Check harness continuity between the following;
   ECM terminal 110 and APP sensor terminal 3,
   ECM terminal 103 and APP sensor terminal 6.
   Refer to Wiring Diagram.

   Continuity should exist.

2. Also check harness for short to ground and short to power.

OK or NG

OK >> GO TO 9.
NG >> Repair open circuit or short to ground or short to power in harness or connectors.

9. CHECK APP SENSOR

Refer to EC-1068, "Component Inspection".

OK or NG

OK >> GO TO 11.
NG >> GO TO 10.

10. REPLACE ACCELERATOR PEDAL ASSEMBLY

1. Replace accelerator pedal assembly.
2. Perform EC-654, "Accelerator Pedal Released Position Learning".
3. Perform EC-654, "Throttle Valve Closed Position Learning".
4. Perform EC-654, "Idle Air Volume Learning".

>> **INSPECTION END**

11. CHECK INTERMITTENT INCIDENT

Refer to EC-706.

>> **INSPECTION END**

Component Inspection

INFOID:0000000005285640

ACCELERATOR PEDAL POSITION SENSOR

1. Reconnect all harness connectors disconnected.
2. Turn ignition switch ON.
3. Check voltage between ECM terminals 110 (APP sensor 1 signal), 103 (APP sensor 2 signal) and ground under the following conditions.

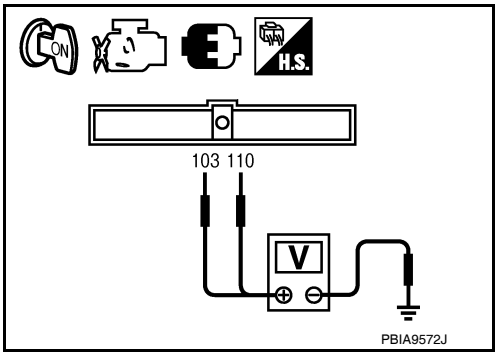

Terminal	Accelerator pedal	Voltage
110 (Accelerator pedal position sensor 1)	Fully released	0.6 - 0.9 V
	Fully depressed	3.9 - 4.7 V
103 (Accelerator pedal position sensor 2)	Fully released	0.3 - 0.6 V
	Fully depressed	1.95 - 2.4 V

4. If NG, replace accelerator pedal assembly and go to next step.
5. Perform EC-654, "Accelerator Pedal Released Position Learning".
6. Perform EC-654, "Throttle Valve Closed Position Learning".
7. Perform EC-654, "Idle Air Volume Learning".

Removal and Installation

INFOID:0000000005285641

ACCELERATOR PEDAL

Refer to ACC-4.

DTC P2A00 A/F SENSOR 1

Component Description

INFOID:0000000005285642

The air fuel ratio (A/F) sensor 1 is a planar one-cell limit current sensor. The sensor element of the A/F sensor 1 is composed an electrode layer, which transports ions. It has a heater in the element.
The sensor is capable of precise measurement λ = 1, but also in the lean and rich range. Together with its control electronics, the sensor outputs a clear, continuous signal throughout a wide λ range.
The exhaust gas components diffuse through the diffusion layer at the sensor cell. An electrode layer is applied voltage, and this current relative oxygen density in lean. Also this current relative hydrocarbon density in rich.
Therefore, the A/F sensor 1 is able to indicate air fuel ratio by this electrode layer of current. In addition, a heater is integrated in the sensor to ensure the required operating temperature of about 800°C (1,472°F).

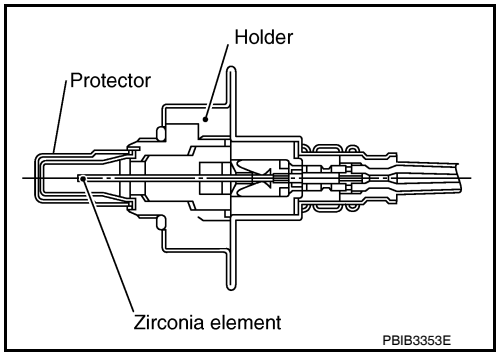

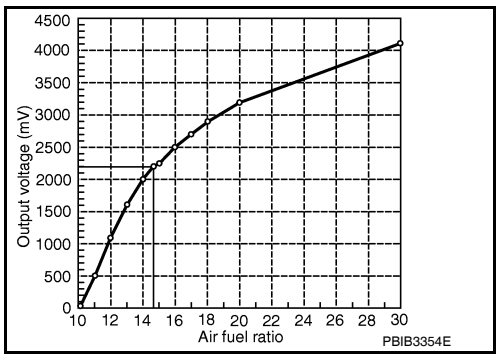

CONSULT-III Reference Value in Data Monitor Mode

INFOID:0000000005285643

Specification data are reference values.

Monitor item	Condition		Specification
A/F SEN1 (B1)	• Engine: After warming up	Maintaining engine speed at 2,000 rpm	Fluctuates around 2.2 V

On Board Diagnosis Logic

INFOID:0000000005285644

To judge the malfunction, the A/F signal computed by ECM from the A/F sensor 1 signal is monitored not to be shifted to LEAN side or RICH side.

DTC No.	Trouble diagnosis name	DTC detecting condition	Possible Cause
P2A00 2A00	Air fuel ratio (A/F) sensor 1 circuit range/performance	• The output voltage computed by ECM from the A/F sensor 1 signal is shifted to the lean side for a specified period. • The A/F signal computed by ECM from the A/F sensor 1 signal is shifted to the rich side for a specified period.	• Air fuel ratio (A/F) sensor 1 • Air fuel ratio (A/F) sensor 1 heater • Fuel pressure • Fuel injector • Intake air leaks

DTC Confirmation Procedure

INFOID:0000000005285645

NOTE:
If DTC Confirmation Procedure has been previously conducted, always turn ignition switch OFF and wait at least 10 seconds before conducting the next test.
TESTING CONDITION:
Before performing the following procedure, confirm that battery voltage is more than 11 V at idle.

WITH CONSULT-III
1. Start engine and warm it up to normal operating temperature.
2. Turn ignition switch OFF and wait at least 10 seconds.

3. Turn ignition switch ON and select “SELF-LEARNING CONT” in “WORK SUPPORT” mode with CONSULT-III.
4. Clear the self-learning coefficient by touching “CLEAR”.
5. Turn ignition switch OFF and wait at least 10 seconds.
6. Start engine and keep the engine speed between 3,500 and 4,000 rpm for 1 minute under no load.
7. Let engine idle for 1 minute.
8. Keep engine speed between 2,500 and 3,000 rpm for 20 minutes.
9. Check 1st trip DTC.
10. If 1st trip DTC is detected, go to EC-1072, "Diagnosis Procedure".

WITH GST

1. Start engine and warm it up to normal operating temperature.
2. Turn ignition switch OFF and wait at least 10 seconds.
3. Disconnect mass air flow sensor (1) harness connector.
4. Start engine and let it idle for at least 5 seconds.
5. Stop engine and reconnect mass air flow sensor harness connector.
6. Select Service $03 with GST and make sure that DTC P0102 is detected.
7. Select Service $04 with GST and erase the DTC P0102.
8. Start engine and keep the engine speed between 3,500 and 4,000 rpm for 1 minute under no load.
9. Let engine idle for 1 minute.
10. Keep engine speed between 2,500 and 3,000 rpm for 20 minutes.
11. Select Service $07 with GST.
    If 1st trip DTC is detected, go to EC-1072, "Diagnosis Procedure".

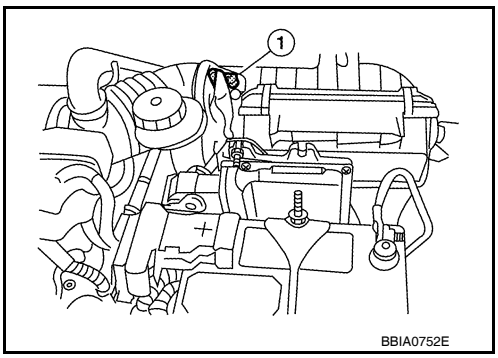

Wiring Diagram

INFOID:0000000005285646

EC-A/F-01

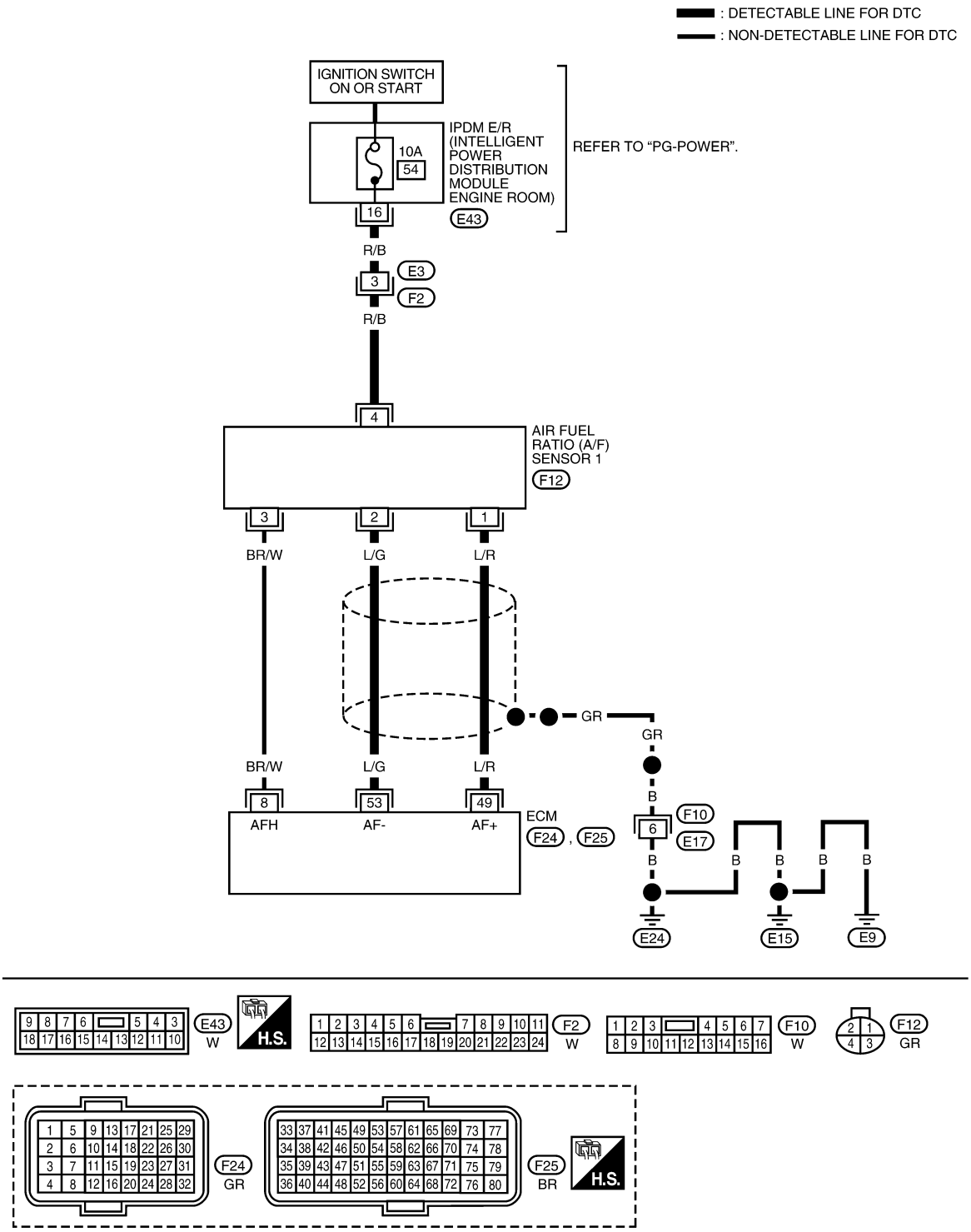

Specification data are reference values and are measured between each terminal and ground.
Pulse signal is measured by CONSULT-III.

CAUTION:

Do not use ECM ground terminals when measuring input/output voltage. Doing so may result in damage to the ECM's transistor. Use a ground other than ECM terminals, such as the ground.

TERMINAL NO.	WIRE COLOR	ITEM	CONDITION	DATA (DC Voltage)
8	BR/W	A/F sensor 1 heater	**[Engine is running]** • **Warm-up condition** • Idle speed (More than 140 seconds after starting engine)	Approximately 2.9 - 8.8 V★ 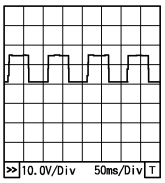 PBIA8148J
49	L/R	A/F sensor 1	**[Engine is running]** • **Warm-up condition** • Engine speed: 2,000 rpm	Approximately 1.8 V Output voltage varies with air fuel ratio.
53	L/G	A/F sensor 1	**[Ignition switch: ON]**	Approximately 2.2 V

★: Average voltage for pulse signal (Actual pulse signal can be confirmed by oscilloscope.)

Diagnosis Procedure

INFOID:0000000005285647

1. CHECK GROUND CONNECTIONS

1. Turn ignition switch OFF.
2. Loosen and retighten ground screws on the body.
   Refer to EC-711, "Ground Inspection".

- ⇦ : Vehicle front
- Body ground (1)

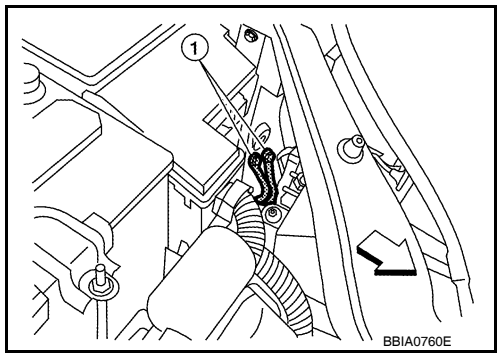

OK or NG

OK >> GO TO 2.
NG >> Repair or replace ground connections.

2. RETIGHTEN AIR FUEL RATIO (A/F) SENSOR 1

Loosen and retighten the air fuel ratio (A/F) sensor 1.
Refer to EM-24, "Removal and Installation".

>> GO TO 3.

3. CHECK FOR INTAKE AIR LEAK

1. Start engine and run it at idle.
2. Listen for an intake air leak after the mass air flow sensor.

OK or NG

OK >> GO TO 4.
NG >> Repair or replace.

4. CLEAR THE SELF-LEARNING DATA.

With CONSULT-III

1. Start engine and warm it up to normal operating temperature.
2. Select “SELF-LEARNING CONT” in “WORK SUPPORT” mode with CONSULT-III.
3. Clear the self-learning control coefficient by touching “CLEAR”.
4. Run engine for at least 10 minutes at idle speed.
5. Check 1st trip DTC.
   Is the 1st trip DTC P0171 and P0172 detected?

Is it difficult to start engine?

Without CONSULT-III

1. Start engine and warm it up to normal operating temperature.
2. Turn ignition switch OFF.
3. Disconnect mass air flow sensor (1) harness connector.
4. Restart engine and let it idle for at least 5 seconds.
5. Stop engine and reconnect mass air flow sensor harness connector.
6. Make sure DTC P0102 is displayed.
7. Erase the DTC memory. Refer to EC-617, "Emission-related Diagnostic Information".
8. Make sure DTC P0000 is displayed.
9. Run engine for at least 10 minutes at idle speed.
   Is the 1st trip DTC P0171 and P0172 detected?
   Is it difficult to start engine?

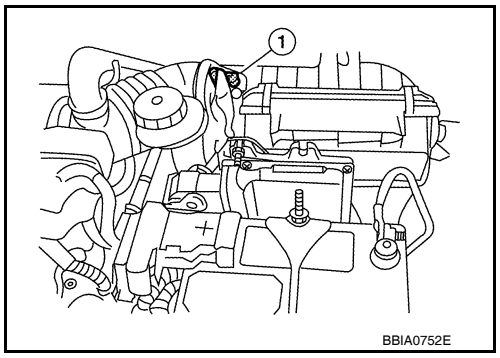

Yes or No

Yes >> Perform trouble diagnosis for DTC P0171 or P0172. Refer to EC-828 or EC-834.
No >> GO TO 5.

5. CHECK HARNESS CONNECTOR

1. Turn ignition switch OFF.
2. Disconnect A/F sensor 1 harness connector (1).
- Air fuel ratio (A/F) sensor (2)
3. Check harness connector for water.

Water should no exist.

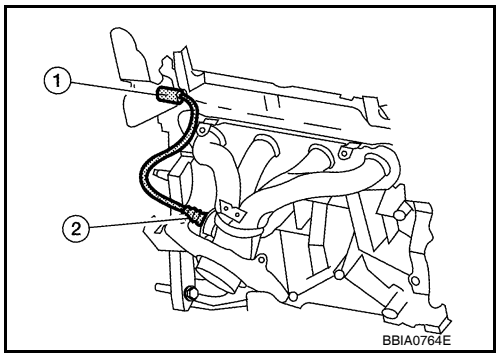

OK or NG

OK >> GO TO 6.
NG >> Repair or replace harness connector.

6. CHECK AIR FUEL RATIO (A/F) SENSOR 1 POWER SUPPLY CIRCUIT

1. Turn ignition switch ON.
2. Check voltage between A/F sensor 1 terminal 4 and ground with CONSULT-III or tester.

Voltage: Battery voltage

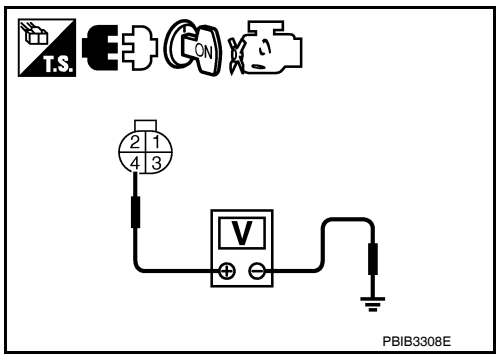

OK or NG

OK >> GO TO 8.
NG >> GO TO 7.

7. DETECT MALFUNCTIONING PART

Check the following.
- Harness connectors E3, F2
- 10 A fuse
- Harness for open or short between A/F sensor 1 and fuse

>> Repair or replace harness or connectors.

8. CHECK A/F SENSOR 1 INPUT SIGNAL CIRCUIT FOR OPEN AND SHORT

1. Turn ignition switch OFF.
2. Disconnect ECM harness connector.
3. Check harness continuity between the following terminals. Refer to Wiring Diagram.

A/F sensor 1 terminal	ECM terminal
1	49
2	53

Continuity should exist.

4. Check harness continuity between ECM terminals 49, 53 or A/F sensor 1 terminals 1, 2 and ground. Refer to Wiring Diagram.

Continuity should not exist.

5. Also check harness for short to power.

OK or NG

OK >> GO TO 9.
NG >> Repair open circuit or short to ground or short to power in harness or connectors.

9. CHECK A/F SENSOR 1 HEATER

Refer to EC-726, "Component Inspection".

OK or NG

OK >> GO TO 10.
NG >> GO TO 11.

10. CHECK INTERMITTENT INCIDENT

Perform EC-706.

OK or NG

OK >> GO TO 11.
NG >> Repair or replace.

11. REPLACE AIR FUEL RATIO (A/F) SENSOR 1

Replace air fuel ratio (A/F) sensor 1.

CAUTION:

- **Discard any air fuel ratio (A/F) sensor which has been dropped from a height of more than 0.5 m (19.7 in) onto a hard surface such as a concrete floor; use a new one.**
- **Before installing new air fuel ratio (A/F) sensor, clean exhaust system threads using Heated Oxygen Sensor Thread Cleaner tool J-43897-18 or J-43897-12 and approved anti-seize lubricant.**

>> GO TO 12.

12. CONFIRM A/F ADJUSTMENT DATA

1. Turn ignition switch ON.
2. Select “A/F ADJ-B1” in “DATA MONITOR” mode with CONSULT-III.
3. Make sure that “0.000” is displayed on CONSULT-III screen.

OK or NG

OK >> **INSPECTION END**
NG >> GO TO 13.

13. CLEAR THE SELF-LEARNING DATA

With CONSULT-III

1. Start engine and warm it up to normal operating temperature.
2. Select “SELF-LEARNING CONT” in “WORK SUPPORT” mode with CONSULT-III.
3. Clear the self-learning control coefficient by touching “CLEAR”.

Without CONSULT-III

1. Start engine and warm it up to normal operating temperature.
2. Turn ignition switch OFF.

3. Disconnect mass air flow sensor harness (1) connector.
4. Restart engine and let it idle for at least 5 seconds.
5. Stop engine and reconnect mass air flow sensor harness connector.
6. Make sure DTC P0102 is displayed.
7. Erase the DTC memory. Refer to EC-617, "Emission-related Diagnostic Information".
8. Make sure DTC P0000 is displayed.

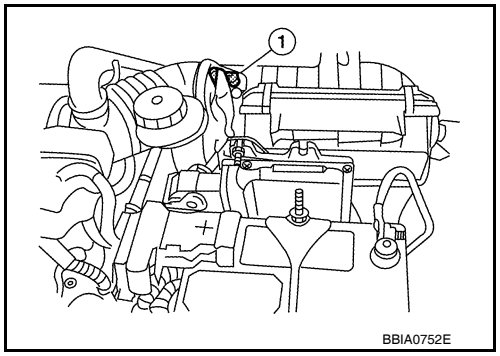

>> GO TO 14.

14. CONFIRM A/F ADJUSTMENT DATA

1. Turn ignition switch OFF and then ON.
2. Select “A/F ADJ-B1” in “DATA MONITOR” mode with CONSULT-III.
3. Make sure that “0.000” is displayed on CONSULT-III screen.

>> **INSPECTION END**

Removal and Installation

INFOID:0000000005285648

AIR FUEL RATIO SENSOR

Refer to EM-23.

ASCD BRAKE SWITCH

Component Description

INFOID:0000000005285649

When depress on the brake pedal, ASCD brake switch (1) is turned OFF and stop lamp switch (2) is turned ON. ECM detects the state of the brake pedal (3) by this input of two kinds (ON/OFF signal)
Refer to EC-597 for the ASCD function.

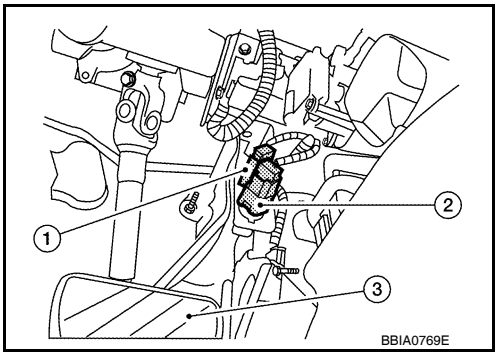

CONSULT-III Reference Value in Data Monitor Mode

INFOID:0000000005285650

Specification data are reference values.

Monitor item	Condition		Specification
BRAKE SW1 (ASCD brake switch)	• Ignition switch: ON	• Brake pedal: Fully released (CVT) • Brake pedal and clutch pedal: Fully released (M/T)	ON
		• Brake pedal: Slightly depressed (CVT) • Brake pedal and/or clutch pedal: Slightly depressed (M/T)	OFF
BRAKE SW2 (Stop lamp switch)	• Ignition switch: ON	Brake pedal: Fully released	OFF
		Brake pedal: Slightly depressed	ON

Wiring Diagram

INFOID:0000000005285651

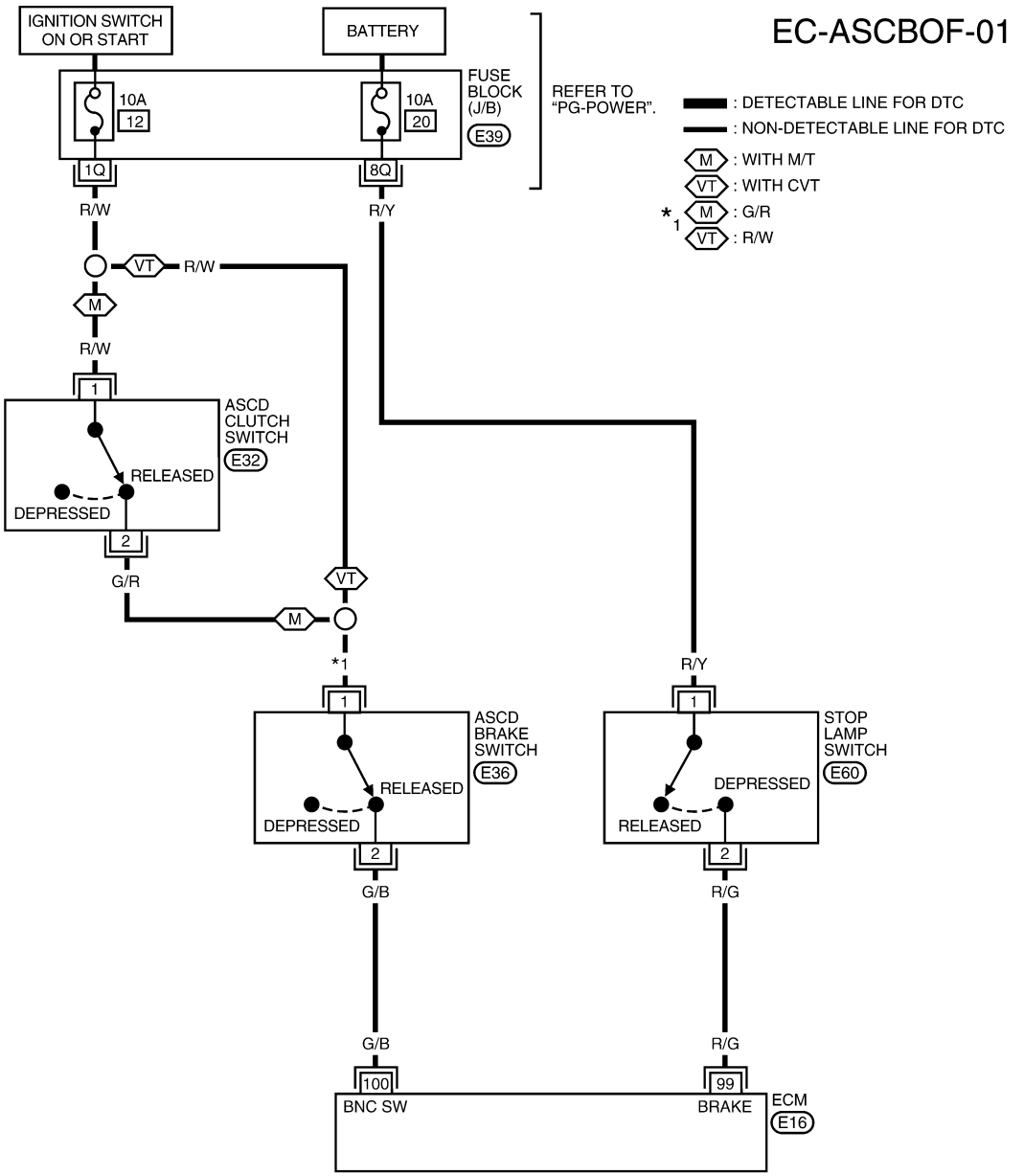

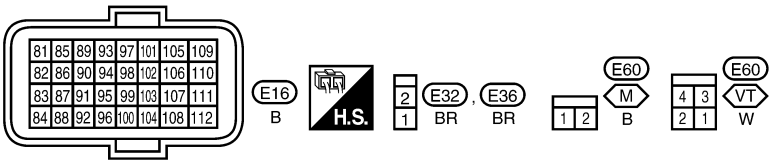

AABWA0252GB

Specification data are reference values and are measured between each terminal and ground.

CAUTION:

Do not use ECM ground terminals when measuring input/output voltage. Doing so may result in damage to the ECM's transistor. Use a ground other than ECM terminals, such as the ground.

TERMINAL NO.	WIRE COLOR	ITEM	CONDITION	DATA (DC Voltage)
99	R/G	Stop lamp switch	**[Ignition switch: ON]** • Brake pedal: Fully released	Approximately 0 V
			[Ignition switch: ON] • Brake pedal: Slightly depressed	BATTERY VOLTAGE (11 - 14 V)
100	G/B	ASCD brake switch	**[Ignition switch: ON]** • Brake pedal: Slightly depressed (CVT) • Brake pedal and/or clutch pedal: Slightly depressed (M/T)	Approximately 0 V
			[Ignition switch: ON] • Brake pedal: Fully released (CVT) • Brake pedal and clutch pedal: Fully released (M/T)	BATTERY VOLTAGE (11 - 14 V)

Diagnosis Procedure

INFOID:0000000005285652

1. CHECK OVERALL FUNCTION-I

With CONSULT-III

1. Turn ignition switch ON.
2. Select “BRAKE SW1” in “DATA MONITOR” mode with CONSULT-III.
3. Check “BRAKE SW1” indication under the following conditions.

M/T models

Condition	Indication
Clutch pedal and/or brake pedal: Slightly depressed	OFF
Clutch pedal and brake pedal: Fully released	ON

CVT models

Condition	Indication
Brake pedal: Slightly depressed	OFF
Brake pedal: Fully released	ON

Without CONSULT-III

1. Turn ignition switch ON.
2. Check voltage between ECM terminal 100 and ground under the following conditions.

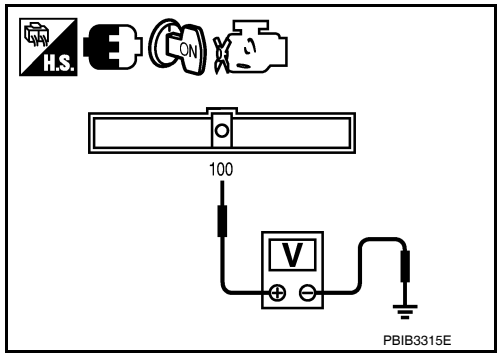

M/T models

Condition	Voltage
Clutch pedal and/or brake pedal: Slightly depressed	Approximately 0 V
Clutch pedal and brake pedal: Fully released	Battery voltage

CVT models

Condition	Voltage
Brake pedal: Slightly depressed	Approximately 0 V
Brake pedal: Fully released	Battery voltage

OK or NG

OK >> GO TO 2.
NG >> GO TO 3.

2. CHECK OVERALL FUNCTION-II

With CONSULT-III

Check “BRAKE SW2” indication in “DATA MONITOR” mode.

Condition	Indication
Brake pedal: Fully released	OFF
Brake pedal: Slightly depressed	ON

Without CONSULT-III

Check voltage between ECM terminal 99 and ground under the following conditions.

Condition	Voltage
Brake pedal: Fully released	Approximately 0 V
Brake pedal: Slightly depressed	Battery voltage

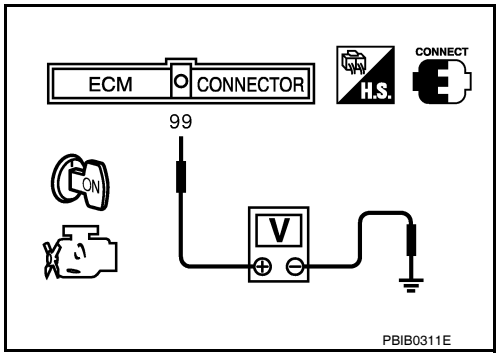

OK or NG

OK >> **INSPECTION END**
NG >> GO TO 11.

3. CHECK ASCD BRAKE SWITCH POWER SUPPLY

1. Turn ignition switch OFF.
2. Disconnect ASCD brake switch (1) harness connector.
- Stop lamp switch (2)
- Brake pedal (3)
3. Turn ignition switch ON.

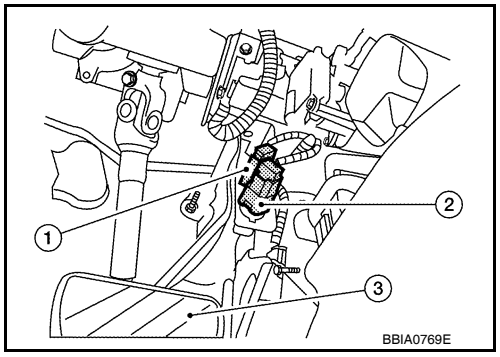

4. Check voltage between ASCD brake switch terminal 1 and ground with CONSULT-III or tester.

Voltage : Battery voltage

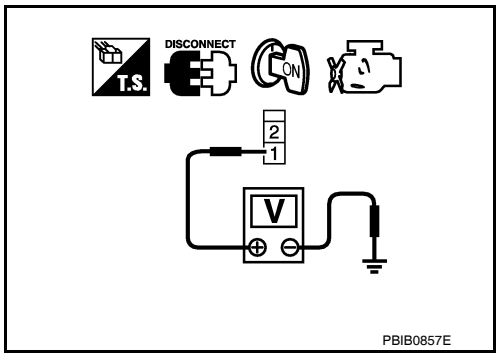

OK or NG

OK >> GO TO 8.
NG (M/T models) >>GO TO 4.
NG (CVT models)>>GO TO 6.

4. CHECK ASCD CLUTCH SWITCH POWER SUPPLY CIRCUIT

1. Turn ignition switch OFF.

2. Disconnect ASCD clutch switch (1) harness connector.
- Clutch pedal (2)
3. Turn ignition switch ON.

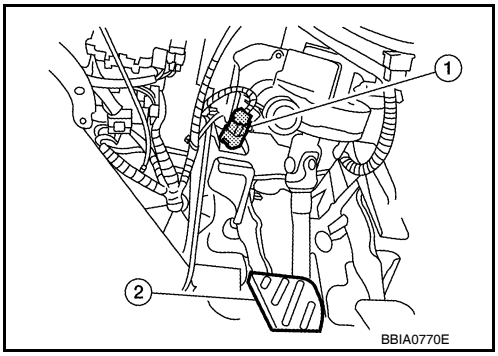

4. Check voltage between ASCD clutch switch terminal 1 and ground with CONSULT-III or tester.

Voltage: Battery voltage

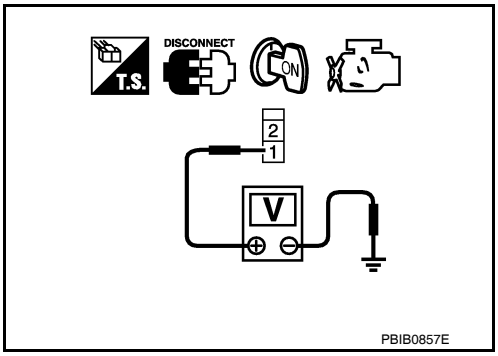

OK or NG

OK >> GO TO 7.
NG >> GO TO 5.

5. DETECT MALFUNCTIONING PART

Check the following.
- 10 A fuse
- Harness for open or short between ASCD clutch switch and fuse

>> Repair open circuit or short to ground or short to power in harness or connectors.

6. DETECT MALFUNCTIONING PART

Check the following.
- 10 A fuse
- Harness for open or short between ASCD brake switch and fuse

>> Repair open circuit or short to ground or short to power in harness or connectors.

7. CHECK ASCD CLUTCH SWITCH INPUT SIGNAL CIRCUIT FOR OPEN AND SHORT

1. Turn ignition switch OFF.
2. Check harness continuity between ASCD brake switch terminal 1 and ASCD clutch switch terminal 2. Refer to Wiring Diagram.

Continuity should exist.

3. Also check harness for short to ground and short to power.

OK or NG

OK >> GO TO 10.
NG >> Repair open circuit or short to ground or short to power in harness or connectors.

8. CHECK ASCD BRAKE SWITCH INPUT SIGNAL CIRCUIT FOR OPEN AND SHORT

1. Turn ignition switch OFF.
2. Disconnect ECM harness connector.
3. Check harness continuity between ECM terminal 100 and ASCD brake switch terminal 2. Refer to Wiring Diagram.

Continuity should exist.

4. Also check harness for short to ground and short to power.

OK or NG

OK >> GO TO 9.
NG >> Repair open circuit or short to ground or short to power in harness or connectors.

9. CHECK ASCD BRAKE SWITCH

Refer to EC-1019, "Component Inspection".

OK or NG

OK >> GO TO 15.
NG >> Replace ASCD brake switch.

10. CHECK ASCD CLUTCH SWITCH

Refer to EC-1019, "Component Inspection"

OK or NG

OK >> GO TO 15.
NG >> Replace ASCD clutch switch.

11. CHECK STOP LAMP SWITCH POWER SUPPLY CIRCUIT

1. Turn ignition switch OFF.
2. Disconnect stop lamp switch (2) harness connector.
- ASCD brake switch (1)
- Brake pedal (3)

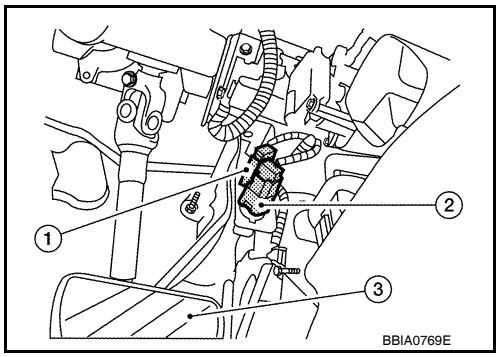

3. Check voltage between stop lamp switch terminal 1 and ground with CONSULT -III or tester.

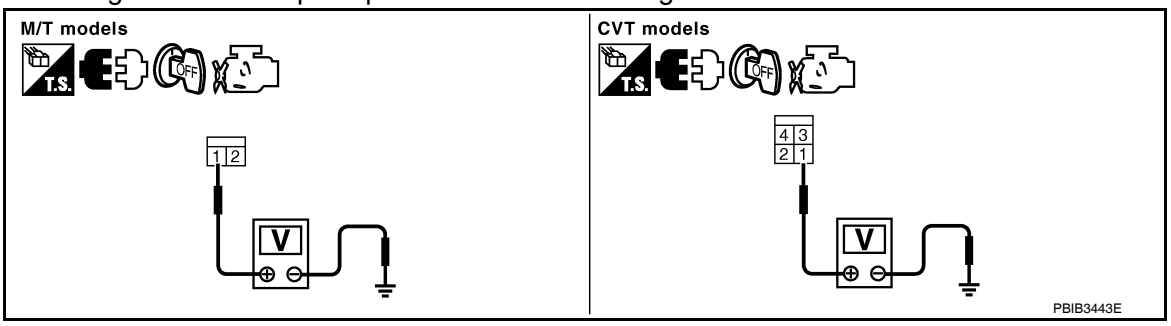

Voltage: Battery voltage

OK or NG

OK >> GO TO 13.
NG >> GO TO 12.

12. DETECT MALFUNCTIONING PART

Check the following.
- 10 A fuse
- Harness for open or short between stop lamp switch and battery

>> Repair open circuit or short to ground or short to power in harness or connectors.

13. CHECK STOP LAMP SWITCH INPUT SIGNAL CIRCUIT FOR OPEN AND SHORT

1. Disconnect ECM harness connector.
2. Check harness continuity between ECM terminal 99 and stop lamp switch terminal 2.
   Refer to Wiring Diagram.

Continuity should exist.

3. Also check harness for short to ground and short to power.

OK or NG

OK >> GO TO 14.
NG >> Repair open circuit or short to ground or short to power in harness or connectors.

14. CHECK STOP LAMP SWITCH

Refer to EC-1019, "Component Inspection"

OK or NG

OK >> GO TO 15.
NG >> Replace stop lamp switch.

15. CHECK INTERMITTENT INCIDENT

Refer to EC-706.

>> **INSPECTION END**

Component Inspection

INFOID:0000000005285653

ASCD BRAKE SWITCH

1. Turn ignition switch OFF.
2. Disconnect ASCD brake switch harness connector.
3. Check continuity between ASCD brake switch terminals 1 and 2 under the following conditions.

Condition	Continuity
Brake pedal: Fully released.	Should exist.
Brake pedal: Slightly depressed.	Should not exist.

If NG, adjust ASCD brake switch installation, refer to BR-8, and perform step 3 again.

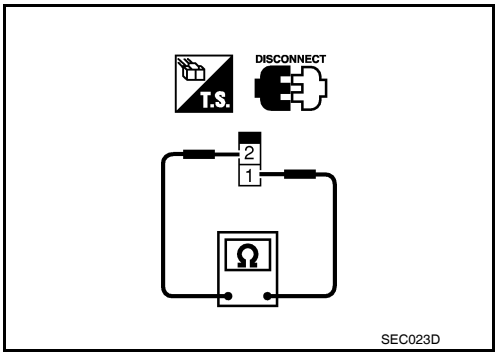

ASCD CLUTCH SWITCH

1. Turn ignition switch OFF.
2. Disconnect ASCD clutch switch harness connector.
3. Check continuity between ASCD clutch switch terminals 1 and 2 under the following conditions.

Condition	Continuity
Clutch pedal: Fully released.	Should exist.
Clutch pedal: Slightly depressed.	Should not exist.

If NG, adjust ASCD clutch switch installation, refer to CL-6, and perform step 3 again.

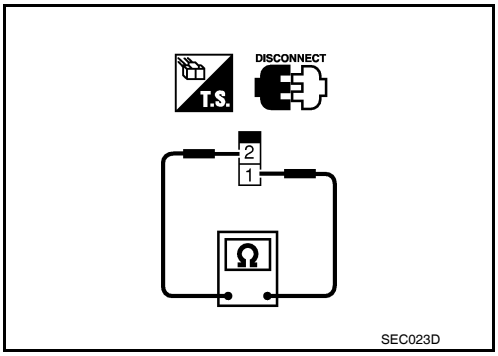

STOP LAMP SWITCH

1. Turn ignition switch OFF.
2. Disconnect stop lamp switch harness connector.

3. Check continuity between stop lamp switch terminals 1 and 2 under the following conditions.

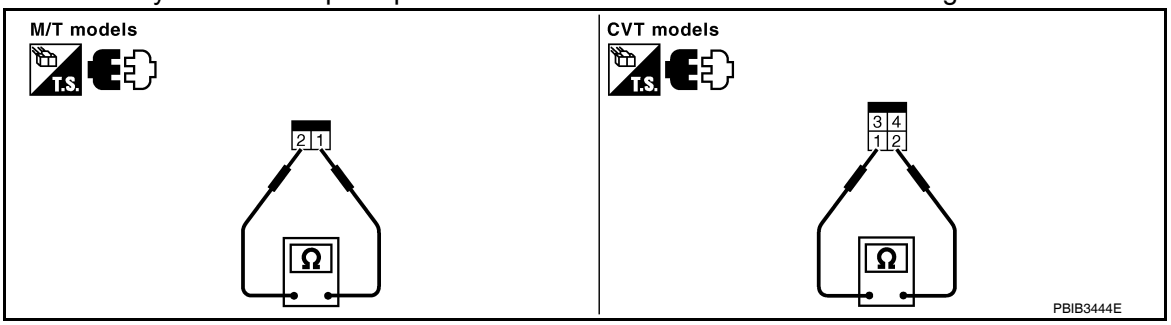

Condition	Continuity
Brake pedal: Fully released.	Should not exist.
Brake pedal: Slightly depressed.	Should exist.

If NG, adjust stop lamp switch installation, refer to BR-8, and perform step 3 again.

ASCD INDICATOR

Component Description

INFOID:0000000005285654

ASCD indicator lamp illuminates to indicate ASCD operation status. Lamp has two indicators, CRUISE and SET, and is integrated in combination meter.
CRUISE indicator illuminates when MAIN switch on ASCD steering switch is turned ON to indicate that ASCD system is ready for operation.
SET indicator illuminates when following conditions are met.
- CRUISE indicator is illuminated.
- SET/COAST switch on ASCD steering switch is turned ON while vehicle speed is within the range of ASCD setting.

SET indicator remains lit during ASCD control.
Refer to EC-597 for the ASCD function.

CONSULT-III Reference Value in Data Monitor Mode

INFOID:0000000005285655

Specification data are reference value.

Monitor item	Condition		Specification
CRUISE LAMP	• Ignition switch: ON	MAIN switch: Pressed at 1st time → 2nd	ON → OFF
SET LAMP	• MAIN switch: ON • Vehicle: Between 40 km/h (25 MPH) and 144 km/h (89 MPH)	ASCD: Operating	ON
		ASCD: Not operating	OFF

Wiring Diagram

INFOID:0000000005285656

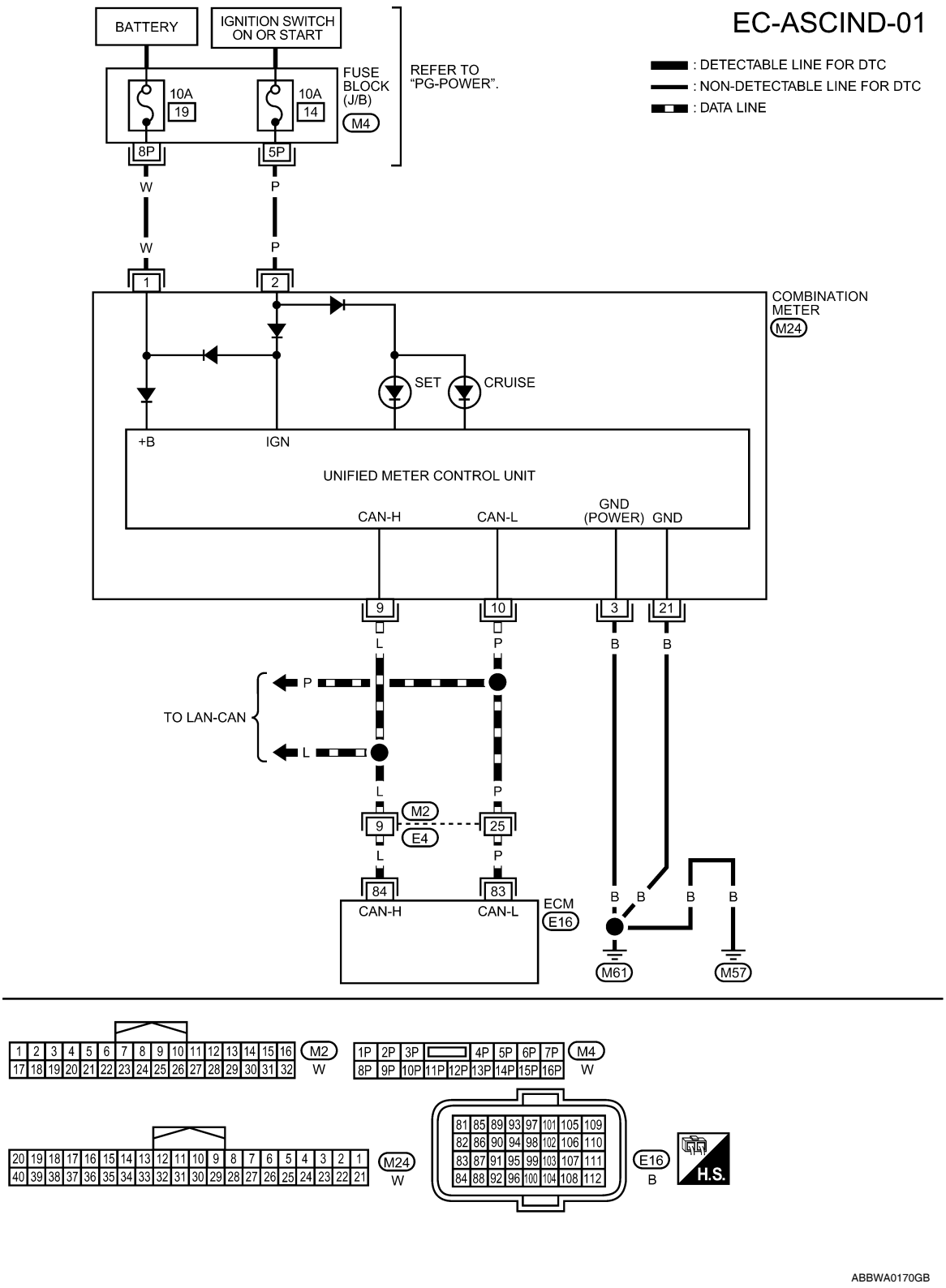

Diagnosis Procedure

INFOID:0000000005285657

1. CHECK OVERALL FUNCTION

Check ASCD indicator under the following conditions.

ASCD INDICATOR	CONDITION		SPECIFICATION
CRUISE LAMP	• Ignition switch: ON	MAIN switch: Pressed at 1st time → 2nd	ON → OFF
SET LAMP	• MAIN switch: ON • Vehicle: Between 40 km/h (25 MPH) and 144 km/h (89 MPH)	ASCD: Operating	ON
		ASCD: Not operating	OFF

OK or NG

OK >> **INSPECTION END**
NG >> GO TO 2.

2. CHECK DTC

Check that DTC UXXXX is not displayed.

Yes or No

Yes >> Perform trouble diagnoses for DTC UXXXX.
No >> GO TO 3.

3. CHECK COMBINATION METER OPERATION

Does combination meter operate normally?

Yes or No

Yes >> GO TO 4.
No >> Check combination meter circuit. Refer to DI-6.

4. CHECK INTERMITTENT INCIDENT

Refer to EC-706.

>> **INSPECTION END**

ELECTRICAL LOAD SIGNAL

CONSULT-III Reference Value in Data Monitor Mode

INFOID:0000000005285658

Specification data are reference values.

Monitor item	Condition		Specification
LOAD SIGNAL	• Ignition switch: ON	Rear window defogger switch is ON and/or lighting switch is in 2nd position.	ON
		Rear window defogger switch is OFF and lighting switch is OFF.	OFF
HEATER FAN SW	• Ignition switch: ON	Heater fan: Operating.	ON
		Heater fan: Not operating.	OFF

Diagnosis Procedure

INFOID:0000000005285659

1. CHECK LOAD SIGNAL CIRCUIT OVERALL FUNCTION-I

1. Turn ignition switch ON.
2. Check “LOAD SIGNAL” in “DATA MONITOR” mode with CONSULT-III under the following conditions.

Condition	LOAD SIGNAL
Lighting switch: ON at 2nd position	ON
Lighting switch: OFF	OFF

OK or NG

OK >> GO TO 2.
NG >> GO TO 4.

2. CHECK LOAD SIGNAL CIRCUIT OVERALL FUNCTION-II

Check “LOAD SIGNAL” in “DATA MONITOR” mode with CONSULT-III under the following conditions.

Condition	LOAD SIGNAL
Rear window defogger switch: ON	ON
Rear window defogger switch: OFF	OFF

OK or NG

OK >> GO TO 3.
NG >> GO TO 5.

3. CHECK HEATER FAN SIGNAL CIRCUIT OVERALL FUNCTION

Check “HEATER FAN SW” in “DATA MONITOR” mode with CONSULT-III under the following conditions.

Condition	HEATER FAN SW
Heater fan control switch: ON	ON
Heater fan control switch: OFF	OFF

OK or NG

OK >> **INSPECTION END**.
NG >> GO TO 6.

4. CHECK HEADLAMP SYSTEM

Refer to LT-4 or LT-25.

>> **INSPECTION END**

5. CHECK REAR WINDOW DEFOGGER SYSTEM

Refer to GW-54.

>> **INSPECTION END**

6. CHECK HEATER FAN CONTROL SYSTEM

Refer to MTC-27.

>> **INSPECTION END**

FUEL INJECTOR

Component Description

INFOID:0000000005285660

The fuel injector is a small, precise solenoid valve. When the ECM supplies a ground to the fuel injector circuit, the coil in the fuel injector is energized. The energized coil pulls the ball valve back and allows fuel to flow through the fuel injector into the intake manifold. The amount of fuel injected depends upon the injection pulse duration. Pulse duration is the length of time the fuel injector remains open. The ECM controls the injection pulse duration based on engine fuel needs.

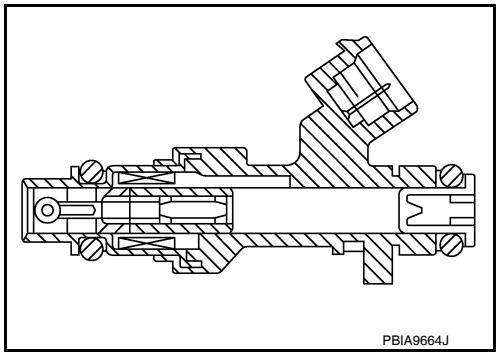

CONSULT-III Reference Value in Data Monitor Mode

INFOID:0000000005285661

Specification data are reference values.

Monitor item	Condition		Specification
B/FUEL SCHDL	See EC-698.		
INJ PULSE-B1	• Engine: After warming up • Air conditioner switch: OFF • Shift lever: P or N (CVT), Neutral (M/T) • No load	Idle	2.0 - 3.0 msec
		2,000 rpm	1.9 - 2.9 msec

Wiring Diagram

INFOID:0000000005285662

EC-INJECT-01

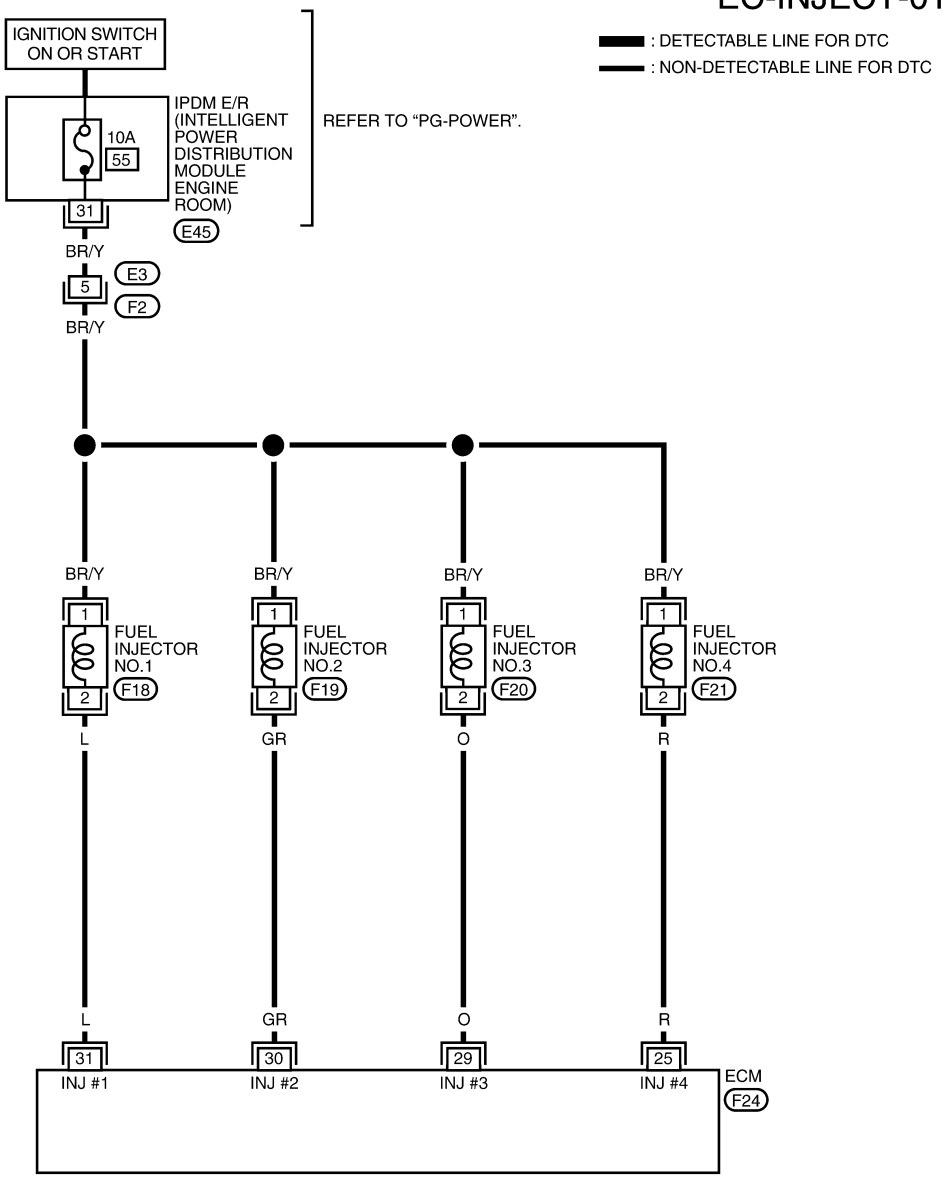

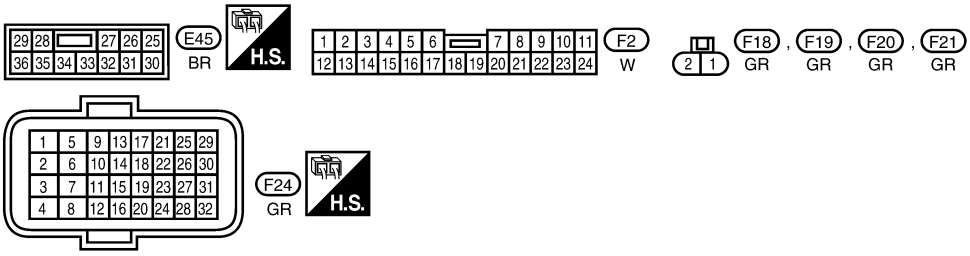

BBWA2907E

Specification data are reference values and are measured between each terminal and ground.
Pulse signal is measured by CONSULT-III.

CAUTION:

Do not use ECM ground terminals when measuring input/output voltage. Doing so may result in damage to the ECM's transistor. Use a ground other than ECM terminals, such as the ground.

TERMINAL NO.	WIRE COLOR	ITEM	CONDITION	DATA (DC Voltage)
25 29 30 31	R O GR L	Fuel injector No. 4 Fuel injector No. 3 Fuel injector No. 2 Fuel injector No. 1	**[Engine is running]** • **Warm-up condition** • Idle speed **NOTE:** The pulse cycle changes depending on rpm at idle	BATTERY VOLTAGE (11 - 14 V)★ 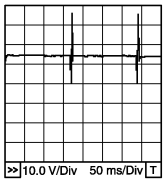 PBIB0529E
			[Engine is running] • **Warm-up condition** • Engine speed: 2,000 rpm	BATTERY VOLTAGE (11 - 14 V)★ 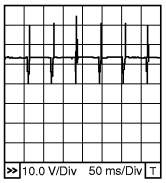 PBIA4943J

★: Average voltage for pulse signal (Actual pulse signal can be confirmed by oscilloscope.)

Diagnosis Procedure

INFOID:0000000005285663

1. INSPECTION START

Turn ignition switch to START.
Is any cylinder ignited?

Yes or No

Yes >> GO TO 2.
No >> GO TO 3.

2. CHECK OVERALL FUNCTION

With CONSULT-III

1. Start engine.
2. Perform “POWER BALANCE” in “ACTIVE TEST” mode with CONSULT-III.
3. Make sure that each circuit produces a momentary engine speed drop.

Without CONSULT-III

1. Start engine.
2. Listen to each fuel injector operating sound.

Clicking noise should be heard.

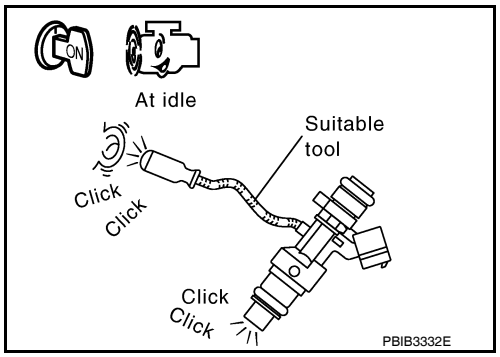

OK or NG

OK >> **INSPECTION END**
NG >> GO TO 3.

3. CHECK FUEL INJECTOR POWER SUPPLY CIRCUIT

1. Turn ignition switch OFF.
2. Disconnect fuel injector (1) harness connector.
3. Turn ignition switch ON.

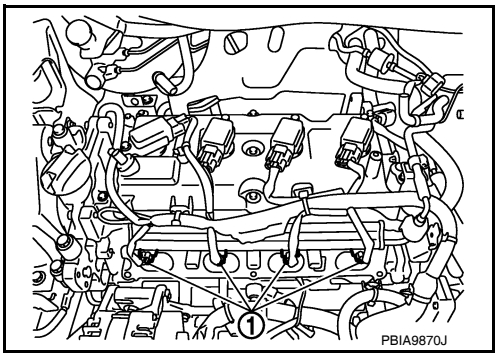

4. Check voltage between fuel injector terminal 1 and ground with CONSULT-III or tester.

Voltage: Battery voltage

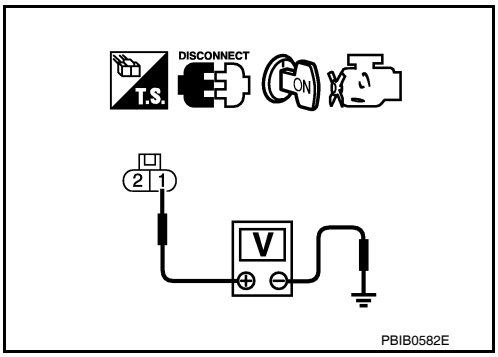

OK or NG

OK >> GO TO 5.
NG >> GO TO 4.

4. DETECT MALFUNCTIONING PART

Check the following.
- Harness connectors E3, F2
- IPDM E/R harness connector E45
- 10 A fuse
- Harness for open or short between fuel injector and fuse

>> Repair open circuit or short to ground or short to power in harness or connectors.

5. CHECK FUEL INJECTOR OUTPUT SIGNAL CIRCUIT FOR OPEN AND SHORT

1. Turn ignition switch OFF.
2. Disconnect ECM harness connector.
3. Check harness continuity between fuel injector terminal 2 and ECM terminals 25, 29, 30, 31. Refer to Wiring Diagram.

Continuity should exist.

4. Also check harness for short to ground and short to power.

OK or NG

OK >> GO TO 6.
NG >> Repair open circuit or short to ground or short to power in harness or connectors.

6. CHECK FUEL INJECTOR

Refer to EC-1093, "Component Inspection".

OK or NG

OK >> GO TO 7.
NG >> Replace fuel injector.

7. CHECK INTERMITTENT INCIDENT

Refer to EC-706.

>> **INSPECTION END**

Component Inspection

INFOID:0000000005285664

FUEL INJECTOR

1. Disconnect fuel injector harness connector.
2. Check resistance between terminals as shown in the figure.

Resistance: 11.1 - 14.5 Ω [at 10 - 60°C (50 - 140°F)]

3. If NG, replace fuel injector.

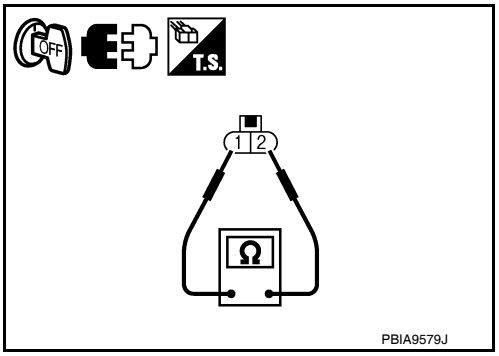

Removal and Installation

INFOID:0000000005285665

FUEL INJECTOR

Refer to EM-36.

FUEL PUMP

Description

INFOID:0000000005285666

SYSTEM DESCRIPTION

Sensor	Input Signal to ECM	ECM Function	Actuator
Crankshaft position sensor (POS) Camshaft position sensor (PHASE)	Engine speed*	Fuel pump control	Fuel pump relay
Battery	Battery voltage*		

*: ECM determines the start signal status by the signals of engine speed and battery voltage.

The ECM activates the fuel pump for several seconds after the ignition switch is turned ON to improve engine start ability. If the ECM receives a engine speed signal from the crankshaft position sensor (POS) and camshaft position sensor (PHASE), it knows that the engine is rotating, and causes the pump to operate. If the engine speed signal is not received when the ignition switch is ON, the engine stalls. The ECM stops pump operation and prevents battery discharging, thereby improving safety. The ECM does not directly drive the fuel pump. It controls the ON/OFF fuel pump relay, which in turn controls the fuel pump.

Condition	Fuel pump operation
Ignition switch is turned to ON	Operates for 1 second
Engine running and cranking	Operates
Engine: Stopped	Stops in 1.5 seconds
Except as shown above	Stops

COMPONENT DESCRIPTION

A turbine type design fuel pump is used in the fuel tank.

- Fuel level sensor unit and fuel pump (1)
- Fuel pressure regulator (2)
- Fuel level sensor (3)
- Fuel tank temperature sensor (4)

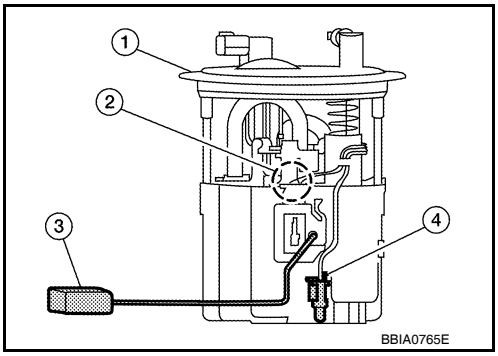

CONSULT-III Reference Value in Data Monitor Mode

INFOID:0000000005285667

Specification data are reference values.

Monitor item	Condition	Specification
FUEL PUMP RLY	• For 1 second after turning ignition switch ON • Engine running or cranking	ON
	• Except above conditions	OFF

Wiring Diagram

INFOID:0000000005285668

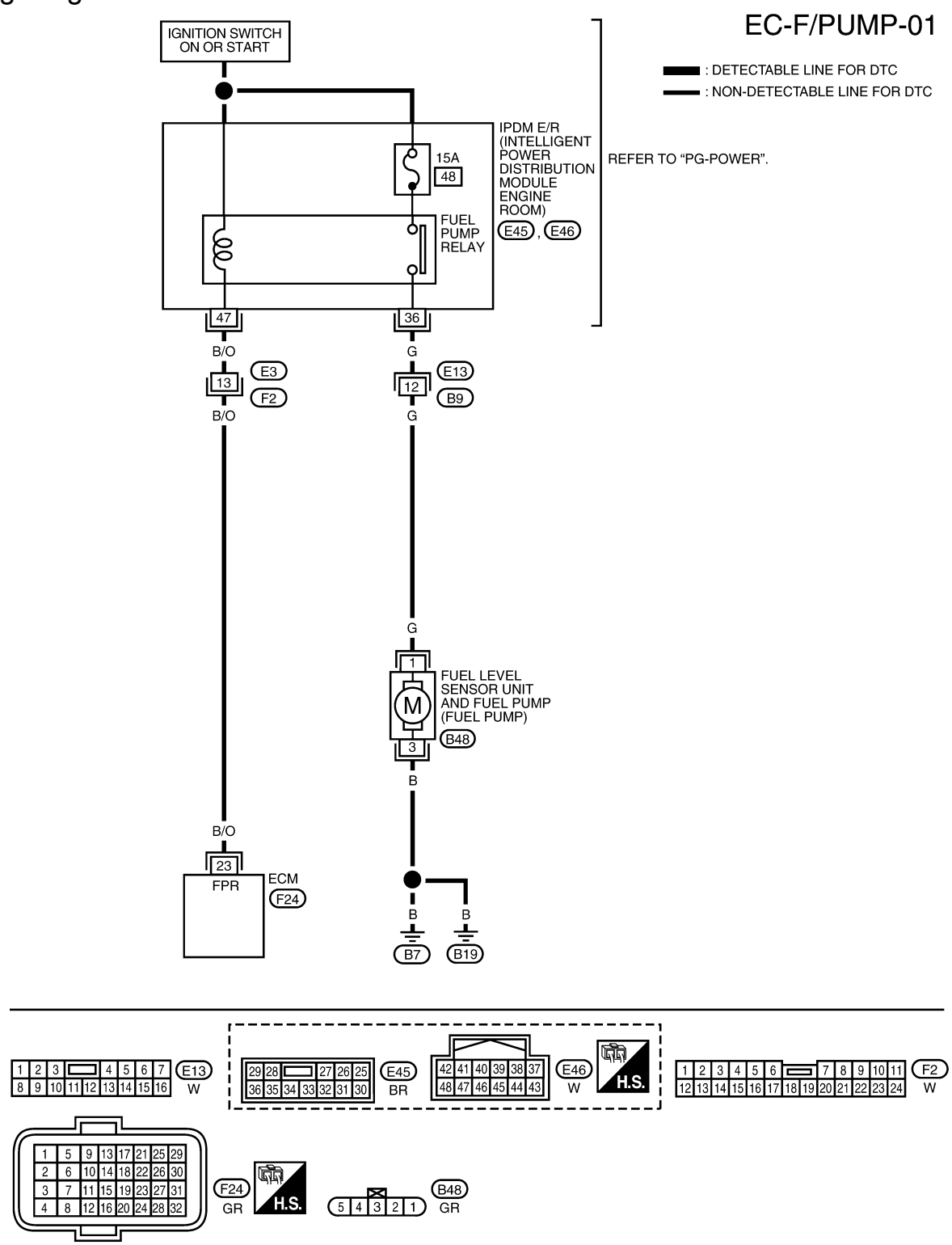

BBWA2908E

Specification data are reference values and are measured between each terminal and ground.

CAUTION:

Do not use ECM ground terminals when measuring input/output voltage. Doing so may result in damage to the ECM's transistor. Use a ground other than ECM terminals, such as the ground.

TERMINAL NO.	WIRE COLOR	ITEM	CONDITION	DATA (DC Voltage)
23	B/O	Fuel pump relay	**[Ignition switch: ON]** • For 1 second after turning ignition switch ON **[Engine is running]**	0 - 1.0 V
			[Ignition switch: ON] • More than 1 second after turning ignition switch ON	BATTERY VOLTAGE (11 - 14 V)

Diagnosis Procedure

INFOID:0000000005285669

1. CHECK OVERALL FUNCTION

1. Turn ignition switch ON.
2. Pinch fuel feed hose (1) with two fingers.

- This illumination is shows the view with intake air duct removed.

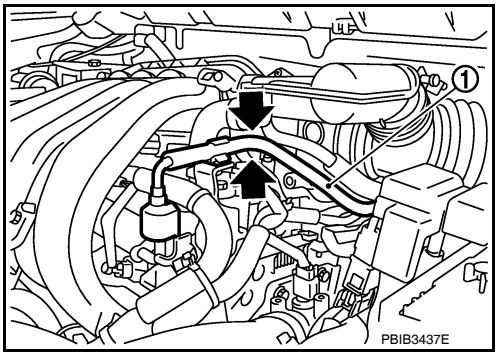

Fuel pressure pulsation should be felt on the fuel feed hose for 1 second after ignition switch is turned ON.

OK or NG

OK >> **INSPECTION END**
NG >> GO TO 2.

2. CHECK FUEL PUMP POWER SUPPLY CIRCUIT-I

1. Turn ignition switch OFF.
2. Disconnect ECM harness connector.
3. Turn ignition switch ON.
4. Check voltage between ECM terminal 23 and ground with CONSULT-III or tester.

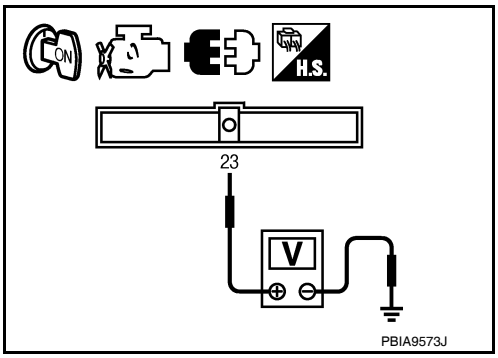

Voltage: Battery voltage

OK or NG

OK >> GO TO 5.
NG >> GO TO 3.

3. CHECK FUEL PUMP POWER SUPPLY CIRCUIT-II

1. Turn ignition switch OFF.
2. Disconnect IPDM E/R harness connector E46.
3. Turn ignition switch ON.
4. Check voltage between IPDM E/R terminal 47 and ground with CONSULT-III or tester.

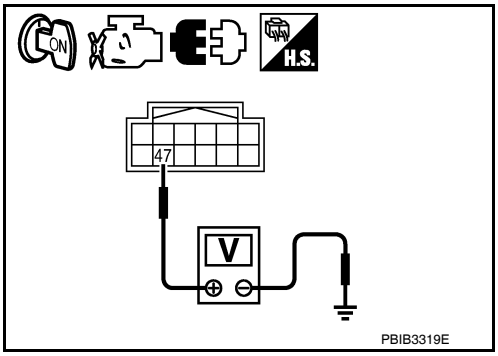

Voltage: Battery voltage

OK or NG

OK >> GO TO 4.
NG >> GO TO 11.

4. DETECT MALFUNCTIONING PART

Check the following.
- Harness connectors E3, F2
- Harness for open or short between IPDM E/R and ECM

>> Repair open circuit or short to ground or short to power in harness or connectors.

5. CHECK FUEL PUMP POWER SUPPLY CIRCUIT-III

1. Turn ignition switch OFF.
2. Reconnect all harness connectors disconnected.
3. Disconnect “fuel level sensor unit and fuel pump” harness connector (1).
- This illumination is shows the view with inspection hole cover removed.
4. Turn ignition switch ON.

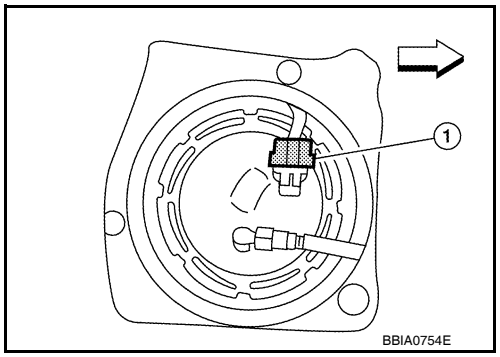

5. Check voltage between “fuel level sensor unit and fuel pump” terminal 1 and ground with CONSULT-III or tester.

Voltage: Battery voltage should exist for 1 second after ignition switch is turned ON.

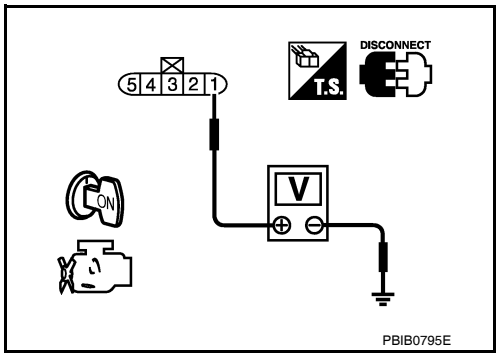

OK or NG

OK >> GO TO 9.
NG >> GO TO 6.

6. CHECK 15 A FUSE

1. Turn ignition switch OFF.
2. Disconnect 15 A fuse.
3. Check 15 A fuse.

OK or NG

OK >> GO TO 7.
NG >> Replace fuse.

7. CHECK FUEL PUMP POWER SUPPLY CIRCUIT-IV

1. Disconnect IPDM E/R harness connector E45.
2. Check harness continuity between IPDM E/R terminal 36 and “fuel level sensor unit and fuel pump” terminal 1. Refer to Wiring Diagram.

Continuity should exist.

3. Also check harness for short to ground and short to power.

OK or NG

OK >> GO TO 11.
NG >> GO TO 8.

8. DETECT MALFUNCTIONING PART

Check the following.
- Harness connectors E13, B9
- Harness for open or short between IPDM E/R and “fuel level sensor unit and fuel pump”

>> Repair open circuit or short to ground or short to power in harness or connectors.

9. CHECK FUEL PUMP GROUND CIRCUIT

1. Check harness continuity between “fuel level sensor unit and fuel pump” terminal 3 and ground. Refer to Wiring Diagram.

Continuity should exist.

2. Also check harness for short to power.

OK or NG

OK >> GO TO 10.
NG >> Repair or replace harness or connectors.

10. CHECK FUEL PUMP

Refer to EC-1098, "Component Inspection".

OK or NG

OK >> GO TO 11.
NG >> Replace fuel pump.

11. CHECK INTERMITTENT INCIDENT

Refer to EC-706.

OK or NG

OK >> Replace IPDM E/R. Refer to PG-17.
NG >> Repair or replace harness or connectors.

Component Inspection

INFOID:0000000005285670

FUEL PUMP

1. Disconnect “fuel level sensor unit and fuel pump” harness connector.
2. Check resistance between “fuel level sensor unit and fuel pump” terminals 1 and 3.

Resistance: Approximately 0.2 - 5.0 Ω [at 25°C (77°F)]

3. If NG, replace “fuel level sensor unit and fuel pump”.

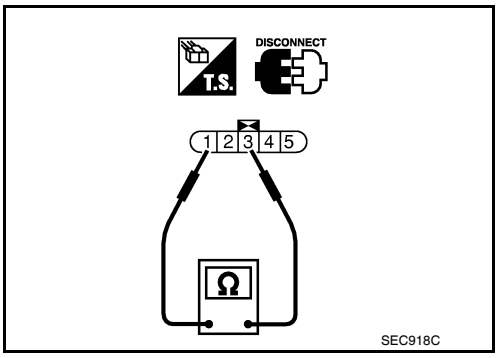

Removal and Installation

INFOID:0000000005285671

FUEL PUMP

Refer to FL-6.

IGNITION SIGNAL

Component Description

INFOID:0000000005285672

IGNITION COIL & POWER TRANSISTOR

The ignition signal from the ECM is sent to and amplified by the power transistor. The power transistor turns ON and OFF the ignition coil (1) primary circuit. This ON/OFF operation induces the proper high voltage in the coil secondary circuit.

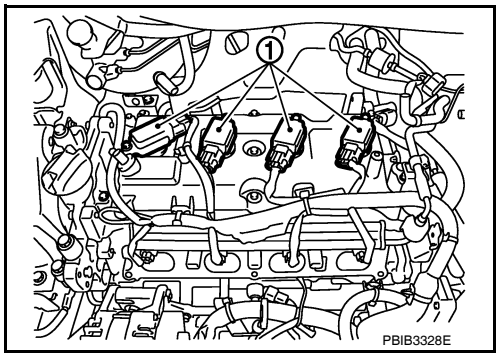

Wiring Diagram

INFOID:0000000005285673

EC-IGNSYS-01

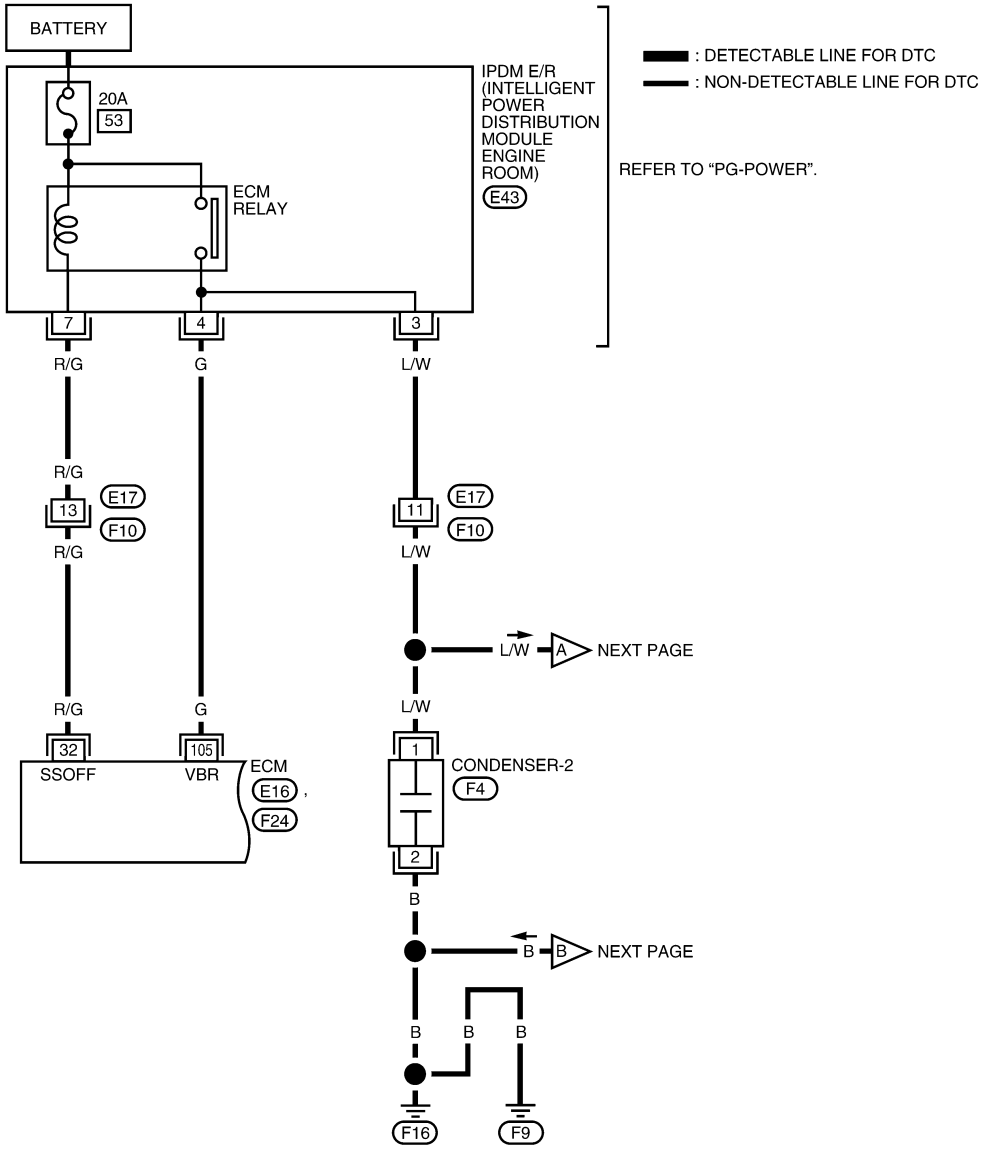

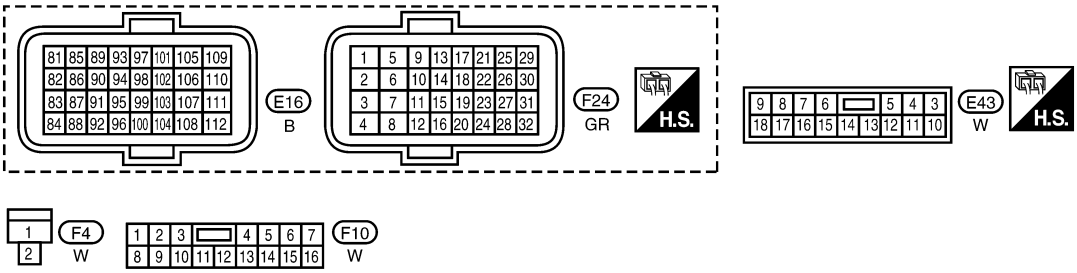

AABWA0250GB

Specification data are reference values and are measured between each terminal and ground.

CAUTION:

Do not use ECM ground terminals when measuring input/output voltage. Doing so may result in damage to the ECM's transistor. Use a ground other than ECM terminals, such as the ground.

TERMINAL NO.	WIRE COLOR	ITEM	CONDITION	DATA (DC Voltage)
32	R/G	ECM relay (Self shut-off)	**[Engine is running]** **[Ignition switch: OFF]** • For a few seconds after turning ignition switch OFF	0 - 1.0 V
			[Ignition switch: OFF] • More than a few seconds after turning ignition switch OFF	BATTERY VOLTAGE (11 - 14 V)
105	G	Power supply for ECM	**[Ignition switch: ON]**	BATTERY VOLTAGE (11 - 14 V)

EC-IGNSYS-02

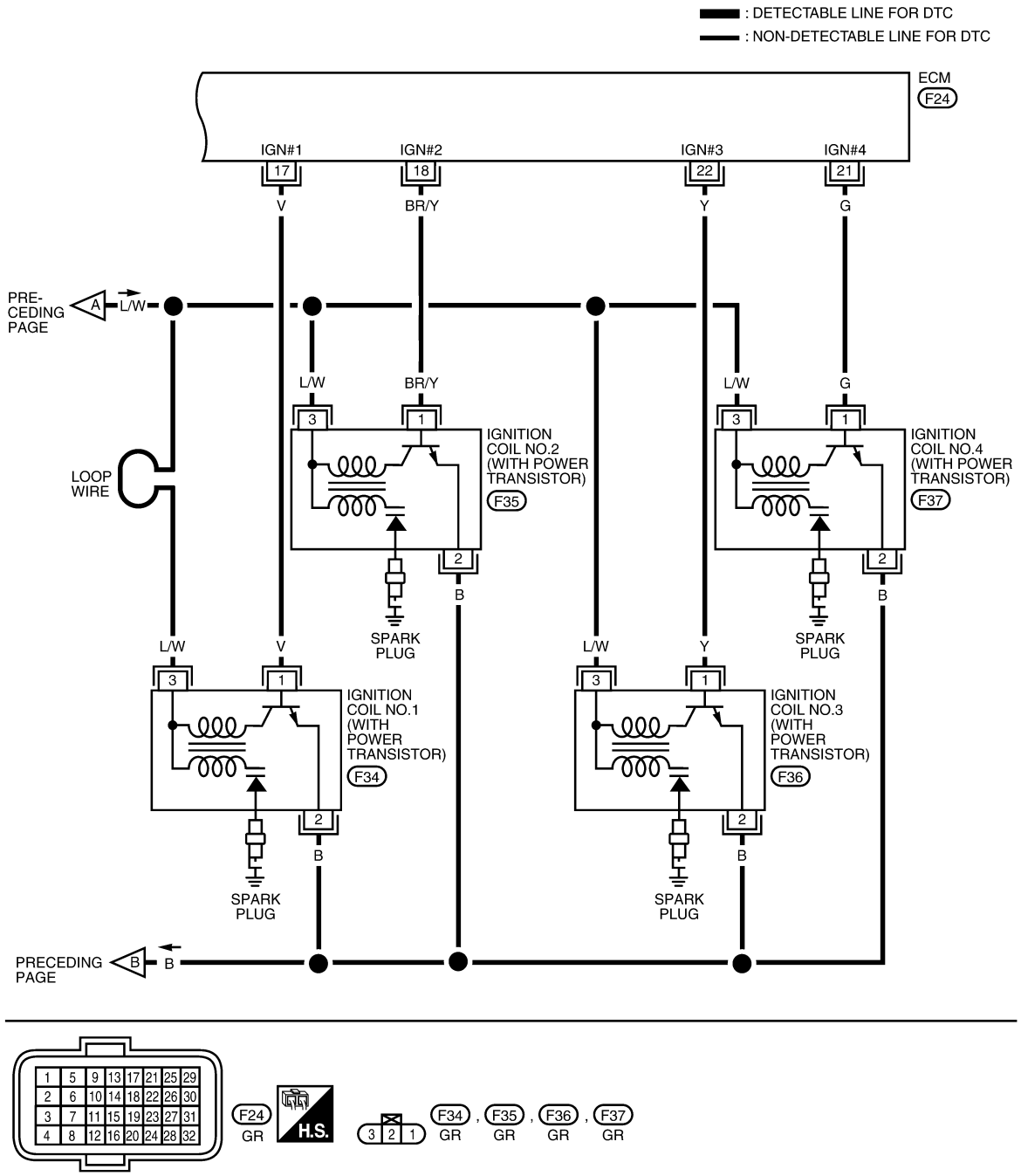

Specification data are reference values and are measured between each terminal and ground.
Pulse signal is measured by CONSULT-III.

CAUTION:

Do not use ECM ground terminals when measuring input/output voltage. Doing so may result in damage to the ECM's transistor. Use a ground other than ECM terminals, such as the ground.

TERMINAL NO.	WIRE COLOR	ITEM	CONDITION	DATA (DC Voltage)
17 18 21 22	V BR/Y G Y	Ignition signal No. 1 Ignition signal No. 2 Ignition signal No. 4 Ignition signal No. 3	**[Engine is running]** • **Warm-up condition** • Idle speed **NOTE:** The pulse cycle changes depending on rpm at idle	0 - 0.3 V★ 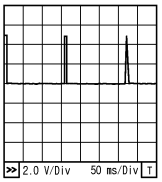 PBIA9265J
			[Engine is running] • **Warm-up condition** • Engine speed: 2,500 rpm	0.2 - 0.5 V★ 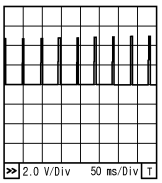 PBIA9266J

★: Average voltage for pulse signal (Actual pulse signal can be confirmed by oscilloscope.)

Diagnosis Procedure

INFOID:0000000005285674

1. CHECK ENGINE START

Turn ignition switch OFF, and restart engine.
Is engine running?

Yes or No

Yes (With CONSULT-III)>>GO TO 2.
Yes (Without CONSULT-III)>>GO TO 3.
No >> GO TO 4.

2. CHECK OVERALL FUNCTION

With CONSULT-III

1. Perform “POWER BALANCE” in “ACTIVE TEST” mode with CONSULT-III.
2. Make sure that each circuit produces a momentary engine speed drop.

OK or NG

OK >> **INSPECTION END**
NG >> GO TO 10.

3. CHECK OVERALL FUNCTION

Without CONSULT-III

1. Let engine idle.
2. Read the voltage signal between ECM terminals 17, 18, 21, 22 and ground with an oscilloscope.
3. Verify that the oscilloscope screen shows the signal wave as shown below.
   NOTE:
   The pulse cycle changes depending on rpm at idle.

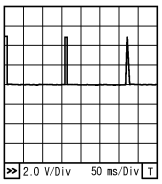

PBIA9265J

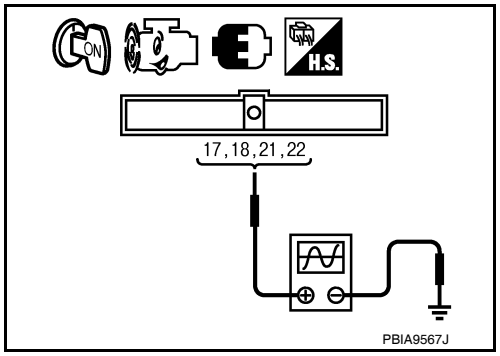

PBIA9567J

OK or NG

OK >> **INSPECTION END**
NG >> GO TO 10.

4. CHECK IGNITION COIL POWER SUPPLY CIRCUIT-I

1. Turn ignition switch OFF, wait at least 10 seconds and then turn ON.
2. Check voltage between ECM terminal 105 and ground with CONSULT-III or tester.

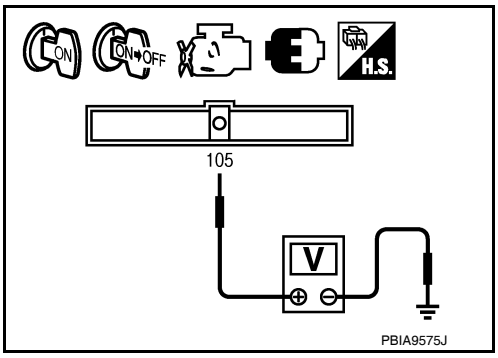

Voltage: Battery voltage

OK or NG

OK >> GO TO 5.
NG >> Go to EC-707.

5. CHECK IGNITION COIL POWER SUPPLY CIRCUIT-II

1. Turn ignition switch OFF.
2. Disconnect condenser-2 (1) harness connector.
3. Turn ignition switch ON.

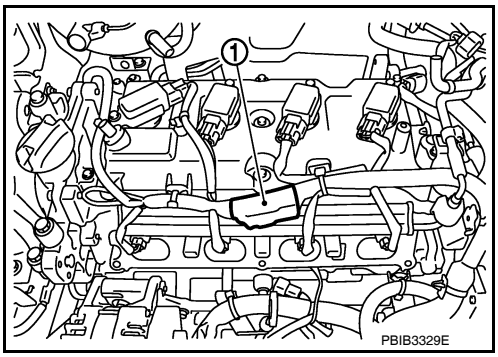

4. Check voltage between condenser-2 terminal 1 and ground with CONSULT-III or tester.

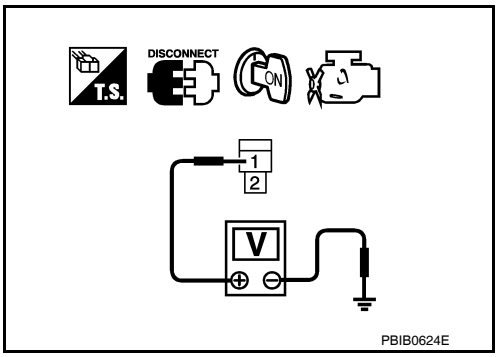

Voltage: Battery voltage

OK or NG

OK >> GO TO 8.
NG >> GO TO 6.

6. CHECK IGNITION COIL POWER SUPPLY CIRCUIT-III

1. Turn ignition switch OFF.
2. Disconnect IPDM E/R harness connector E43.
3. Check harness continuity between IPDM E/R terminal 3 and condenser-2 terminal 1. Refer to Wiring Diagram.

Continuity should exist.

4. Also check harness for short to ground and short to power.

OK or NG

OK >> Go to EC-707.
NG >> GO TO 7.

7. DETECT MALFUNCTIONING PART

Check the following.
- Harness connectors E17, F10

- Harness for open or short between IPDM E/R and condenser-2

>> Repair open circuit or short to ground or short to power in harness or connectors.

8. CHECK CONDENSER-2 GROUND CIRCUIT FOR OPEN AND SHORT

1. Turn ignition switch OFF.
2. Check harness continuity between condenser-2 terminal 2 and ground.
   Refer to Wiring Diagram.

Continuity should exist.

3. Also check harness for short to power.

OK or NG

OK >> GO TO 9.
NG >> Repair open circuit or short to power in harness or connectors.

9. CHECK CONDENSER-2

Refer to EC-1106, "Component Inspection"

OK or NG

OK >> GO TO 10.
NG >> Replace condenser-2.

10. CHECK IGNITION COIL POWER SUPPLY CIRCUIT-IV

1. Turn ignition switch OFF.
2. Reconnect all harness connectors disconnected.
3. Disconnect ignition coil (1) harness connector.
4. Turn ignition switch ON.

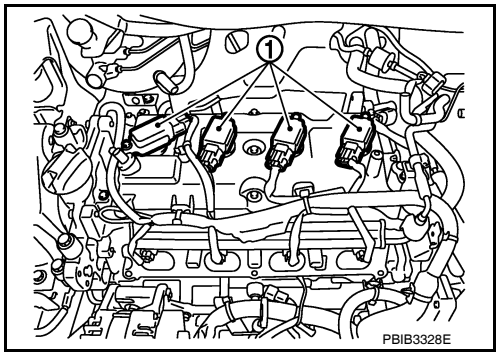

5. Check voltage between ignition coil terminal 3 and ground with CONSULT-III or tester.

Voltage: Battery voltage

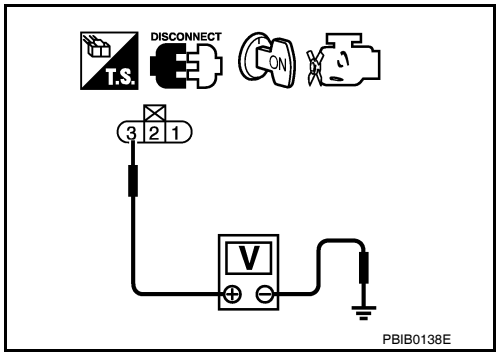

OK or NG

OK >> GO TO 12.
NG >> GO TO 11.

11. DETECT MALFUNCTIONING PART

Check the following.
- Harness connector F10
- Harness for open or short between ignition coil and harness connector F10

>> Repair or replace harness or connectors.

12. CHECK IGNITION COIL GROUND CIRCUIT FOR OPEN AND SHORT

1. Turn ignition switch OFF.

2. Check harness continuity between ignition coil terminal 2 and ground.
   Refer to Wiring Diagram.

   Continuity should exist.

3. Also check harness for short to power.

OK or NG

OK >> GO TO 13.
NG >> Repair open circuit or short to power in harness or connectors.

13. CHECK IGNITION COIL OUTPUT SIGNAL CIRCUIT FOR OPEN AND SHORT

1. Disconnect ECM harness connector.
2. Check harness continuity between ECM terminals 17, 18, 21, 22 and ignition coil terminal 1.
   Refer to Wiring Diagram.

   Continuity should exist.

3. Also check harness for short to ground and short to power.

OK or NG

OK >> GO TO 14.
NG >> Repair open circuit or short to ground or short to power in harness or connectors.

14. CHECK IGNITION COIL WITH POWER TRANSISTOR

Refer to EC-1106, "Component Inspection".

OK or NG

OK >> GO TO 15.
NG >> Replace ignition coil with power transistor.

15. CHECK INTERMITTENT INCIDENT

Refer to EC-706.

>> **INSPECTION END**

Component Inspection

INFOID:0000000005285675

IGNITION COIL WITH POWER TRANSISTOR

CAUTION:

Do the following procedure in the place where ventilation is good without the combustible.

1. Turn ignition switch OFF.
2. Disconnect ignition coil harness connector.
3. Check resistance between ignition coil terminals as follows.

Terminal No. (Polarity)	Resistance [at 25°C (77°F)]
1 and 2	Except 0 or ∞ Ω
1 and 3	Except 0 Ω
2 and 3	

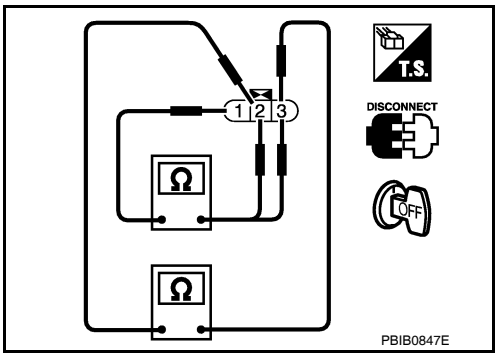

4. If NG, replace ignition coil with power transistor.
   If OK, go to next step.
5. Turn ignition switch OFF.
6. Reconnect all harness connectors disconnected.

7. Remove fuel pump fuse (1) in IPDM E/R (2) to release fuel pressure.
   NOTE:
   Do not use CONSULT-III to release fuel pressure, or fuel pressure applies again during the following procedure.
- ⇦ : Vehicle front
8. Start engine.
9. After engine stalls, crank it two or three times to release all fuel pressure.
10. Turn ignition switch OFF.
11. Remove all ignition coil harness connectors to avoid the electrical discharge from the ignition coils.

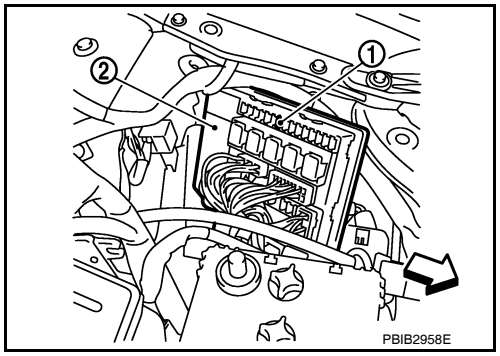

12. Remove ignition coil and spark plug of the cylinder to be checked.
13. Crank engine for 5 seconds or more to remove combustion gas in the cylinder.
14. Connect spark plug and harness connector to ignition coil.
15. Fix ignition coil using a rope etc. with gap of 13 – 17 mm (0.52 – 0.66 in) between the edge of the spark plug and grounded metal portion as shown in the figure.
16. Crank engine for about 3 seconds, and check whether spark is generated between the spark plug and the grounded metal portion.

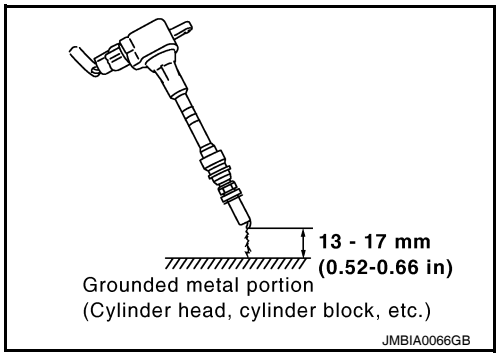

Spark should be generated.

CAUTION:
- **Do not approach to the spark plug and the ignition coil within 50 cm. Be careful not to get an electrical shock while checking, because the electrical discharge voltage becomes 20 kV or more.**
- **It might cause to damage the ignition coil if the gap of more than 17 mm (0.66 in) is taken.**

NOTE:
When the gap is less than 13 mm (0.52 in), the spark might be generated even if the coil is malfunctioning.

17. If NG, replace ignition coil with power transistor.

CONDENSER-2

1. Turn ignition switch OFF.
2. Disconnect condenser-2 harness connector.
3. Check resistance between condenser-2 terminals 1 and 2.

Resistance: Above 1 MΩ [at 25°C (77°F)]

4. If NG, replace condenser-2.

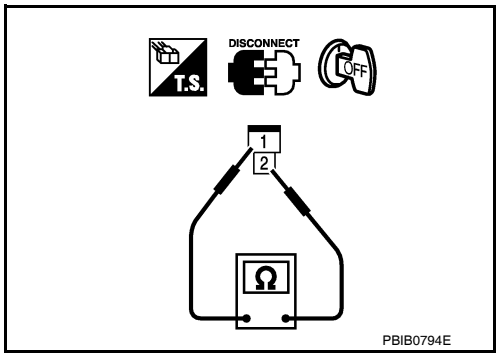

Removal and Installation

INFOID:0000000005285676

IGNITION COIL WITH POWER TRANSISTOR

Refer to EM-33.

REFRIGERANT PRESSURE SENSOR

Component Description

INFOID:0000000005285677

The refrigerant pressure sensor (1) is installed at the condenser of the air conditioner system. The sensor uses an electrostatic volume pressure transducer to convert refrigerant pressure to voltage. The voltage signal is sent to ECM, and ECM controls cooling fan system.

- ⇦: Vehicle front

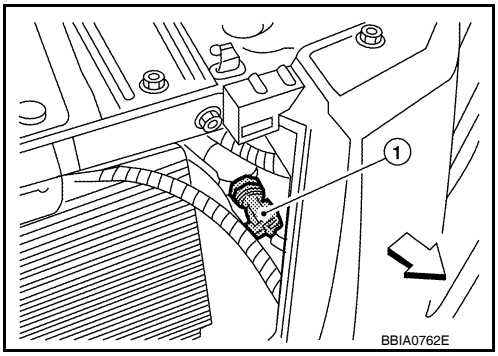

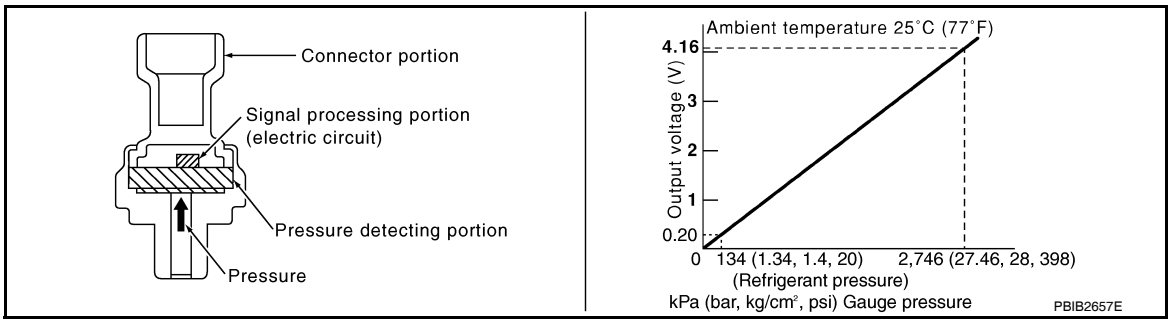

Wiring Diagram

INFOID:0000000005285678

EC-RP/SEN-01

: DETECTABLE LINE FOR DTC
: NON-DETECTABLE LINE FOR DTC

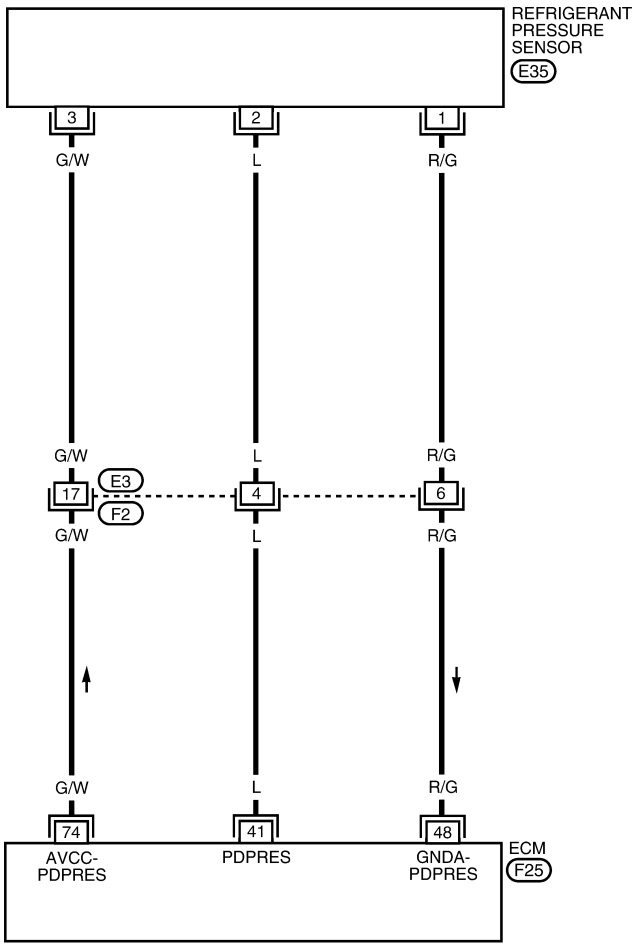

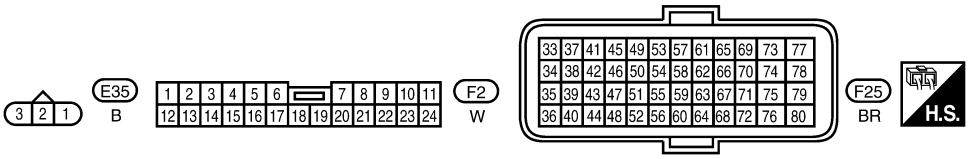

BBWA2911E

Specification data are reference values and are measured between each terminal and ground.

CAUTION:

Do not use ECM ground terminals when measuring input/output voltage. Doing so may result in damage to the ECM's transistor. Use a ground other than ECM terminals, such as the ground.

TERMINAL NO.	WIRE COLOR	ITEM	CONDITION	DATA (DC Voltage)
41	L	Refrigerant pressure sensor	**[Engine is running]** • **Warm-up condition** • Both A/C switch and blower fan switch: ON (Compressor operates)	1.0 - 4.0 V
48	R/G	Sensor ground (Refrigerant pressure sensor)	**[Engine is running]** • **Warm-up condition** • Idle speed	Approximately 0 V
74	G/W	Sensor power supply (Refrigerant pressure sensor)	**[Ignition switch: ON]**	Approximately 5 V

Diagnosis Procedure

INFOID:0000000005285679

1. CHECK REFRIGERANT PRESSURE SENSOR OVERALL FUNCTION

1. Start engine and warm it up to normal operating temperature.
2. Turn A/C switch and blower fan switch ON.
3. Check voltage between ECM terminal 41 and ground with CONSULT-III or tester.

Voltage: 1.0 - 4.0 V

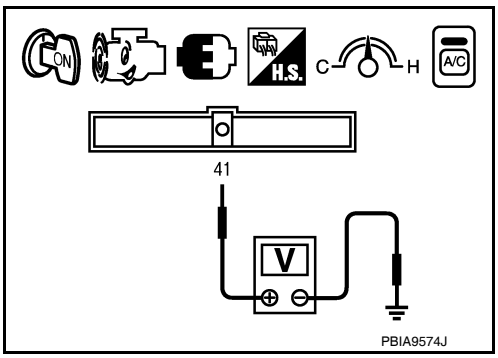

OK or NG

OK >> **INSPECTION END**
NG >> GO TO 2.

2. CHECK GROUND CONNECTIONS

1. Turn A/C switch and blower fan switch OFF.
2. Stop engine and turn ignition switch OFF.
3. Loosen and retighten ground screws on the body. Refer to EC-711, "Ground Inspection".

- ⇦ : Vehicle front
- Body ground (1)

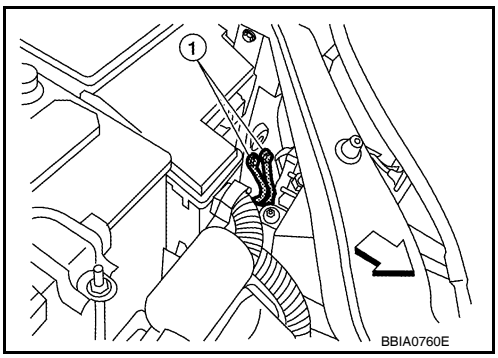

OK or NG

OK >> GO TO 3.
NG >> Repair or replace ground connections.

3. CHECK REFRIGERANT PRESSURE SENSOR POWER SUPPLY CIRCUIT

1. Disconnect refrigerant pressure sensor (1) harness connector.

- ⇦: Vehicle front

2. Turn ignition switch ON.

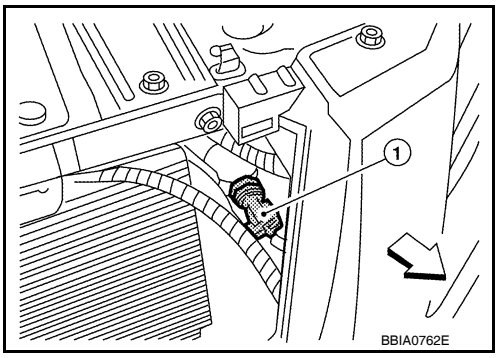

3. Check voltage between refrigerant pressure sensor terminal 3 and ground with CONSULT-III or tester.

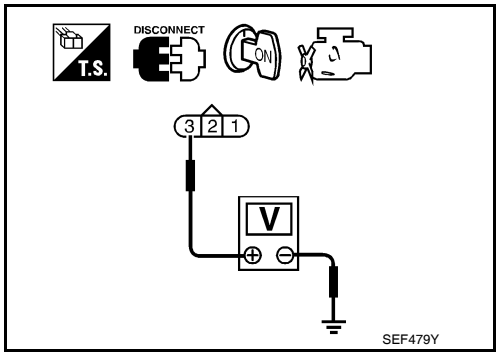

Voltage: Approximately 5 V

OK or NG

OK >> GO TO 5.
NG >> GO TO 4.

4. DETECT MALFUNCTIONING PART

Check the following.
- Harness connectors E3, F2
- Harness for open or short between refrigerant pressure sensor and ECM

>> Repair open circuit or short to ground or short to power in harness or connectors.

5. CHECK REFRIGERANT PRESSURE SENSOR GROUND CIRCUIT FOR OPEN AND SHORT

1. Turn ignition switch OFF.
2. Disconnect ECM harness connector.
3. Check harness continuity between refrigerant pressure sensor terminal 1 and ECM terminal 48. Refer to Wiring Diagram.

Continuity should exist.

4. Also check harness for short to ground and short to power.

OK or NG

OK >> GO TO 7.
NG >> GO TO 6.

6. DETECT MALFUNCTIONING PART

Check the following.
- Harness connectors E3, F2
- Harness for open or short between refrigerant pressure sensor and ECM

>> Repair open circuit or short to ground or short to power in harness or connectors.

7. CHECK REFRIGERANT PRESSURE SENSOR INPUT SIGNAL CIRCUIT FOR OPEN AND SHORT

1. Check harness continuity between refrigerant pressure sensor terminal 2 and ECM terminal 41. Refer to Wiring Diagram.

Continuity should exist.

2. Also check harness for short to ground and short to power.

OK or NG

OK >> GO TO 9.
NG >> GO TO 8.

8. DETECT MALFUNCTIONING PART

Check the following.
- Harness connectors E3, F2
- Harness for open or short between refrigerant pressure sensor and ECM

>> Repair open circuit or short to ground or short to power in harness or connectors.

9. CHECK INTERMITTENT INCIDENT

Refer to EC-706.

OK or NG

OK >> Replace refrigerant pressure sensor.
NG >> Repair or replace.

Removal and Installation

INFOID:0000000005285680

REFRIGERANT PRESSURE SENSOR

Refer to MTC-88, "Removal and Installation for Refrigerant Pressure Sensor".

MIL AND DATA LINK CONNECTOR

Wiring Diagram

INFOID:0000000005285681

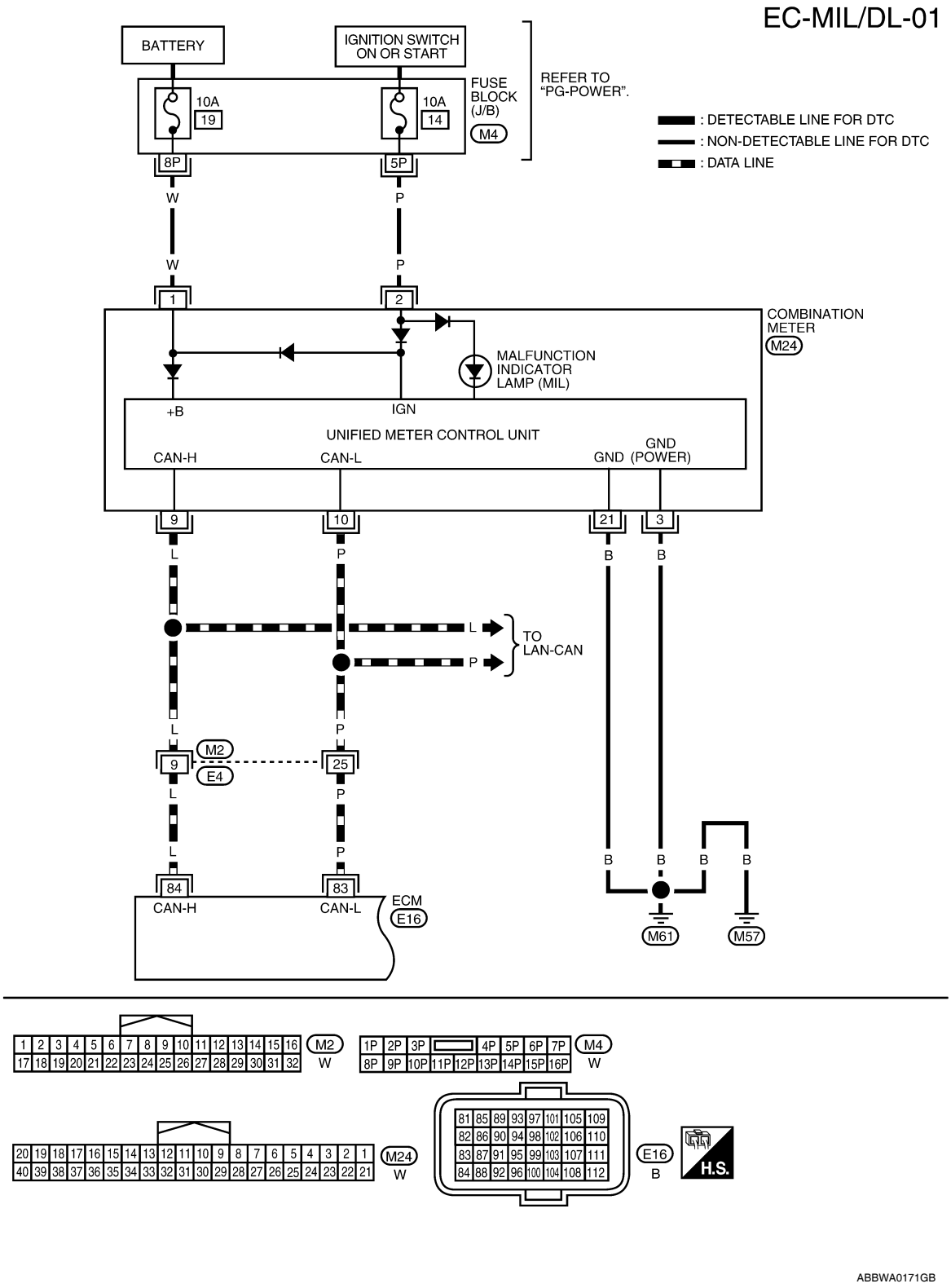

ABBWA0171GB

EC-MIL/DL-02

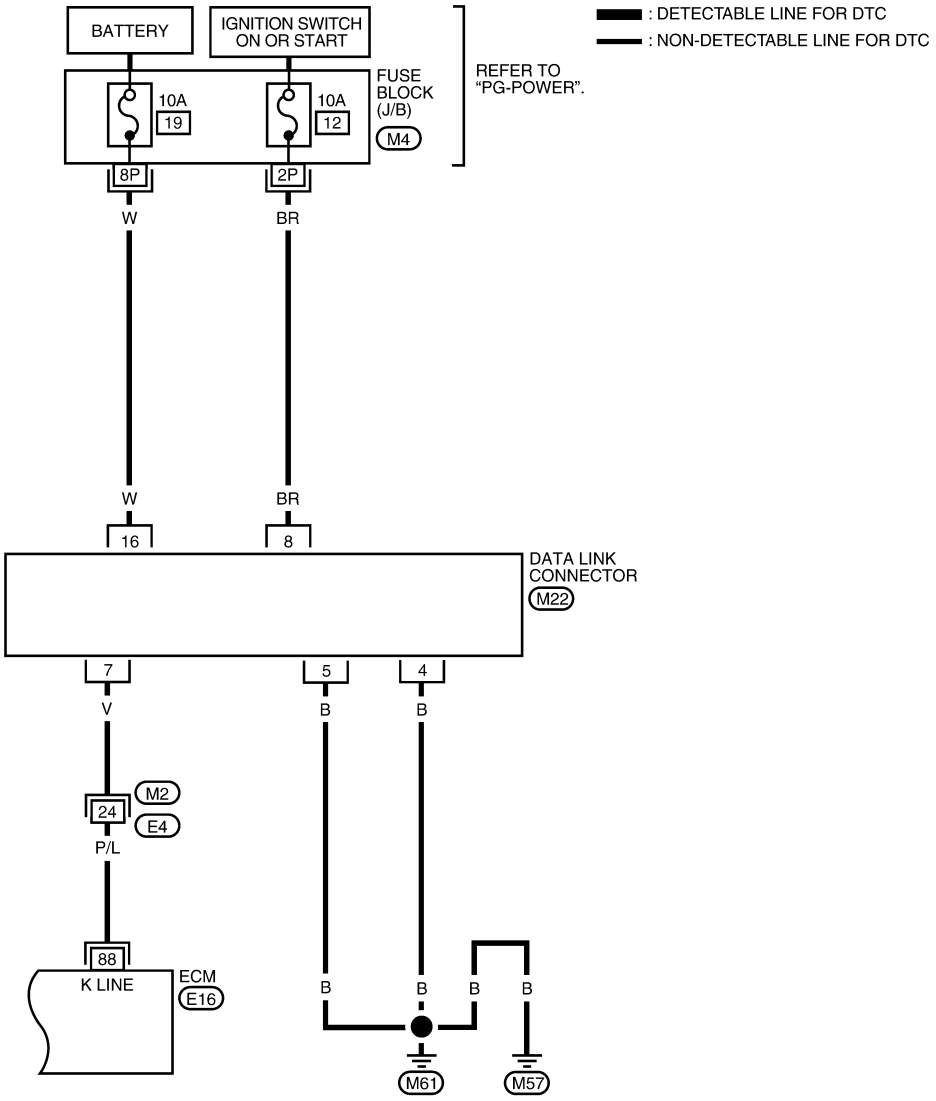

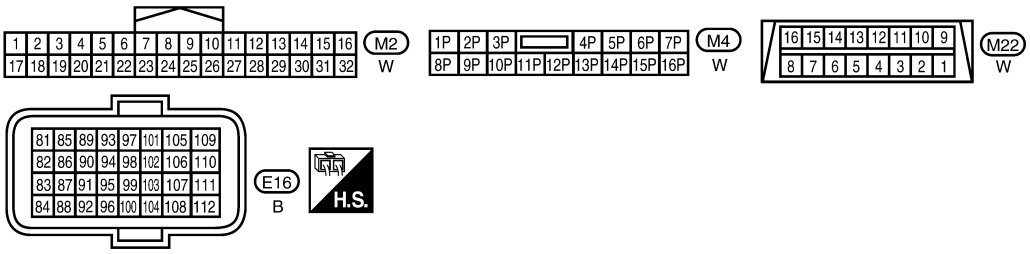

BBWA2913E

SERVICE DATA AND SPECIFICATIONS (SDS)

Fuel Pressure

INFOID:0000000005285682

Fuel pressure at idle	Approximately 350 kPa (3.57 kg/cm^2, 51 psi)

Idle Speed and Ignition Timing

INFOID:0000000005285683

Target idle speed	CVT	No load*1 (In P or N position)	700 ± 50 rpm
	M/T	No load*1 (in Neutral position)	675 ± 50 rpm
Air conditioner: ON	CVT	In P or N position	800 rpm or more
	M/T	In Neutral position	
Ignition timing	CVT	In P or N position	6 ± 5° BTDC
	M/T	In Neutral position	

*1: Under the following conditions:

- Air conditioner switch: OFF
- Electric load: OFF (Lights, heater fan & rear window defogger)
- Steering wheel: Kept in straight-ahead position

Calculated Load Value

INFOID:0000000005285684

	Calculated load value (Using CONSULT-III or GST)
At idle	10 - 35 %
At 2,500 rpm	10 - 35 %

Mass Air Flow Sensor

INFOID:0000000005285685

Supply voltage	Battery voltage (11 - 14 V)
Output voltage at idle	0.9 - 1.2* V
Mass air flow (Using CONSULT-III or GST)	1.0 - 4.0 g·m/sec at idle* 2.0 - 10.0 g·m/sec at 2,500 rpm*

*: Engine is warmed up to normal operating temperature and running under no load.

Intake Air Temperature Sensor

INFOID:0000000005285686

Temperature [°C (°F)]	Resistance (kΩ)
25 (77)	1.800 - 2.200

Engine Coolant Temperature Sensor

INFOID:0000000005285687

Temperature [°C (°F)]	Resistance (kΩ)
20 (68)	2.1 - 2.9
50 (122)	0.68 - 1.00
90 (194)	0.236 - 0.260

Air Fuel Ratio (A/F) Sensor 1 Heater

INFOID:0000000005285688

Resistance [at 25°C (77°F)]	1.8 - 2.44 Ω

Heated Oxygen sensor 2 Heater

INFOID:0000000005285689

Resistance [at 25°C (77°F)]	3.4 - 4.4 Ω

Crankshaft Position Sensor (POS)

INFOID:0000000005285690

Refer to EC-875, "Component Inspection".

Camshaft Position Sensor (PHASE)

INFOID:0000000005285691

Refer to EC-880, "Component Inspection".

Throttle Control Motor

INFOID:0000000005285692

Resistance [at 25°C (77°F)]	Approximately 1 - 15 Ω

Fuel Injector

INFOID:0000000005285693

Resistance [at 10 - 60°C (50 - 140°F)]	11.1 - 14.5 Ω

Fuel Pump

INFOID:0000000005285694

Resistance [at 25°C (77°F)]	Approximately 0.2 - 5.0 Ω

SERVICE INFORMATION

INDEX FOR DTC

U0101-U1001

INFOID:0000000005285695

DTC*1		Items (CONSULT-III screen terms)	Reference page
CONSULT-III GST*2	ECM*3		
U0101	0101*4	LOST COMM (TCM)	EC-1252
U0140	0140*4	LOST COMM (BCM)	EC-1254
U1001	1001*4	CAN COMM CIRCUIT	EC-1256

*1: 1st trip DTC No. is the same as DTC No.
*2: This number is prescribed by SAE J2012/ISO 15031-6.
*3: In Diagnostic Test Mode II (Self-diagnostic results), this number is controlled by NISSAN.
*4: The troubleshooting for this DTC needs CONSULT-III.

P0011-P0075

INFOID:0000000005285696

DTC*1		Items (CONSULT-III screen terms)	Reference page
CONSULT-III GST*2	ECM*3		
P0011	0011	INT/V TIM CONT-B1	EC-1258
P0031	0031	A/F SEN1 HTR (B1)	EC-1262
P0032	0032	A/F SEN1 HTR (B1)	EC-1262
P0037	0037	HO2S2 HTR (B1)	EC-1269
P0038	0038	HO2S2 HTR (B1)	EC-1269
P0051	0051	A/F SEN1 HTR (B2)	EC-1262
P0052	0052	A/F SEN1 HTR (B2)	EC-1262
P0057	0057	HO2S2 HTR (B2)	EC-1269
P0058	0058	HO2S2 HTR (B2)	EC-1269
P0075	0075	INT/V TIM V/CIR-B1	EC-1277

*1: 1st trip DTC No. is the same as DTC No.
*2: This number is prescribed by SAE J2012/ISO 15031-6.
*3: In Diagnostic Test Mode II (Self-diagnostic results), this number is controlled by NISSAN.

P0101-P0128

INFOID:0000000005285697

DTC*1		Items (CONSULT-III screen terms)	Reference page
CONSULT-III GST*2	ECM*3		
P0101	0101	MAF SEN/CIRCUIT-B1	EC-1282
P0102	0102	MAF SEN/CIRCUIT-B1	EC-1289
P0103	0103	MAF SEN/CIRCUIT-B1	EC-1289
P0112	0112	IAT SEN/CIRCUIT-B1	EC-1296
P0113	0113	IAT SEN/CIRCUIT-B1	EC-1296
P0116	0116	ECT SEN/CIRC	EC-1300
P0117	0117	ECT SEN/CIRC	EC-1303

DTC*1		Items (CONSULT-III screen terms)	Reference page
CONSULT-III GST*2	ECM*3		
P0118	0118	ECT SEN/CIRC	EC-1303
P0122	0122	TP SEN 2/CIRC-B1	EC-1308
P0123	0123	TP SEN 2/CIRC-B1	EC-1308
P0125	0125	ECT SENSOR	EC-1313
P0127	0127	IAT SENSOR-B1	EC-1316
P0128	0128	THERMSTAT FNCTN	EC-1319

*1: 1st trip DTC No. is the same as DTC No.
*2: This number is prescribed by SAE J2012/ISO 15031-6.
*3: In Diagnostic Test Mode II (Self-diagnostic results), this number is controlled by NISSAN.

P0130-P0159

INFOID:0000000005285698

DTC*1		Items (CONSULT-III screen terms)	Reference page
CONSULT-III GST*2	ECM*3		
P0130	0130	A/F SENSOR1 (B1)	EC-1321
P0131	0131	A/F SENSOR1 (B1)	EC-1329
P0132	0132	A/F SENSOR1 (B1)	EC-1337
P0133	0133	A/F SENSOR1 (B1)	EC-1345
P0137	0137	HO2S2 (B1)	EC-1354
P0138	0138	HO2S2 (B1)	EC-1363
P0139	0139	HO2S2 (B1)	EC-1375
P0150	0150	A/F SENSOR1 (B2)	EC-1321
P0151	0151	A/F SENSOR1 (B2)	EC-1329
P0152	0152	A/F SENSOR1 (B2)	EC-1337
P0153	0153	A/F SENSOR1 (B2)	EC-1345
P0157	0157	HO2S2 (B2)	EC-1354
P0158	0158	HO2S2 (B2)	EC-1363
P0159	0159	HO2S2 (B2)	EC-1375

*1: 1st trip DTC No. is the same as DTC No.
*2: This number is prescribed by SAE J2012/ISO 15031-6.
*3: In Diagnostic Test Mode II (Self-diagnostic results), this number is controlled by NISSAN.

P0171-P0223

INFOID:0000000005285699

DTC*1		Items (CONSULT-III screen terms)	Reference page
CONSULT-III GST*2	ECM*3		
P0171	0171	FUEL SYS-LEAN-B1	EC-1385
P0172	0172	FUEL SYS-RICH-B1	EC-1394
P0174	0174	FUEL SYS-LEAN-B2	EC-1385
P0175	0175	FUEL SYS-RICH-B2	EC-1394
P0181	0181	FTT SENSOR	EC-1402
P0182	0182	FTT SEN/CIRCUIT	EC-1406

DTC*1		Items (CONSULT-III screen terms)	Reference page
CONSULT-III GST*2	ECM*3		
P0183	0183	FTT SEN/CIRCUIT	EC-1406
P0222	0222	TP SEN 1/CIRC-B1	EC-1410
P0223	0223	TP SEN 1/CIRC-B1	EC-1410

*1: 1st trip DTC No. is the same as DTC No.
*2: This number is prescribed by SAE J2012/ISO 15031-6.
*3: In Diagnostic Test Mode II (Self-diagnostic results), this number is controlled by NISSAN.

P0300-P0430

INFOID:0000000005285700

DTC*1		Items (CONSULT-III screen terms)	Reference page
CONSULT-III GST*2	ECM*3		
P0300	0300	MULTI CYL MISFIRE	EC-1415
P0301	0301	CYL 1 MISFIRE	EC-1415
P0302	0302	CYL 2 MISFIRE	EC-1415
P0303	0303	CYL 3 MISFIRE	EC-1415
P0304	0304	CYL 4 MISFIRE	EC-1415
P0327	0327	KNOCK SEN/CIRC-B1	EC-1421
P0328	0328	KNOCK SEN/CIRC-B1	EC-1421
P0335	0335	CKP SEN/CIRCUIT	EC-1425
P0340	0340	CMP SEN/CIRC-B1	EC-1431
P0420	0420	TW CATALYST SYS-B1	EC-1437
P0430	0430	TW CATALYST SYS-B2	EC-1437

*1: 1st trip DTC No. is the same as DTC No.
*2: This number is prescribed by SAE J2012/ISO 15031-6.
*3: In Diagnostic Test Mode II (Self-diagnostic results), this number is controlled by NISSAN.

P0441-P0463

INFOID:0000000005285701

DTC*1		Items (CONSULT-III screen terms)	Reference page
CONSULT-III GST*2	ECM*3		
P0441	0441	EVAP PURG FLOW/MON	EC-1442
P0442	0442	EVAP SMALL LEAK	EC-1447
P0443	0443	PURG VOLUME CONT/V	EC-1454
P0444	0444	PURG VOLUME CONT/V	EC-1462
P0445	0445	PURG VOLUME CONT/V	EC-1462
P0447	0447	VENT CONTROL VALVE	EC-1468
P0448	0448	VENT CONTROL VALVE	EC-1473
P0451	0451	EVAP SYS PRES SEN	EC-1479
P0452	0452	EVAP SYS PRES SEN	EC-1482
P0453	0453	EVAP SYS PRES SEN	EC-1489
P0455	0455	EVAP GROSS LEAK	EC-1497
P0456	0456	EVAP VERY SML LEAK	EC-1504

DTC*1		Items (CONSULT-III screen terms)	Reference page
CONSULT-III GST*2	ECM*3		
P0460	0460	FUEL LEV SEN SLOSH	EC-1512
P0461	0461	FUEL LEVEL SENSOR	EC-1514
P0462	0462	FUEL LEVL SEN/CIRC	EC-1516
P0463	0463	FUEL LEVL SEN/CIRC	EC-1516

*1: 1st trip DTC No. is the same as DTC No.
*2: This number is prescribed by SAE J2012/ISO 15031-6.
*3: In Diagnostic Test Mode II (Self-diagnostic results), this number is controlled by NISSAN.

P0500-P0643

INFOID:0000000005285702

DTC*1		Items (CONSULT-III screen terms)	Reference page
CONSULT-III GST*2	ECM*3		
P0500	0500	VEH SPEED SEN/CIRC	EC-1518
P0506	0506	ISC SYSTEM	EC-1520
P0507	0507	ISC SYSTEM	EC-1522
P0603	0603	ECM BACK UP/CIRCUIT	EC-1524
P0605	0605	ECM	EC-1527
P0607	0607	ECM	EC-1529
P0643	0643	SENSOR POWER/CIRC	EC-1530

*1: 1st trip DTC No. is the same as DTC No.
*2: This number is prescribed by SAE J2012/ISO 15031-6.
*3: In Diagnostic Test Mode II (Self-diagnostic results), this number is controlled by NISSAN.

P0705-P0850

INFOID:0000000005285703

DTC*1		Items (CONSULT-III screen terms)	Reference page
CONSULT-III GST*2	ECM*3		
P0705	0705	T/M RANGE SENSOR A	CVT-60
P0710	0710	FLUID TEMP SENSOR A	CVT-65
P0715	0715	INPUT SPEED SENSOR A	CVT-70
P0720	0720	OUTPUT SPEED SENSOR	CVT-75
P0740	0740	TORQUE CONVERTER	CVT-83
P0744	0744	TORQUE CONVERTER	CVT-88
P0745	0745	PC SOLENOID A	CVT-90
P0746	0746	PC SOLENOID A	CVT-95
P0776	0776	PC SOLENOID B	CVT-97
P0778	0778	PC SOLENOID B	CVT-99
P0840	0840	FLUID PRESS SEN/SW A	CVT-109
P0850	0850	P-N POS SW/CIRCUIT	EC-1535

*1: 1st trip DTC No. is the same as DTC No.
*2: This number is prescribed by SAE J2012/ISO 15031-6.
*3: In Diagnostic Test Mode II (Self-diagnostic results), this number is controlled by NISSAN.

P1148-P1574

INFOID:0000000005285704

DTC*1		Items (CONSULT-III screen terms)	Reference page
CONSULT-III GST*2	ECM*3		
P1148	1148	CLOSED LOOP-B1	EC-1541
P1168	1168	CLOSED LOOP-B2	EC-1541
P1212	1212	TCS/CIRC	EC-1542
P1217	1217	ENG OVER TEMP	EC-1543
P1225	1225	CTP LEARNING-B1	EC-1555
P1226	1226	CTP LEARNING-B1	EC-1557
P1421	1421	COLD START CONTROL	EC-1559
P1564	1564	ASCD SW	EC-1561
P1572	1572	ASCD BRAKE SW	EC-1567
P1574	1574	ASCD VHL SPD SEN	EC-1576

*1: 1st trip DTC No. is the same as DTC No.
*2: This number is prescribed by SAE J2012/ISO 15031-6.
*3: In Diagnostic Test Mode II (Self-diagnostic results), this number is controlled by NISSAN.

P1610-P1615

INFOID:0000000005285705

DTC*1		Items (CONSULT-III screen terms)	Reference page
CONSULT-III GST*2	ECM*3		
P1610	1610	LOCK MODE	BL-170
P1611	1611	ID DISCORD, IMM-ECM	
P1612	1612	CHAIN OF ECM-IMMU	
P1614	1614	CHAIN OF IMMU-KEY	
P1615	1615	DIFFERENCE OF KEY	

*1: 1st trip DTC No. is the same as DTC No.
*2: This number is prescribed by SAE J2012/ISO 15031-6.
*3: In Diagnostic Test Mode II (Self-diagnostic results), this number is controlled by NISSAN.

P1715-P1805

INFOID:0000000005285706

DTC*1		Items (CONSULT-III screen terms)	Reference page
CONSULT-III GST*2	ECM*3		
P1715	1715	IN PULY SPEED	EC-1578
P1740	1740	SLCT SOLENOID	CVT-128
P1777	1777	STEP MOTOR	CVT-134
P1778	1778	STEP MOTOR	CVT-138
P1805	1805	BRAKE SW/CIRCUIT	EC-1580

*1: 1st trip DTC No. is the same as DTC No.
*2: This number is prescribed by SAE J2012/ISO 15031-6.
*3: In Diagnostic Test Mode II (Self-diagnostic results), this number is controlled by NISSAN.

P2100-P2A03

INFOID:0000000005285707

DTC*1		Items (CONSULT-III screen terms)	Reference page
CONSULT-III GST*2	ECM*3		
P2100	2100	ETC MOT PWR-B1	EC-1584
P2101	2101	ETC FUNCTION/CIRC-B1	EC-1588
P2103	2103	ETC MOT PWR	EC-1584
P2118	2118	ETC MOT-B1	EC-1594
P2119	2119	ETC ACTR-B1	EC-1599
P2122	2122	APP SEN 1/CIRC	EC-1601
P2123	2123	APP SEN 1/CIRC	EC-1601
P2127	2127	APP SEN 2/CIRC	EC-1606
P2128	2128	APP SEN 2/CIRC	EC-1606
P2135	2135	TP SENSOR-B1	EC-1613
P2138	2138	APP SENSOR	EC-1618
P2A00	2A00	A/F SENSOR1 (B1)	EC-1625
P2A03	2A03	A/F SENSOR1 (B2)	EC-1625

*1: 1st trip DTC No. is the same as DTC No.

*2: This number is prescribed by SAE J2012/ISO 15031-6.

*3: In Diagnostic Test Mode II (Self-diagnostic results), this number is controlled by NISSAN.

PRECAUTIONS

Precaution for Supplemental Restraint System (SRS) "AIR BAG" and "SEAT BELT PRE-TENSIONER"

INFOID:0000000005937457

The Supplemental Restraint System such as “AIR BAG” and “SEAT BELT PRE-TENSIONER”, used along with a front seat belt, helps to reduce the risk or severity of injury to the driver and front passenger for certain types of collision. This system includes seat belt switch inputs and dual stage front air bag modules. The SRS system uses the seat belt switches to determine the front air bag deployment, and may only deploy one front air bag, depending on the severity of a collision and whether the front occupants are belted or unbelted.
Information necessary to service the system safely is included in the SRS and SB section of this Service Manual.

WARNING:

- **To avoid rendering the SRS inoperative, which could increase the risk of personal injury or death in the event of a collision which would result in air bag inflation, all maintenance must be performed by an authorized NISSAN/INFINITI dealer.**
- **Improper maintenance, including incorrect removal and installation of the SRS, can lead to personal injury caused by unintentional activation of the system. For removal of Spiral Cable and Air Bag Module, see the SRS section.**
- **Do not use electrical test equipment on any circuit related to the SRS unless instructed to in this Service Manual. SRS wiring harnesses can be identified by yellow and/or orange harnesses or harness connectors.**

PRECAUTIONS WHEN USING POWER TOOLS (AIR OR ELECTRIC) AND HAMMERS

WARNING:

- **When working near the Airbag Diagnosis Sensor Unit or other Airbag System sensors with the Ignition ON or engine running, DO NOT use air or electric power tools or strike near the sensor(s) with a hammer. Heavy vibration could activate the sensor(s) and deploy the air bag(s), possibly causing serious injury.**
- **When using air or electric power tools or hammers, always switch the Ignition OFF, disconnect the battery, and wait at least 3 minutes before performing any service.**

Precaution for Procedure without Cowl Top Cover

INFOID:0000000005285709

When performing the procedure after removing cowl top cover, cover the lower end of windshield with urethane, etc.

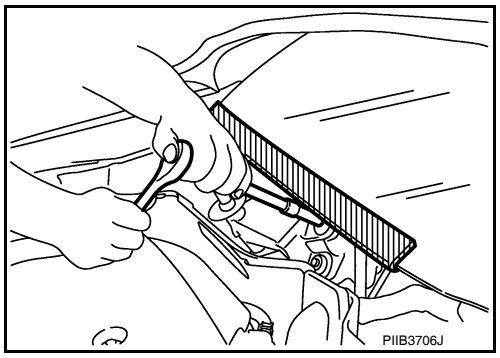

On Board Diagnosis (OBD) System of Engine and CVT

INFOID:0000000005285710

The ECM has an on board diagnostic system. It will illuminate the malfunction indicator lamp (MIL) to warn the driver of a malfunction causing emission deterioration.

CAUTION:

- **Always turn the ignition switch OFF and disconnect the battery ground cable before any repair or inspection work. The open/short circuit of related switches, sensors, solenoid valves, etc. will cause the MIL to illuminate.**
- **Always connect and lock the connectors securely after work. A loose (unlocked) connector will cause the MIL to illuminate due to the open circuit. (Be sure the connector is free from water, grease, dirt, bent terminals, etc.)**
- **Certain systems and components, especially those related to OBD, may use a new style slide-locking type harness connector. For description and how to disconnect, refer to PG-59.**
- **Always route and secure the harnesses properly after work. The interference of the harness with a bracket, etc. may cause the MIL to illuminate due to the short circuit.**

- **Always connect rubber tubes properly after work. A misconnected or disconnected rubber tube may cause the MIL to illuminate due to the malfunction of the EVAP system or fuel injection system, etc.**
- **Always erase the unnecessary malfunction information (repairs completed) from the ECM and TCM (Transmission control module) before returning the vehicle to the customer.**

Precaution

INFOID:0000000005285711

- **Always use a 12 volt battery as power source.**
- **Never attempt to disconnect battery cables while engine is running.**
- **Before connecting or disconnecting the ECM harness connector, turn ignition switch OFF and disconnect negative battery cable. Failure to do so may damage the ECM because battery voltage is applied to ECM even if ignition switch is turned OFF.**
- **Before removing parts, turn ignition switch OFF and then disconnect negative battery cable.**

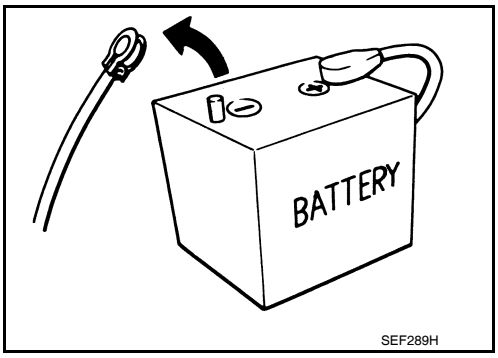

SEF289H

- **Never disassemble ECM.**
- **If battery cable is disconnected, the memory will return to the initial ECM values.**
  The ECM will now start to self-control at its initial values. Engine operation can vary slightly when the cable is disconnected. However, this is not an indication of a malfunction. Never replace parts because of a slight variation.
- **If the battery is disconnected, the following emission-related diagnostic information will be lost within 24 hours.**
- **Diagnostic trouble codes**
- **1st trip diagnostic trouble codes**
- **Freeze frame data**
- **1st trip freeze frame data**
- **System readiness test (SRT) codes**
- **Test values**

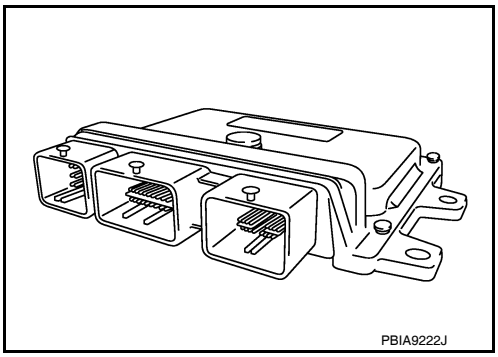
PBIA9222J

- **When connecting ECM harness connector, fasten (B) it securely with a lever (1) as far as it will go as shown in the figure.**
- **ECM (2)**
- **Loosen (A)**

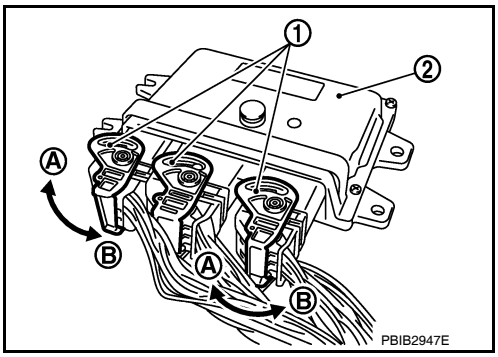

PBIB2947E

- **When connecting or disconnecting pin connectors into or from ECM, never damage pin terminals (bends or break).**
  Check that there are not any bends or breaks on ECM pin terminal, when connecting pin connectors.
- **Securely connect ECM harness connectors.**
  A poor connection can cause an extremely high (surge) voltage to develop in coil and condenser, thus resulting in damage to ICs.
- **Keep engine control system harness at least 10 cm (4 in) away from adjacent harness, to prevent engine control system malfunctions due to receiving external noise, degraded operation of ICs, etc.**
- **Keep engine control system parts and harness dry.**

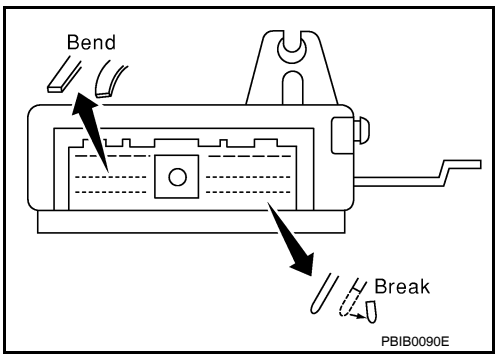

PBIB0090E

- **Before replacing ECM, perform "ECM Terminals and Reference Value" inspection and check that ECM functions properly. Refer to EC-1217, "ECM Terminal and Reference Value".**
- **Handle mass air flow sensor carefully to avoid damage.**
- **Never disassemble mass air flow sensor.**
- **Never clean mass air flow sensor with any type of detergent.**
- **Never disassemble electric throttle control actuator.**
- **Even a slight leak in the air intake system can cause serious incidents.**
- **Never shock or jar the camshaft position sensor (PHASE), crankshaft position sensor (POS).**
- **After performing each TROUBLE DIAGNOSIS, perform DTC Confirmation Procedure or Overall Function Check.**
  The DTC should not be displayed in the DTC Confirmation Procedure if the repair is completed. The Overall Function Check should be a good result if the repair is completed.

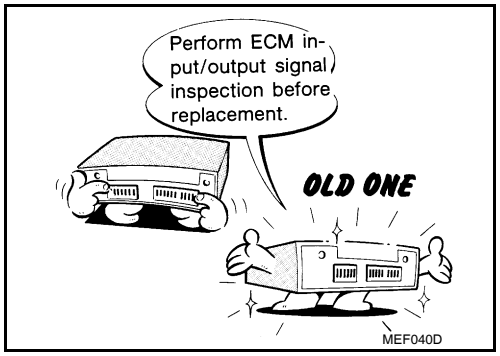

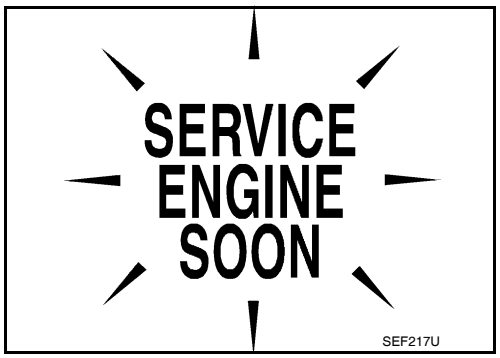

- **When measuring ECM signals with a circuit tester, never allow the two tester probes to contact.**
  Accidental contact of probes will cause a short circuit and damage the ECM power transistor.

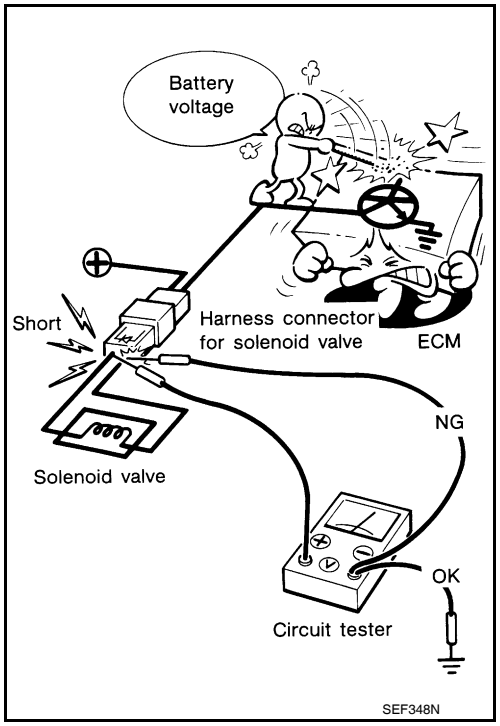

- **B1 indicates bank 1 (cylinders number 1 and 4), B2 indicates bank 2 (cylinders number 2 and 3).**

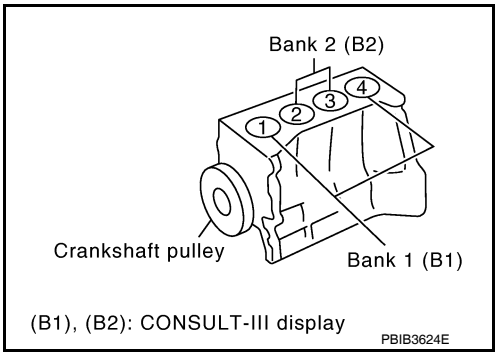

- **Never operate fuel pump when there is no fuel in lines.**
- **Fuel level sensor unit and fuel pump (1)**
- **Fuel pressure regulator (2)**
- **Fuel level sensor (3)**
- **Fuel tank temperature sensor (4)**
- **Tighten fuel hose clamps to the specified torque.**

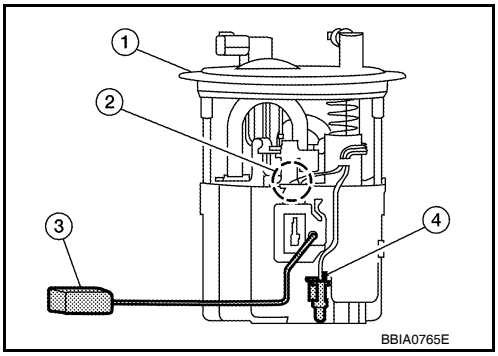

- **Never depress accelerator pedal when starting.**
- **Immediately after starting, never rev up engine unnecessarily.**
- **Never rev up engine just prior to shutdown.**

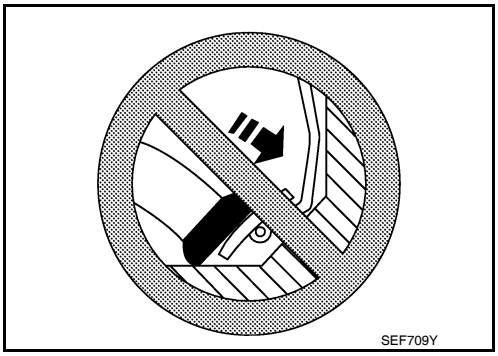

- **When installing C.B. ham radio or a mobile phone, always observe the following as it may adversely affect electronic control systems depending on installation location.**
  - **Keep the antenna as far as possible from the electronic control units.**
  - **Keep the antenna feeder line more than 20 cm (8 in) away from the harness of electronic controls.**
    Never let them run parallel for a long distance.
  - **Adjust the antenna and feeder line so that the standing-wave radio can be kept smaller.**
  - **Always ground the radio to vehicle body.**

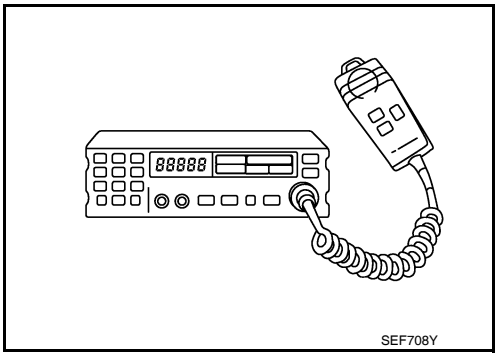

PREPARATION

Special Service Tool

INFOID:0000000005285712

The actual shapes of Kent-Moore tools may differ from those of special service tools illustrated here.

Tool number (Kent-Moore No.) Tool name	Description
(J-44321) Fuel pressure gauge Kit 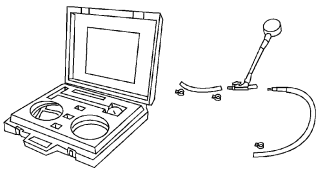 LEC642	Checks fuel pressure
(J-44321-6) Fuel pressure adapter 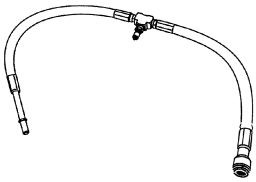 LBIA0376E	Connects fuel pressure gauge to quick connector type fuel lines.
(J-45488) Quick connector release 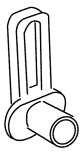 PBIC0198E	Removes fuel tube quick connectors in engine room.

Commercial Service Tool

INFOID:0000000005285713

Tool number (Kent-Moore No.) Tool name	Description
Leak detector i.e.: (J-41416) 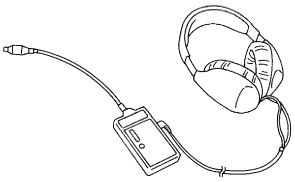 S-NT703	Locats the EVAP leak
EVAP service port adapter i.e.: (J-41413-OBD) 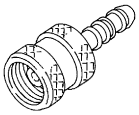 S-NT704	Applys positive pressure through EVAP service port

Tool number (Kent-Moore No.) Tool name	Description
Fuel filler cap adapter i.e.: (MLR-8382) 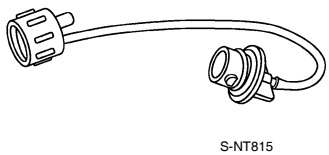 S-NT815	Checks fuel tank vacuum relief valve opening pressure
Socket wrench 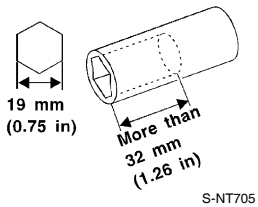 S-NT705	Removes and installs engine coolant temperature sensor
Oxygen sensor thread cleaner i.e.: (J-43897-18) (J-43897-12) 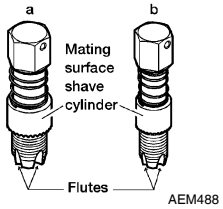 AEM488	Reconditions the exhaust system threads before installing a new oxygen sensor. Use with anti-seize lubricant shown below. **a: 18 mm diameter with pitch 1.5 mm for Zirconia Oxygen Sensor** **b: 12 mm diameter with pitch 1.25 mm for Titania Oxygen Sensor**
Anti-seize lubricant i.e.: (Permatex™ 133AR or equivalent meeting MIL specification MIL-A-907) 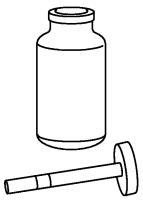 S-NT779	Lubricates oxygen sensor thread cleaning tool when reconditioning exhaust system threads.

ENGINE CONTROL SYSTEM

Schematic

INFOID:0000000005285714

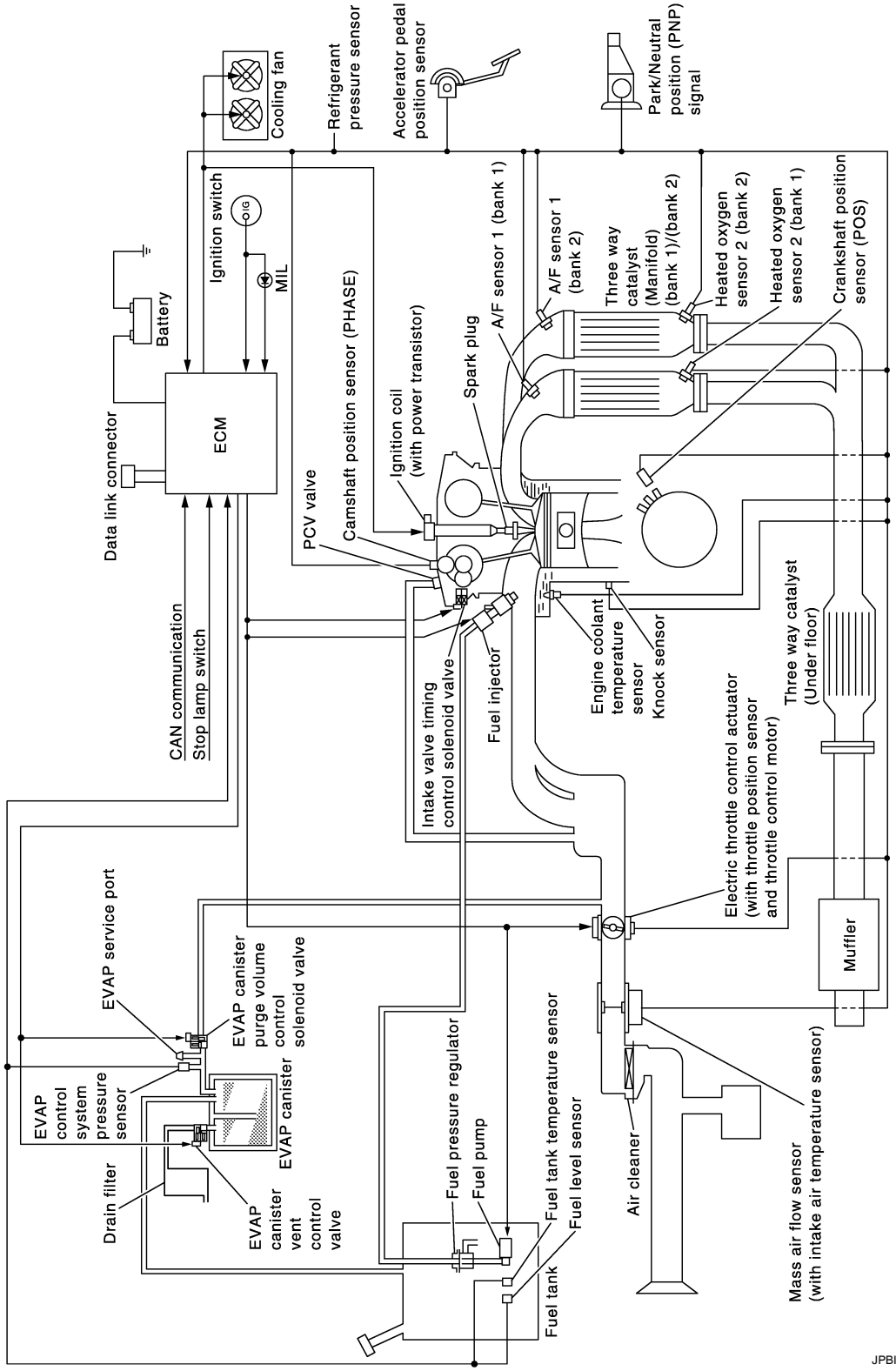

Multiport Fuel Injection (MFI) System

INFOID:0000000005285715

INPUT/OUTPUT SIGNAL CHART

Sensor	Input Signal to ECM	ECM function	Actuator
Crankshaft position sensor (POS)	Engine speed*3 Piston position	Fuel injection & mixture ratio control	Fuel injector
Camshaft position sensor (PHASE)			
Mass air flow sensor	Amount of intake air		
Engine coolant temperature sensor	Engine coolant temperature		
Air fuel ratio (A/F) sensor 1	Density of oxygen in exhaust gas		
Throttle position sensor	Throttle position		
Accelerator pedal position sensor	Accelerator pedal position		
Park/neutral position (PNP) signal	Gear position		
Battery	Battery voltage*3		
Knock sensor	Engine knocking condition		
EPS control unit	Power steering operation*2		
Heated oxygen sensor 2*1	Density of oxygen in exhaust gas		
Air conditioner switch	Air conditioner operation*2		
Combination meter	Vehicle speed*2		

*1: This sensor is not used to control the engine system under normal conditions.

*2: This signal is sent to the ECM through CAN communication line.

*3: ECM determines the start signal status by the signals of engine speed and battery voltage.

SYSTEM DESCRIPTION

The amount of fuel injected from the fuel injector is determined by the ECM. The ECM controls the length of time the valve remains open (injection pulse duration). The amount of fuel injected is a program value in the ECM memory. The program value is preset by engine operating conditions. These conditions are determined by input signals (for engine speed and intake air) from the crankshaft position sensor (POS), camshaft position sensor (PHASE) and the mass air flow sensor.

VARIOUS FUEL INJECTION INCREASE/DECREASE COMPENSATION

In addition, the amount of fuel injected is compensated to improve engine performance under various operating conditions as listed below.

<Fuel increase>
- During warm-up
- When starting the engine
- During acceleration
- Hot-engine operation
- When selector lever is changed from N to D (CVT models)
- High-load, high-speed operation

<Fuel decrease>
- During deceleration
- During high engine speed operation

MIXTURE RATIO FEEDBACK CONTROL (CLOSED LOOP CONTROL)

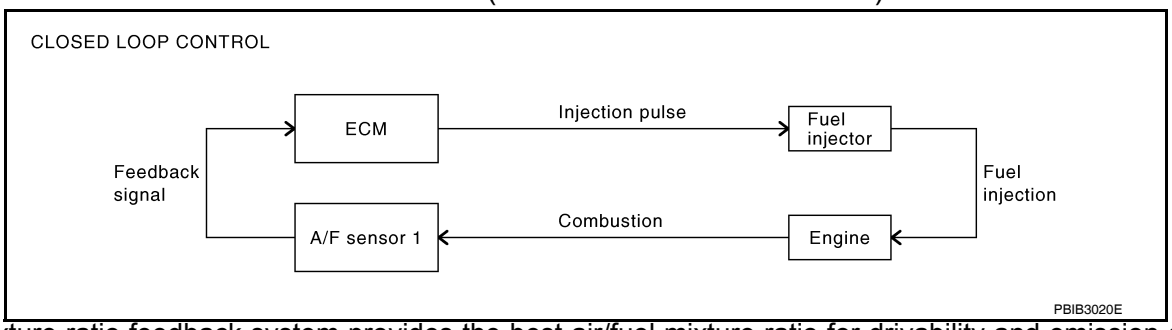

The mixture ratio feedback system provides the best air/fuel mixture ratio for drivability and emission control. The three way catalyst (manifold) can better reduce CO, HC and NOx emissions. This system uses air fuel

ratio (A/F) sensor 1 in the exhaust manifold to monitor whether the engine operation is rich or lean. The ECM adjusts the injection pulse width according to the sensor voltage signal. For more information about air fuel ratio (A/F) sensor 1, refer to EC-231. This maintains the mixture ratio within the range of stoichiometric (ideal air/fuel mixture).
This stage is referred to as the closed loop control condition.
Heated oxygen sensor 2 is located downstream of the three way catalyst (manifold). Even if the switching characteristics of air fuel ratio (A/F) sensor 1 shift, the air/fuel ratio is controlled to stoichiometric by the signal from heated oxygen sensor 2.

Open Loop Control

The open loop system condition refers to when the ECM detects any of the following conditions. Feedback control stops in order to maintain stabilized fuel combustion.
- Deceleration and acceleration
- High-load, high-speed operation
- Malfunction of air fuel ratio (A/F) sensor 1 or its circuit
- Insufficient activation of air fuel ratio (A/F) sensor 1 at low engine coolant temperature
- High engine coolant temperature
- During warm-up
- After shifting from N to D (CVT models)
- When starting the engine

MIXTURE RATIO SELF-LEARNING CONTROL

The mixture ratio feedback control system monitors the mixture ratio signal transmitted from air fuel ratio (A/F) sensor 1. This feedback signal is then sent to the ECM. The ECM controls the basic mixture ratio as close to the theoretical mixture ratio as possible. However, the basic mixture ratio is not necessarily controlled as originally designed. Both manufacturing differences (i.e., mass air flow sensor hot wire) and characteristic changes during operation (i.e., fuel injector clogging) directly affect mixture ratio.
Accordingly, the difference between the basic and theoretical mixture ratios is monitored in this system. This is then computed in terms of “injection pulse duration” to automatically compensate for the difference between the two ratios.
“Fuel trim” refers to the feedback compensation value compared against the basic injection duration. Fuel trim includes short-term fuel trim and long-term fuel trim.
“Short-term fuel trim” is the short-term fuel compensation used to maintain the mixture ratio at its theoretical value. The signal from air fuel ratio (A/F) sensor 1 indicates whether the mixture ratio is RICH or LEAN compared to the theoretical value. The signal then triggers a reduction in fuel volume if the mixture ratio is rich, and an increase in fuel volume if it is lean.
“Long-term fuel trim” is overall fuel compensation carried out long-term to compensate for continual deviation of the short-term fuel trim from the central value. Such deviation will occur due to individual engine differences, wear over time and changes in the usage environment.

FUEL INJECTION TIMING

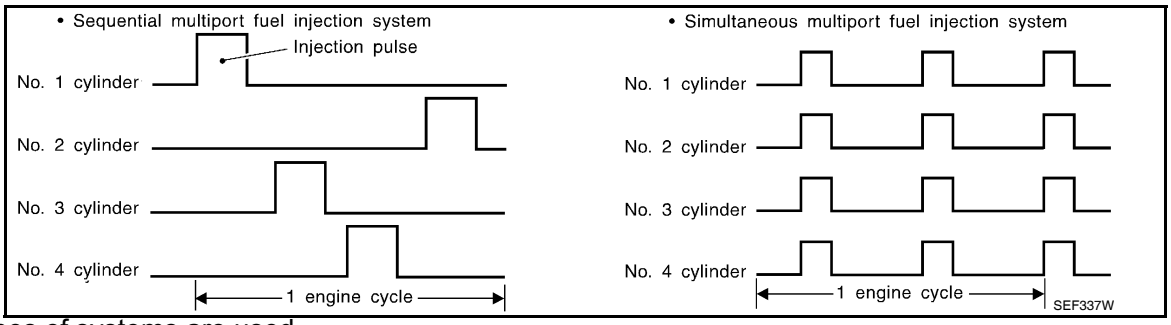

Two types of systems are used.

Sequential Multiport Fuel Injection System

Fuel is injected into each cylinder during each engine cycle according to the firing order. This system is used when the engine is running.

Simultaneous Multiport Fuel Injection System

Fuel is injected simultaneously into all four cylinders twice each engine cycle. In other words, pulse signals of the same width are simultaneously transmitted from the ECM.
The four fuel injectors will then receive the signals two times for each engine cycle.
This system is used when the engine is being started and/or if the fail-safe system (CPU) is operating.

FUEL SHUT-OFF

Fuel to each cylinder is cut off during deceleration or operation of the engine at excessively high speeds (CVT), operation of the engine at excessively high speeds or operation of the vehicle at excessively high speeds (M/T).

Electronic Ignition (EI) System

INFOID:0000000005285716

INPUT/OUTPUT SIGNAL CHART

Sensor	Input Signal to ECM	ECM function	Actuator
Crankshaft position sensor (POS)	Engine speed*2 Piston position	Ignition timing control	Power transistor
Camshaft position sensor (PHASE)			
Mass air flow sensor	Amount of intake air		
Engine coolant temperature sensor	Engine coolant temperature		
Throttle position sensor	Throttle position		
Accelerator pedal position sensor	Accelerator pedal position		
Battery	Battery voltage*2		
Knock sensor	Engine knocking		
Park/neutral position (PNP) signal	Gear position		
Combination meter	Vehicle speed*1		

*1: This signal is sent to the ECM through CAN communication line.

*2: ECM determines the start signal status by the signals of engine speed and battery voltage.

SYSTEM DESCRIPTION

Ignition order: 1 - 3 - 4 - 2

The ignition timing is controlled by the ECM to maintain the best air-fuel ratio for every running condition of the engine. The ignition timing data is stored in the ECM.

The ECM receives information such as the injection pulse width and camshaft position sensor (PHASE) signal. Computing this information, ignition signals are transmitted to the power transistor.

During the following conditions, the ignition timing is revised by the ECM according to the other data stored in the ECM.

- At starting
- During warm-up
- At idle
- At low battery voltage
- During acceleration

The knock sensor retard system is designed only for emergencies. The basic ignition timing is programmed within the anti-knocking zone, if recommended fuel is used under dry conditions. The retard system does not operate under normal driving conditions. If engine knocking occurs, the knock sensor monitors the condition. The signal is transmitted to the ECM. The ECM retards the ignition timing to eliminate the knocking condition.

Fuel Cut Control (at No Load and High Engine Speed)

INFOID:0000000005285717

INPUT/OUTPUT SIGNAL CHART

Sensor	Input Signal to ECM	ECM function	Actuator
Park/neutral position (PNP) signal	Neutral position	Fuel cut control	Fuel injector
Accelerator pedal position sensor	Accelerator pedal position		
Engine coolant temperature sensor	Engine coolant temperature		
Crankshaft position sensor (POS) Camshaft position sensor (PHASE)	Engine speed		
Combination meter	Vehicle speed*		

*: This signal is sent to the ECM through CAN communication line.

SYSTEM DESCRIPTION

If the engine speed is above 1,800 rpm under no load [for example, the selector lever position is P or N (CVT), Neutral (M/T) and engine speed is over 1,800 rpm] fuel will be cut off after some time. The exact time when the fuel is cut off varies based on engine speed.
Fuel cut will be operated until the engine speed reaches 1,500 rpm, then fuel cut will be cancelled.

NOTE:
This function is different from deceleration control listed under EC-1129, "Multiport Fuel Injection (MFI) System".

AIR CONDITIONING CUT CONTROL

Input/Output Signal Chart

INFOID:0000000005285718

Sensor	Input Signal to ECM	ECM function	Actuator
Air conditioner switch	Air conditioner ON signal*1	Air conditioner cut control	Air conditioner relay
Accelerator pedal position sensor	Accelerator pedal position		
Crankshaft position sensor (POS) Camshaft position sensor (PHASE)	Engine speed*2		
Engine coolant temperature sensor	Engine coolant temperature		
Battery	Battery voltage*2		
Refrigerant pressure sensor	Refrigerant pressure		
EPS control unit	Power steering operation*1		
Combination meter	Vehicle speed*1		

*1: This signal is sent to the ECM through CAN communication line.

*2: ECM determines the start signal status by the signals of engine speed and battery voltage.

System Description

INFOID:0000000005285719

This system improves engine operation when the air conditioner is used.
Under the following conditions, the air conditioner is turned off.
- When the accelerator pedal is fully depressed.
- When cranking the engine.
- At high engine speeds.
- When the engine coolant temperature becomes excessively high.
- When operating power steering during low engine speed or low vehicle speed.
- When engine speed is excessively low.
- When refrigerant pressure is excessively low or high.

AUTOMATIC SPEED CONTROL DEVICE (ASCD)

System Description

INFOID:0000000005285720

INPUT/OUTPUT SIGNAL CHART

Sensor	Input signal to ECM	ECM function	Actuator
ASCD brake switch	Brake pedal operation	ASCD vehicle speed control	Electric throttle control actuator
Stop lamp switch			
ASCD clutch switch (M/T models)	Clutch pedal operation		
ASCD steering switch	ASCD steering switch operation		
Park/neutral position (PNP) signal	Gear position		
Combination meter	Vehicle speed*		
TCM (CVT models)	Powertrain revolution*		

*: This signal is sent to the ECM through CAN communication line.

BASIC ASCD SYSTEM

Refer to Owner's Manual for ASCD operating instructions.
Automatic Speed Control Device (ASCD) allows a driver to keep vehicle at predetermined constant speed without depressing accelerator pedal. Driver can set vehicle speed in advance between approximately 40 km/h (25 MPH) and 144 km/h (89 MPH).
ECM controls throttle angle of electric throttle control actuator to regulate engine speed.
Operation status of ASCD is indicated by CRUISE indicator and SET indicator in combination meter. If any malfunction occurs in the ASCD system, it automatically deactivates control.
NOTE:
Always drive vehicle in safe manner according to traffic conditions and obey all traffic laws.

SET OPERATION

Press MAIN switch. (The CRUISE indicator in combination meter illuminates.)
When vehicle speed reaches a desired speed between approximately 40 km/h (25 MPH) and 144 km/h (89 MPH), press SET/COAST switch. (Then SET indicator in combination meter illuminates.)

ACCELERATE OPERATION

If the RESUME/ACCELERATE switch is depressed during cruise control driving, increase the vehicle speed until the switch is released or vehicle speed reaches maximum speed controlled by the system.
And then ASCD will maintain the new set speed.

CANCEL OPERATION

When any of following conditions exist, cruise operation will be canceled.
- CANCEL switch is pressed
- More than two switches an ASCD steering switch are pressed at the same time (Set speed will be cleared)
- Brake pedal is depressed
- Clutch pedal is depressed or gear position is changed to the neutral position (M/T models)
- Selector lever position is changed to N, P or R (CVT models)
- Vehicle speed decreased to 13 km/h (8 MPH) lower than the set speed

When the ECM detects any of the following conditions, the ECM will cancel the cruise operation and inform the driver by blinking indicator lamp.
- Engine coolant temperature is slightly higher than the normal operating temperature, CRUISE lamp may blink slowly.
  When the engine coolant temperature decreases to the normal operating temperature, CRUISE lamp will stop blinking and the cruise operation will be able to work by pressing SET/COAST switch or RESUME/ACCELERATE switch.
- Malfunction for some self-diagnoses regarding ASCD control: SET lamp will blink quickly.

If MAIN switch is turned to OFF while ASCD is activated, all of ASCD operations will be canceled and vehicle speed memory will be erased.

COAST OPERATION

When the SET/COAST switch is depressed during cruise control driving, decrease vehicle set speed until the switch is released. And then ASCD will maintain the new set speed.

RESUME OPERATION

When the RESUME/ACCELERATE switch is depressed after canceling operation other than depressing the MAIN switch, vehicle speed will return to last set speed. To resume vehicle set speed, vehicle condition must meet following conditions.

- Brake pedal is released.
- Clutch pedal is released (M/T models)
- Selector lever position is in other than P and N (CVT models)
- Vehicle speed is greater than 40 km/h (25 MPH) and less than 144 km/h (89 MPH)

Component Description

INFOID:0000000005285721

ASCD STEERING SWITCH

Refer to EC-1561.

ASCD BRAKE SWITCH

Refer to EC-1567 and EC-1634.

ASCD CLUTCH SWITCH

Refer to EC-1567 and EC-1634.

STOP LAMP SWITCH

Refer to EC-1567, EC-1580 and EC-1634.

ELECTRIC THROTTLE CONTROL ACTUATOR

Refer to EC-1584, EC-1588, EC-1594 and EC-1599.

ASCD INDICATOR

Refer to EC-1642.

CAN COMMUNICATION

System Description

INFOID:0000000005285722

CAN (Controller Area Network) is a serial communication line for real time application. It is an on-vehicle multiplex communication line with high data communication speed and excellent error detection ability. Many electronic control units are equipped onto a vehicle, and each control unit shares information and links with other control units during operation (not independent). In CAN communication, control units are connected with 2 communication lines (CAN H line, CAN L line) allowing a high rate of information transmission with less wiring. Each control unit transmits/receives data but selectively reads required data only.

EVAPORATIVE EMISSION SYSTEM

Description

INFOID:0000000005285723

SYSTEM DESCRIPTION

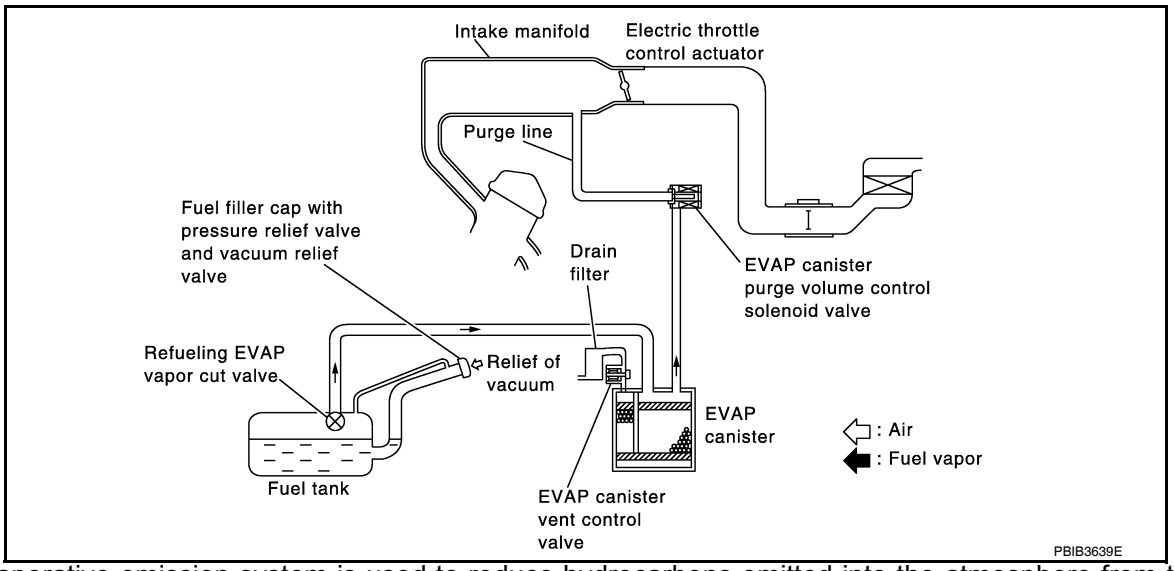

The evaporative emission system is used to reduce hydrocarbons emitted into the atmosphere from the fuel system. This reduction of hydrocarbons is accomplished by activated charcoals in the EVAP canister.
The fuel vapor in the sealed fuel tank is led into the EVAP canister which contains activated carbon and the vapor is stored there when the engine is not operating or when refueling to the fuel tank.
The vapor in the EVAP canister is purged by the air through the purge line to the intake manifold when the engine is operating. EVAP canister purge volume control solenoid valve is controlled by ECM. When the engine operates, the flow rate of vapor controlled by EVAP canister purge volume control solenoid valve is proportionally regulated as the air flow increases.
EVAP canister purge volume control solenoid valve also shuts off the vapor purge line during decelerating and idling.

EVAPORATIVE EMISSION LINE DRAWING

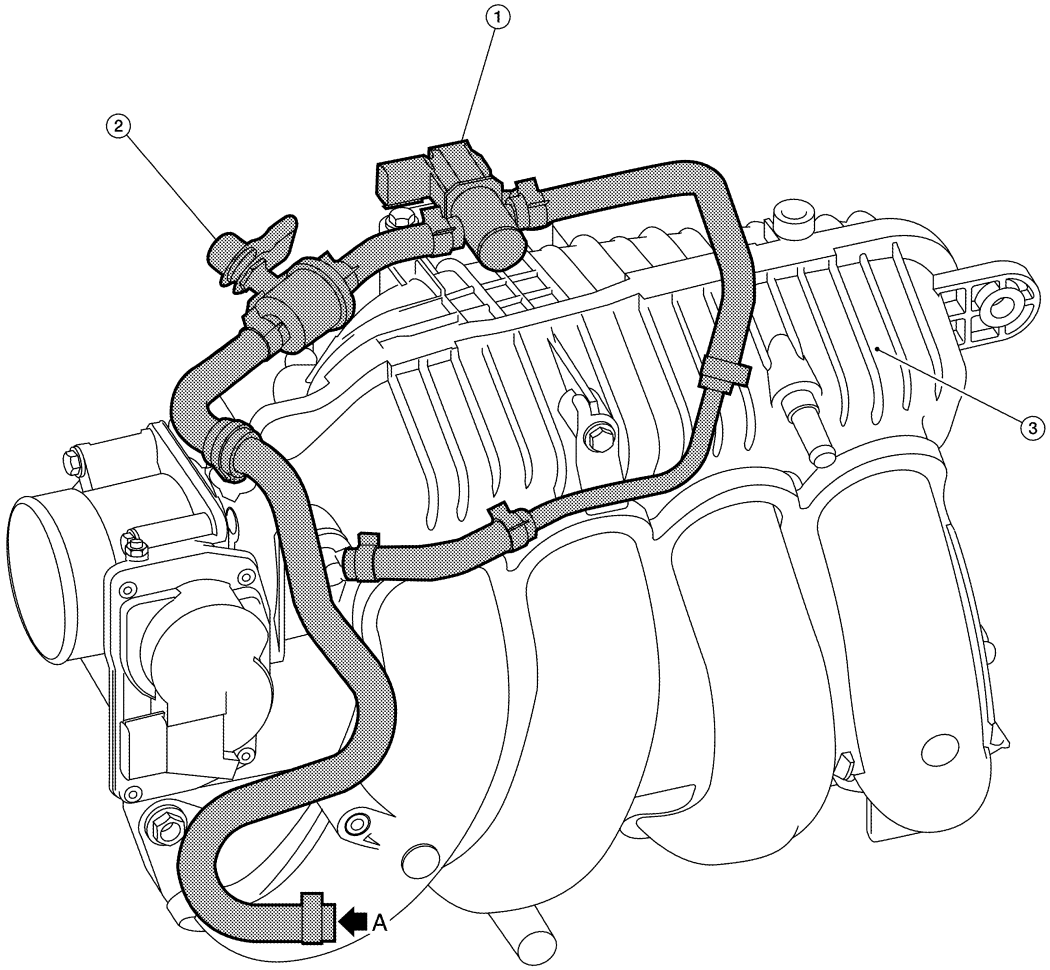

BBIA0895E

⬅: From next figure

1. EVAP canister purge volume control solenoid valve
2. EVAP service port
3. Intake manifold collector

NOTE: Do not use soapy water or any type of solvent while installing vacuum hose or purge hoses.

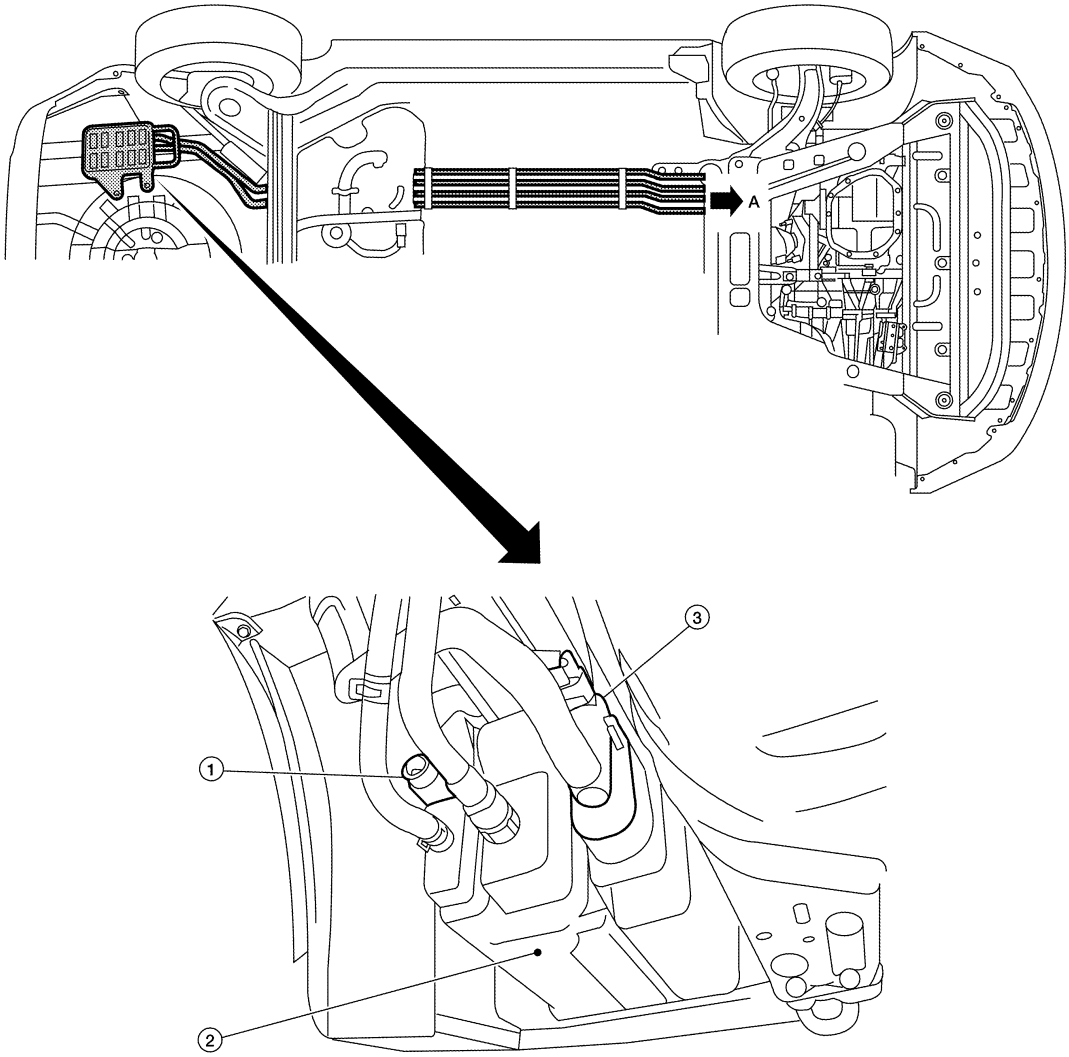

⬅: To previous page

1. EVAP control system pressure sensor 2. EVAP canister 3. EVAP canister vent control valve

NOTE: Do not use soapy water or any type of solvent while installing vacuum hose or purge hoses.

Component Inspection

INFOID:0000000005285724

EVAP CANISTER

Check EVAP canister as follows:

1. Block port **(B)**.
2. Blow air into port **(A)** and confirm that it flows freely out of port (**C**).
3. Release blocked port **(B)**.
4. Apply vacuum pressure to port **(B)** and confirm that vacuum pressure exists at the ports **(A)** and **(C)**.
5. Block port **(A)** and (**B**).
6. Apply pressure to port (**C**) and check that there is no leakage.

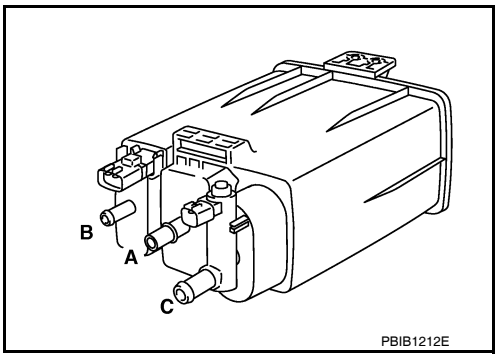

FUEL TANK VACUUM RELIEF VALVE (BUILT INTO FUEL FILLER CAP)

1. Wipe clean valve housing.

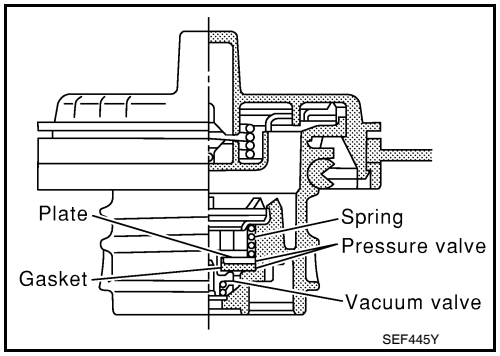

2. Check valve opening pressure and vacuum.

Pressure: **15.3 - 20.0 kPa**
(0.156 - 0.204 kg/cm^2, 2.22 - 2.90 psi)
Vacuum: **–6.0 to –3.4 kPa**
(–0.061 to –0.035 kg/cm^2, –0.87 to –0.48 psi)

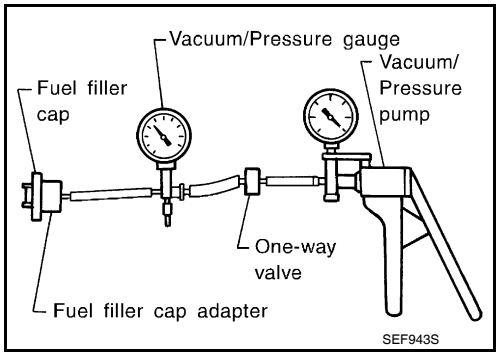

3. If out of specification, replace fuel filler cap as an assembly.

CAUTION:
Use only a genuine fuel filler cap as a replacement. If an incorrect fuel filler cap is used, the MIL may come on.

EVAP CANISTER PURGE VOLUME CONTROL SOLENOID VALVE

Refer to EC-1467, "Component Inspection".

FUEL TANK TEMPERATURE SENSOR

Refer to EC-1409, "Component Inspection".

EVAP CANISTER VENT CONTROL VALVE

Refer to EC-1472, "Component Inspection".

EVAP CONTROL SYSTEM PRESSURE SENSOR

Refer to EC-1488, "Component Inspection".

EVAP SERVICE PORT

Positive pressure is delivered to the EVAP system through the EVAP service port. If fuel vapor leakage in the EVAP system occurs, use a leak detector to locate the leak.

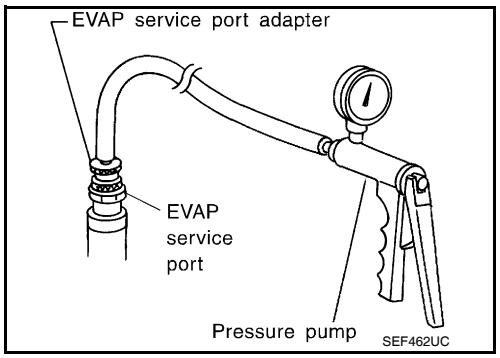

Removal and Installation

INFOID:0000000005285725

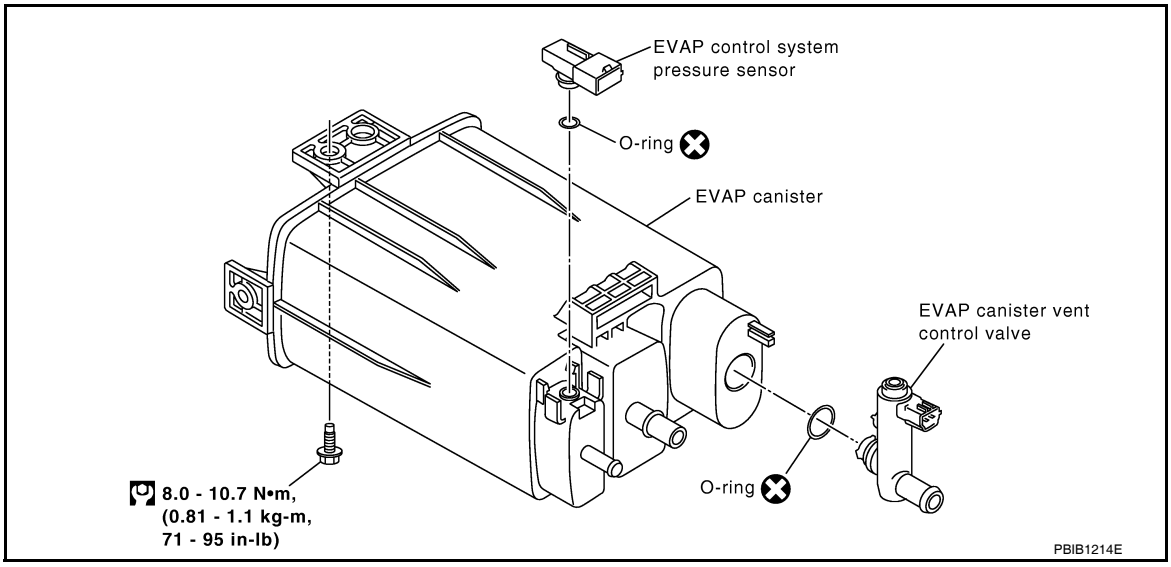

EVAP CANISTER

Removal

1. Remove EVAP canister protector.
2. Disconnect the EVAP control pressure sensor connector.
3. Remove the EVAP control pressure sensor and O-ring, if necessary.
4. Disconnect EVAP canister purge hose.
5. Remove the EVAP canister retaining bolt.
6. Disconnect fuel tank EVAP breather hose.
7. Disconnect EVAP vent control valve connector.
8. Disconnect the EVAP vent control valve hose.
9. Remove the EVAP canister.
10. Remove the EVAP vent control valve and O-ring, if necessary.

Installation

Installation is in the reverse order of removal.

CAUTION:

Always replace O-rings with a new one.

EVAP CANISTER CONTROL PRESSURE SENSOR

Removal

1. Remove EVAP canister protector.
2. Disconnect the EVAP control pressure sensor connector.
3. Remove the EVAP canister control pressure sensor and O-ring.

Installation

Installation is in the reverse order of removal.

CAUTION:

Always replace O-ring with a new one.

EVAP CANISTER VENT CONTROL VALVE

1. Remove EVAP canister protector.
2. Disconnect EVAP vent control valve connector.
3. Disconnect the EVAP vent control valve hose.

4. Turn EVAP canister vent control valve counterclockwise.
5. Remove the EVAP canister vent control valve.

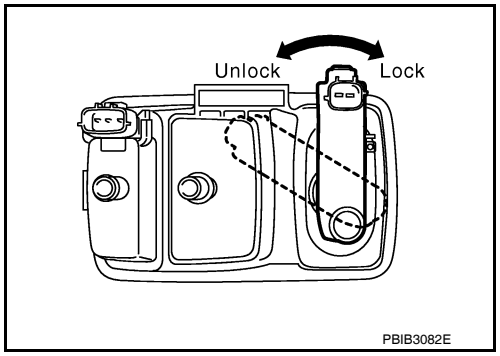

Installation

Installation is in the reverse order of removal.

CAUTION:

Always replace O-ring with a new one.

How to Detect Fuel Vapor Leakage

INFOID:0000000005285726

CAUTION:

- **Never use compressed air or a high pressure pump.**
- **Never exceed 4.12 kPa (0.042 kg/cm^2, 0.6 psi) of pressure in EVAP system.**

NOTE:

- Do not start engine.
- Improper installation of EVAP service port adapter to the EVAP service port may cause a leak.

WITH CONSULT-III

1. Attach the EVAP service port adapter securely to the EVAP service port.
2. Also attach the pressure pump and hose to the EVAP service port adapter.
3. Turn ignition switch ON.
4. Select the “EVAP SYSTEM CLOSE” of “WORK SUPPORT” mode with CONSULT-III.
5. Touch “START”. A bar graph (Pressure indicating display) will appear on the screen.
6. Apply positive pressure to the EVAP system until the pressure indicator reaches the middle of the bar graph.
7. Remove EVAP service port adapter and hose with pressure pump.
8. Locate the leak using a leak detector. Refer to EC-1138, "Description".

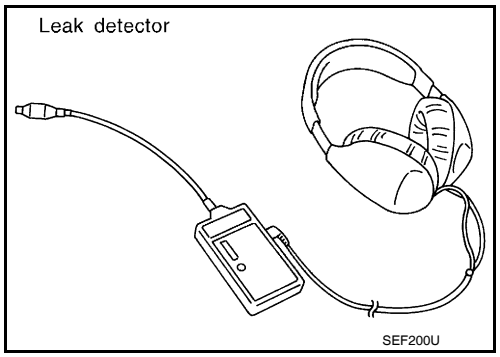

WITHOUT CONSULT-III

1. Attach the EVAP service port adapter securely to the EVAP service port.
2. Also attach the pressure pump with pressure gauge to the EVAP service port adapter.

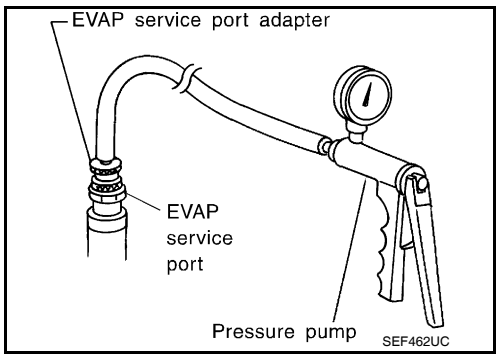

3. Apply battery voltage to the terminal of EVAP canister vent control valve (3) to make a closed EVAP system.
   - This illustration is a view from under vehicle
   - EVAP control system pressure sensor (1)
   - EVAP canister (2)
4. To locate the leak, deliver positive pressure to the EVAP system until pressure gauge points reach 1.38 to 2.76 kPa (0.014 to 0.028 kg/cm^2, 0.2 to 0.4 psi).
5. Remove EVAP service port adapter and hose with pressure pump.
6. Locate the leak using a leak detector. Refer to EC-1138, "Description".

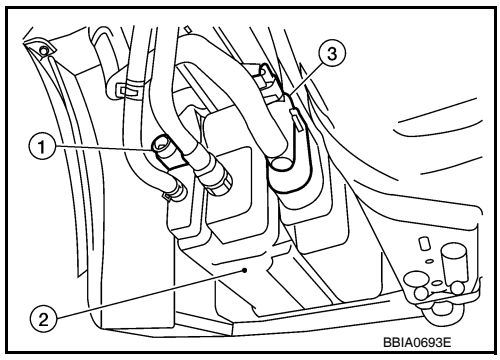

ON BOARD REFUELING VAPOR RECOVERY (ORVR)

System Description

INFOID:0000000005285727

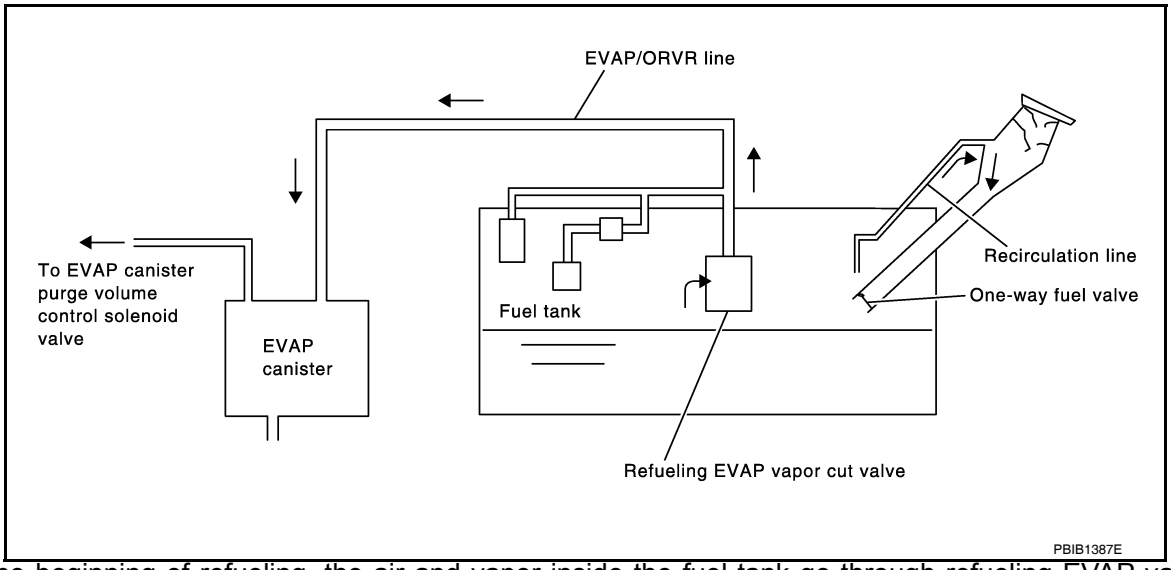

From the beginning of refueling, the air and vapor inside the fuel tank go through refueling EVAP vapor cut valve and EVAP/ORVR line to the EVAP canister. The vapor is absorbed by the EVAP canister and the air is released to the atmosphere.

When the refueling has reached the full level of the fuel tank, the refueling EVAP vapor cut valve is closed and refueling is stopped because of auto shut-off. The vapor which was absorbed by the EVAP canister is purged during driving.

WARNING:

When conducting inspections below, be sure to observe the following:

- **Put a "CAUTION: FLAMMABLE" sign in workshop.**
- **Do not smoke while servicing fuel system. Keep open flames and sparks away from work area.**
- **Be sure to furnish the workshop with a CO_2 fire extinguisher.**

CAUTION:

- **Before removing fuel line parts, carry out the following procedures:**
  - **Put drained fuel in an explosion-proof container and put lid on securely.**
  - **Release fuel pressure from fuel line. Refer to EC-1195, "Fuel Pressure Check".**
  - **Disconnect negative battery cable.**
- **Always replace O-ring when the fuel gauge retainer is removed.**
- **Never kink or twist hose and tube when they are installed.**
- **Never tighten hose and clamps excessively to avoid damaging hoses.**
- **After installation, run engine and check for fuel leaks at connections.**
- **Never attempt to top off the fuel tank after the fuel pump nozzle shuts off automatically. Continued refueling may cause fuel overflow, resulting in fuel spray and possibly a fire.**

Diagnosis Procedure

INFOID:0000000005285728

SYMPTOM: FUEL ODOR FROM EVAP CANISTER IS STRONG.

1. CHECK EVAP CANISTER

1. Remove EVAP canister with EVAP canister vent control valve and EVAP control system pressure sensor attached.
2. Weigh the EVAP canister with EVAP canister vent control valve and EVAP control system pressure sensor attached.
   The weight should be less than 1.9 kg (4.2 lb).

OK or NG

OK >> GO TO 2.
NG >> GO TO 3.

2. CHECK IF EVAP CANISTER IS SATURATED WITH WATER

Does water drain from the EVAP canister?

Yes or No

Yes >> GO TO 3.
No >> GO TO 6.

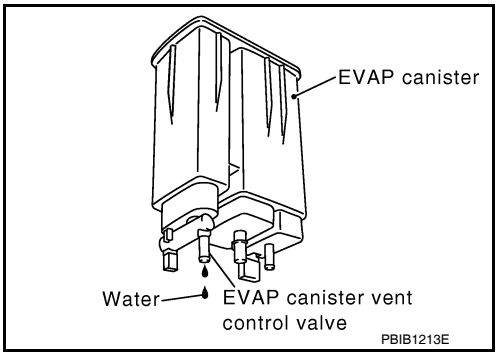

3. REPLACE EVAP CANISTER

Replace EVAP canister with a new one.

>> GO TO 4.

4. CHECK DRAIN FILTER

Refer to EC-1148, "Component Inspection".

OK or NG

OK >> GO TO 5.
NG >> Replace drain filter.

5. DETECT MALFUNCTIONING PART

Check the EVAP hose between EVAP canister and vehicle frame for clogging or poor connection.

>> Repair or replace EVAP hose.

6. CHECK REFUELING EVAP VAPOR CUT VALVE

Refer to EC-1148, "Component Inspection".

OK or NG

OK >> **INSPECTION END**
NG >> Replace refueling EVAP vapor cut valve with fuel tank.

SYMPTOM: CANNOT REFUEL/FUEL ODOR FROM THE FUEL FILLER OPENING IS STRONG WHILE REFUELING.

1. CHECK EVAP CANISTER

1. Remove EVAP canister with EVAP canister vent control valve and EVAP control system pressure sensor attached.
2. Weigh the EVAP canister with EVAP canister vent control valve and EVAP control system pressure sensor attached.
   The weight should be less than 1.9 kg (4.2 lb).

OK or NG

OK >> GO TO 2.
NG >> GO TO 3.

2. CHECK IF EVAP CANISTER IS SATURATED WITH WATER

Does water drain from the EVAP canister?

Yes or No

Yes >> GO TO 3.
No >> GO TO 6.

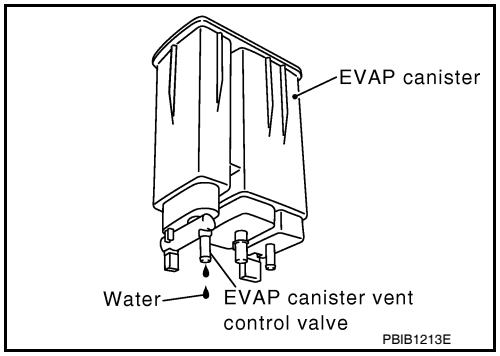

3. REPLACE EVAP CANISTER

Replace EVAP canister with a new one.

>> GO TO 4.

4. CHECK DRAIN FILTER

Refer to EC-1148, "Component Inspection".

OK or NG

OK >> GO TO 5.
NG >> Replace drain filter.

5. DETECT MALFUNCTIONING PART

Check the EVAP hose between EVAP canister and vehicle frame for clogging or poor connection.

>> Repair or replace EVAP hose.

6. CHECK VENT HOSES AND VENT TUBES

Check hoses and tubes between EVAP canister and refueling EVAP vapor cut valve for clogging, kinks, looseness and improper connection.

OK or NG

OK >> GO TO 7.
NG >> Repair or replace hoses and tubes.

7. CHECK FILLER NECK TUBE

Check recirculation line for clogging, dents and cracks.

OK or NG

OK >> GO TO 8.
NG >> Replace filler neck tube.

8. CHECK REFUELING EVAP VAPOR CUT VALVE

Refer to EC-1148, "Component Inspection".

OK or NG

OK >> GO TO 9.
NG >> Replace refueling EVAP vapor cut valve with fuel tank.

9. CHECK FUEL FILLER TUBE

Check filler neck tube and hose connected to the fuel tank for clogging, dents and cracks.

OK or NG

OK >> GO TO 10.
NG >> Replace fuel filler tube.

10. CHECK ONE-WAY FUEL VALVE-I

Check one-way valve for clogging.

OK or NG

OK >> GO TO 11.

NG >> Repair or replace one-way fuel valve with fuel tank.

11. CHECK ONE-WAY FUEL VALVE-II

1. Check that fuel is drained from the tank.
2. Remove fuel filler tube and hose.
3. Check one-way fuel valve for operation as follows.
   When a stick is inserted, the valve should open, when removing stick it should close.
   Do not drop any material into the tank.

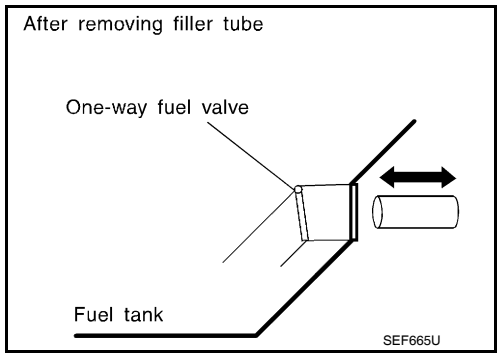

OK or NG

OK >> **INSPECTION END**
NG >> Replace fuel filler tube or replace one-way fuel valve with fuel tank.

Component Inspection

INFOID:0000000005285729

REFUELING EVAP VAPOR CUT VALVE

With CONSULT-III

1. Remove fuel tank. Refer to FL-10.
2. Drain fuel from the tank as follows:
a. Remove fuel feed hose located on the fuel gauge retainer.
b. Connect a spare fuel hose, one side to fuel gauge retainer where the hose was removed and the other side to a fuel container.
c. Drain fuel using “FUEL PUMP RELAY” in “ACTIVE TEST” mode with CONSULT-III.
3. Check refueling EVAP vapor cut valve for being stuck to close as follows.
   Blow air into the refueling EVAP vapor cut valve (from the end of EVAP/ORVR line hose), and check that the air flows freely into the tank.
4. Check refueling EVAP vapor cut valve for being stuck to open as follows.
a. Connect vacuum pump to hose end.
b. Remove fuel gauge retainer with fuel gauge unit.
   Always replace O-ring with new one.
c. Turn fuel tank upside down.
d. Apply vacuum pressure to hose end –13.3 kPa (–0.136 kg/cm^2, -1.93 psi) with fuel gauge retainer remaining open and check that the pressure is applicable.

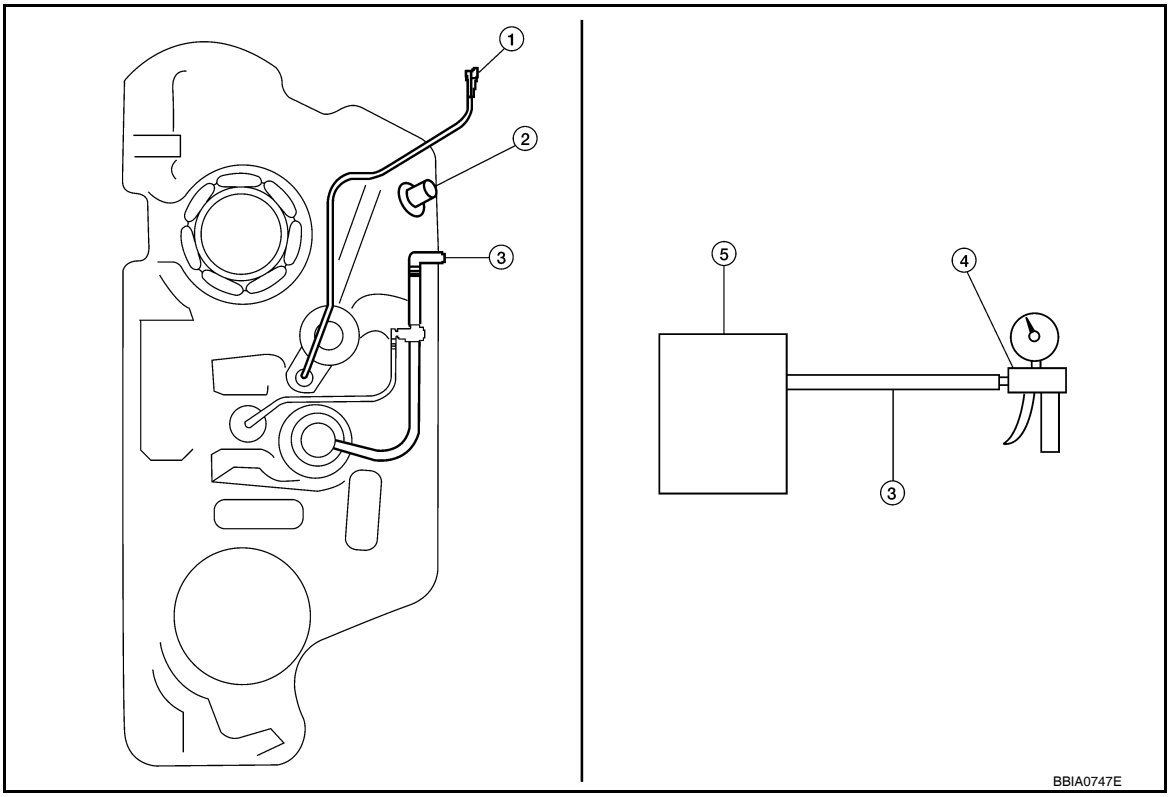

1. Recirculation line
2. Filler tube
3. EVAP/ORVR line
4. Vacuum/pressure handy pump
5. Fuel tank

Without CONSULT-III

1. Remove fuel tank. Refer to FL-10.
2. Drain fuel from the tank as follows:

a. Remove fuel gauge retainer.
b. Drain fuel from the tank using a handy pump into a fuel container.

3. Check refueling EVAP vapor cut valve for being stuck to close as follows.
   Blow air into the refueling EVAP vapor cut valve (from the end of EVAP/ORVR line hose), and check that the air flows freely into the tank.
4. Check refueling EVAP vapor cut valve for being stuck to open as follows.

a. Connect vacuum pump to hose end.
b. Remove fuel gauge retainer with fuel gauge unit.
   Always replace O-ring with new one.
c. Turn fuel tank upside down.
d. Apply vacuum pressure to hose end –13.3 kPa (–0.136 kg/cm^2, –1.93 psi) with fuel gauge retainer remaining open and check that the pressure is applicable.

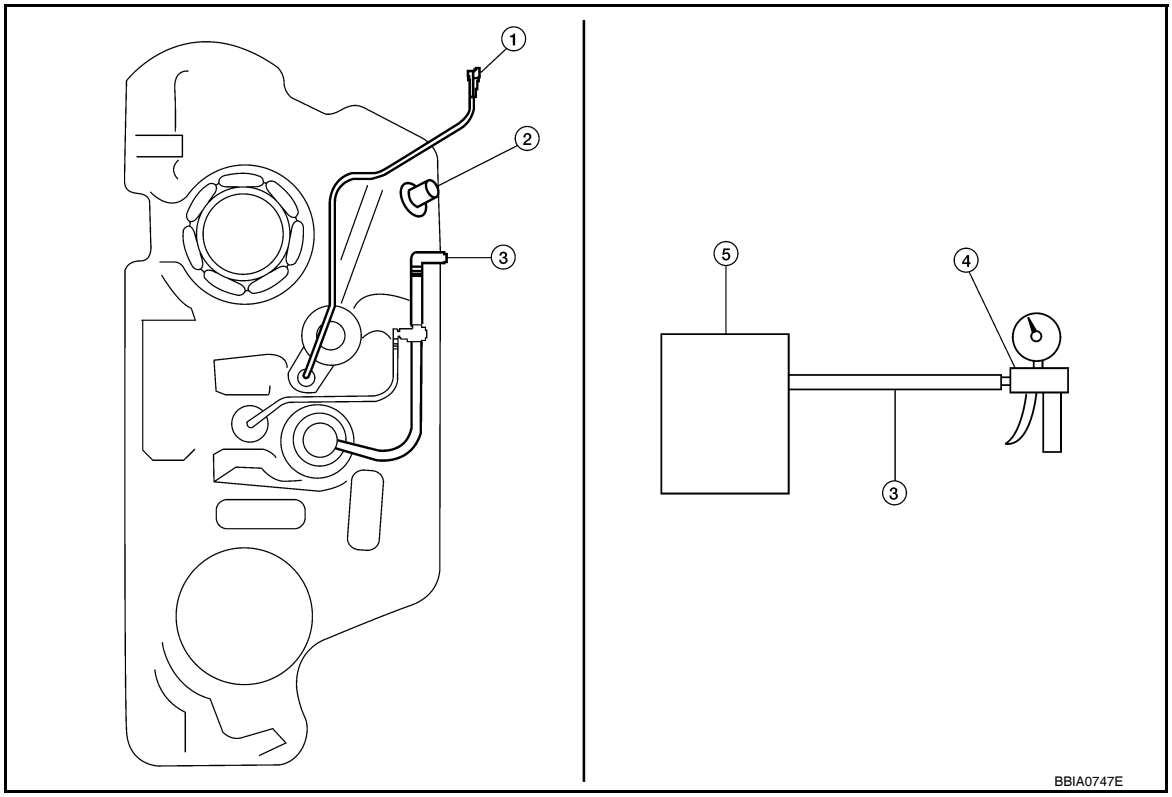

1. Recirculation line
2. Filler tube
3. EVAP/ORVR line
4. Vacuum/pressure handy pump
5. Fuel tank

DRAIN FILTER

1. Check visually for insect nests in the drain filter air inlet.
2. Check visually for cracks or flaws in the appearance.
3. Check visually for cracks or flaws in the hose.
4. Blow air into port A and check that it flows freely out of port B.
5. Block port B.
6. Blow air into port A and check that there is no leakage.
7. If NG, replace drain filter.

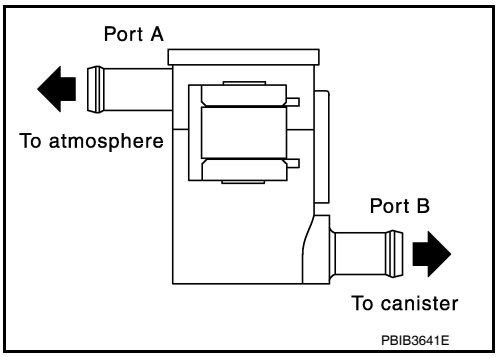

POSITIVE CRANKCASE VENTILATION

Description

INFOID:0000000005285730

SYSTEM DESCRIPTION

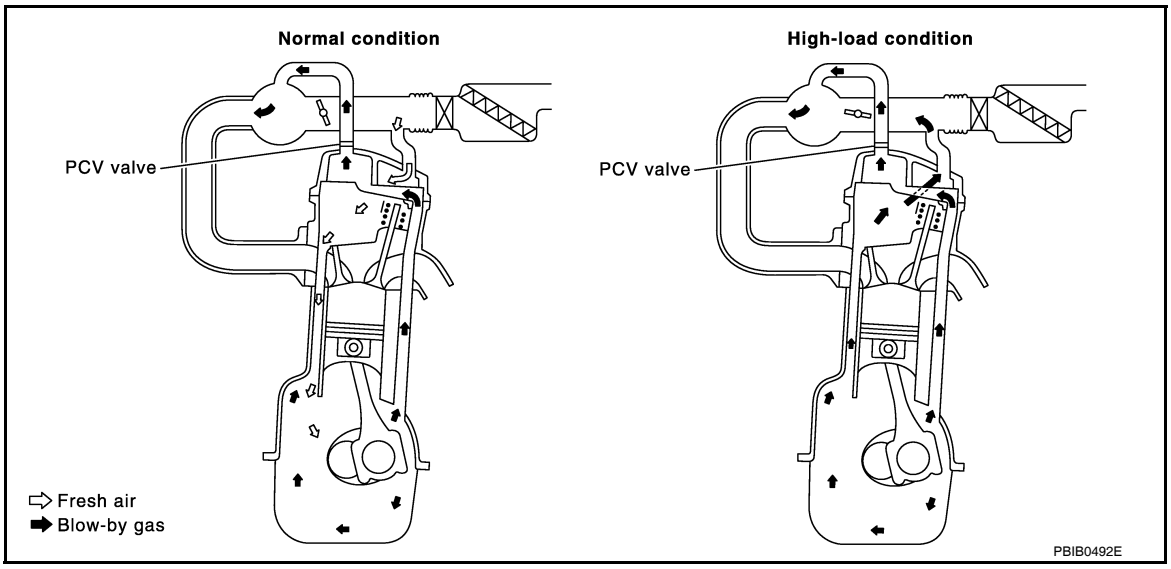

This system returns blow-by gas to the intake manifold.
The positive crankcase ventilation (PCV) valve is provided to conduct crankcase blow-by gas to the intake manifold. During partial throttle operation of the engine, the intake manifold sucks the blow-by gas through the PCV valve. Normally, the capacity of the valve is sufficient to handle any blow-by and a small amount of ventilating air. The ventilating air is then drawn from the air inlet tubes into the crankcase. In this process the air passes through the hose connecting air inlet tubes to rocker cover.
Under full-throttle condition, the manifold vacuum is insufficient to draw the blow-by flow through the valve. The flow goes through the hose connection in the reverse direction.
On vehicles with an excessively high blow-by, the valve does not meet the requirement. This is because some of the flow will go through the hose connection to the air inlet tubes under all conditions.

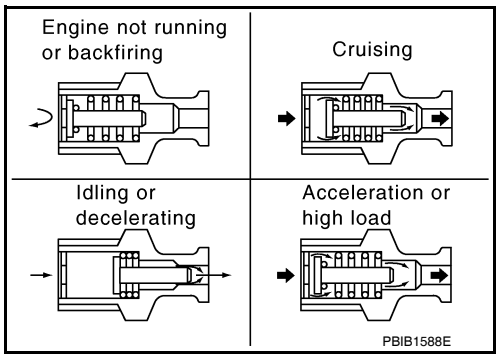

Component Inspection

INFOID:0000000005285731

PCV (POSITIVE CRANKCASE VENTILATION) VALVE

With engine running at idle, remove PCV valve from rocker cover. A properly working valve makes a hissing noise as air passes through it. A strong vacuum should be felt immediately when a finger is placed over valve inlet.

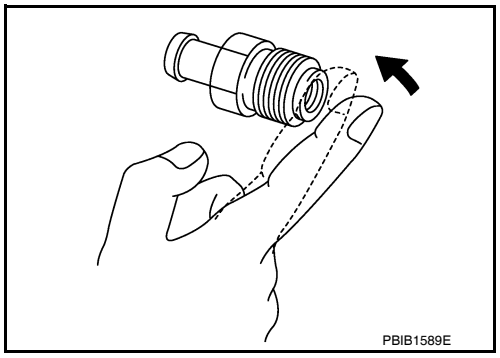

PCV VALVE VENTILATION HOSE

1. Check hoses and hose connections for leaks.
2. Disconnect all hoses and clean with compressed air. If any hose cannot be freed of obstructions, replace.

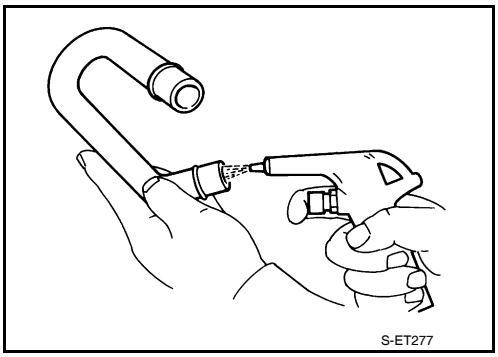

NVIS (NISSAN VEHICLE IMMOBILIZER SYSTEM-NATS)

Description

INFOID:0000000005285732

- **If the security indicator illuminates with the ignition switch ON or DTC P1610 - P1615 is displayed in "SELF DIAGNOSTIC RESULT" mode, perform the trouble diagnosis for corresponding to the detected DTC. Refer to EC-583, "P1610-P1615".**
- **Check that no DTC is displayed in "SELF DIAGNOSIS RESULT" mode of "BCM" before erasing the detected DTC in "ENGINE" mode with CONSULT-III.**
- **When replacing ECM, refer to EC-653, "Procedure After Replacing ECM".**

ON BOARD DIAGNOSTIC (OBD) SYSTEM

Introduction

INFOID:0000000005285733

The ECM has an on board diagnostic system, which detects malfunctions related to engine sensors or actuators. The ECM also records various emission-related diagnostic information including:

Emission-related diagnostic information	Diagnostic service
Diagnostic Trouble Code (DTC)	Service $03 of SAE J1979/ISO 15031-5
Freeze Frame data	Service $02 of SAE J1979/ISO 15031-5
System Readiness Test (SRT) code	Service $01 of SAE J1979/ISO 15031-5
1st trip Diagnostic Trouble Code (1st Trip DTC)	Service $07 of SAE J1979/ISO 15031-5
1st trip Freeze Frame data	—
Test values and Test limits	Service $06 of SAE J1979/ISO 15031-5
Calibration ID	Service $09 of SAE J1979/ISO 15031-5
Permanent Diagnostic Trouble Code (Permanent DTC)	Service $0A* of SAE J1979/ISO 15031-5

*: Service $0A is not applied for regions where it is not mandated.

The above information can be checked using procedures listed in the table below.

×: Applicable —: Not applicable

	DTC	1st trip DTC	Freeze Frame data	1st trip Freeze Frame data	SRT code	SRT status	Test value	Permanent DTC status
CONSULT-III	×	×	×	×	×	×	—	×
GST	×	×	×	—	×	×	×	×
ECM	×	×*	—	—	—	×	—	—

*: When DTC and 1st trip DTC simultaneously appear on the display, they cannot be clearly distinguished from each other.

The malfunction indicator lamp (MIL) on the instrument panel illuminates when the same malfunction is detected in two consecutive trips (Two trip detection logic), or when the ECM enters fail-safe mode. (Refer to EC-1202, "Fail-safe Chart".)

Two Trip Detection Logic

INFOID:0000000005285734

When a malfunction is detected for the first time, 1st trip DTC and 1st trip Freeze Frame data are stored in the ECM memory. The MIL will not illuminate at this stage. <1st trip>
If the same malfunction is detected again during the next drive, the DTC and Freeze Frame data are stored in the ECM memory, and the MIL illuminates. The MIL illuminates at the same time when the DTC is stored. <2nd trip> The “trip” in the “Two Trip Detection Logic” means a driving mode in which self-diagnosis is performed during vehicle operation. Specific on board diagnostic items will cause the ECM to illuminate or blink the MIL, and store DTC and Freeze Frame data, even in the 1st trip, as shown below.

×: Applicable —: Not applicable

Items	MIL				DTC		1st trip DTC	
	1st trip		2nd trip		1st trip displaying	2nd trip displaying	1st trip displaying	2nd trip displaying
	Blinking	Illuminating	Blinking	Illuminating				
Misfire (Possible three way catalyst damage) — DTC: P0300 - P0304 is being detected	×	—	—	—	—	—	×	—
Misfire (Possible three way catalyst damage) — DTC: P0300 - P0304 is being detected	—	—	×	—	—	×	—	—
One trip detection diagnoses (Refer to EC-1155, "Emission-related Diagnostic Information".)	—	×	—	—	×	—	—	—
Except above	—	—	—	×	—	×	×	—

When there is an open circuit on MIL circuit, the ECM cannot warn the driver by MIL illuminating when there is malfunction on engine control system.

Therefore, when electrical controlled throttle and part of ECM related diagnoses are continuously detected as NG for 5 trips, ECM warns the driver that engine control system malfunctions and MIL circuit is open by means of operating fail-safe function.
The fail-safe function also operates when above diagnoses except MIL circuit are detected, and demands the driver to repair the malfunction.

Engine operating condition in fail-safe mode	Engine speed will not rise more than 2,500 rpm due to the fuel cut

Emission-related Diagnostic Information

INFOID:0000000005548646

EMISSION-RELATED DIAGNOSTIC INFORMATION ITEMS

×: Applicable —: Not applicable

Items (CONSULT-III screen terms)	DTC*1		SRT code	Trip	MIL	Permanent DTC group*4	Reference
	CONSULT-III GST*2	ECM*3					
LOST COMM (TCM)	U0101	0101*5	—	1 (CVT) — (M/T)	× (CVT) — (M/T)	B	EC-1252
LOST COMM (BCM)	U0140	0140*5	—	1	×	B	EC-1254
CAN COMM CIRCUIT	U1001	1001*5	—	2	—	—	EC-1256
NO DTC IS DETECTED. FURTHER TESTING MAY BE REQUIRED.	**P0000**	**0000**	—	—	**Flashing*6**	—	EC-1178
INT/V TIM CONT-B1	P0011	0011	×	2	×	B	EC-1258
A/F SEN1 HTR (B1)	P0031	0031	—	2	×	B	EC-1262
A/F SEN1 HTR (B1)	P0032	0032	—	2	×	B	EC-1262
HO2S2 HTR (B1)	P0037	0037	—	2	×	B	EC-1269
HO2S2 HTR (B1)	P0038	0038	—	2	×	B	EC-1269
A/F SEN1 HTR (B2)	P0051	0051	—	2	×	B	EC-1262
A/F SEN1 HTR (B2)	P0052	0052	—	2	×	B	EC-1262
HO2S2 HTR (B2)	P0057	0057	—	2	×	B	EC-1269
HO2S2 HTR (B2)	P0058	0058	—	2	×	B	EC-1269
INT/V TIM V/CIR-B1	P0075	0075	—	2	×	B	EC-1277
MAF SEN/CIRCUIT-B1	P0101	0101	—	2	×	B	EC-1282
MAF SEN/CIRCUIT-B1	P0102	0102	—	1	×	B	EC-1289
MAF SEN/CIRCUIT-B1	P0103	0103	—	1	×	B	EC-1289
IAT SEN/CIRCUIT-B1	P0112	0112	—	2	×	B	EC-1296
IAT SEN/CIRCUIT-B1	P0113	0113	—	2	×	B	EC-1296
ECT SEN/CIRC	P0116	0116	—	2	×	B	EC-1300
ECT SEN/CIRC	P0117	0117	—	1	×	B	EC-1303
ECT SEN/CIRC	P0118	0118	—	1	×	B	EC-1303
TP SEN 2/CIRC-B1	P0122	0122	—	1	×	B	EC-1308
TP SEN 2/CIRC-B1	P0123	0123	—	1	×	B	EC-1308
ECT SENSOR	P0125	0125	—	2	×	B	EC-1313
IAT SENSOR-B1	P0127	0127	—	2	×	B	EC-1316
THERMSTAT FNCTN	P0128	0128	—	2	×	B	EC-1319
A/F SENSOR1 (B1)	P0130	0130	—	2	×	A	EC-1321
A/F SENSOR1 (B1)	P0131	0131	—	2	×	B	EC-1329
A/F SENSOR1 (B1)	P0132	0132	—	2	×	B	EC-1337
A/F SENSOR1 (B1)	P0133	0133	×	2	×	A	EC-1345

Items (CONSULT-III screen terms)	DTC*1		SRT code	Trip	MIL	Permanent DTC group*4	Reference
	CONSULT-III GST*2	ECM*3					
HO2S2 (B1)	P0137	0137	×	2	×	A	EC-1354
HO2S2 (B1)	P0138	0138	×	2	×	A	EC-1363
HO2S2 (B1)	P0139	0139	×	2	×	A	EC-1375
A/F SENSOR1 (B2)	P0150	0150	—	2	×	A	EC-1321
A/F SENSOR1 (B2)	P0151	0151	—	2	×	B	EC-1329
A/F SENSOR1 (B2)	P0152	0152	—	2	×	B	EC-1337
A/F SENSOR1 (B2)	P0153	0153	×	2	×	A	EC-1345
HO2S2 (B2)	P0157	0157	×	2	×	A	EC-1354
HO2S2 (B2)	P0158	0158	×	2	×	A	EC-1363
HO2S2 (B2)	P0159	0159	×	2	×	A	EC-1375
FUEL SYS-LEAN-B1	P0171	0171	—	2	×	B	EC-1385
FUEL SYS-RICH-B1	P0172	0172	—	2	×	B	EC-1394
FUEL SYS-LEAN-B2	P0174	0174	—	2	×	B	EC-1385
FUEL SYS-RICH-B2	P0175	0175	—	2	×	B	EC-1394
FTT SENSOR	P0181	0181	—	2	×	B	EC-1402
FTT SEN/CIRCUIT	P0182	0182	—	2	×	B	EC-1406
FTT SEN/CIRCUIT	P0183	0183	—	2	×	B	EC-1406
TP SEN 1/CIRC-B1	P0222	0222	—	1	×	B	EC-1410
TP SEN 1/CIRC-B1	P0223	0223	—	1	×	B	EC-1410
MULTI CYL MISFIRE	P0300	0300	—	1 or 2	×	B	EC-1415
CYL 1 MISFIRE	P0301	0301	—	1 or 2	×	B	EC-1415
CYL 2 MISFIRE	P0302	0302	—	1 or 2	×	B	EC-1415
CYL 3 MISFIRE	P0303	0303	—	1 or 2	×	B	EC-1415
CYL 4 MISFIRE	P0304	0304	—	1 or 2	×	B	EC-1415
KNOCK SEN/CIRC-B1	P0327	0327	—	2	—	—	EC-1421
KNOCK SEN/CIRC-B1	P0328	0328	—	2	—	—	EC-1421
CKP SEN/CIRCUIT	P0335	0335	—	2	×	B	EC-1425
CMP SEN/CIRC-B1	P0340	0340	—	2	×	B	EC-1431
TW CATALYST SYS-B1	P0420	0420	×	2	×	A	EC-1437
TW CATALYST SYS-B2	P0430	0430	×	2	×	A	EC-1437
EVAP PURG FLOW/MON	P0441	0441	×	2	×	A	EC-1442
EVAP SMALL LEAK	P0442	0442	×	2	×	A	EC-1447
PURG VOLUME CONT/V	P0443	0443	—	2	×	A	EC-1454
PURG VOLUME CONT/V	P0444	0444	—	2	×	B	EC-1462
PURG VOLUME CONT/V	P0445	0445	—	2	×	B	EC-1462
VENT CONTROL VALVE	P0447	0447	—	2	×	B	EC-1468
VENT CONTROL VALVE	P0448	0448	—	2	×	B	EC-1473
EVAP SYS PRES SEN	P0451	0451	—	2	×	A	EC-1479
EVAP SYS PRES SEN	P0452	0452	—	2	×	B	EC-1482
EVAP SYS PRES SEN	P0453	0453	—	2	×	B	EC-1489
EVAP GROSS LEAK	P0455	0455	—	2	×	A	EC-1497
EVAP VERY SML LEAK	P0456	0456	×*7	2	×	A	EC-1504

Items (CONSULT-III screen terms)	DTC*1		SRT code	Trip	MIL	Permanent DTC group*4	Reference
	CONSULT-III GST*2	ECM*3					
FUEL LEV SEN SLOSH	P0460	0460	—	2	×	A	EC-1512
FUEL LEVEL SENSOR	P0461	0461	—	2	×	B	EC-1514
FUEL LEVL SEN/CIRC	P0462	0462	—	2	×	B	EC-1516
FUEL LEVL SEN/CIRC	P0463	0463	—	2	×	B	EC-1516
VEH SPEED SEN/CIRC*8	P0500	0500	—	2	×	B	EC-1518
ISC SYSTEM	P0506	0506	—	2	×	B	EC-1520
ISC SYSTEM	P0507	0507	—	2	×	B	EC-1522
ECM BACK UP/CIRCUIT	P0603	0603	—	2	×	B	EC-1524
ECM	P0605	0605	—	1 or 2	— or ×	B	EC-1527
ECM	P0607	0607	—	1 (CVT) 2 (M/T)	× (CVT) — (M/T)	B	EC-1529
SENSOR POWER/CIRC	P0643	0643	—	1	×	B	EC-1530
T/M RANGE SENSOR A	P0705	0705	—	2	×	B	CVT-60
FLUID TEMP SENSOR A*9	P0710	0710	—	1	×	B	CVT-65
INPUT SPEED SENSOR A	P0715	0715	—	2	×	B	CVT-70
OUTPUT SPEED SENSOR*8	P0720	0720	—	2	×	B	CVT-75
TORQUE CONVERTER	P0740	0740	—	2	×	B	CVT-83
TORQUE CONVERTER	P0744	0744	—	2	×	B	CVT-88
PC SOLENOID A	P0745	0745	—	2	×	B	CVT-90
PC SOLENOID A	P0746	0746	—	1	×	B	CVT-95
PC SOLENOID B	P0776	0776	—	2	×	B	CVT-97
PC SOLENOID B	P0778	0778	—	2	×	B	CVT-99
FLUID PRESS SEN/SW A	P0840	0840	—	2	×	B	CVT-109
P-N POS SW/CIRCUIT	P0850	0850	—	2	×	B	EC-1535
CLOSED LOOP-B1	P1148	1148	—	1	×	A	EC-1541
CLOSED LOOP-B2	P1168	1168	—	1	×	A	EC-1541
TCS/CIRC	P1212	1212	—	2	—	—	EC-1542
ENG OVER TEMP	P1217	1217	—	1	×	B	EC-1543
CTP LEARNING-B1	P1225	1225	—	2	—	—	EC-1555
CTP LEARNING-B1	P1226	1226	—	2	—	—	EC-1557
COLD START CONTROL	P1421	1421	—	2	×	A	EC-1559
ASCD SW	P1564	1564	—	1	—	—	EC-1561
ASCD BRAKE SW	P1572	1572	—	1	—	—	EC-1567
ASCD VHL SPD SEN	P1574	1574	—	1	—	—	EC-1576
LOCK MODE	P1610	1610	—	2	—	—	BL-170
ID DISCORD, IMM-ECM	P1611	1611	—	2	—	—	BL-170
CHAIN OF ECM-IMMU	P1612	1612	—	2	—	—	BL-170
CHAIN OF IMMU-KEY	P1614	1614	—	2	—	—	BL-170
DIFFERENCE OF KEY	P1615	1615	—	2	—	—	BL-170
IN PULY SPEED	P1715	1715	—	2	—	—	EC-1578
SLCT SOLENOID	P1740	1740	—	2	×	B	CVT-128
STEP MOTOR	P1777	1777	—	1	×	B	CVT-134

Items (CONSULT-III screen terms)	DTC*1		SRT code	Trip	MIL	Permanent DTC group*4	Reference
	CONSULT-III GST*2	ECM*3					
STEP MOTOR	P1778	1778	—	2	×	B	CVT-138
BRAKE SW/CIRCUIT	P1805	1805	—	2	—	—	EC-1580
ETC MOT PWR-B1	P2100	2100	—	1	×	B	EC-1584
ETC FUNCTION/CIRC-B1	P2101	2101	—	1	×	B	EC-1588
ETC MOT PWR	P2103	2103	—	1	×	B	EC-1584
ETC MOT-B1	P2118	2118	—	1	×	B	EC-1594
ETC ACTR-B1	P2119	2119	—	1	×	B	EC-1599
APP SEN 1/CIRC	P2122	2122	—	1	×	B	EC-1601
APP SEN 1/CIRC	P2123	2123	—	1	×	B	EC-1601
APP SEN 2/CIRC	P2127	2127	—	1	×	B	EC-1606
APP SEN 2/CIRC	P2128	2128	—	1	×	B	EC-1606
TP SENSOR-B1	P2135	2135	—	1	×	B	EC-1613
APP SENSOR	P2138	2138	—	1	×	B	EC-1618
A/F SENSOR1 (B1)	P2A00	2A00	—	2	×	A	EC-1625
A/F SENSOR1 (B2)	P2A03	2A03	—	2	×	A	EC-1625

*1: 1st trip DTC No. is the same as DTC No.

*2: This number is prescribed by SAE J2012/ISO 15031-6.

*3: In Diagnostic Test Mode II (Self-diagnostic results), this number is controlled by NISSAN.

*4: Refer to EC-1155, "Emission-related Diagnostic Information", “PERMANENT DIAGNOSTIC TROUBLE CODE (PERMANENT DTC)”.

*5: The troubleshooting for this DTC needs CONSULT-III.

*6: When the ECM in the mode that displays SRT status, MIL may flash. For the details, refer to “How to Display SRT Status”.

*7: SRT code will not be set if the self-diagnostic result is NG.

*8: When the fail-safe operations for both self-diagnoses occur, the MIL illuminates.

*9: When erasing this DTC, always use CONSULT-III or GST.

DTC AND 1ST TRIP DTC

The 1st trip DTC (whose number is the same as the DTC number) is displayed for the latest self-diagnostic result obtained. If the ECM memory was cleared previously, and the 1st trip DTC did not reoccur, the 1st trip DTC will not be displayed.

If a malfunction is detected during the 1st trip, the 1st trip DTC is stored in the ECM memory. The MIL will not illuminate (two trip detection logic). If the same malfunction is not detected in the 2nd trip (meeting the required driving pattern), the 1st trip DTC is cleared from the ECM memory. If the same malfunction is detected in the 2nd trip, both the 1st trip DTC and DTC are stored in the ECM memory and the MIL illuminates. In other words, the DTC is stored in the ECM memory and the MIL illuminates when the same malfunction occurs in two consecutive trips. If a 1st trip DTC is stored and a non-diagnostic operation is performed between the 1st and 2nd trips, only the 1st trip DTC will continue to be stored. For malfunctions that blink or illuminate the MIL during the 1st trip, the DTC and 1st trip DTC are stored in the ECM memory.

Procedures for clearing the DTC and the 1st trip DTC from the ECM memory are described in “HOW TO ERASE EMISSION-RELATED DIAGNOSTIC INFORMATION”.

For malfunctions in which 1st trip DTCs are displayed, refer to “EMISSION-RELATED DIAGNOSTIC INFORMATION ITEMS”. These items are required by legal regulations to continuously monitor the system/component. In addition, the items monitored non-continuously are also displayed on CONSULT-III.

1st trip DTC is specified in Service $07 of SAE J1979/ISO 15031-5. 1st trip DTC detection occurs without illuminating the MIL and therefore does not warn the driver of a malfunction. However, 1st trip DTC detection will not prevent the vehicle from being tested, for example during Inspection/Maintenance (I/M) tests.

When a 1st trip DTC is detected, check, print out or write down and erase (1st trip) DTC and Freeze Frame data as specified in Work Flow procedure Step 2, refer to EC-1197, "Trouble Diagnosis Introduction". Then perform DTC Confirmation Procedure or Overall Function Check to try to duplicate the malfunction. If the malfunction is duplicated, the item requires repair.

How to Read DTC and 1st Trip DTC

DTC and 1st trip DTC can be read by the following methods.

WITH CONSULT-III

WITH GST

CONSULT-III or GST (Generic Scan Tool) Examples: P0340, P0850, P1148, etc.
These DTCs are prescribed by SAE J2012/ISO 15031-6.
(CONSULT-III also displays the malfunctioning component or system.)

NO TOOLS

The number of blinks of the MIL in the Diagnostic Test Mode II (Self-Diagnostic Results) indicates the DTC.
Example: 0340, 0850, 1148, etc.
These DTCs are controlled by NISSAN.

- **1st trip DTC No. is the same as DTC No.**
- **Output of a DTC indicates a malfunction. However, GST and the Diagnostic Test Mode II do not indicate whether the malfunction is still occurring or has occurred in the past and has returned to normal. CONSULT-III can identify malfunction status as shown below. Therefore, using CONSULT-III (if available) is recommended.**

DTC or 1st trip DTC of a malfunction is displayed in SELF-DIAGNOSTIC RESULTS mode of CONSULT-III.
Time data indicates how many times the vehicle was driven after the last detection of a DTC.
If the DTC is being detected currently, the time data will be [0].
If a 1st trip DTC is stored in the ECM, the time data will be [1t].

FREEZE FRAME DATA AND 1ST TRIP FREEZE FRAME DATA

The ECM records the driving conditions such as fuel system status, calculated load value, engine coolant temperature, short-term fuel trim, long-term fuel trim, engine speed, vehicle speed, absolute throttle position, base fuel schedule and intake air temperature at the moment a malfunction is detected.
Data which are stored in the ECM memory, along with the 1st trip DTC, are called 1st trip freeze frame data. The data, stored together with the DTC data, are called freeze frame data and displayed on CONSULT-III or GST. The 1st trip freeze frame data can only be displayed on the CONSULT-III screen, not on the GST. For details, see EC-1224, "CONSULT-III Function (ENGINE)".
Only one set of freeze frame data (either 1st trip freeze frame data or freeze frame data) can be stored in the ECM. 1st trip freeze frame data is stored in the ECM memory along with the 1st trip DTC. There is no priority for 1st trip freeze frame data and it is updated each time a different 1st trip DTC is detected. However, once freeze frame data (2nd trip detection/MIL on) is stored in the ECM memory, 1st trip freeze frame data is no longer stored. Remember, only one set of freeze frame data can be stored in the ECM. The ECM has the following priorities to update the data.

Priority	Items	
1	Freeze frame data	Misfire — DTC: P0300 - P0304 Fuel Injection System Function — DTC: P0171, P0172, P0174, P0175
2		Except the above items (Includes CVT related items)
3	1st trip freeze frame data	

For example, the EGR malfunction (Priority: 2) was detected and the freeze frame data was stored in the 2nd trip. After that when the misfire (Priority: 1) is detected in another trip, the freeze frame data will be updated from the EGR malfunction to the misfire. The 1st trip freeze frame data is updated each time a different malfunction is detected. There is no priority for 1st trip freeze frame data. However, once freeze frame data is stored in the ECM memory, 1st trip freeze data is no longer stored (because only one freeze frame data or 1st trip freeze frame data can be stored in the ECM). If freeze frame data is stored in the ECM memory and freeze frame data with the same priority occurs later, the first (original) freeze frame data remains unchanged in the ECM memory.
Both 1st trip freeze frame data and freeze frame data (along with the DTCs) are cleared when the ECM memory is erased. Procedures for clearing the ECM memory are described in “EMISSION-RELATED DIAGNOSTIC INFORMATION ITEMS”.

SYSTEM READINESS TEST (SRT) CODE

System Readiness Test (SRT) code is specified in Service $01 of SAE J1979/ISO 15031-5.
As part of an enhanced emissions test for Inspection & Maintenance (I/M), certain states require the status of SRT be used to indicate whether the ECM has completed self-diagnosis of major emission systems and components. Completion must be verified in order for the emissions inspection to proceed.
If a vehicle is rejected for a State emissions inspection due to one or more SRT items indicating “INCMP”, use the information in this Service Manual to set the SRT to “CMPLT”.

In most cases the ECM will automatically complete its self-diagnosis cycle during normal usage, and the SRT status will indicate “CMPLT” for each application system. Once set as “CMPLT”, the SRT status remains “CMPLT” until the self-diagnosis memory is erased.
Occasionally, certain portions of the self-diagnostic test may not be completed as a result of the customer's normal driving pattern; the SRT will indicate “INCMP” for these items.

NOTE:
The SRT will also indicate “INCMP” if the self-diagnosis memory is erased for any reason or if the ECM memory power supply is interrupted for several hours.
If, during the state emissions inspection, the SRT indicates “CMPLT” for all test items, the inspector will continue with the emissions test. However, if the SRT indicates “INCMP” for one or more of the SRT items the vehicle is returned to the customer untested.

NOTE:
If permanent DTC is stored or MIL illuminates during the state emissions inspection, the vehicle is also returned to the customer untested even though the SRT indicates “CMPLT” for all test items. Therefore, it is important to check SRT (“CMPLT”), DTC (No DTCs) and permanent DTC (No permanent DTCs) before the inspection.

SRT Item
The table below shows required self-diagnostic items to set the SRT to “CMPLT”.

SRT item (CONSULT-III indication)	Performance Priority*	Required self-diagnostic items to set the SRT to “CMPLT”	Corresponding DTC No.
CATALYST	2	Three way catalyst function	P0420, P0430
EVAP SYSTEM	2	EVAP control system purge flow monitoring	P0441
	1	EVAP control system	P0442
	2	EVAP control system	P0456
HO2S	2	Air fuel ratio (A/F) sensor 1	P0133, P0153
		Heated oxygen sensor 2	P0137, P0157
		Heated oxygen sensor 2	P0138, P0158
		Heated oxygen sensor 2	P0139, P0159
EGR/VVT SYSTEM	3	Intake value timing control function	P0011

*: If completion of several SRTs is required, perform driving patterns (DTC confirmation procedure), one by one based on the priority for models with CONSULT-III.

SRT Set Timing
SRT is set as “CMPLT” after self-diagnosis has been performed one or more times. Completion of SRT is done regardless of whether the result is OK or NG. The set timing is different between OK and NG results and is shown in the table below.

Self-diagnosis result		Example				
		Diagnosis	Ignition cycle			
			← ON → OFF	← ON → OFF	← ON → OFF	← ON →
All OK	Case 1	P0400	OK (1)	— (1)	OK (2)	— (2)
		P0402	OK (1)	— (1)	— (1)	OK (2)
		P1402	OK (1)	OK (2)	— (2)	— (2)
		SRT of EGR	“CMPLT”	“CMPLT”	“CMPLT”	“CMPLT”
	Case 2	P0400	OK (1)	— (1)	— (1)	— (1)
		P0402	— (0)	— (0)	OK (1)	— (1)
		P1402	OK (1)	OK (2)	— (2)	— (2)
		SRT of EGR	“INCMP”	“INCMP”	“CMPLT”	“CMPLT”

NG exists	Case 3	P0400	OK	OK	—	—
		P0402	—	—	—	—
		P1402	NG	—	NG	NG (Consecutive NG)
		(1st trip) DTC	1st trip DTC	—	1st trip DTC	DTC (= MIL “ON”)
		SRT of EGR	“INCMP”	“INCMP”	“INCMP”	“CMPLT”

OK: Self-diagnosis is carried out and the result is OK.

NG: Self-diagnosis is carried out and the result is NG.

—: Self-diagnosis is not carried out.

When all SRT related self-diagnoses showed OK results in a single cycle (Ignition OFF-ON-OFF), the SRT will indicate “CMPLT”. → Case 1 above

When all SRT related self-diagnoses showed OK results through several different cycles, the SRT will indicate “CMPLT” at the time the respective self-diagnoses have at least one OK result. → Case 2 above

If one or more SRT related self-diagnoses showed NG results in 2 consecutive cycles, the SRT will also indicate “CMPLT”. → Case 3 above

The table above shows that the minimum number of cycles for setting SRT as “INCMP” is one (1) for each self-diagnosis (Case 1 & 2) or two (2) for one of self-diagnoses (Case 3). However, in preparation for the state emissions inspection, it is unnecessary for each self-diagnosis to be executed twice (Case 3) for the following reasons:

- The SRT will indicate “CMPLT” at the time the respective self-diagnoses have one (1) OK result.
- The emissions inspection requires “CMPLT” of the SRT only with OK self-diagnosis results.
- When, during SRT driving pattern, 1st trip DTC (NG) is detected prior to “CMPLT” of SRT, the self-diagnosis memory must be erased from ECM after repair.
- If the 1st trip DTC is erased, all the SRT will indicate “INCMP”.

  NOTE:
  SRT can be set as “CMPLT” together with the DTC(s). Therefore, DTC check must always be carried out prior to the state emission inspection even though the SRT indicates “CMPLT”.

SRT Service Procedure

If a vehicle has failed the state emissions inspection due to one or more SRT items indicating “INCMP”, review the flowchart diagnostic sequence on the next page.

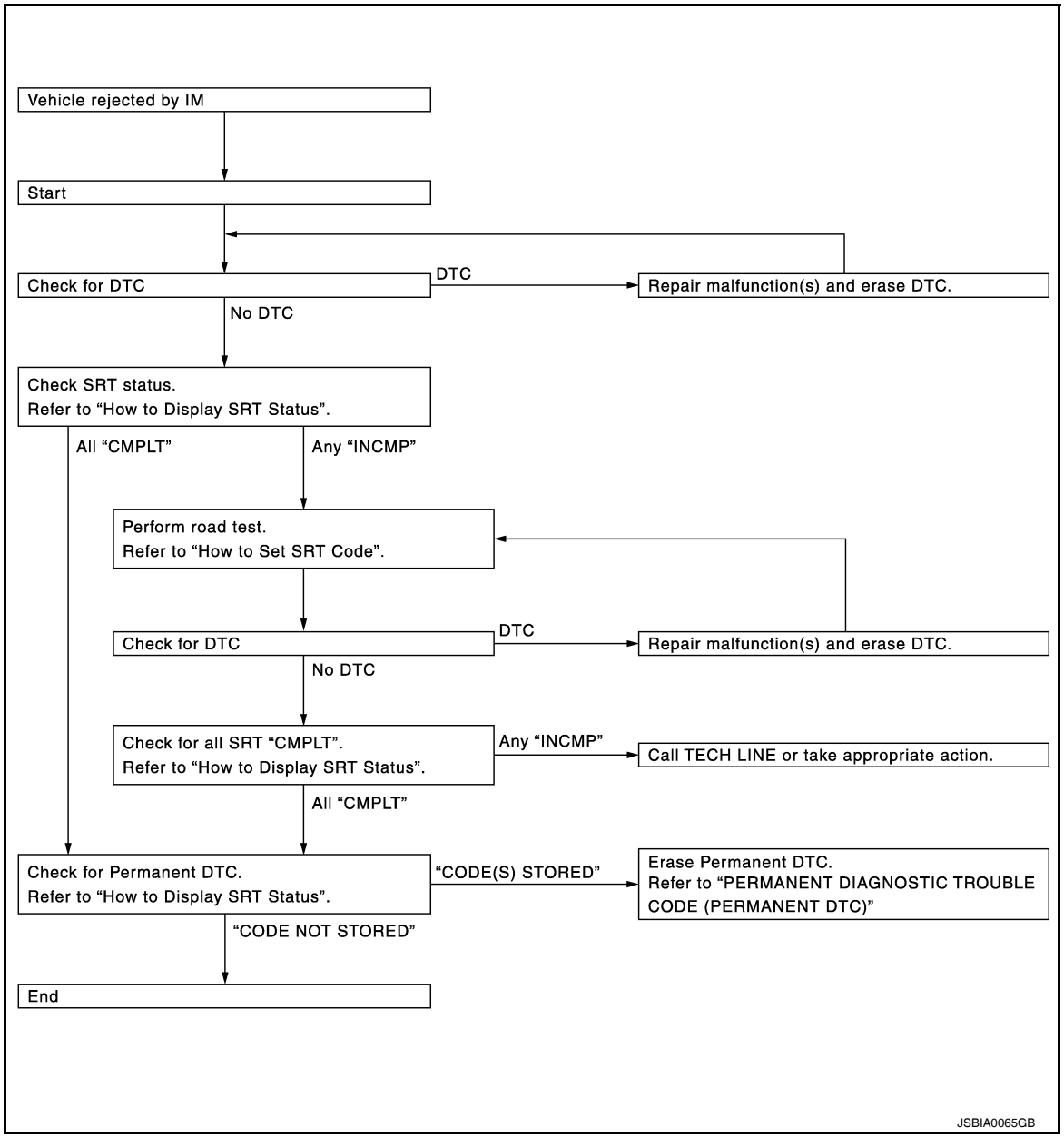

How to Display SRT Status

WITH CONSULT-III

Selecting “SRT STATUS” in “DTC CONFIRMATION” mode with CONSULT-III.

For items whose SRT codes are set, “CMPLT” is displayed on the CONSULT-III screen; for items whose SRT codes are not set, “INCMP” is displayed.

NOTE:

- Though displayed on the CONSULT-III screen, “HO2S HTR” is not SRT item.
- “SRT STATUS” provides the presence or absence of permanent DTCs stored in ECM memory.

WITH GST

Selecting Service $01 with GST (Generic Scan Tool)

NO TOOLS

A SRT code itself cannot be displayed, however SRT status can.

1. Turn ignition switch ON and wait 20 seconds.
2. SRT status is indicated as shown below.
   - When all SRT codes are set, MIL illuminates continuously.

- When any SRT codes are not set, MIL will blink periodically for 10 seconds.

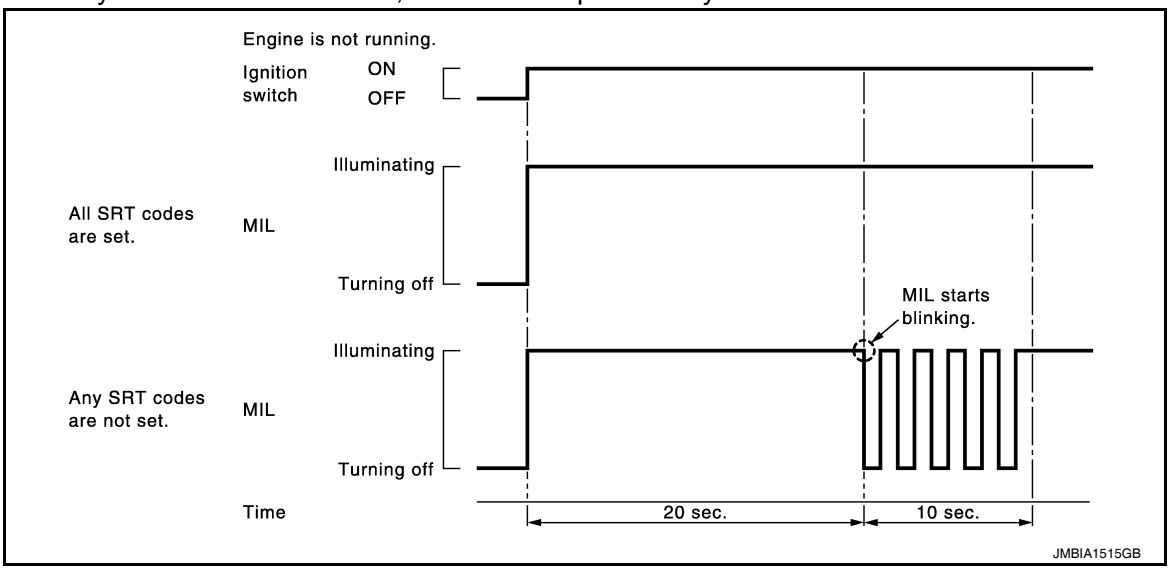

How to Set SRT Code

To set all SRT codes, self-diagnosis for the items indicated above must be performed one or more times. Each diagnosis may require a long period of actual driving under various conditions.

WITH CONSULT-III

Perform corresponding DTC Confirmation Procedure one by one based on Performance Priority in the table on “SRT Item”.

WITHOUT CONSULT-III

The most efficient driving pattern in which SRT codes can be properly set is explained below. The driving pattern should be performed one or more times to set all SRT codes.

Driving Pattern

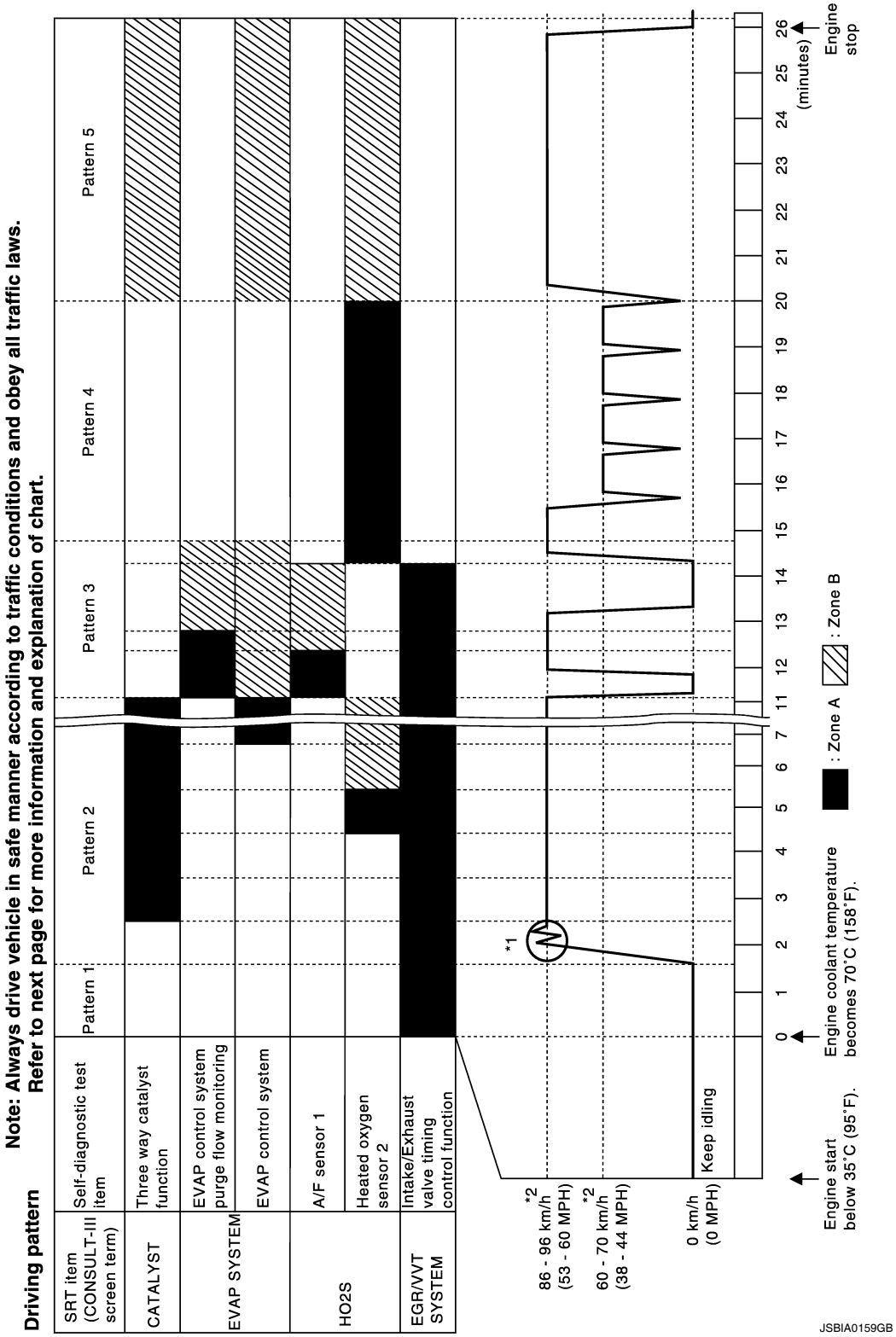

- The time required for each diagnosis varies with road surface conditions, weather, altitude, individual driving habits, etc.
  Zone A refers to the range where the time, required for the diagnosis under normal conditions*, is the shortest.
  Zone B refers to the range where the diagnosis can still be performed if the diagnosis is not completed within zone A.

*: Normal conditions refer to the following:

- Sea level
- Flat road
- Ambient air temperature: 20 - 30°C (68 - 86°F)
- Diagnosis is performed as quickly as possible under normal conditions.
  Under different conditions [For example: ambient air temperature other than 20 - 30°C (68 - 86°F)], diagnosis may also be performed.

Pattern 1:

- **The engine is started at the engine coolant temperature of −10 to 35°C (14 to 95°F) (where the voltage between the ECM terminal 46 and ground is 3.0 - 4.3 V).**
- **The engine must be operated at idle speed until the engine coolant temperature is greater than 70°C (158°F) (where the voltage between the ECM terminal 46 and ground is lower than 1.4 V).**
- **The engine is started at the fuel tank temperature of warmer than 0°C (32°F) (where the voltage between the ECM terminal 95 and ground is less than 4.1 V).**

Pattern 2:

- When steady-state driving is performed again even after it is interrupted, each diagnosis can be conducted. In this case, the time required for diagnosis may be extended.

Pattern 3:

- Operate vehicle following the driving pattern shown in the figure.
- Release the accelerator pedal during deceleration of vehicle speed from 90 km/h (56 MPH) to 0 km/h (0 MPH).

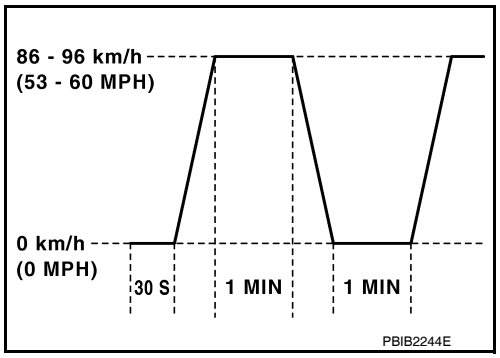

Pattern 4:

- Operate vehicle, following the driving pattern shown in the figure.
- Drive the vehicle in a proper gear at 60 km/h (38 MPH) and maintain the speed.
- Release the accelerator pedal fully at least 5 seconds.
- Repeat the above two steps at least 5 times.

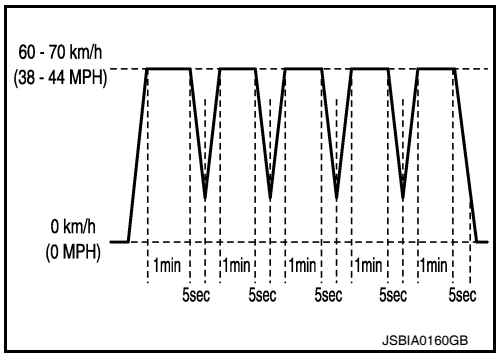

Pattern 5:

- The accelerator pedal must be held very steady during steady-state driving.
- If the accelerator pedal is moved, the test must be conducted again.

*1: Depress the accelerator pedal until vehicle speed is 90 km/h (56 MPH), then release the accelerator pedal and keep it released for more than 10 seconds. Depress the accelerator pedal until vehicle speed is 90 km/h (56 MPH) again.
*2: Checking the vehicle speed with GST is advised.

Suggested Transmission Gear Position for CVT Models
Set the selector lever position in the D.
Suggested upshift speeds for M/T models
Shown below are suggested vehicle speeds for shifting into a higher gear. These suggestions relate to fuel economy and vehicle performance. Actual upshift speeds will vary according to road conditions, the weather and individual driving habits.

	For normal acceleration in low altitude areas [less than 1,219 m (4,000 ft)]:	For quick acceleration in low altitude areas	For high attitude areas [over 1,219 m (4,000 ft)]:
Gear change	ACCEL shift point km/h (MPH)	km/h (MPH)	km/h (MPH)
1st to 2nd	13 (8)	24 (15)	24 (15)
2nd to 3rd	27 (17)	40 (25)	40 (25)
3rd to 4th	40 (25)	53 (33)	65 (40)
4th to 5th	58 (36)	71 (44)	72 (45)
5th to 6th	82 (51)	82 (51)	82 (51)

Suggested Maximum Speed in Each Gear

Downshift to a lower gear if the engine is not running smoothly, or if you need to accelerate.

Do not exceed the maximum suggested speed (shown below) in any gear. For level road driving, use the highest gear suggested for that speed. Always observe posted speed limits and drive according to the road conditions to ensure safe operation. Do not over-rev the engine when shifting to a lower gear as it may cause engine damage or loss of vehicle control.

Gear	km/h (MPH)
1st	50 (30)
2nd	90 (55)
3rd	—
4th	—
5th	—
6th	—

PERMANENT DIAGNOSTIC TROUBLE CODE (PERMANENT DTC)

Permanent DTC is defined in SAE J1979/ISO 15031-5 Service $0A.

ECM stores a DTC issuing a command of turning on MIL as a permanent DTC and keeps storing the DTC as a permanent DTC until ECM judges that there is no presence of malfunction.

Permanent DTCs cannot be erased by using the Erase function of CONSULT-III or Generic Scan Tool (GST) and by disconnecting the battery to shut off power to ECM. This prevents a vehicle from passing the state emission inspection without repairing a malfunctioning part.

When not passing the state emission inspection due to more than one permanent DTC, permanent DTCs should be erased, referring to this manual.

NOTE:

- The important items in state emission inspection are that MIL is not ON, SRT test items are set, and permanent DTCs are not included.
- Permanent DTCs do not apply for regions that permanent DTCs are not regulated by law.

Permanent DTC Item

For permanent DTC items, MIL turns ON. Refer to EC-1155, "Emission-related Diagnostic Information", “EMISSION-RELATED DIAGNOSTIC INFORMATION ITEMS”.

Permanent DTC Set Timing

The setting timing of permanent DTC is stored in ECM with the lighting of MIL when a DTC is confirmed.

Permanent DTC Service Procedure

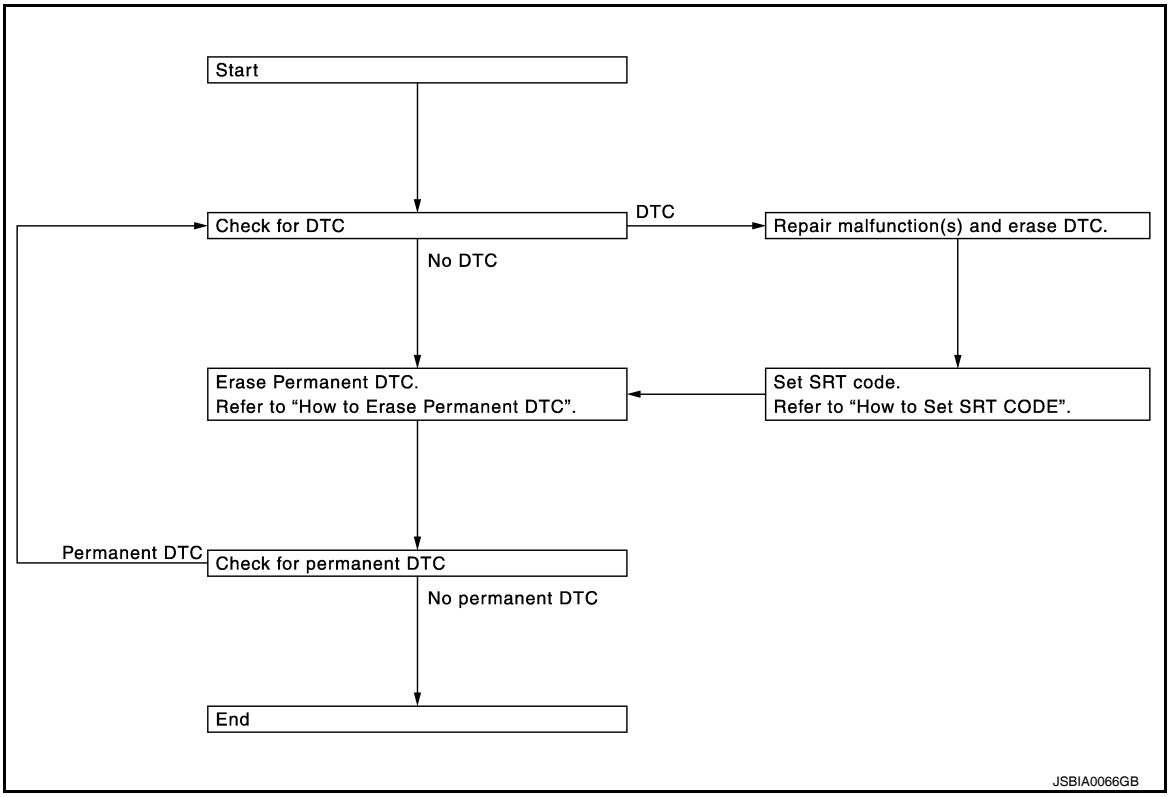

How to Display Permanent DTC Status

WITH CONSULT-III

1. Turn ignition switch OFF and wait at least 10 seconds.
2. Turn ignition switch ON.
3. Turn ignition switch OFF and wait at least 10 seconds.
4. Turn ignition switch ON.
5. Select "PERMANENT DTC STATUS" in "DTC & SRT CONFIRMATION" mode with CONSULT-III.

   NOTE:

   Permanent DTCs stored in ECM memory are displayed on the CONSULT-III screen to show if a driving pattern required for erasing permanent DTCs is complete (CMPLT) or incomplete (INCMP).

   CAUTION:

   Since the "PERMANENT DTC STATUS" screen displays the previous trip information, repeat the following twice to update the information: "Ignition switch OFF", "Wait for more than 10 seconds" and "Ignition switch ON".

PERMANENT DTC & SRT CONFIRMATION : PERMANENT DTC STATUS

CAUTION:
Turn ignition switch from ON to OFF twice to update the information on the status screen.

PERMANENT DTC	DRIVING PATTERN B	DRIVING PATTERN D
XXXX	INCMP	INCMP
XXXX	CMPLT	INCMP
XXXX	INCMP	CMPLT
XXXX	CMPLT	INCMP
XXXX	INCMP	INCMP
XXXX	INCMP	INCMP

The previous trip information is displayed.

JSBIA0062GB

WITH GST

1. Turn ignition switch OFF and wait at least 10 seconds.
2. Turn ignition switch ON.
3. Turn ignition switch OFF and wait at least 10 seconds.
4. Turn ignition switch ON.
5. Select Service $0A with GST (Generic Scan Tool).

TEST VALUE AND TEST LIMIT (GST ONLY — NOT APPLICABLE TO CONSULT-III)

The following is the information specified in Service $06 of SAE J1979/ISO 15031-5.

The test value is a parameter used to determine whether a system/circuit diagnostic test is OK or NG while being monitored by the ECM during self-diagnosis. The test limit is a reference value which is specified as the maximum or minimum value and is compared with the test value being monitored.

These data (test value and test limit) are specified by On Board Monitor ID (OBDMID), Test ID (TID), Unit and Scaling ID and can be displayed on the GST screen.

The items of the test value and test limit will be displayed with GST screen which items are provided by the ECM. (eg., if bank 2 is not applied on this vehicle, only the items of bank 1 is displayed)

Item	OBD-MID	Self-diagnostic test item	DTC	Test value and Test limit (GST display)		Description
				TID	Unit and Scaling ID	
HO2S	01H	Air fuel ratio (A/F) sensor 1 (Bank 1)	P0131	83H	0BH	Minimum sensor output voltage for test cycle
			P0131	84H	0BH	Maximum sensor output voltage for test cycle
			P0130	85H	0BH	Minimum sensor output voltage for test cycle
			P0130	86H	0BH	Maximum sensor output voltage for test cycle
			P0133	87H	04H	Response rate: Response ratio (Lean to Rich)
			P0133	88H	04H	Response rate: Response ratio (Rich to Lean)
			P2A00	89H	84H	The amount of shift in air fuel ratio
			P2A00	8AH	84H	The amount of shift in air fuel ratio
			P0130	8BH	0BH	Difference in sensor output voltage
			P0133	8CH	83H	Response gain at the limited frequency
			P014C	8DH	04H	O2 Sensor Slow Response - Rich to Lean Bank 1 Sensor 1
			P014C	8EH	04H	O2 Sensor Slow Response - Rich to Lean Bank 1 Sensor 1
			P014D	8FH	84H	O2 Sensor Slow Response - Lean to Rich Bank 1 Sensor 1
			P014D	90H	84H	O2 Sensor Slow Response - Lean to Rich Bank 1 Sensor 1
			P015A	91H	01H	O2 Sensor Delayed Response - Rich to Lean Bank 1 Sensor 1
			P015A	92H	01H	O2 Sensor Delayed Response - Rich to Lean Bank 1 Sensor 1
			P015B	93H	01H	O2 Sensor Delayed Response - Lean to Rich Bank 1 Sensor 1
			P015B	94H	01H	O2 Sensor Delayed Response - Lean to Rich Bank 1 Sensor 1
	02H	Heated oxygen sensor 2 (Bank 1)	P0138	07H	0CH	Minimum sensor output voltage for test cycle
			P0137	08H	0CH	Maximum sensor output voltage for test cycle
			P0138	80H	0CH	Sensor output voltage
			P0139	81H	0CH	Difference in sensor output voltage
	03H	Heated oxygen sensor 3 (Bank 1)	P0143	07H	0CH	Minimum sensor output voltage for test cycle
			P0144	08H	0CH	Maximum sensor output voltage for test cycle
			P0146	80H	0CH	Sensor output voltage
			P0145	81H	0CH	Difference in sensor output voltage

Item	OBD-MID	Self-diagnostic test item	DTC	Test value and Test limit (GST display)		Description
				TID	Unit and Scaling ID	
HO2S	05H	Air fuel ratio (A/F) sensor 1 (Bank 2)	P0151	83H	0BH	Minimum sensor output voltage for test cycle
			P0151	84H	0BH	Maximum sensor output voltage for test cycle
			P0150	85H	0BH	Minimum sensor output voltage for test cycle
			P0150	86H	0BH	Maximum sensor output voltage for test cycle
			P0153	87H	04H	Response rate: Response ratio (Lean to Rich)
			P0153	88H	04H	Response rate: Response ratio (Rich to Lean)
			P2A03	89H	84H	The amount of shift in air fuel ratio
			P2A03	8AH	84H	The amount of shift in air fuel ratio
			P0150	8BH	0BH	Difference in sensor output voltage
			P0153	8CH	83H	Response gain at the limited frequency
			P014E	8DH	04H	O2 Sensor Slow Response - Rich to Lean Bank 2 Sensor 1
			P014E	8EH	04H	O2 Sensor Slow Response - Rich to Lean Bank 2 Sensor 1
			P014F	8FH	84H	O2 Sensor Slow Response - Lean to Rich Bank 2 Sensor 1
			P014F	90H	84H	O2 Sensor Slow Response - Lean to Rich Bank 2 Sensor 1
			P015C	91H	01H	O2 Sensor Delayed Response - Rich to Lean Bank 2 Sensor 1
			P015C	92H	01H	O2 Sensor Delayed Response - Rich to Lean Bank 2 Sensor 1
			P015D	93H	01H	O2 Sensor Delayed Response - Lean to Rich Bank 2 Sensor 1
			P015D	94H	01H	O2 Sensor Delayed Response - Lean to Rich Bank 2 Sensor 1
	06H	Heated oxygen sensor 2 (Bank 2)	P0158	07H	0CH	Minimum sensor output voltage for test cycle
			P0157	08H	0CH	Maximum sensor output voltage for test cycle
			P0158	80H	0CH	Sensor output voltage
			P0159	81H	0CH	Difference in sensor output voltage
	07H	Heated oxygen sensor 3 (Bank2)	P0163	07H	0CH	Minimum sensor output voltage for test cycle
			P0164	08H	0CH	Maximum sensor output voltage for test cycle
			P0166	80H	0CH	Sensor output voltage
			P0165	81H	0CH	Difference in sensor output voltage

Item	OBD-MID	Self-diagnostic test item	DTC	Test value and Test limit (GST display)		Description
				TID	Unit and Scaling ID	
CATA-LYST	21H	Three way catalyst function (Bank1)	P0420	80H	01H	O2 storage index
			P0420	82H	01H	Switching time lag engine exhaust index value
			P2423	83H	0CH	Difference in 3rd O2 sensor output voltage
			P2423	84H	84H	O2 storage index in HC trap catalyst
	22H	Three way catalyst function (Bank2)	P0430	80H	01H	O2 storage index
			P0430	82H	01H	Switching time lag engine exhaust index value
			P2424	83H	0CH	Difference in 3rd O2 sensor output voltage
			P2424	84H	84H	O2 storage index in HC trap catalyst
EGR SYSTEM	31H	EGR function	P0400	80H	96H	Low Flow Faults: EGR temp change rate (short term)
			P0400	81H	96H	Low Flow Faults: EGR temp change rate (long term)
			P0400	82H	96H	Low Flow Faults: Difference between max EGR temp and EGR temp under idling condition
			P0400	83H	96H	Low Flow Faults: Max EGR temp
			P1402	84H	96H	High Flow Faults: EGR temp increase rate
VVT SYSTEM	35H	VVT Monitor (Bank1)	P0011	80H	9DH	VTC intake function diagnosis (VTC alignment check diagnosis)
			P0014	81H	9DH	VTC exhaust function diagnosis (VTC alignment check diagnosis)
			P0011	82H	9DH	VTC intake function diagnosis (VTC drive failure diagnosis)
			P0014	83H	9DH	VTC exhaust function diagnosis (VTC drive failure diagnosis)
	36H	VVT Monitor (Bank2)	P0021	80H	9DH	VTC intake function diagnosis (VTC alignment check diagnosis)
			P0024	81H	9DH	VTC exhaust function diagnosis (VTC alignment check diagnosis)
			P0021	82H	9DH	VTC intake function diagnosis (VTC drive failure diagnosis)
			P0024	83H	9DH	VTC exhaust function diagnosis (VTC drive failure diagnosis)

Item	OBD-MID	Self-diagnostic test item	DTC	Test value and Test limit (GST display)		Description
				TID	Unit and Scaling ID	
EVAP SYSTEM	39H	EVAP control system leak (Cap Off)	P0455	80H	0CH	Difference in pressure sensor output voltage before and after pull down
	3BH	EVAP control system leak (Small leak)	P0442	80H	05H	Leak area index (for more than 0.04 inch)
	3CH	EVAP control system leak (Very small leak)	P0456	80H	05H	Leak area index (for more than 0.02 inch)
			P0456	81H	FDH	Maximum internal pressure of EVAP system during monitoring
			P0456	82H	FDH	Internal pressure of EVAP system at the end of monitoring
	3DH	Purge flow system	P0441	83H	0CH	Difference in pressure sensor output voltage before and after vent control valve close
O2 SENSOR HEATER	41H	A/F sensor 1 heater (Bank 1)	Low Input:P0031 High Input:P0032	81H	0BH	Converted value of Heater electric current to voltage
	42H	Heated oxygen sensor 2 heater (Bank 1)	Low Input:P0037 High Input:P0038	80H	0CH	Converted value of Heater electric current to voltage
	43H	Heated oxygen sensor 3 heater (Bank 1)	P0043	80H	0CH	Converted value of Heater electric current to voltage
	45H	A/F sensor 1 heater (Bank 2)	Low Input:P0051 High Input:P0052	81H	0BH	Converted value of Heater electric current to voltage
	46H	Heated oxygen sensor 2 heater (Bank 2)	Low Input:P0057 High Input:P0058	80H	0CH	Converted value of Heater electric current to voltage
	47H	Heated oxygen sensor 3 heater (Bank 2)	P0063	80H	0CH	Converted value of Heater electric current to voltage
Secondary Air	71H	Secondary Air system	P0411	80H	01H	Secondary Air Injection System Incorrect Flow Detected
			Bank1: P0491 Bank2: P0492	81H	01H	Secondary Air Injection System Insufficient Flow
			P2445	82H	01H	Secondary Air Injection System Pump Stuck Off
			P2448	83H	01H	Secondary Air Injection System High Airflow
			Bank1: P2440 Bank2: P2442	84H	01H	Secondary Air Injection System Switching Valve Stuck Open
			P2440	85H	01H	Secondary Air Injection System Switching Valve Stuck Open
			P2444	86H	01H	Secondary Air Injection System Pump Stuck On
FUEL SYSTEM	81H	Fuel injection system function (Bank 1)	P0171 or P0172	80H	2FH	Long term fuel trim
			P0171 or P0172	81H	24H	The number of lambda control clamped
	82H	Fuel injection system function (Bank 2)	P0174 or P0175	80H	2FH	Long term fuel trim
			P0174 or P0175	81H	24H	The number of lambda control clamped

Item	OBD-MID	Self-diagnostic test item	DTC	Test value and Test limit (GST display)		Description
				TID	Unit and Scaling ID	
MISFIRE	A1H	Multiple Cylinder Misfires	P0301	80H	24H	Misfiring counter at 1000 revolution of the first cylinder
			P0302	81H	24H	Misfiring counter at 1000 revolution of the second cylinder
			P0303	82H	24H	Misfiring counter at 1000 revolution of the third cylinder
			P0304	83H	24H	Misfiring counter at 1000 revolution of the fourth cylinder
			P0305	84H	24H	Misfiring counter at 1000 revolution of the fifth cylinder
			P0306	85H	24H	Misfiring counter at 1000 revolution of the sixth cylinder
			P0307	86H	24H	Misfiring counter at 1000 revolution of the seventh cylinder
			P0308	87H	24H	Misfiring counter at 1000 revolution of the eighth cylinder
			P0300	88H	24H	Misfiring counter at 1000 revolution of the multiple cylinders
			P0301	89H	24H	Misfiring counter at 200 revolution of the first cylinder
			P0302	8AH	24H	Misfiring counter at 200 revolution of the second cylinder
			P0303	8BH	24H	Misfiring counter at 200 revolution of the third cylinder
			P0304	8CH	24H	Misfiring counter at 200 revolution of the fourth cylinder
			P0305	8DH	24H	Misfiring counter at 200 revolution of the fifth cylinder
			P0306	8EH	24H	Misfiring counter at 200 revolution of the sixth cylinder
			P0307	8FH	24H	Misfiring counter at 200 revolution of the seventh cylinder
			P0308	90H	24H	Misfiring counter at 200 revolution of the eighth cylinder
			P0300	91H	24H	Misfiring counter at 1000 revolution of the single cylinder
			P0300	92H	24H	Misfiring counter at 200 revolution of the single cylinder
			P0300	93H	24H	Misfiring counter at 200 revolution of the multiple cylinders

Item	OBD-MID	Self-diagnostic test item	DTC	Test value and Test limit (GST display)		Description
				TID	Unit and Scaling ID	
MISFIRE	A2H	No. 1 Cylinder Misfire	P0301	0BH	24H	EWMA (Exponential Weighted Moving Average) misfire counts for last 10 driving cycles
			P0301	0CH	24H	Misfire counts for last/current driving cycles
	A3H	No. 2 Cylinder Misfire	P0302	0BH	24H	EWMA (Exponential Weighted Moving Average) misfire counts for last 10 driving cycles
			P0302	0CH	24H	Misfire counts for last/current driving cycles
	A4H	No. 3 Cylinder Misfire	P0303	0BH	24H	EWMA (Exponential Weighted Moving Average) misfire counts for last 10 driving cycles
			P0303	0CH	24H	Misfire counts for last/current driving cycles
	A5H	No. 4 Cylinder Misfire	P0304	0BH	24H	EWMA (Exponential Weighted Moving Average) misfire counts for last 10 driving cycles
			P0304	0CH	24H	Misfire counts for last/current driving cycles
	A6H	No. 5 Cylinder Misfire	P0305	0BH	24H	EWMA (Exponential Weighted Moving Average) misfire counts for last 10 driving cycles
			P0305	0CH	24H	Misfire counts for last/current driving cycles
	A7H	No. 6 Cylinder Misfire	P0306	0BH	24H	EWMA (Exponential Weighted Moving Average) misfire counts for last 10 driving cycles
			P0306	0CH	24H	Misfire counts for last/current driving cycles
	A8H	No. 7 Cylinder Misfire	P0307	0BH	24H	EWMA (Exponential Weighted Moving Average) misfire counts for last 10 driving cycles
			P0307	0CH	24H	Misfire counts for last/current driving cycles
	A9H	No. 8 Cylinder Misfire	P0308	0BH	24H	EWMA (Exponential Weighted Moving Average) misfire counts for last 10 driving cycles
			P0308	0CH	24H	Misfire counts for last/current driving cycles

HOW TO ERASE EMISSION-RELATED DIAGNOSTIC INFORMATION

How to Erase DTC

With CONSULT-III

NOTE:

- If the ignition switch stays ON after repair work, be sure to turn ignition switch OFF once. Wait at least 10 seconds and then turn it ON (engine stopped) again.
- If the DTC is not for CVT related items (see EC-1117), skip step 1.

1. Erase DTC in TCM. Refer to CVT-24.
2. Select “ENGINE” with CONSULT-III.
3. Select “SELF-DIAG RESULTS”.

4. Touch “ERASE”. (DTC in ECM will be erased.)

With GST

NOTE:

If the ignition switch stays ON after repair work, be sure to turn ignition switch OFF once. Wait at least 10 seconds and then turn it ON (engine stopped) again.

1. Select Service $04 with GST (Generic Scan Tool).

No Tools

NOTE:

If the ignition switch stays ON after repair work, be sure to turn ignition switch OFF once. Wait at least 10 seconds and then turn it ON (engine stopped) again.

1. Erase DTC in ECM. Refer to How to Erase Diagnostic Test Mode II (Self-diagnostic Results).

- **If the battery is disconnected, the emission-related diagnostic information will be lost within 24 hours.**
- **The following data are cleared when the ECM memory is erased.**

- Diagnostic trouble codes
- 1st trip diagnostic trouble codes
- Freeze frame data
- 1st trip freeze frame data
- System readiness test (SRT) codes
- Test values

Actual work procedures are explained using a DTC as an example. Be careful so that not only the DTC, but all of the data listed above, are cleared from the ECM memory during work procedures.

How to Erase Permanent DTC

When a DTC is stored in ECM

- When a DTC is stored in ECM and MIL is ON, a permanent DTC is erased with MIL shutoff if the same malfunction is not detected after performing the driving pattern for MIL shutoff three times in a raw.

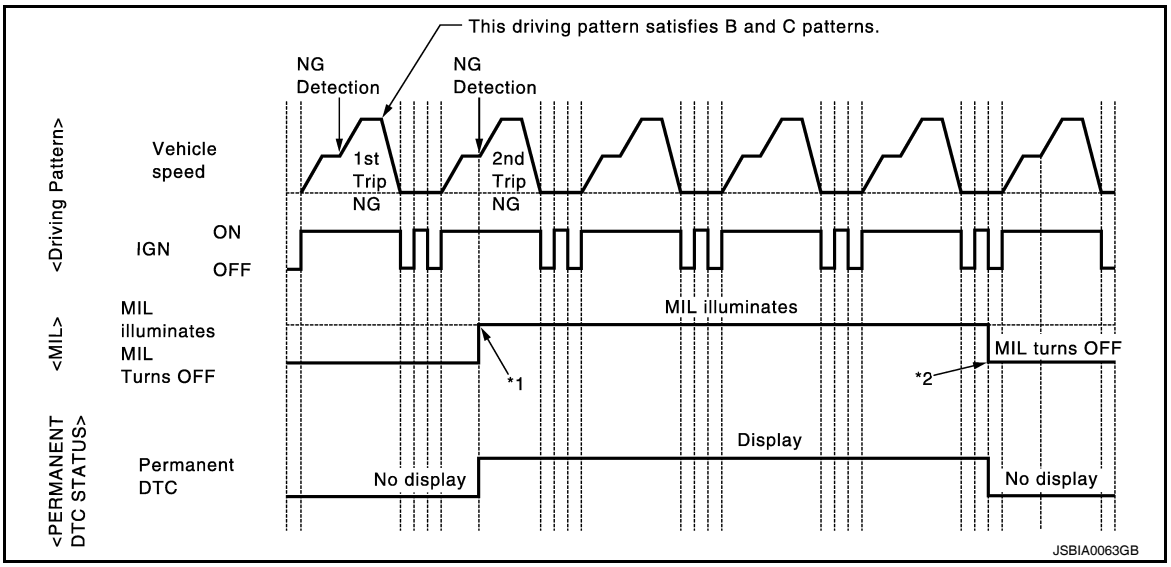

*1: When the same malfunction is detected in two consecutive trips, MIL will illuminate.

*2: MIL will turn off after vehicle is driven 3 times (pattern B) without any malfunctions.

When a DTC is not stored in ECM

- The erasing method depends on a permanent DTC stored in ECM. Refer to the following table.

×: Applicable —: Not applicable

Group*	Perform “DTC CONFIRMATION PROCEDURE” for applicable DTCs.	Driving pattern	
		B	D
A	×	—	—
B	—	×	×

*: For group, refer to EC-1155, "Emission-related Diagnostic Information", “EMISSION-RELATED DIAGNOSTIC INFORMATION ITEMS”.

Group A

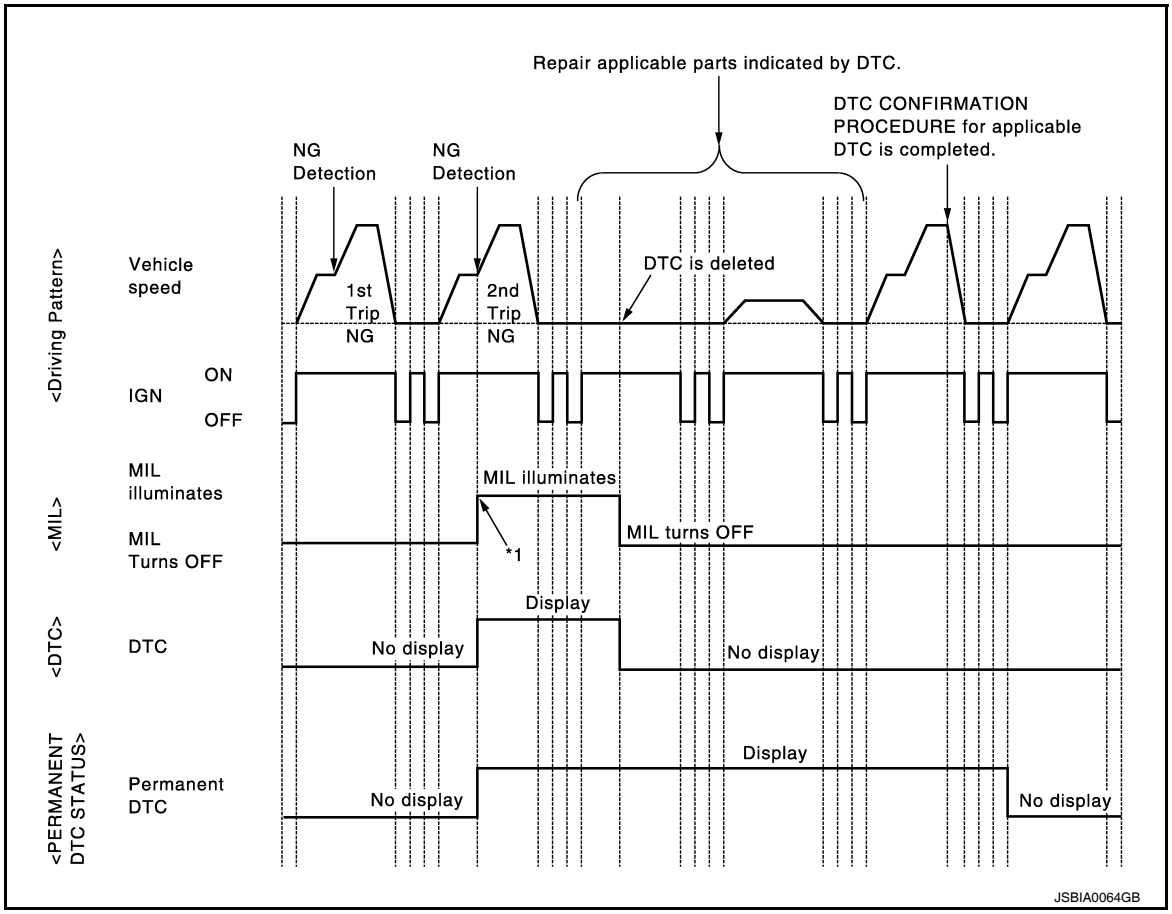

*1: When the same malfunction is detected in two consecutive trips, MIL will illuminate.

1. Turn ignition switch OFF and wait at least 10 seconds.
2. Turn ignition switch ON.
3. Turn ignition switch OFF and wait at least 10 seconds.
4. Turn ignition switch ON.
5. Check permanent DTC. Refer to EC-1155, "Emission-related Diagnostic Information", “How to Display Permanent DTC Status”.
6. Perform “DTC CONFIRMATION PROCEDURE” for DTCs which are the same as permanent DTCs stored in ECM.
7. Turn ignition switch OFF and wait at least 10 seconds.
8. Turn ignition switch ON.
9. Turn ignition switch OFF and wait at least 10 seconds.
10. Turn ignition switch ON.
11. Check permanent DTC. Refer to EC-1155, "Emission-related Diagnostic Information", “How to Display Permanent DTC Status”.
12. Check that the permanent DTCs have been erased.

Group B

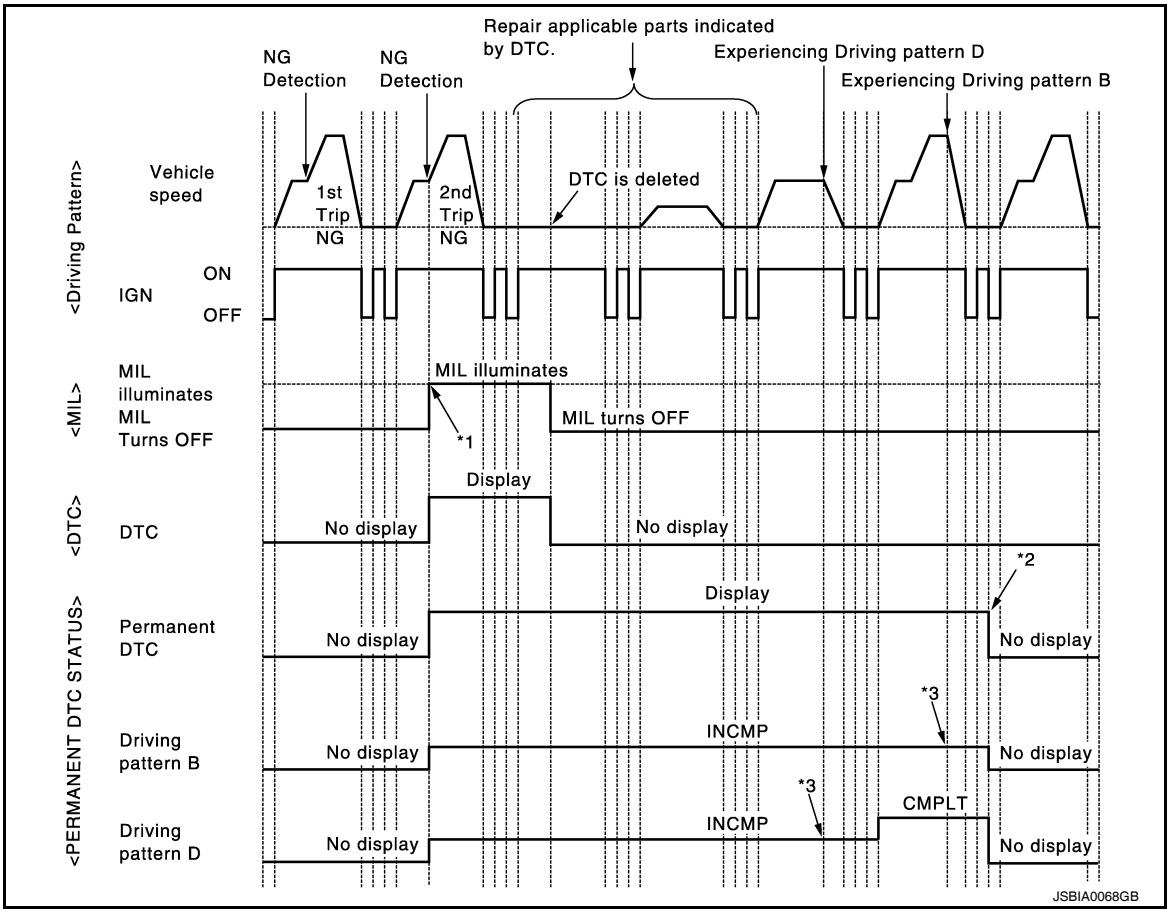

*1: When the same malfunction is detected in two consecutive trips, MIL will illuminate.

*2: After experiencing Driving pattern B and D, permanent DTC is erased.

*3: Indication does not change unless the ignition switch is turned from ON to OFF twice even after experiencing Driving pattern B or D.

NOTE:

- Drive the vehicle according to only driving patterns indicating “INCMP” in driving patterns B and D on the “PERMANENT DTC STATUS” screen.
- When experiencing both driving pattern B and D during the same trip, the experience of driving pattern D is counted by priority.

1. Turn ignition switch OFF and wait at least 10 seconds.
2. Turn ignition switch ON.
3. Turn ignition switch OFF and wait at least 10 seconds.
4. Turn ignition switch ON.
5. Check permanent DTC. Refer to EC-1155, "Emission-related Diagnostic Information", “How to Display Permanent DTC Status”.
6. Start engine and warm it up to normal operating temperature.
7. Drive the vehicle according to driving pattern D.
   CAUTION:
   - **Always drive at a safe speed.**
   - **Never erase self-diagnosis results.**
   - **If self-diagnosis results are erased during the trip of driving pattern B or D, the counter of driving pattern B or D is reset.**
   - **If self-diagnosis results are erased during the trip of driving pattern B or D, an experience of driving pattern B and D during the same trip is not counted up.**
8. Turn ignition switch OFF and wait at least 10 seconds.
9. Turn ignition switch ON.
10. Turn ignition switch OFF and wait at least 10 seconds.
11. Turn ignition switch ON.
12. Use “PERMANENT DTC WORK SUPPORT” to drive the vehicle according to driving pattern B.

CAUTION:
- **Always drive at a safe speed.**
- **Never erase self-diagnosis results.**
- **If self-diagnosis results are erased during the trip of driving pattern B or D, the counter of driving pattern B or D is reset.**
- **If self-diagnosis results are erased during the trip of driving pattern B or D, an experience of driving pattern B and D during the same trip is not counted up.**

13. Turn ignition switch OFF and wait at least 10 seconds.
14. Turn ignition switch ON.
15. Turn ignition switch OFF and wait at least 10 seconds.
16. Turn ignition switch ON.
17. Check permanent DTC. Refer to EC-1155, "Emission-related Diagnostic Information", “How to Display Permanent DTC Status”.
18. Check that the permanent DTCs have been erased.

DRIVING PATTERN

Driving Pattern B
- Driving pattern B means a trip satisfying the following conditions.
- Engine speed reaches 400 rpm or more.
- Water temperature reaches 70°C (158°F) ore more.
- Vehicle speed of 70 – 120 km/h (44 – 75 MPH) is maintained for 60 seconds or more under the control of closed loop.
- Vehicle speed of 30 – 60 km/h (19 – 37 MPH) is maintained for 10 seconds or more under the control of closed loop.
- Under the closed loop control condition, the following state reaches 12 seconds or more in total: Vehicle speed of 4 km/h (2 MPH) or less with idling condition.
- The state of driving at 10 km/h (7 MPH) or more reaches 10 minutes or more in total.
- A lapse of 22 minutes or more after engine start.

CAUTION:
Always drive at a safe speed.
NOTE:
- Drive the vehicle at a constant velocity.
- When the same malfunction is detected regardless of driving conditions, reset the counter of driving pattern B.
- When the above conditions are satisfied without detecting the same malfunction, reset the counter of driving pattern B.

Driving Pattern D
- Driving pattern D means operating vehicle as per the following.
- The state of driving at 40 km/h (25 MPH) reaches 300 seconds or more in total.
- Idle speed lasts 30 seconds or more.
- A lapse of 600 seconds or more after engine start.

CAUTION:
Always drive at a safe speed.
NOTE:
- When the same malfunction is detected regardless of driving conditions, reset the counter of driving pattern D.
- When the above conditions are satisfied without detecting the same malfunction, reset the counter of driving pattern D.

Malfunction Indicator Lamp (MIL)

INFOID:0000000005285736

DESCRIPTION

The MIL is located on the instrument panel.

1. The MIL will illuminate when the ignition switch is turned ON without the engine running. This is a bulb check.
   If the MIL does not illuminate, refer to DI-35 or see EC-1671.
2. When the engine is started, the MIL should turn off.
   If the MIL remains on, the on board diagnostic system has detected an engine system malfunction.

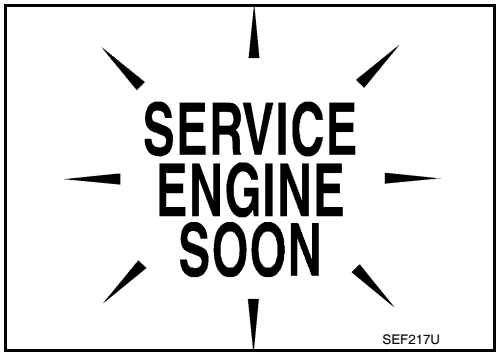

ON BOARD DIAGNOSTIC SYSTEM FUNCTION

The on board diagnostic system has the following three functions.

Diagnostic Test Mode	KEY and ENG. Status	Function	Explanation of Function
Mode I	Ignition switch in ON position Engine stopped	BULB CHECK	This function checks the MIL bulb for damage (blown, open circuit, etc.). If the MIL does not come on, check MIL circuit.
	Engine running	MALFUNCTION WARNING	This is a usual driving condition. When a malfunction is detected twice in two consecutive driving cycles (two trip detection logic), the MIL will illuminate to inform the driver that a malfunction has been detected. The following malfunctions will illuminate or blink the MIL in the 1st trip. • Misfire (Possible three way catalyst damage) • One trip detection diagnoses
Mode II	Ignition switch in ON position Engine stopped	SELF-DIAGNOSTIC RESULTS	This function allows DTCs and 1st trip DTCs to be read.

When there is an open circuit on MIL circuit, the ECM cannot warn the driver by MIL illuminating when there is malfunction on engine control system.
Therefore, when electrical controlled throttle and part of ECM related diagnoses are continuously detected as NG for 5 trips, ECM warns the driver that engine control system malfunctions and MIL circuit is open by means of operating fail-safe function.
The fail-safe function also operates when above diagnoses except MIL circuit are detected, and demands the driver to repair the malfunction.

Engine operating condition in fail-safe mode	Engine speed will not rise more than 2,500 rpm due to the fuel cut

MIL Flashing Without DTC

When any SRT codes are not set, MIL may flash without DTC. For the details, refer to EC-1155, "Emission-related Diagnostic Information".

HOW TO SWITCH DIAGNOSTIC TEST MODE

NOTE:

- **It is better to count the time accurately with a clock.**

- **It is impossible to switch the diagnostic mode when an accelerator pedal position sensor circuit has a malfunction.**
- **Always ECM returns to Diagnostic Test Mode I after ignition switch is turned OFF.**

How to Set Diagnostic Test Mode II (Self-diagnostic Results)

1. Confirm that accelerator pedal is fully released, turn ignition switch ON and wait 3 seconds.
2. Repeat the following procedure quickly five times within 5 seconds.

a. Fully depress the accelerator pedal.
b. Fully release the accelerator pedal.

3. Wait 7 seconds, fully depress the accelerator pedal and keep it for approx. 10 seconds until the MIL starts blinking.
4. Fully release the accelerator pedal.
   ECM has entered to Diagnostic Test Mode II (Self-diagnostic results).

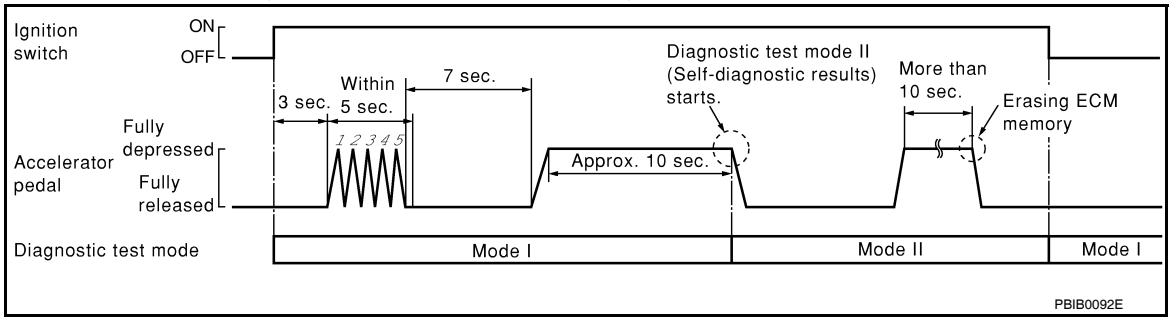

How to Erase Diagnostic Test Mode II (Self-diagnostic Results)

1. Set ECM in Diagnostic Test Mode II (Self-diagnostic results).
   Refer to “How to Set Diagnostic Test Mode II (Self-diagnostic Results)”.
2. Fully depress the accelerator pedal and keep it for more than 10 seconds.
   The emission-related diagnostic information has been erased from the backup memory in the ECM.
3. Fully release the accelerator pedal, and confirm the DTC 0000 is displayed.

DIAGNOSTIC TEST MODE I — BULB CHECK

In this mode, the MIL on the instrument panel should stay ON. If it remains OFF, check the bulb.
Refer to DI-35 or EC-1671.

DIAGNOSTIC TEST MODE I — MALFUNCTION WARNING

MIL	Condition
ON	When the malfunction is detected.
OFF	No malfunction

These DTC numbers are clarified in Diagnostic Test Mode II (SELF-DIAGNOSTIC RESULTS)

DIAGNOSTIC TEST MODE II — SELF-DIAGNOSTIC RESULTS

In this mode, the DTC and 1st trip DTC are indicated by the number of blinks of the MIL as shown below.
The DTC and 1st trip DTC are displayed at the same time. If the MIL does not illuminate in diagnostic test mode I (Malfunction warning), all displayed items are 1st trip DTCs. If only one code is displayed when the MIL illuminates in diagnostic test mode II (SELF-DIAGNOSTIC RESULTS), it is a DTC; if two or more codes are displayed, they may be either DTCs or 1st trip DTCs. DTC No. is same as that of 1st trip DTC. These uniden-

tified codes can be identified by using the CONSULT-III or GST. A DTC will be used as an example for how to read a code.

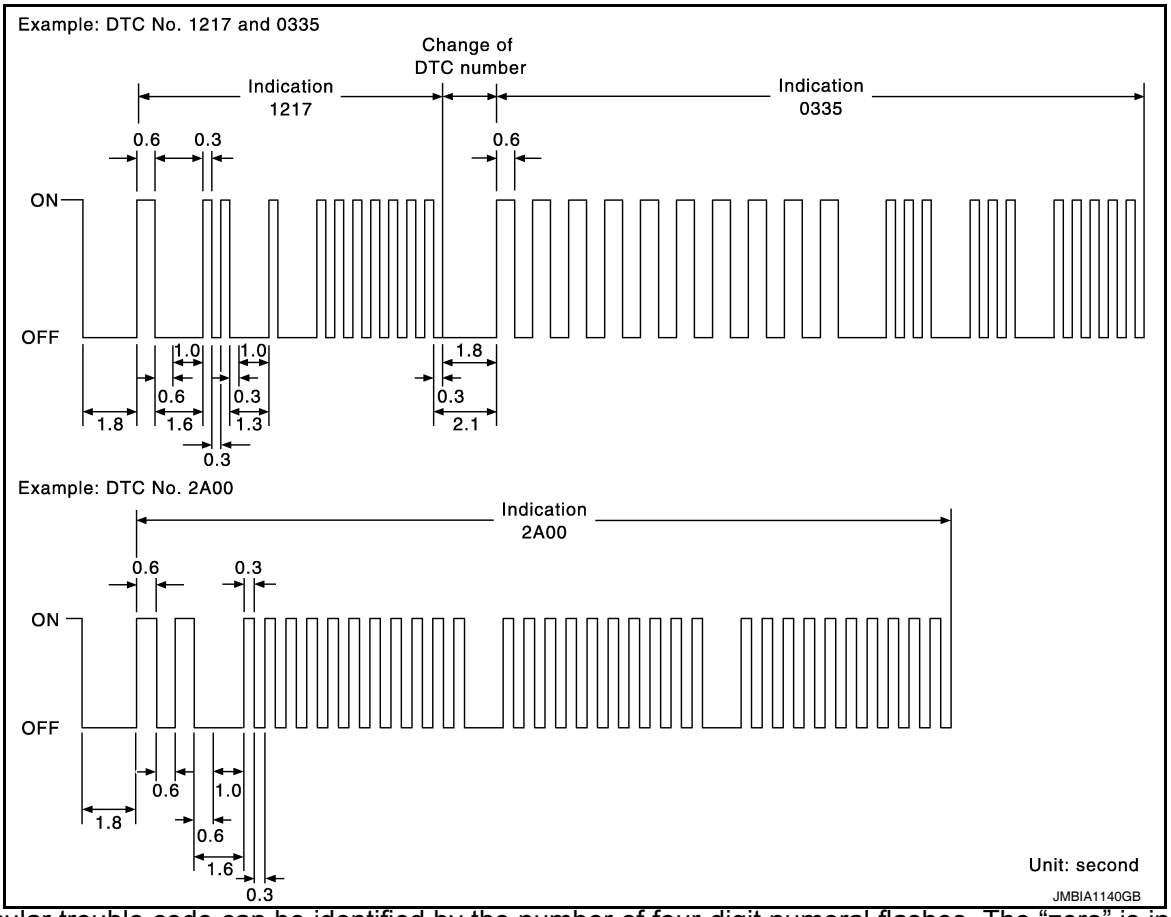

A particular trouble code can be identified by the number of four-digit numeral flashes. The “zero” is indicated by the number of ten flashes. The “A” is indicated by the number of eleven flash. The length of time the 1,000th-digit numeral flashes on and off is 1.2 seconds consisting of an ON (0.6-second) - OFF (0.6-second) cycle. The 100th-digit numeral and lower digit numerals consist of a 0.3-second ON and 0.3-second OFF cycle. A change from one digit numeral to another occurs at an interval of 1.0-second OFF. In other words, the later numeral appears on the display 1.3 seconds after the former numeral has disappeared.
A change from one trouble code to another occurs at an interval of 1.8-second OFF.
In this way, all the detected malfunctions are classified by their DTC numbers. The DTC 0000 refers to no malfunction. (See EC-1117)

How to Erase Diagnostic Test Mode II (Self-diagnostic Results)
The DTC can be erased from the back-up memory in the ECM by depressing accelerator pedal.
Refer to “How to Erase Diagnostic Test Mode II (Self-diagnostic Results)”.
- **If the battery is disconnected, the DTC will be lost from the backup memory within 24 hours.**
- **Be careful not to erase the stored memory before starting trouble diagnoses.**

OBD System Operation Chart

INFOID:0000000005568638

RELATIONSHIP BETWEEN MIL, 1ST TRIP DTC, DTC, AND DETECTABLE ITEMS

- When a malfunction is detected for the first time, the 1st trip DTC and the 1st trip freeze frame data are stored in the ECM memory.
- When the same malfunction is detected in two consecutive trips, the DTC and the freeze frame data are stored in the ECM memory, and the MIL will come on. For details, refer to EC-61, "Two Trip Detection Logic".
- The MIL will go off after the vehicle is driven 3 times (driving pattern B) with no malfunction. The drive is counted only when the recorded driving pattern is met (as stored in the ECM). If another malfunction occurs while counting, the counter will reset.
- The DTC and the freeze frame data will be stored until the vehicle is driven 40 times (driving pattern A) without the same malfunction recurring (except for Misfire and Fuel Injection System). For Misfire and Fuel Injection System, the DTC and freeze frame data will be stored until the vehicle is driven 80 times (driving pattern

C) without the same malfunction recurring. The “TIME” in “SELF-DIAGNOSTIC RESULTS” mode of CONSULT-III will count the number of times the vehicle is driven.

- The 1st trip DTC is not displayed when the self-diagnosis results in OK for the 2nd trip.

SUMMARY CHART

Items	Fuel Injection System	Misfire	Other
MIL (goes off)	3 (pattern B)	3 (pattern B)	3 (pattern B)
DTC, Freeze Frame Data (no display)	80 (pattern C)	80 (pattern C)	40 (pattern A)
1st Trip DTC (clear)	1 (pattern C), *1	1 (pattern C), *1	1 (pattern B)
1st Trip Freeze Frame Data (clear)	*1, *2	*1, *2	1 (pattern B)

For details about patterns B and C under “Fuel Injection System” and “Misfire”, see "EXPLANATION FOR DRIVING PATTERNS FOR “MISFIRE <EXHAUST QUALITY DETERIORATION>”, “FUEL INJECTION SYSTEM”".

For details about patterns A and B under “Other”, see "EXPLANATION FOR DRIVING PATTERNS FOR “MISFIRE <EXHAUST QUALITY DETERIORATION>”, “FUEL INJECTION SYSTEM”".

*1: Clear timing is at the moment OK is detected.

*2: Clear timing is when the same malfunction is detected in the 2nd trip.

RELATIONSHIP BETWEEN MIL, DTC, 1ST TRIP DTC AND DRIVING PATTERNS FOR “MISFIRE <EXHAUST QUALITY DETERIORATION>”, “FUEL INJECTION SYSTEM”

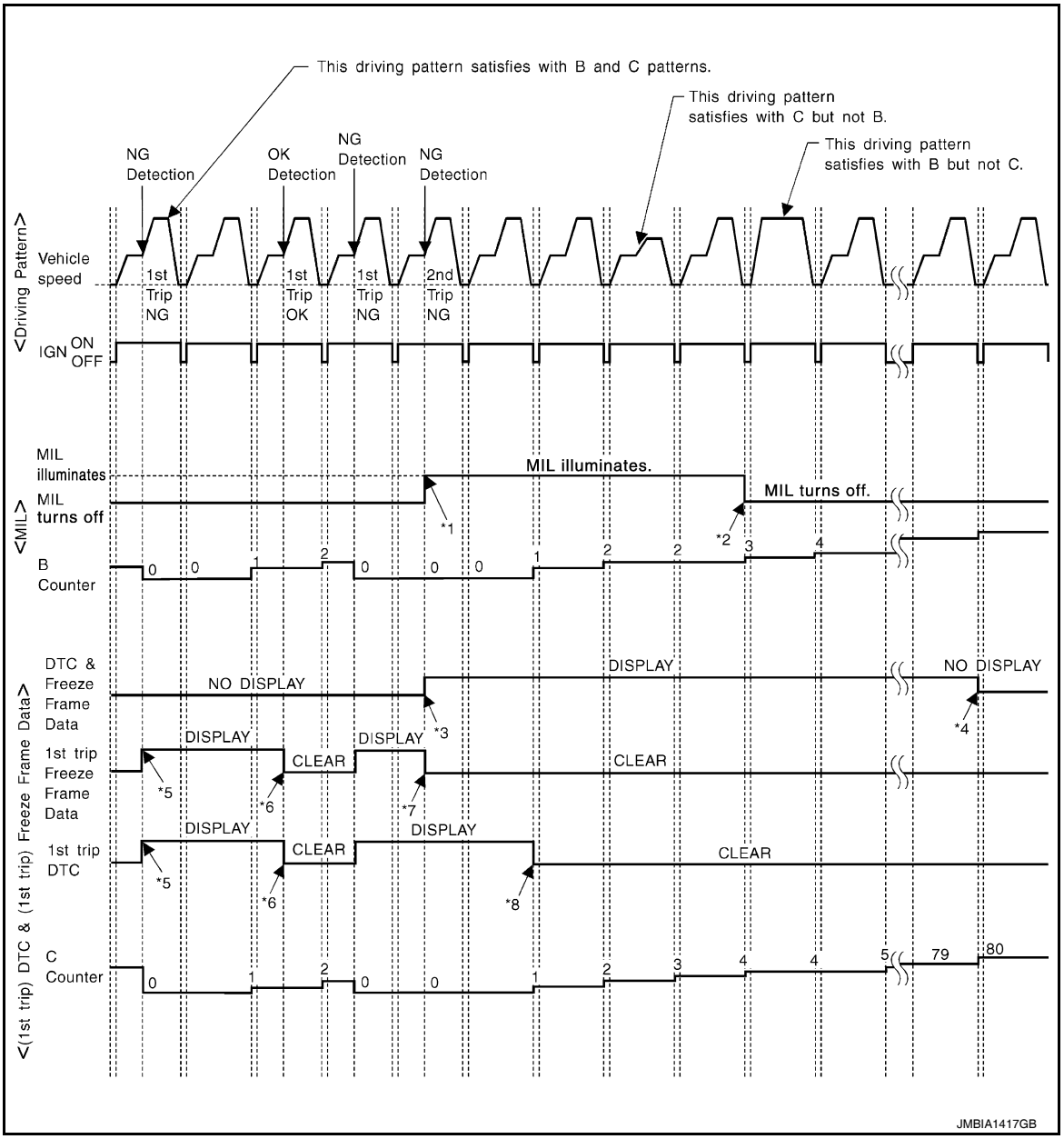

*1: When the same malfunction is detected in two consecutive trips, MIL will illuminate.

*2: MIL will turn off after vehicle is driven 3 times (pattern B) without any malfunctions.

*3: When the same malfunction is detected in two consecutive trips, the DTC and the freeze frame data will be stored in ECM.

*4: The DTC and the freeze frame data will not be displayed any longer after vehicle is driven 80 times (pattern C) without the same malfunction. (The DTC and the freeze frame data still remain in ECM.)

*5: When a malfunction is detected for the first time, the 1st trip DTC and the 1st trip freeze frame data will be stored in ECM.

*6: The 1st trip DTC and the 1st trip freeze frame data will be cleared at the moment OK is detected.

*7: When the same malfunction is detected in the 2nd trip, the 1st trip freeze frame data will be cleared.

*8: 1st trip DTC will be cleared when vehicle is driven once (pattern C) without the same malfunction after DTC is stored in ECM.

EXPLANATION FOR DRIVING PATTERNS FOR “MISFIRE <EXHAUST QUALITY DETERIORATION>”, “FUEL INJECTION SYSTEM”

<Driving Pattern B>

Driving pattern B means the vehicle operation as follows:

All components and systems should be monitored at least once by the OBD system.
- The B counter will be cleared when the malfunction is detected once regardless of the driving pattern.
- The B counter will be counted up when driving pattern B is satisfied without any malfunction.
- The MIL will go off when the B counter reaches 3. (*2 in “OBD SYSTEM OPERATION CHART”)

<Driving Pattern C>
Driving pattern C means the vehicle operation as follows:
The following conditions should be satisfied at the same time:
Engine speed: (Engine speed in the freeze frame data) ±375 rpm
Calculated load value: (Calculated load value in the freeze frame data) x (1±0.1) [%]
Engine coolant temperature (T) condition:
- When the freeze frame data shows lower than 70°C (158°F), “T” should be lower than 70°C (158°F).
- When the freeze frame data shows higher than or equal to 70°C (158°F), “T” should be higher than or equal to 70°C (158°F).

Example:
If the stored freeze frame data is as follows:
Engine speed: 850 rpm, Calculated load value: 30%, Engine coolant temperature: 80°C (176°F)
To be satisfied with driving pattern C, the vehicle should run under the following conditions:
Engine speed: 475 - 1,225 rpm, Calculated load value: 27 - 33%, Engine coolant temperature: more than 70°C (158°F)
- The C counter will be cleared when the malfunction is detected regardless of vehicle conditions above.
- The C counter will be counted up when vehicle conditions above is satisfied without the same malfunction.
- The DTC will not be displayed after C counter reaches 80.
- The 1st trip DTC will be cleared when C counter is counted once without the same malfunction after DTC is stored in ECM.

RELATIONSHIP BETWEEN MIL, DTC, 1ST TRIP DTC AND DRIVING PATTERNS EXCEPT FOR “MISFIRE <EXHAUST QUALITY DETERIORATION>”, “FUEL INJECTION SYSTEM”

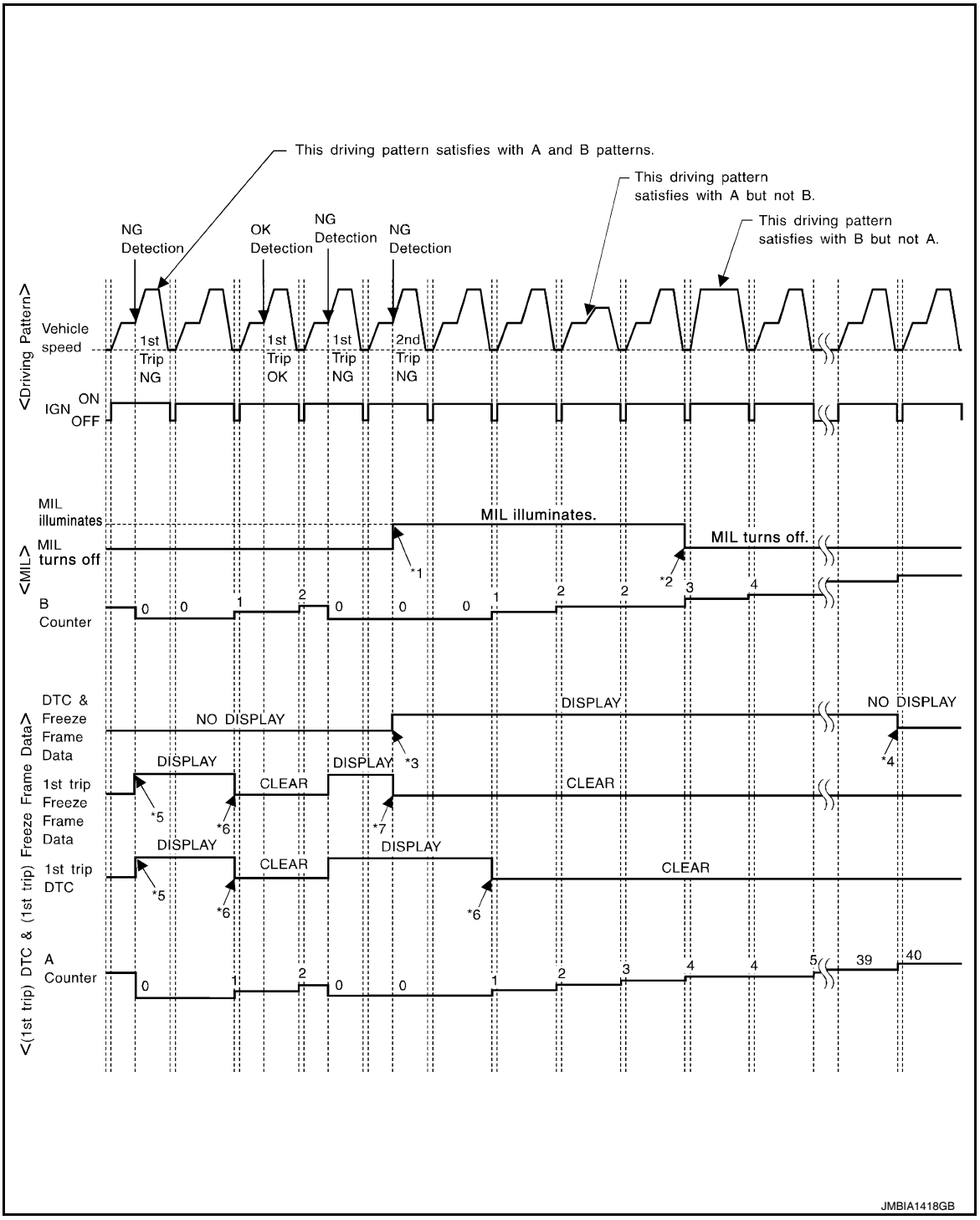

*1: When the same malfunction is detected in two consecutive trips, MIL will illuminate.

*2: MIL will turn off after vehicle is driven 3 times (pattern B) without any malfunctions.

*3: When the same malfunction is detected in two consecutive trips, the DTC and the freeze frame data will be stored in ECM.

*4: The DTC and the freeze frame data will not be displayed any longer after vehicle is driven 40 times (pattern A) without the same malfunction. (The DTC and the freeze frame data still remain in ECM.)

*5: When a malfunction is detected for the first time, the 1st trip DTC and the 1st trip freeze frame data will be stored in ECM.

*6: 1st trip DTC will be cleared after vehicle is driven once (pattern B) without the same malfunction.

*7: When the same malfunction is detected in the 2nd trip, the 1st trip freeze frame data will be cleared.

EXPLANATION FOR DRIVING PATTERNS EXCEPT FOR “MISFIRE <EXHAUST QUALITY DETERIORATION>”, “FUEL INJECTION SYSTEM”

<Driving Pattern A>

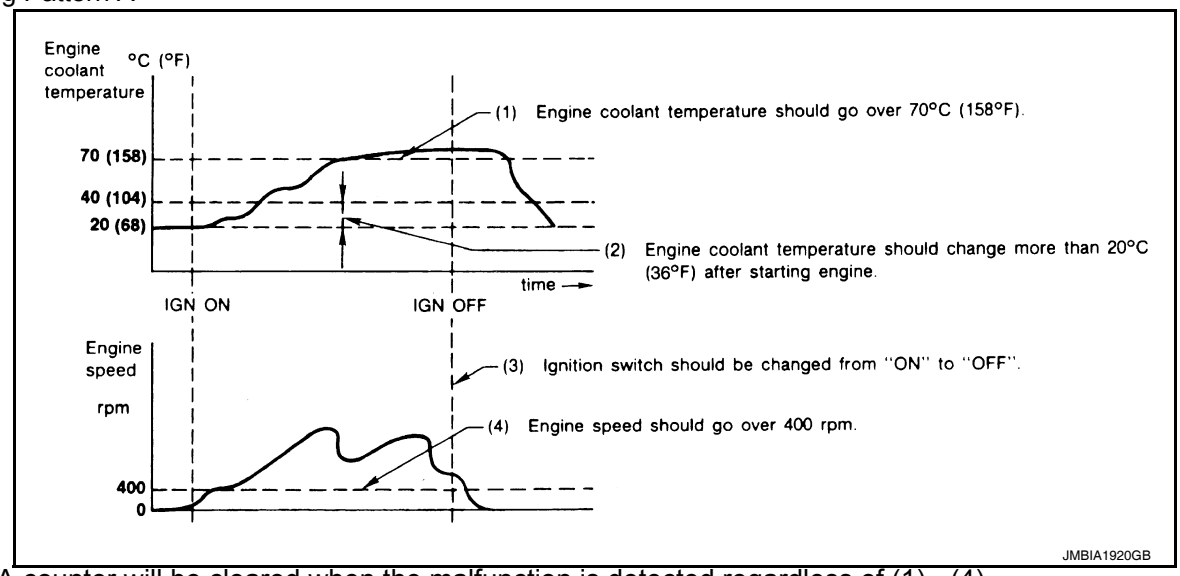

- The A counter will be cleared when the malfunction is detected regardless of (1) - (4).
- The A counter will be counted up when (1) - (4) are satisfied without the same malfunction.
- The DTC will not be displayed after the A counter reaches 40.

<Driving Pattern B>

Driving pattern B means the vehicle operation as follows:
All components and systems should be monitored at least once by the OBD system.

- The B counter will be cleared when the malfunction is detected once regardless of the driving pattern.
- The B counter will be counted up when driving pattern B is satisfied without any malfunctions.
- The MIL will go off when the B counter reaches 3 (*2 in “OBD SYSTEM OPERATION CHART”).

BASIC SERVICE PROCEDURE

Basic Inspection

INFOID:0000000005285738

1. INSPECTION START

1. Check service records for any recent repairs that may indicate a related malfunction, or a current need for scheduled maintenance.
2. Open engine hood and check the following:
- Harness connectors for improper connections
- Wiring harness for improper connections, pinches and cut
- Vacuum hoses for splits, kinks and improper connections
- Hoses and ducts for leakage
- Air cleaner clogging
- Gasket
3. Check that electrical or mechanical loads are not applied.
- Headlamp switch is OFF.
- Air conditioner switch is OFF.
- Rear window defogger switch is OFF.
- Steering wheel is in the straight-ahead position, etc.
4. Start engine and warm it up until engine coolant temperature indicator points to the middle of gauge.
   Check that engine stays below 1,000 rpm.

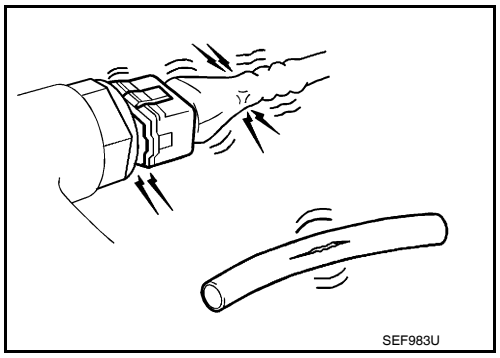

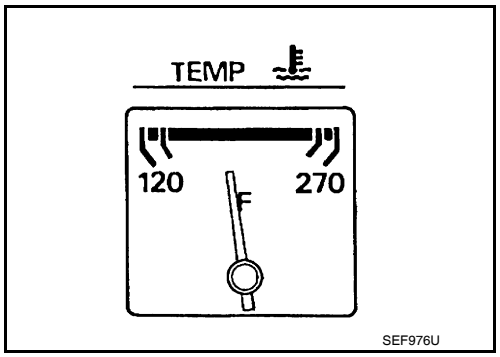

5. Run engine at approximately 2,000 rpm for approximately 2 minutes under no load.
6. Check that no DTC is displayed with CONSULT-III or GST.

OK or NG

OK >> GO TO 3.
NG >> GO TO 2.

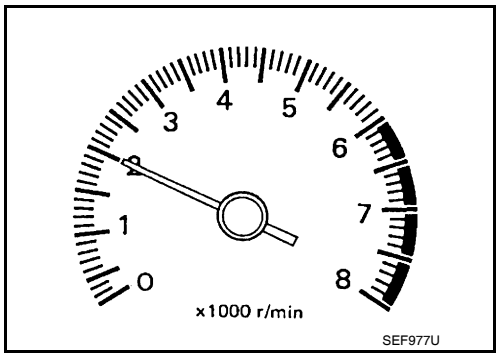

2. REPAIR OR REPLACE

Repair or replace components as necessary according to corresponding Diagnostic Procedure.

>> GO TO 3.

3. CHECK TARGET IDLE SPEED

With CONSULT-III

1. Run engine at approximately 2,000 rpm for approximately 2 minutes under no load.

2. Rev engine (2,000 to 3,000 rpm) two or three times under no load, then run engine at idle speed for approximately 1 minute.
3. Read idle speed in “DATA MONITOR” mode with CONSULT-III. Refer to EC-1191, "Idle Speed and Ignition Timing Check".

M/T: 800 ± 50 rpm (in Neutral position)
CVT: 650 ± 50 rpm (in P or N position)

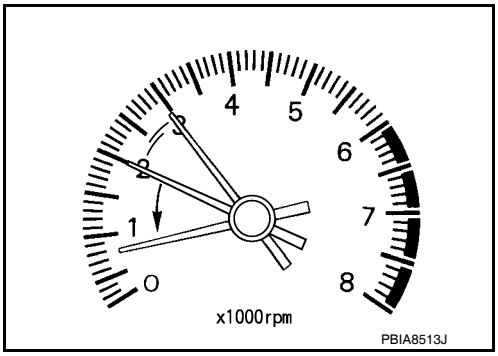

Without CONSULT-III
1. Run engine at approximately 2,000 rpm for approximately 2 minutes under no load.
2. Rev engine (2,000 to 3,000 rpm) two or three times under no load, then run engine at idle speed for approximately 1 minute.
3. Check idle speed. Refer to EC-1191, "Idle Speed and Ignition Timing Check".

M/T: 800 ± 50 rpm (in Neutral position)
CVT: 650 ± 50 rpm (in P or N position)

OK or NG

OK >> GO TO 10.
NG >> GO TO 4.

4. PERFORM ACCELERATOR PEDAL RELEASED POSITION LEARNING

1. Stop engine.
2. Perform EC-1193, "Accelerator Pedal Released Position Learning".

>> GO TO 5.

5. PERFORM THROTTLE VALVE CLOSED POSITION LEARNING

Perform EC-1193, "Throttle Valve Closed Position Learning".

>> GO TO 6.

6. PERFORM IDLE AIR VOLUME LEARNING

Refer to EC-1193, "Idle Air Volume Learning".
Is Idle Air Volume Learning carried out successfully?

Yes or No

Yes >> GO TO 7.
No >> 1. Follow the instruction of Idle Air Volume Learning.
2. GO TO 4.

7. CHECK IDLE SPEED AGAIN

With CONSULT-III
1. Start engine and warm it up to normal operating temperature.
2. Read idle speed in “DATA MONITOR” mode with CONSULT-III. Refer to EC-1191, "Idle Speed and Ignition Timing Check".

M/T: 800 ± 50 rpm (in Neutral position)
CVT: 650 ± 50 rpm (in P or N position)

Without CONSULT-III
1. Start engine and warm it up to normal operating temperature.
2. Check idle speed. Refer to EC-1191, "Idle Speed and Ignition Timing Check".

M/T: 800± 50 rpm (in Neutral position)
CVT: 650 ± 50 rpm (in P or N position)

OK or NG

OK >> GO TO 10.
NG >> GO TO 8.

8. DETECT MALFUNCTIONING PART

Check the following.
- Check crankshaft position sensor (POS) and circuit.
  Refer to EC-1425.
- Check camshaft position sensor (PHASE) and circuit.
  Refer to EC-1431.

OK or NG

OK >> GO TO 9.
NG >> 1. Repair or replace.
2. GO TO 4.

9. CHECK ECM FUNCTION

1. Substitute with a non-malfunctioning ECM to check ECM function. (ECM may be the cause of the incident, although this is rare.)
2. Perform initialization of NVIS (NATS) system and registration of all NVIS (NATS) ignition key IDs.
   Refer to BL-171, "ECM Re-communicating Function".

>> GO TO 4.

10. CHECK IGNITION TIMING

1. Run engine at idle.
2. Check ignition timing with a timing light.
   Refer to EC-1191, "Idle Speed and Ignition Timing Check".

- Timing indicator (1)

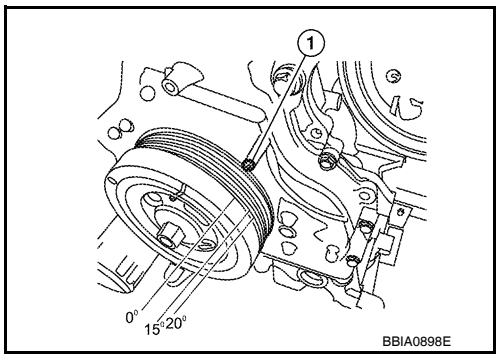

M/T: 10 ± 5° BTDC (in Neutral position)
CVT:10 ± 5° BTDC (in P or N position)

OK or NG

OK >> GO TO 19.
NG >> GO TO 11.

11. PERFORM ACCELERATOR PEDAL RELEASED POSITION LEARNING

1. Stop engine.
2. Perform EC-1193, "Accelerator Pedal Released Position Learning".

>> GO TO 12.

12. PERFORM THROTTLE VALVE CLOSED POSITION LEARNING

Perform EC-1193, "Throttle Valve Closed Position Learning".

>> GO TO 13.

13. PERFORM IDLE AIR VOLUME LEARNING

Refer to EC-1193, "Idle Air Volume Learning".
Is Idle Air Volume Learning carried out successfully?

Yes or No

Yes >> GO TO 14.
No >> 1. Follow the instruction of Idle Air Volume Learning.

2. GO TO 4.

14. CHECK TARGET IDLE SPEED AGAIN

With CONSULT-III

1. Start engine and warm it up to normal operating temperature.
2. Read idle speed in “DATA MONITOR” mode with CONSULT-III. Refer to EC-1191, "Idle Speed and Ignition Timing Check".

M/T: 800 ± 50 rpm (in Neutral position)
CVT: 650 ± 50 rpm (in P or N position)

Without CONSULT-III

1. Start engine and warm it up to normal operating temperature.
2. Check idle speed. Refer to EC-1191, "Idle Speed and Ignition Timing Check".

M/T: 800 ± 50 rpm (in Neutral position)
CVT: 650 ± 50 rpm (in P or N position)

OK or NG

OK >> GO TO 15.
NG >> GO TO 17.

15. CHECK IGNITION TIMING AGAIN

1. Run engine at idle.
2. Check ignition timing with a timing light.
   Refer to EC-1191, "Idle Speed and Ignition Timing Check".

- Timing indicator (1)

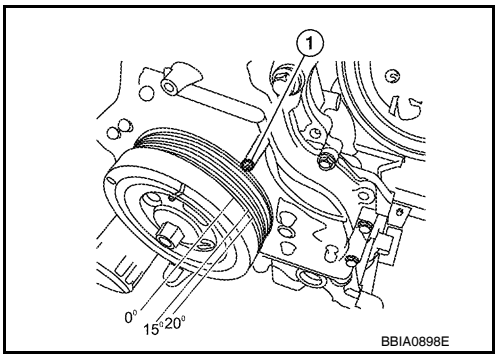

M/T: 10 ± 5° BTDC (in Neutral position)
CVT: 10 ± 5° BTDC (in P or N position)

OK or NG

OK >> GO TO 19
NG >> GO TO 16.

16. CHECK TIMING CHAIN INSTALLATION

Check timing chain installation. Refer to EM-164.

OK or NG

OK >> GO TO 17.
NG >> 1. Repair the timing chain installation.
2. GO TO 4.

17. DETECT MALFUNCTIONING PART

Check the following.

- Check crankshaft position sensor (POS) and circuit.
  Refer to EC-1425.
- Check camshaft position sensor (PHASE) and circuit.
  Refer to EC-1431.

OK or NG

OK >> GO TO 18.
NG >> 1. Repair or replace.
2. GO TO 4.

18. CHECK ECM FUNCTION

1. Substitute with a non-malfunctioning ECM to check ECM function. (ECM may be the cause of the incident, although this is rare.)
2. Perform initialization of NVIS (NATS) system and registration of all NVIS (NATS) ignition key IDs.
   Refer to BL-171, "ECM Re-communicating Function".

>> GO TO 4.

19. INSPECTION END

Did you replace ECM, referring this Basic Inspection procedure?

Yes or No

Yes >> 1. Perform EC-1193, "VIN Registration".
2. **INSPECTION END**

No >> **INSPECTION END**

Idle Speed and Ignition Timing Check

INFOID:0000000005285739

IDLE SPEED

With CONSULT-III

Check idle speed in “DATA MONITOR” mode with CONSULT-III.

With GST

Check idle speed in Service $01 with GST.

IGNITION TIMING

Any of following two methods may be used.

Method A

1. Attach timing light to loop wire as shown.
   - ⇦: Vehicle front
   - Ignition coil No. 1 (1)
   - Timing light (2)

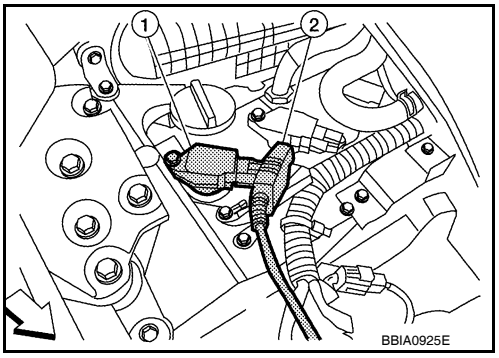

2. Check ignition timing.
   - Timing indicator (1)

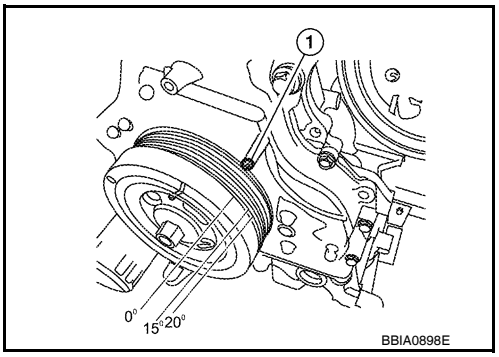

Method B

1. Remove No. 1 ignition coil (1).

- ⇦: Vehicle front

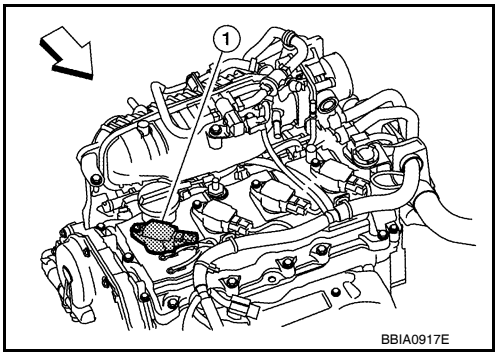

2. Connect No. 1 ignition coil (3) and No. 1 spark plug with suitable high-tension wire (1) as shown, and attach timing light (2) clamp to this wire.
   - ⇦: Vehicle front

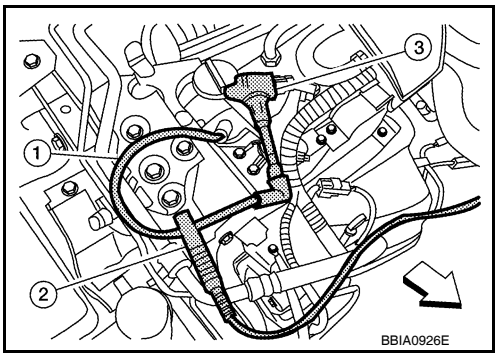

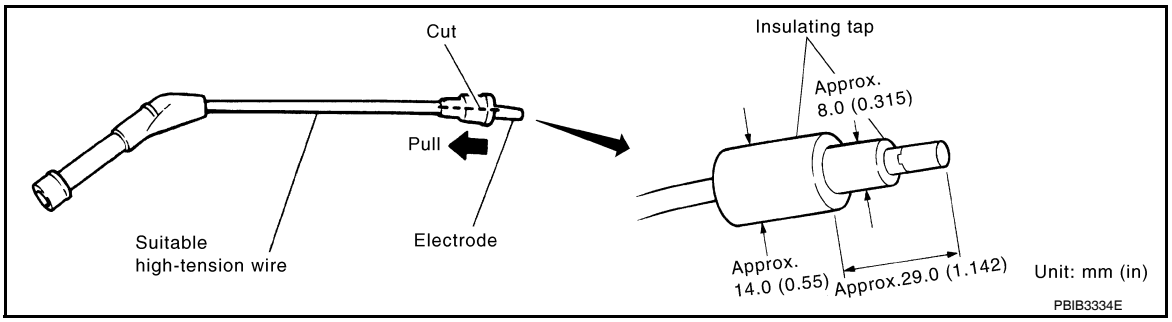

3. Check ignition timing.
   - Timing indicator (1)

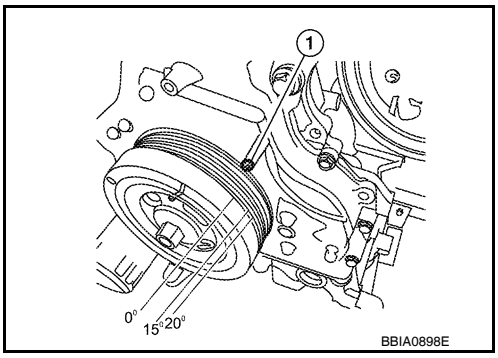

Procedure After Replacing ECM

INFOID:0000000005285740

When replacing ECM, the following procedure must be performed.

1. Perform initialization of NVIS (NATS) system and registration of all NVIS (NATS) ignition key IDs. Refer to BL-171, "ECM Re-communicating Function".
2. Perform EC-1193, "VIN Registration".
3. Perform EC-1193, "Accelerator Pedal Released Position Learning".
4. Perform EC-1193, "Throttle Valve Closed Position Learning".

5. Perform EC-1193, "Idle Air Volume Learning".

VIN Registration

INFOID:0000000005285741

DESCRIPTION

VIN Registration is an operation to register VIN in ECM. It must be performed each time ECM is replaced.

NOTE:

Accurate VIN which is registered in ECM may be required for Inspection & Maintenance (I/M).

OPERATION PROCEDURE

With CONSULT-III

1. Check the VIN of the vehicle and note it. Refer to GI-45.
2. Turn ignition switch ON with engine stopped.
3. Select “VIN REGISTRATION” in “WORK SUPPORT” mode.
4. Follow the instruction on the CONSULT-III display.

Accelerator Pedal Released Position Learning

INFOID:0000000005285742

DESCRIPTION

Accelerator Pedal Released Position Learning is a function of ECM to learn the fully released position of the accelerator pedal by monitoring the accelerator pedal position sensor output signal. It must be performed each time harness connector of accelerator pedal position sensor or ECM is disconnected.

OPERATION PROCEDURE

1. Check that accelerator pedal is fully released.
2. Turn ignition switch ON and wait at least 2 seconds.
3. Turn ignition switch OFF and wait at least 10 seconds.
4. Turn ignition switch ON and wait at least 2 seconds.
5. Turn ignition switch OFF and wait at least 10 seconds.

Throttle Valve Closed Position Learning

INFOID:0000000005285743

DESCRIPTION

Throttle Valve Closed Position Learning is a function of ECM to learn the fully closed position of the throttle valve by monitoring the throttle position sensor output signal. It must be performed each time the harness connector of electric throttle control actuator or ECM is disconnected.

OPERATION PROCEDURE

1. Check that accelerator pedal is fully released.
2. Turn ignition switch ON.
3. Turn ignition switch OFF and wait at least 10 seconds.
   Check that throttle valve moves during above 10 seconds by confirming the operating sound.

Idle Air Volume Learning

INFOID:0000000005285744

DESCRIPTION

Idle Air Volume Learning is an operation to learn the idle air volume that keeps each engine within the specific range. It must be performed under any of the following conditions:

- Each time the electric throttle control actuator or ECM is replaced.
- Idle speed or ignition timing is out of the specification.

PREPARATION

Check that all of the following conditions are satisfied.

Learning will be cancelled if any of the following conditions are missed for even a moment.

- Battery voltage: More than 12.9 V (At idle)
- Engine coolant temperature: 70 - 100°C (158 - 212°F)
- Selector lever position: P or N (CVT), Neutral (M/T)
- Electric load switch: OFF

(Air conditioner, headlamp rear window defogger)
On vehicles equipped with daytime light systems, if the parking brake is applied before the engine is started the headlamp will not be illuminated.
- Steering wheel: Neutral (Straight-ahead position)
- Vehicle speed: Stopped
- Transmission: Warmed-up
- For CVT models
- With CONSULT-III: Drive vehicle until “FLUID TEMP SE” in “DATA MONITOR” mode of “CVT” system indicates less than 0.9 V.
- Without CONSULT-III: Drive vehicle for 10 minutes.
- For M/T models
- Drive vehicle for 10 minutes.

OPERATION PROCEDURE

With CONSULT-III

1. Perform EC-1193, "Accelerator Pedal Released Position Learning".
2. Perform EC-1193, "Throttle Valve Closed Position Learning".
3. Start engine and warm it up to normal operating temperature.
4. Check that all items listed under the topic PREPARATION (previously mentioned) are in good order.
5. Select “IDLE AIR VOL LEARN” in “WORK SUPPORT” mode.
6. Touch “START” and wait 20 seconds.
7. Check that “CMPLT” is displayed on CONSULT-III screen. If “CMPLT” is not displayed, Idle Air Volume Learning will not be carried out successfully. In this case, find the cause of the incident by referring to the DIAGNOSTIC PROCEDURE below.
8. Rev up the engine two or three times and check that idle speed and ignition timing are within the specifications.
   Refer to EC-1187, "Basic Inspection".

Item	Specification
Idle speed	M/T: 800 ± 50 rpm (in Neutral position) CVT: 650 ± 50 rpm (in P or N position)
Ignition timing	M/T:10 ± 5° BTDC (in Neutral position) CVT: 10 ± 5° BTDC (in P or N position)

Without CONSULT-III

NOTE:
- **It is better to count the time accurately with a clock.**
- **It is impossible to switch the diagnostic mode when an accelerator pedal position sensor circuit has a malfunction.**

1. Perform EC-1193, "Accelerator Pedal Released Position Learning".
2. Perform EC-1193, "Throttle Valve Closed Position Learning".
3. Start engine and warm it up to normal operating temperature.
4. Check that all items listed under the topic PREPARATION (previously mentioned) are in good order.
5. Turn ignition switch OFF and wait at least 10 seconds.
6. Confirm that accelerator pedal is fully released, turn ignition switch ON and wait 3 seconds.
7. Repeat the following procedure quickly five times within 5 seconds.

a. Fully depress the accelerator pedal.
b. Fully release the accelerator pedal.

8. Wait 7 seconds, fully depress the accelerator pedal and keep it for approx. 20 seconds until the MIL stops blinking and turned ON.
9. Fully release the accelerator pedal within 3 seconds after the MIL turned ON.
10. Start engine and let it idle.

11. Wait 20 seconds.

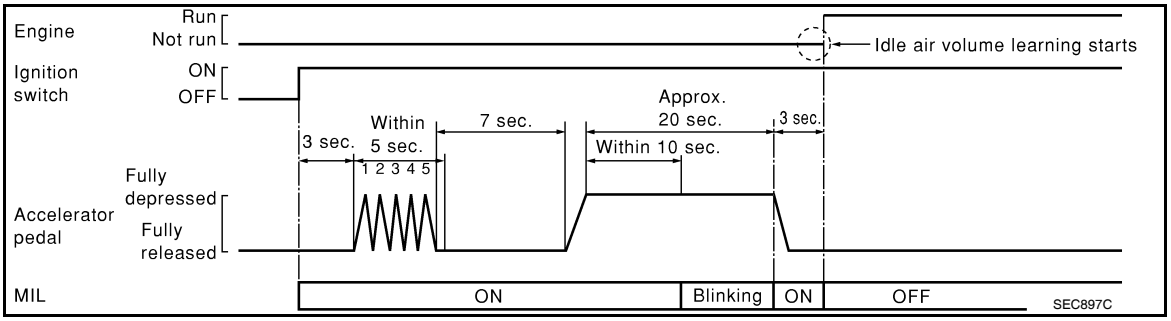

12. Rev up the engine two or three times and check that idle speed and ignition timing are within the specifications. Refer to EC-1187, "Basic Inspection".

Item	Specification
Idle speed	M/T: 800 ± 50 rpm (in Neutral position) CVT: 650 ± 50 rpm (in P or N position)
Ignition timing	M/T: 10 ± 5° BTDC (in Neutral position) CVT: 10 ± 5° BTDC (in P or N position)

13. If idle speed and ignition timing are not within the specification, Idle Air Volume Learning will not be carried out successfully. In this case, find the cause of the incident by referring to the DIAGNOSTIC PROCEDURE below.

DIAGNOSTIC PROCEDURE

If idle air volume learning cannot be performed successfully, proceed as follows:

1. **Check that throttle valve is fully closed.**
2. **Check PCV valve operation.**
3. **Check that downstream of throttle valve is free from air leakage.**
4. **When the above three items check out OK, engine component parts and their installation condition are questionable. Check and eliminate the cause of the incident.**
   It is useful to perform EC-1237.
5. **If any of the following conditions occur after the engine has started, eliminate the cause of the incident and perform Idle Air Volume Learning all over again:**

- **Engine stalls.**
- **Erroneous idle.**

Fuel Pressure Check

INFOID:0000000005285745

FUEL PRESSURE RELEASE

With CONSULT-III

1. Turn ignition switch ON.
2. Perform “FUEL PRESSURE RELEASE” in “WORK SUPPORT” mode with CONSULT-III.
3. Start engine.
4. After engine stalls, crank it two or three times to release all fuel pressure.
5. Turn ignition switch OFF.

Without CONSULT-III

1. Remove fuel pump fuse (1) located in IPDM E/R (2).
   - ⇦: Vehicle front
2. Start engine.
3. After engine stalls, crank it two or three times to release all fuel pressure.
4. Turn ignition switch OFF.
5. Reinstall fuel pump fuse after servicing fuel system.

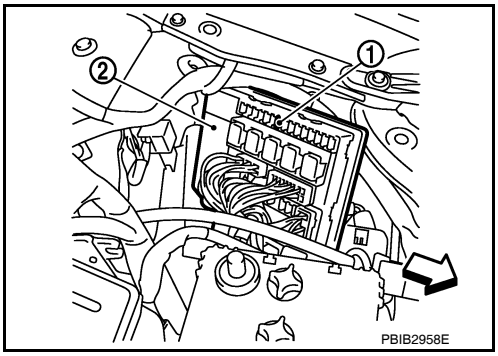

FUEL PRESSURE CHECK

CAUTION:

Before disconnecting fuel line, release fuel pressure from fuel line to eliminate danger.

NOTE:

- **Prepare pans or saucers under the disconnected fuel line because the fuel may spill out. The fuel pressure cannot be completely released because B16 models never have fuel return system.**
- **Be careful not to scratch or get the fuel hose connection area dirty when servicing, so that the quick connector o-ring maintains seal ability.**
- **Use Fuel Pressure Gauge Kit [SST (J-44321)] (A) and Fuel Pressure Adapter [SST (J-44321-6)] (B) to check fuel pressure.**

1. Release fuel pressure to zero. Refer to “FUEL PRESSURE RELEASE”.
2. Remove fuel hose using Quick Connector Release [SST (J-45488)]. Refer to EM-148.
   - Never twist or kink fuel hose because it is plastic hose.
   - Never remove fuel hose (1) from quick connector.
   - Keep fuel hose connections clean.
3. Install Fuel Pressure Adapter [SST (J-44321-6)] and Fuel Pressure Gauge kit [SST (J-44321)] as shown in figure.
   - Never distort or bend fuel rail tube when installing fuel pressure gauge adapter.
   - When reconnecting fuel hose, check the original fuel hose for damage and abnormality.
4. Turn ignition switch ON (reactivate fuel pump), and check for fuel leakage.
5. Start engine and check for fuel leakage.
6. Read the indication of fuel pressure gauge.
   - During fuel pressure check, check for fuel leakage from fuel connection every 3 minutes.

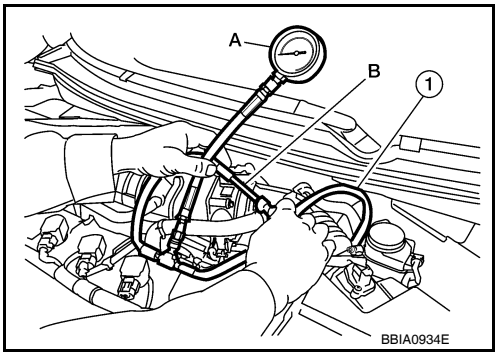

At idling: Approximately 350 kPa (3.57 kg/cm^2, 51 psi)

7. If result is unsatisfactory, go to next step.
8. Check the following.
   - Fuel hoses and fuel tubes for clogging
   - Fuel filter for clogging
   - Fuel pump
   - Fuel pressure regulator for clogging

   If OK, replace fuel pressure regulator.
   If NG, repair or replace.
9. Before disconnecting Fuel Pressure Gauge and Fuel Pressure Adapter [SSt (J-44321-6)], release fuel pressure to zero. Refer to “FUEL PRESSURE RELEASE”.

TROUBLE DIAGNOSIS

Trouble Diagnosis Introduction

INFOID:0000000005285746

INTRODUCTION

The engine has an ECM to control major systems such as fuel control, ignition control, idle air control system, etc. The ECM accepts input signals from sensors and instantly drives actuators. It is essential that both input and output signals are proper and stable. At the same time, it is important that there are no malfunctions such as vacuum leaks, fouled spark plugs, or other malfunctions with the engine.

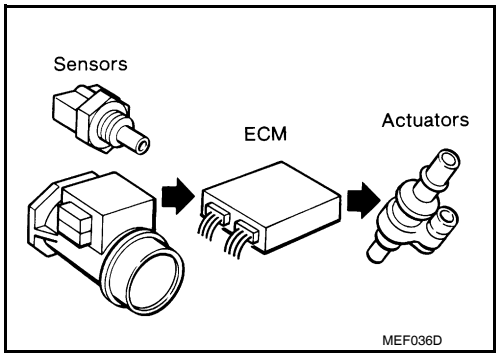

It is much more difficult to diagnose an incident that occurs intermittently rather than continuously. Most intermittent incidents are caused by poor electric connections or improper wiring. In this case, careful checking of suspected circuits may help prevent the replacement of good parts.

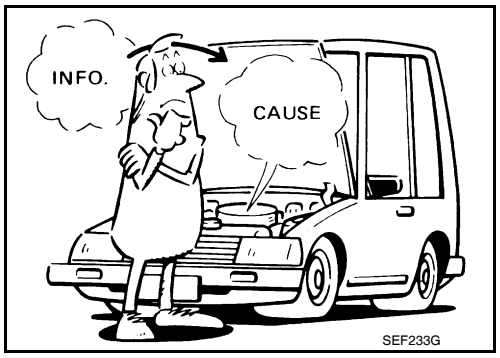

A visual check only may not find the cause of the incidents. A road test with CONSULT-III (or GST) or a circuit tester connected should be performed. Follow the Work Flow on “WORK FLOW”.
Before undertaking actual checks, take a few minutes to talk with a customer who approaches with a drivability complaint. The customer can supply good information about such incidents, especially intermittent ones. Find out what symptoms are present and under what conditions they occur. A Diagnostic Worksheet like the example on “Worksheet Sample” should be used.
Start your diagnosis by looking for conventional malfunctions first. This will help troubleshoot drivability malfunctions on an electronically controlled engine vehicle.

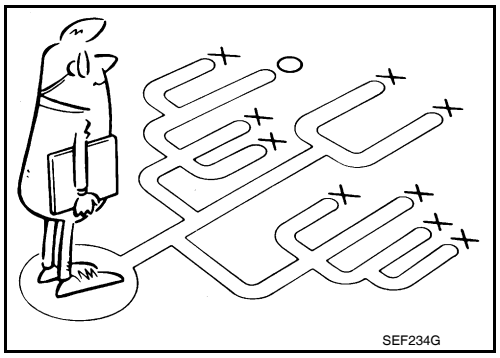

WORK FLOW

Overall Sequence

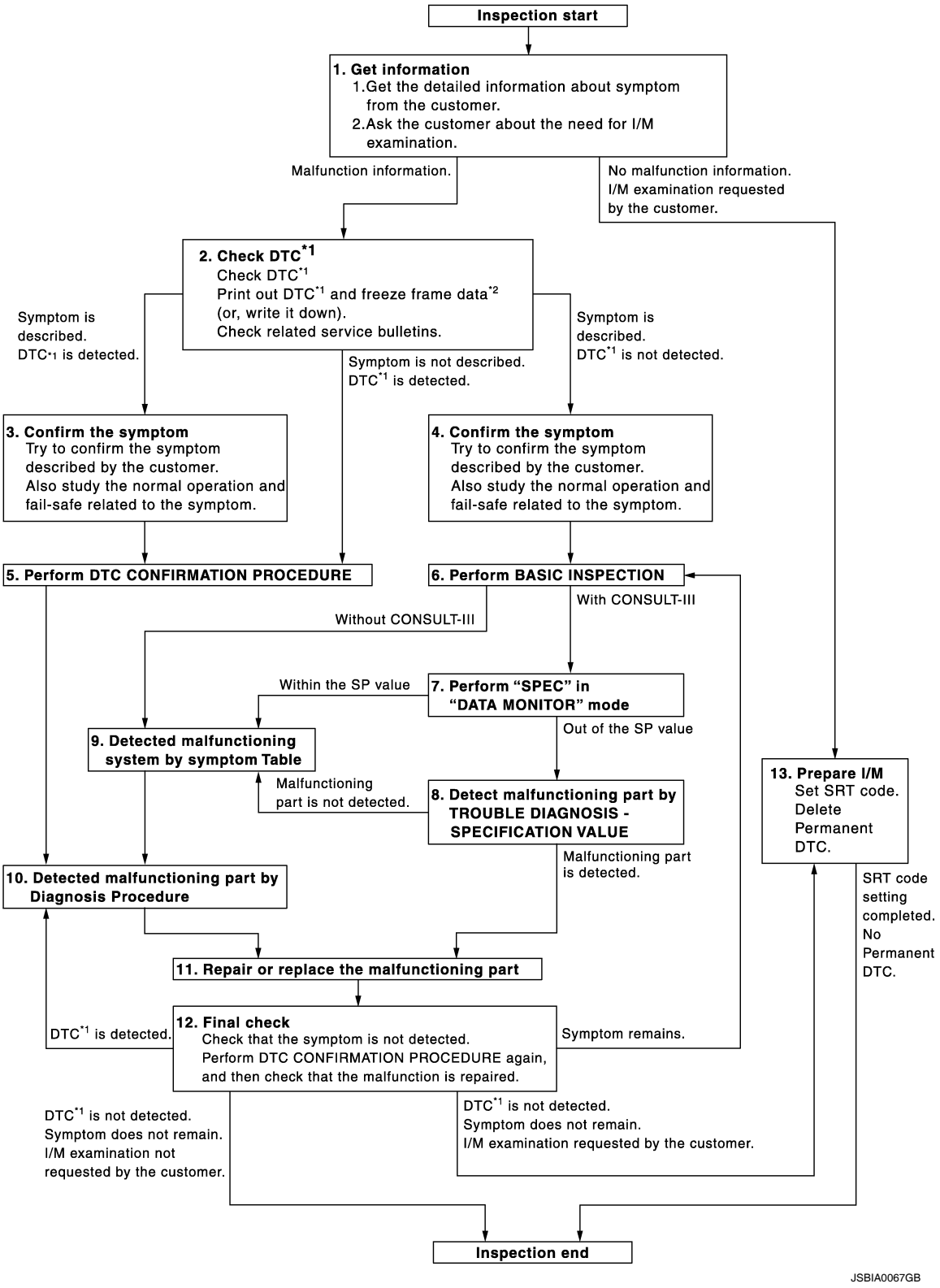

*1: Include 1st trip DTC.

*2: Include 1st trip freeze frame data.

Detailed Flow

1.GET INFORMATION FOR SYMPTOM

1. Get the detailed information from the customer about the symptom (the condition and the environment when the incident/malfunction occurred) using the “Diagnostic Work Sheet”.
2. Ask if the customer requests I/M examination.

Malfunction information, obtained>>GO TO 2.
No malfunction information, but a request for I/M examination>>GO TO 13.

2.CHECK DTC

1. Check DTC.
2. Perform the following procedure if DTC is displayed.
- Record DTC and freeze frame data. (Print them out with CONSULT-III or GST.)
- Erase DTC. (Refer to EC-62, "Emission-related Diagnostic Information".)
- Study the relationship between the cause detected by DTC and the symptom described by the customer. (Symptom Table is useful. Refer to EC-111, "Symptom Matrix Chart".)
3. Check related service bulletins for information.

Are any symptoms described and any DTCs detected?

Symptom is described, DTC is detected>>GO TO 3.
Symptom is described, DTC is not detected>>GO TO 4.
Symptom is not described, DTC is detected>>GO TO 5.

3.CONFIRM THE SYMPTOM

Try to confirm the symptom described by the customer (except MIL ON).
Also study the normal operation and fail-safe related to the symptom.
Diagnosis Work Sheet is useful to verify the incident.
Verify relation between the symptom and the condition when the symptom is detected.

>> GO TO 5.

4.CONFIRM THE SYMPTOM

Try to confirm the symptom described by the customer.
Also study the normal operation and fail-safe related to the symptom.
Diagnosis Work Sheet is useful to verify the incident.
Verify relation between the symptom and the condition when the symptom is detected.

>> GO TO 6.

5.PERFORM DTC CONFIRMATION PROCEDURE

Perform DTC CONFIRMATION PROCEDURE for the displayed DTC, and then make sure that DTC is detected again.
If two or more DTCs are detected, refer to EC-109, "DTC Inspection Priority Chart" and determine trouble diagnosis order.

NOTE:
- Freeze frame data is useful if the DTC is not detected.
- Perform Component Function Check if DTC CONFIRMATION PROCEDURE is not included on Service Manual. This simplified check procedure is an effective alternative though DTC cannot be detected during this check.
  If the result of Component Function Check is NG, it is the same as the detection of DTC by DTC CONFIRMATION PROCEDURE.

Is DTC detected?

YES >> GO TO 10.
NO >> Check according to EC-152, "Description".

6.PERFORM BASIC INSPECTION

Perform EC-93, "Basic Inspection".

Do you have CONSULT-III?

YES >> GO TO 7.
NO >> GO TO 9.

7. PERFORM SPEC IN DATA MONITOR MODE

With CONSULT-III
Make sure that “MAS A/F SE-B1”, “MAS A/F SE-B2”, “B/FUEL SCHDL”, “A/F ALPHA-B1”, and “A/F ALPHA-B2” are within the SP value using CONSULT-III “SPEC” in “DATA MONITOR” mode. Refer to EC-144, "Inspection Procedure".

Is the measurement value within the SP value?

YES >> GO TO 9.
NO >> GO TO 8.

8. DETECT MALFUNCTIONING PART BY TROUBLE DIAGNOSIS - SPECIFICATION VALUE

Detect malfunctioning part according to EC-144, "Diagnosis Procedure".

Is a malfunctioning part detected?

YES >> GO TO 11.
NO >> GO TO 9.

9. DETECT MALFUNCTIONING SYSTEM BY SYMPTOM TABLE

Detect malfunctioning system according to EC-111, "Symptom Matrix Chart" based on the confirmed symptom in step 4, and determine the trouble diagnosis order based on possible causes and symptoms.

>> GO TO 10.

10. DETECT MALFUNCTIONING PART BY DIAGNOSIS PROCEDURE

Inspect according to Diagnosis Procedure of the system.
NOTE:
The Diagnosis Procedure in EC section described based on open circuit inspection. A short circuit inspection is also required for the circuit check in the Diagnosis Procedure. For details, refer to GI-26, "How to Perform Efficient Diagnosis for an Electrical Incident".

Is a malfunctioning part detected?

YES >> GO TO 11.
NO >> Monitor input data from related sensors or check voltage of related ECM terminals using CONSULT-III. Refer to EC-124, "ECM Terminal and Reference Value", EC-140, "CONSULT-III Reference Value in Data Monitor".

11. REPAIR OR REPLACE THE MALFUNCTIONING PART

1. Repair or replace the malfunctioning part.
2. Reconnect parts or connectors disconnected during Diagnosis Procedure again after repair and replacement.
3. Check DTC. If DTC is displayed, erase it. Refer to EC-62, "Emission-related Diagnostic Information".

>> GO TO 12.

12. FINAL CHECK

When DTC was detected in step 2, perform DTC CONFIRMATION PROCEDURE or Component Function Check again, and then make sure that the malfunction have been completely repaired.
When symptom was described from the customer, refer to confirmed symptom in step 3 or 4, and make sure that the symptom is not detected.

Is DTC detected and does symptom remain?

YES-1 >> DTC is detected: GO TO 10.
YES-2 >> Symptom remains: GO TO 6.
NO-1 >> No request for I/M examination from the customer: Before returning the vehicle to the customer, always erase unnecessary DTC in ECM and TCM (Transmission Control Module). Refer to EC-62, "Emission-related Diagnostic Information".
NO-2 >> I/M examination, requested from the customer: GO TO 13.

13. PREPARE FOR I/M EXAMINATION

1. Set SRT codes. Refer to EC-62, "Emission-related Diagnostic Information".
2. Erase permanent DTCs. Refer to EC-62, "Emission-related Diagnostic Information".

>> INSPECTION END

DIAGNOSTIC WORKSHEET

Description

There are many operating conditions that lead to the malfunction of engine components. A good grasp of such conditions can make troubleshooting faster and more accurate.

In general, each customer feels differently about symptoms. It is important to fully understand the symptoms or conditions for a customer complaint.

Utilize a diagnostic worksheet like WORKSHEET SAMPLE below in order to organize all the information for troubleshooting.

Some conditions may cause the MIL to illuminate or blink and DTC to be detected. Examples:

- Vehicle ran out of fuel, which caused the engine to misfire.
- Fuel filler cap was left off or incorrectly screwed on, allowing fuel to evaporate into the atmosphere.

KEY POINTS

WHAT ..... Vehicle & engine model
WHEN ..... Date, Frequencies
WHERE..... Road conditions
HOW ..... Operating conditions, Weather conditions, Symptoms

SEF907L

Worksheet Sample

Customer name MR/MS		Model & Year	VIN
Engine #		Trans.	Mileage
Incident Date		Manuf. Date	In Service Date
Fuel and fuel filler cap		☐ Vehicle ran out of fuel causing misfire ☐ Fuel filler cap was left off or incorrectly screwed on.	
Symptoms	☐ Startability	☐ Impossible to start ☐ No combustion ☐ Partial combustion ☐ Partial combustion affected by throttle position ☐ Partial combustion NOT affected by throttle position ☐ Possible but hard to start ☐ Others [ ]	
	☐ Idling	☐ No fast idle ☐ Unstable ☐ High idle ☐ Low idle ☐ Others [ ]	
	☐ Driveability	☐ Stumble ☐ Surge ☐ Knock ☐ Lack of power ☐ Intake backfire ☐ Exhaust backfire ☐ Others [ ]	
	☐ Engine stall	☐ At the time of start ☐ While idling ☐ While accelerating ☐ While decelerating ☐ Just after stopping ☐ While loading	
Incident occurrence		☐ Just after delivery ☐ Recently ☐ In the morning ☐ At night ☐ In the daytime	
Frequency		☐ All the time ☐ Under certain conditions ☐ Sometimes	
Weather conditions		☐ Not affected	
	Weather	☐ Fine ☐ Raining ☐ Snowing ☐ Others [ ]	
	Temperature	☐ Hot ☐ Warm ☐ Cool ☐ Cold ☐ Humid ˚F	
Engine conditions		☐ Cold ☐ During warm-up ☐ After warm-up Engine speed 0 2,000 4,000 6,000 8,000 rpm	
Road conditions		☐ In town ☐ In suburbs ☐ Highway ☐ Off road (up/down)	
Driving conditions		☐ Not affected ☐ At starting ☐ While idling ☐ At racing ☐ While accelerating ☐ While cruising ☐ While decelerating ☐ While turning (RH/LH) Vehicle speed 0 10 20 30 40 50 60 MPH	
Malfunction indicator lamp		☐ Turned on ☐ Not turned on	

MTBL0017

DTC Inspection Priority Chart

INFOID:0000000005285747

If some DTCs are displayed at the same time, perform inspections one by one based on the following priority chart.

Priority	Detected items (DTC)
1	• U0101 U0140 U1001 CAN communication line • P0101 P0102 P0103 Mass air flow sensor • P0112 P0113 P0127 Intake air temperature sensor • P0116 P0117 P0118 P0125 Engine coolant temperature sensor • P0122 P0123 P0222 P0223 P1225 P1226 P2135 Throttle position sensor • P0128 Thermostat function • P0181 P0182 P0183 Fuel tank temperature sensor • P0327 P0328 Knock sensor • P0335 Crankshaft position sensor (POS) • P0340 Camshaft position sensor (PHASE) • P0460 P0461 P0462 P0463 Fuel level sensor • P0500 Vehicle speed sensor • P0605 P0607 ECM • P0643 Sensor power supply • P0705 Transmission range switch • P0850 Park/Neutral position (PNP) switch • P1610 - P1615 NATS • P2122 P2123 P2127 P2128 P2138 Accelerator pedal position sensor
2	• P0031 P0032 P0051 P0052 Air fuel ratio (A/F) sensor 1 heater • P0037 P0038 P0057 P0058 Heated oxygen sensor 2 heater • P0075 Intake valve timing control solenoid valve • P0130 P0131 P0132 P0133 P0150 P0151 P0152 P0153 P2A00 P2A03 Air fuel ratio (A/F) sensor 1 • P0137 P0138 P0139 P0157 P0158 P0159 Heated oxygen sensor 2 • P0441 EVAP control system purge flow monitoring • P0443 P0444 P0445 EVAP canister purge volume control solenoid valve • P0447 P0448 EVAP canister vent control valve • P0451 P0452 P0453 EVAP control system pressure sensor • P0603 ECM power supply • P0710 P0715 P0720 P0740 P0744 P0745 P0746 P0776 P0778 P0840 P1740 CVT related sensors, solenoid valves and switches • P1217 Engine over temperature (OVERHEAT) • P1777 P1778 CVT step motor • P1805 Brake switch • P2100 P2103 Throttle control motor relay • P2101 Electric throttle control function • P2118 Throttle control motor
3	• P0011 Intake valve timing control • P0171 P0172 P0174 P0175 Fuel injection system function • P0300 - P0304 Misfire • P0420 P0430 Three way catalyst function • P0442 P0456 EVAP control system (SMALL LEAK, VERY SMALL LEAK) • P0455 EVAP control system (GROSS LEAK) • P0506 P0507 Idle speed control system • P1148 P1168 Closed loop control • P1212 TCS communication line • P1421 Cold start control • P1564 ASCD steering switch • P1572 ASCD brake switch • P1574 ASCD vehicle speed sensor • P1715 Input speed sensor • P2119 Electric throttle control actuator

Fail-safe Chart

INFOID:0000000005285748

When the DTC listed below is detected, the ECM enters fail-safe mode and the MIL illuminates.

DTC No.	Detected items	Engine operating condition in fail-safe mode
P0102 P0103	Mass air flow sensor circuit	Engine speed will not rise more than 2,400 rpm due to the fuel cut.
P0117 P0118	Engine coolant temperature sensor circuit	Engine coolant temperature will be determined by ECM based on the following condition. CONSULT-III displays the engine coolant temperature decided by ECM. Condition: Engine coolant temperature decided (CONSULT-III display) Just as ignition switch is turned ON or START: 40°C (104°F) Approx. 4 minutes or more after engine starting: 80°C (176°F) Except as shown above: 40 - 80°C (104 - 176°F) (Depends on the time) When the fail-safe system for engine coolant temperature sensor is activated, the cooling fan operates while engine is running.
P0122 P0123 P0222 P0223 P2135	Throttle position sensor	The ECM controls the electric throttle control actuator in regulating the throttle opening in order for the idle position to be within +10 degrees. The ECM regulates the opening speed of the throttle valve to be slower than the normal condition. So, the acceleration will be poor.
P0643	Sensor power supply	ECM stops the electric throttle control actuator control, throttle valve is maintained at a fixed opening (approx. 5 degrees) by the return spring.
P2100 P2103	Throttle control relay	ECM stops the electric throttle control actuator control, throttle valve is maintained at a fixed opening (approx. 5 degrees) by the return spring.
P2101	Electric throttle control function	ECM stops the electric throttle control actuator control, throttle valve is maintained at a fixed opening (approx. 5 degrees) by the return spring.
P2118	Throttle control motor	ECM stops the electric throttle control actuator control, throttle valve is maintained at a fixed opening (approx. 5 degrees) by the return spring.
P2119	Electric throttle control actuator	(When electric throttle control actuator does not function properly due to the return spring malfunction:) ECM controls the electric throttle actuator by regulating the throttle opening around the idle position. The engine speed will not rise more than 2,000 rpm. (When throttle valve opening angle in fail-safe mode is not in specified range:) ECM controls the electric throttle control actuator by regulating the throttle opening to 20 degrees or less. (When ECM detects the throttle valve is stuck open:) While the vehicle is driving, it slows down gradually by fuel cut. After the vehicle stops, the engine stalls. The engine can restart in N or P (CVT), Neutral (M/T) position, and engine speed will not exceed 1,000 rpm or more.
P2122 P2123 P2127 P2128 P2138	Accelerator pedal position sensor	The ECM controls the electric throttle control actuator in regulating the throttle opening in order for the idle position to be within +10 degrees. The ECM regulates the opening speed of the throttle valve to be slower than the normal condition. So, the acceleration will be poor.

- When there is an open circuit on MIL circuit, the ECM cannot warn the driver by illuminating MIL when there is malfunction on engine control system.
  Therefore, when electrical controlled throttle and part of ECM related diagnoses are continuously detected as NG for 5 trips, ECM warns the driver that engine control system malfunctions and MIL circuit is open by means of operating fail-safe function.
  The fail-safe function also operates when above diagnoses except MIL circuit are detected and demands the driver to repair the malfunction.

Engine operating condition in fail-safe mode	Engine speed will not rise more than 2,500 rpm due to the fuel cut

Symptom Matrix Chart

INFOID:0000000005285749

SYSTEM — BASIC ENGINE CONTROL SYSTEM

		SYMPTOM													Reference page
		HARD/NO START/RESTART (EXCP. HA)	ENGINE STALL	HESITATION/SURGING/FLAT SPOT	SPARK KNOCK/DETONATION	LACK OF POWER/POOR ACCELERATION	HIGH IDLE/LOW IDLE	ROUGH IDLE/HUNTING	IDLING VIBRATION	SLOW/NO RETURN TO IDLE	OVERHEATS/WATER TEMPERATURE HIGH	EXCESSIVE FUEL CONSUMPTION	EXCESSIVE OIL CONSUMPTION	BATTERY DEAD (UNDER CHARGE)	
Warranty symptom code		AA	AB	AC	AD	AE	AF	AG	AH	AJ	AK	AL	AM	HA	
Fuel	Fuel pump circuit	1	1	2	3	2		2	2			3		2	EC-1652
	Fuel pressure regulator system	3	3	4	4	4	4	4	4	4		4			EC-1195
	Fuel injector circuit	1	1	2	3	2		2	2			2			EC-1647
	Evaporative emission system	3	3	4	4	4	4	4	4	4		4			EC-1138
Air	Positive crankcase ventilation system	3	3	4	4	4	4	4	4	4		4	1		EC-1151
	Incorrect idle speed adjustment	3	3				1	1	1	1		1			EC-1187
	Electric throttle control actuator	1	1	2	3	3	2	2	2	2		2		2	EC-1584, EC-1588, EC-1594, EC-1599
Ignition	Incorrect ignition timing adjustment	3	3	1	1	1		1	1			1			EC-1187
	Ignition circuit	1	1	2	2	2		2	2			2			EC-1657
Power supply and ground circuit		2	2	3	3	3		3	3		2	3			EC-1246
Mass air flow sensor circuit		1	1	2	2	2		2	2			2			EC-1282, EC-1289
Engine coolant temperature sensor circuit		1	1	2	2	2	3	2	2	3	1	2			EC-1303, EC-1313
Throttle position sensor circuit			1	2		2	2	2	2	2		2			EC-1308, EC-1410, EC-1555, EC-1557, EC-1613
Accelerator pedal position sensor circuit				3	2	1	2			2					EC-1530, EC-1601, EC-1606, EC-1618
Air fuel ratio (A/F) sensor 1 circuit			1	2	3	2		2	2			2			EC-1321, EC-1329, EC-1337, EC-1345, EC-1625
Knock sensor circuit				2	2							3			EC-1421
Crankshaft position sensor (POS) circuit		2	2												EC-1425

	SYMPTOM													Reference page
	HARD/NO START/RESTART (EXCP. HA)	ENGINE STALL	HESITATION/SURGING/FLAT SPOT	SPARK KNOCK/DETONATION	LACK OF POWER/POOR ACCELERATION	HIGH IDLE/LOW IDLE	ROUGH IDLE/HUNTING	IDLING VIBRATION	SLOW/NO RETURN TO IDLE	OVERHEATS/WATER TEMPERATURE HIGH	EXCESSIVE FUEL CONSUMPTION	EXCESSIVE OIL CONSUMPTION	BATTERY DEAD (UNDER CHARGE)	
Warranty symptom code	AA	AB	AC	AD	AE	AF	AG	AH	AJ	AK	AL	AM	HA	
Camshaft position sensor (PHASE) circuit	2	2												EC-1431
Vehicle speed signal circuit		2	3		3						3			EC-1518, EC-1576
ECM	2	2	3	3	3	3	3	3	3	3	3			EC-1524, EC-1527
Intake valve timing control solenoid valve circuit	3	3	2		1	3	2	2	3		3			EC-1277
Park/neutral position (PNP) signal circuit			3		3	3	3	3	3		3			EC-1535
Refrigerant pressure sensor circuit		2				3	3	3	3		4			EC-1666
Electrical load signal circuit						3	3	3	3					EC-1645
Air conditioner circuit	2	2	3	3	3	3	3	3	3		3		2	MTC-27
ABS actuator and electric unit (control unit)			4											BRC-10

1 - 6: The numbers refer to the order of inspection.

(continued on next TABLE)

SYSTEM — ENGINE MECHANICAL & OTHER

		SYMPTOM													Reference page
		HARD/NO START/RESTART (EXCP. HA)	ENGINE STALL	HESITATION/SURGING/FLAT SPOT	SPARK KNOCK/DETONATION	LACK OF POWER/POOR ACCELERATION	HIGH IDLE/LOW IDLE	ROUGH IDLE/HUNTING	IDLING VIBRATION	SLOW/NO RETURN TO IDLE	OVERHEATS/WATER TEMPERATURE HIGH	EXCESSIVE FUEL CONSUMPTION	EXCESSIVE OIL CONSUMPTION	BATTERY DEAD (UNDER CHARGE)	
Warranty symptom code		AA	AB	AC	AD	AE	AF	AG	AH	AJ	AK	AL	AM	HA	
Fuel	Fuel tank	5	5												FL-10
	Fuel piping			5	5	5		5	5			5			EM-148
	Vapor lock														—
	Valve deposit	5		5	5	5		5	5			5			—
	Poor fuel (Heavy weight gasoline, Low octane)														—
Air	Air duct		5	5		5		5	5			5			EM-133
	Air cleaner														EM-133
	Air leakage from air duct (Mass air flow sensor —electric throttle control actuator)	5			5		5			5					EM-133
	Electric throttle control actuator														EM-135
	Air leakage from intake manifold/ Collector/Gasket														EM-135
Cranking	Battery	1	1	1		1		1	1			1		1	SC-5
	Generator circuit														SC-26
	Starter circuit	3													SC-11
	Signal plate/Flywheel/Drive plate	6													EM-188
	Park/neutral position (PNP) switch (M/T) Transmission range switch (CVT)	4													MT-64 (without LSD) or MT-141 (with LSD) CVT-60 (A/T)
Engine	Cylinder head	5	5	5	5	5		5	5			5			EM-175
	Cylinder head gasket										4		3		
	Cylinder block	6	6	6	6	6		6	6			6	4		EM-175
	Piston														
	Piston ring														
	Connecting rod														
	Bearing														
	Crankshaft														

		SYMPTOM													Reference page
		HARD/NO START/RESTART (EXCP. HA)	ENGINE STALL	HESITATION/SURGING/FLAT SPOT	SPARK KNOCK/DETONATION	LACK OF POWER/POOR ACCELERATION	HIGH IDLE/LOW IDLE	ROUGH IDLE/HUNTING	IDLING VIBRATION	SLOW/NO RETURN TO IDLE	OVERHEATS/WATER TEMPERATURE HIGH	EXCESSIVE FUEL CONSUMPTION	EXCESSIVE OIL CONSUMPTION	BATTERY DEAD (UNDER CHARGE)	
Warranty symptom code		AA	AB	AC	AD	AE	AF	AG	AH	AJ	AK	AL	AM	HA	
Valve mechanism	Timing chain	5	5	5	5	5		5	5			5			EM-164
	Camshaft														EM-153
	Intake valve timing control														EM-164
	Intake valve												3		EM-175
	Exhaust valve														
Exhaust	Exhaust manifold/Tube/Muffler/Gasket	5	5	5	5	5		5	5			5			EM-140, EX-11
	Three way catalyst														
Lubrication	Oil pan/Oil strainer/Oil pump/Oil filter/Oil gallery	5	5	5	5	5		5	5			5	2		EM-142, LU-20, LU-22, LU-16
	Oil level (Low)/Filthy oil														LU-18
Cooling	Radiator/Hose/Radiator filler cap	5	5	5	5	5		5	5		2	5			CO-44
	Thermostat									5					CO-51
	Water pump														CO-48
	Water gallery														CO-51
	Cooling fan									5					CO-46
	Coolant level (low)/Contaminated coolant														CO-39
NVIS (NISSAN Vehicle Immobilizer System — NATS)		1	1												BL-171

1 - 6: The numbers refer to the order of inspection.

Engine Control Component Parts Location

INFOID:0000000005285750

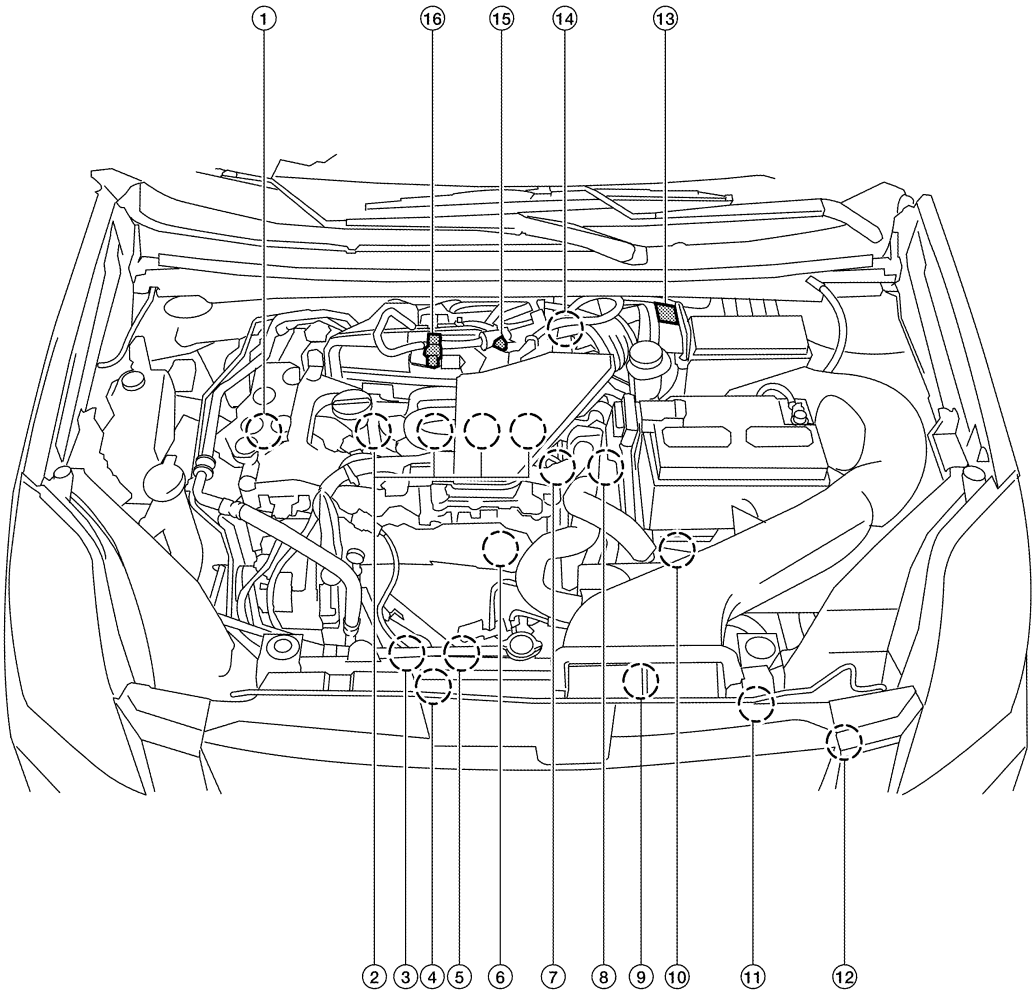

BBIA0896E

1. Intake valve timing control solenoid valve
2. Ignition coil (with power transistor) and spark plug,
3. A/F sensor 1 (Bank 1)
4. Cooling fan motor-1
5. A/F sensor 1 (Bank 2)
6. Knock sensor and crankshaft position sensor (POS)
7. Camshaft position sensor (PHASE)
8. Engine coolant temperature sensor
9. Cooling fan motor-2
10. ECM
11. Park/neutral position (PNP) switch (M/T)
    Transmission range switch (CVT)
12. Refrigerant pressure sensor
13. Mass air flow sensor
    (with intake air temperature sensor)
14. Electric throttle control actuator (with built in throttle position sensor, throttle control motor)
15. EVAP service port
16. EVAP canister purge volume control solenoid valve

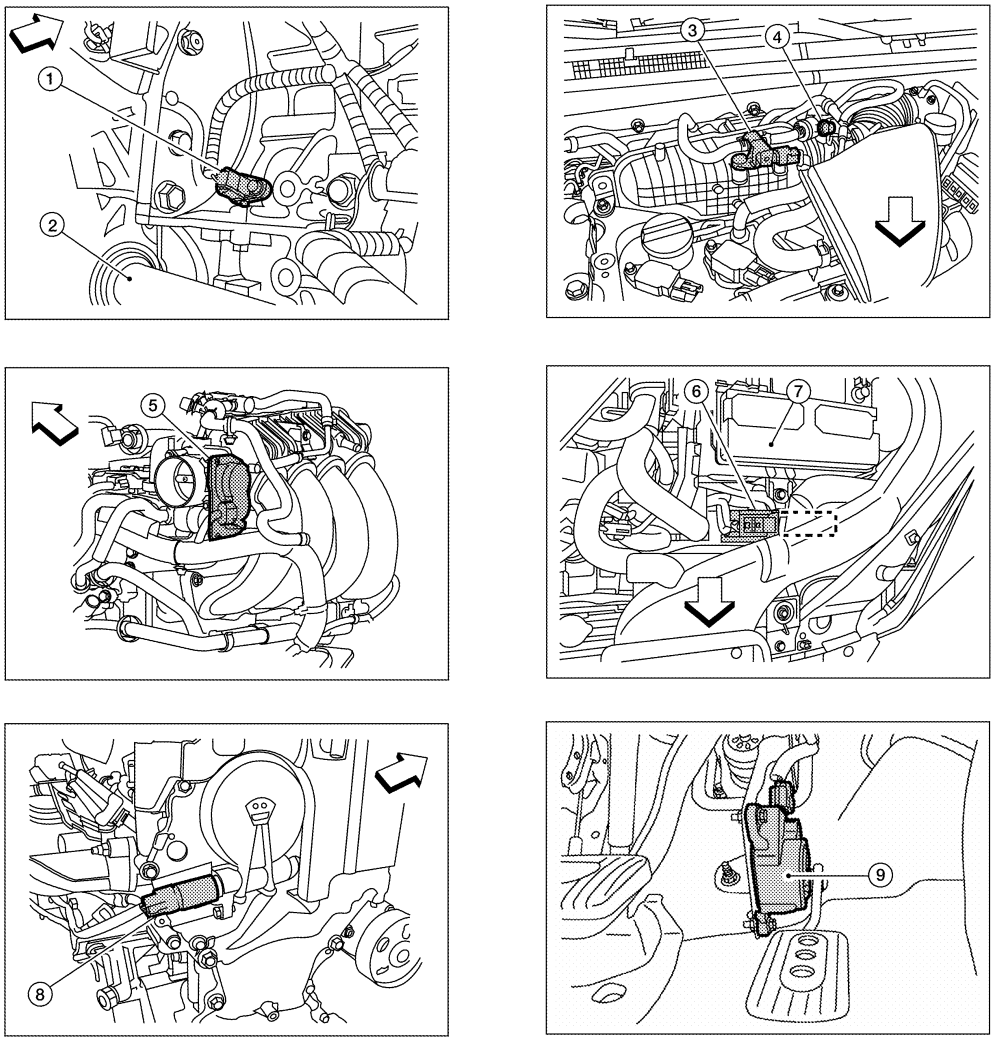

BBIA0928E

⇦ : Vehicle front

1. Crankshaft position sensor (POS)
2. Drive shaft (RH)
3. EVAP canister purge volume control solenoid valve
4. EVAP service port
5. Electric throttle control actuator
6. ECM
7. Battery
8. Intake valve timing control solenoid valve
9. Accelerator pedal position sensor

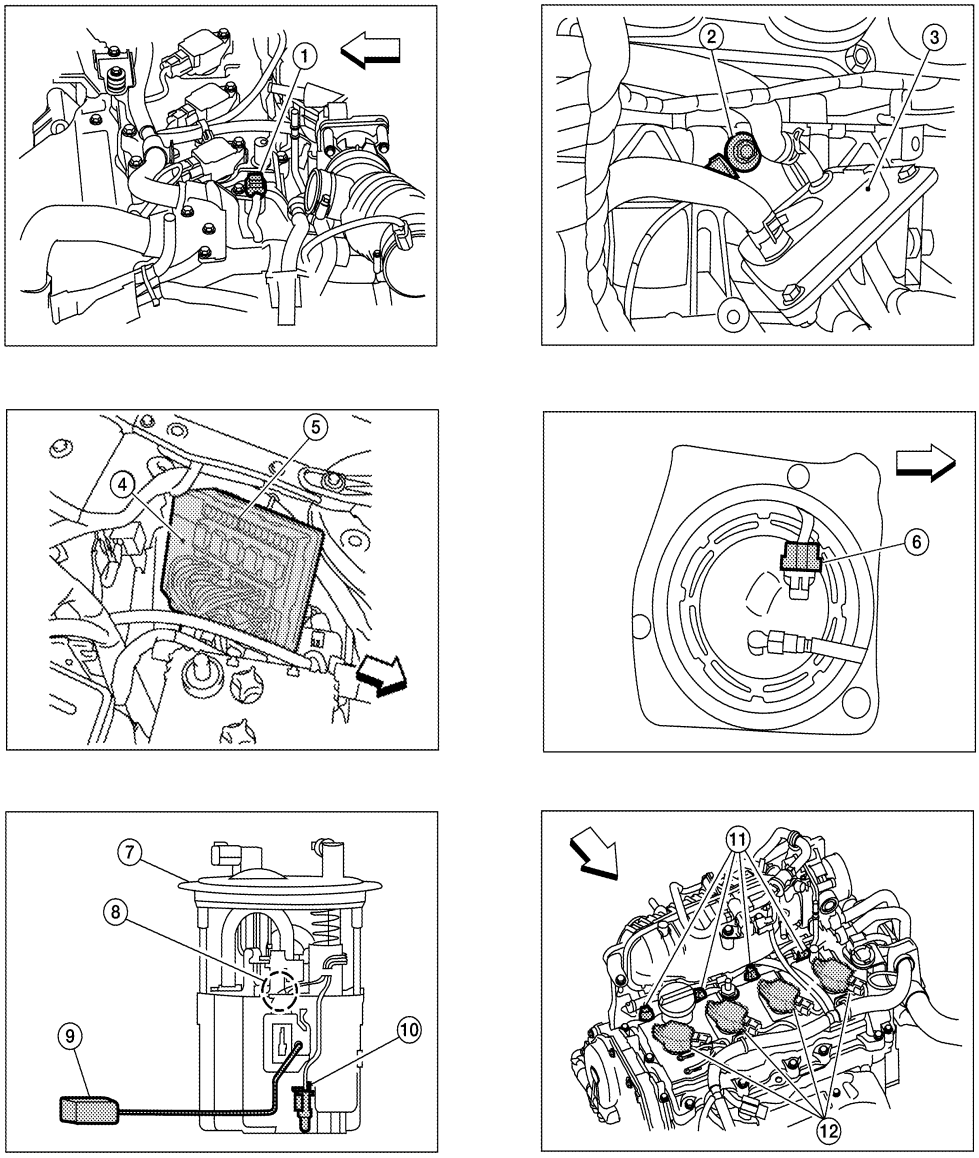

BBIA0929E

⇦ : Vehicle front

1. Camshaft position sensor (PHASE)
2. Knock sensor
3. Engine oil cooler
4. IPDM E/R
5. Fuel pump fuse
6. Fuel level sensor unit and fuel pump harness connector (view with inspection hole cover removed.)
7. Fuel level sensor unit and fuel pump assembly
8. Fuel pressure regulator
9. Fuel level sensor
10. Fuel tank temperature sensor
11. Fuel injector
12. Ignition coil (with power transistor) and spark plug

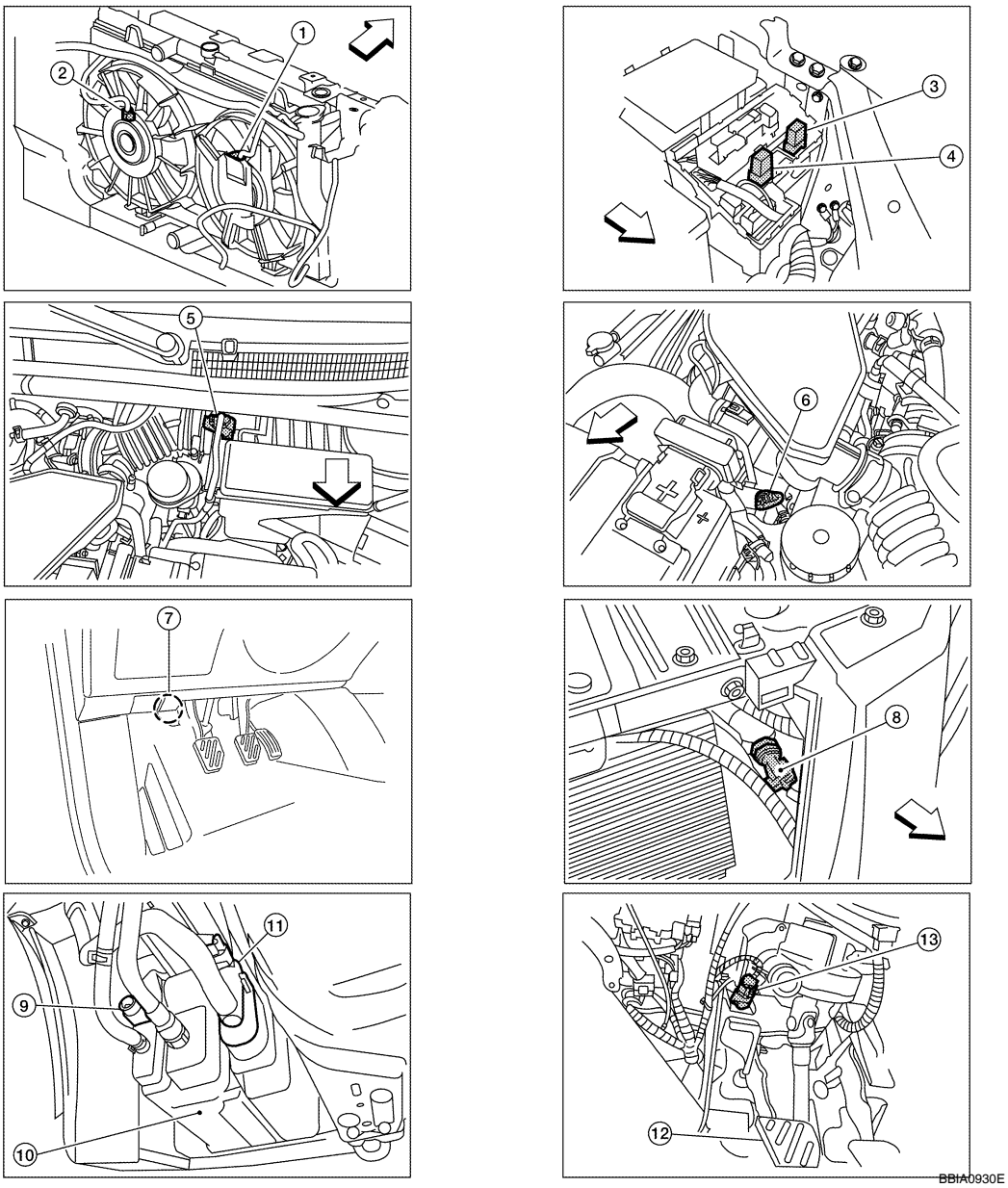

⇦: Vehicle front

1.	Cooling fan motor-1	2.	Cooling fan motor-2	3.	Cooling fan relay-5
4.	Cooling fan relay-4	5.	Mass air flow sensor (with intake air temperature sensor)	6.	Engine coolant temperature sensor
7.	Data link connector	8.	Refrigerant pressure sensor	9.	EVAP control system pressure sensor
10.	EVAP canister	11.	EVAP canister vent control valve	12.	Clutch pedal
13.	ASCD clutch switch				

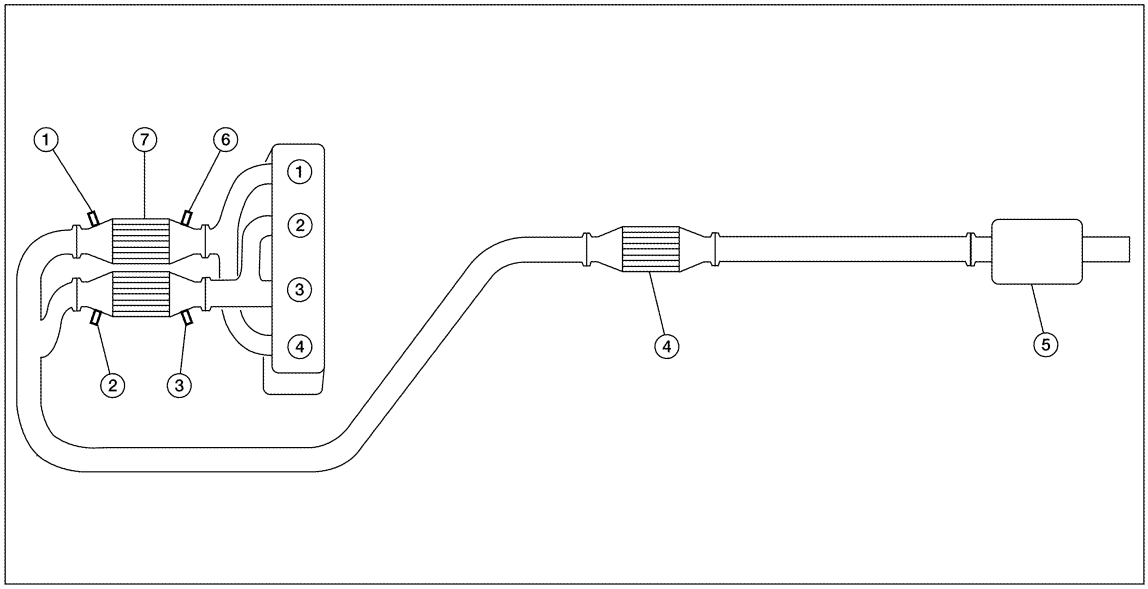

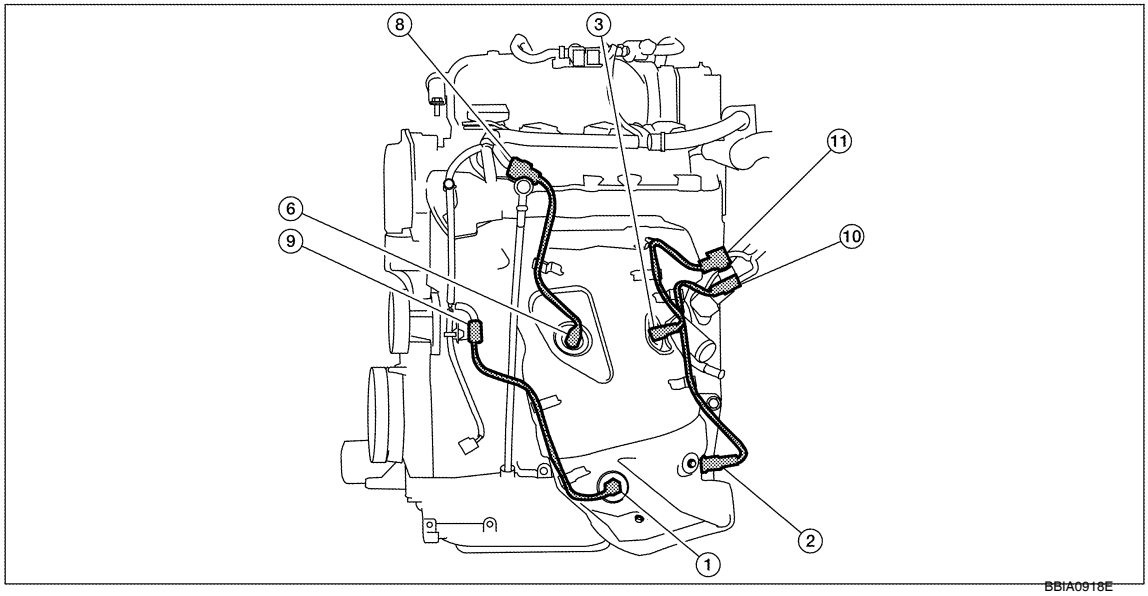

⇦ : Vehicle front

1. Heated oxygen sensor 2 (Bank 1)
2. Heated oxygen sensor 2 (Bank 2)
3. Air fuel ratio (A/F) sensor 1 (Bank 2)
4. Three-way catalyst (under floor)
5. Muffler
6. Air fuel ratio (A/F) sensor 1 (Bank 1)
7. Three-way catalyst (manifold)
8. Air fuel ratio (A/F) sensor 1 (Bank 1) harness connector
9. Heated oxygen sensor 2 (Bank 1) harness connector
10. Heated oxygen sensor 2 (Bank 2) harness connector
11. Air fuel ratio (A/F) sensor 1 (Bank 2) harness connector

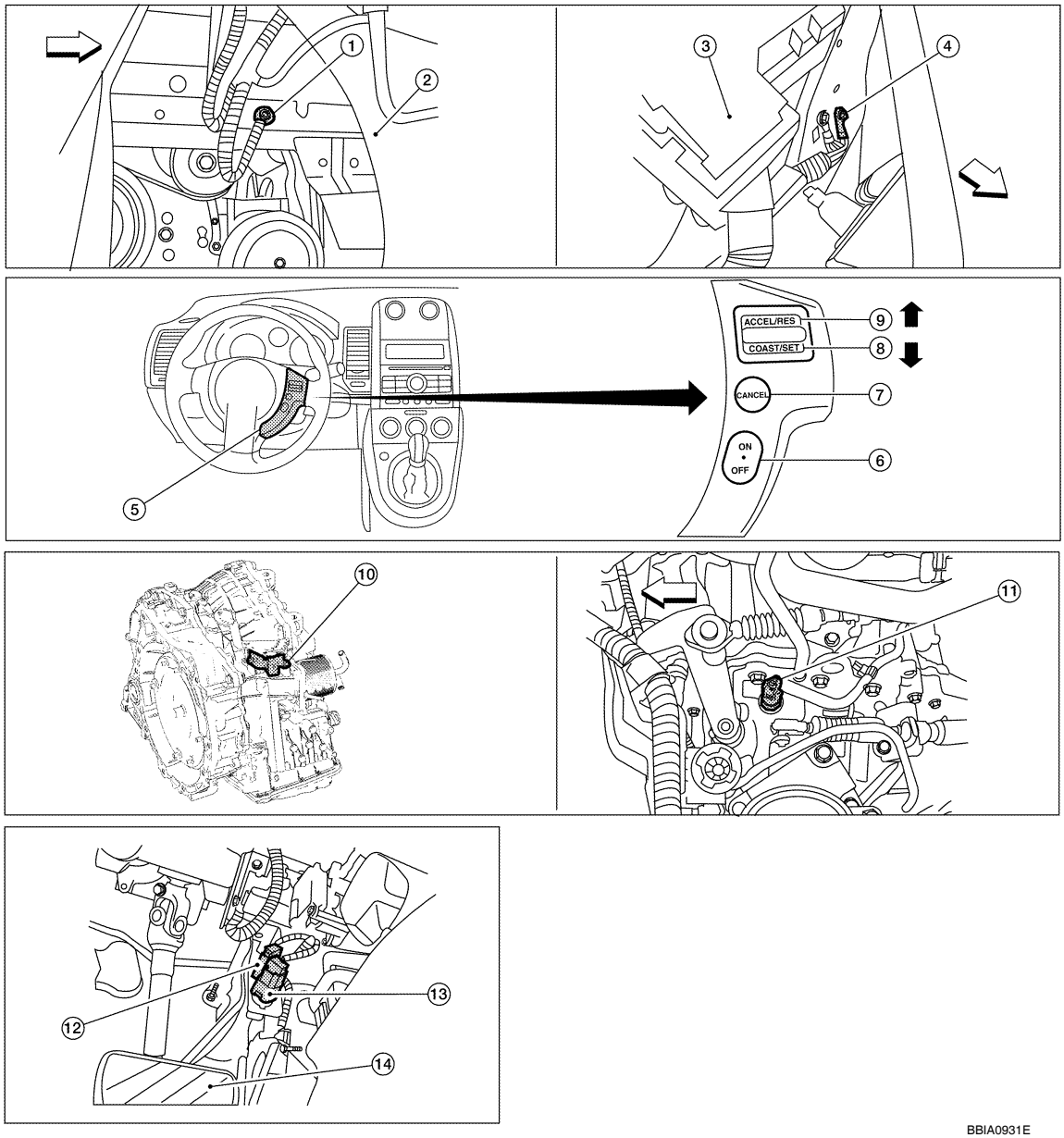

⇦ : Vehicle front

1. Body ground E9 (view with front RH and fender protect PH removed.)	2. Washer tank	3. Fuse and fusible link box
4. Body ground E15	5. ASCD steering switch	6. MAIN switch
7. CANCEL switch	8. SET/COAST switch	9. RESUME/ACCELERATOR switch
10. Transmission range switch (CVT models)	11. PNP switch (M/T models) (view with air cleaner assembly removed)	12. ASCD brake switch
13. Stop lamp switch	14. Brake pedal	

Vacuum Hose Drawing

INFOID:0000000005285751

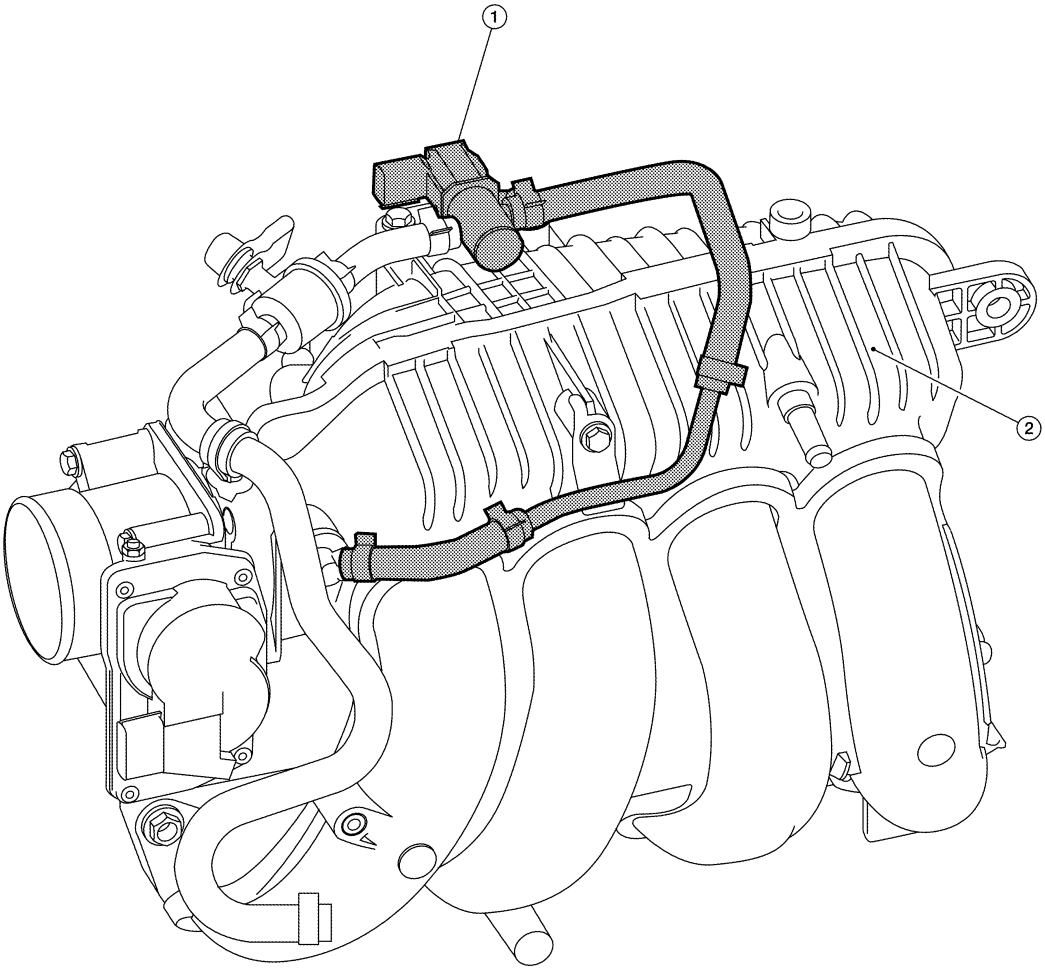

BBIA0897E

1. EVAP canister purge volume control solenoid valve
2. Intake manifold collector

NOTE:
Do not use soapy water or any type of solvent while installing vacuum hoses or purge hoses.
Refer to EC-1129, "Schematic" for Vacuum Control System.

Circuit Diagram

INFOID:0000000005285752

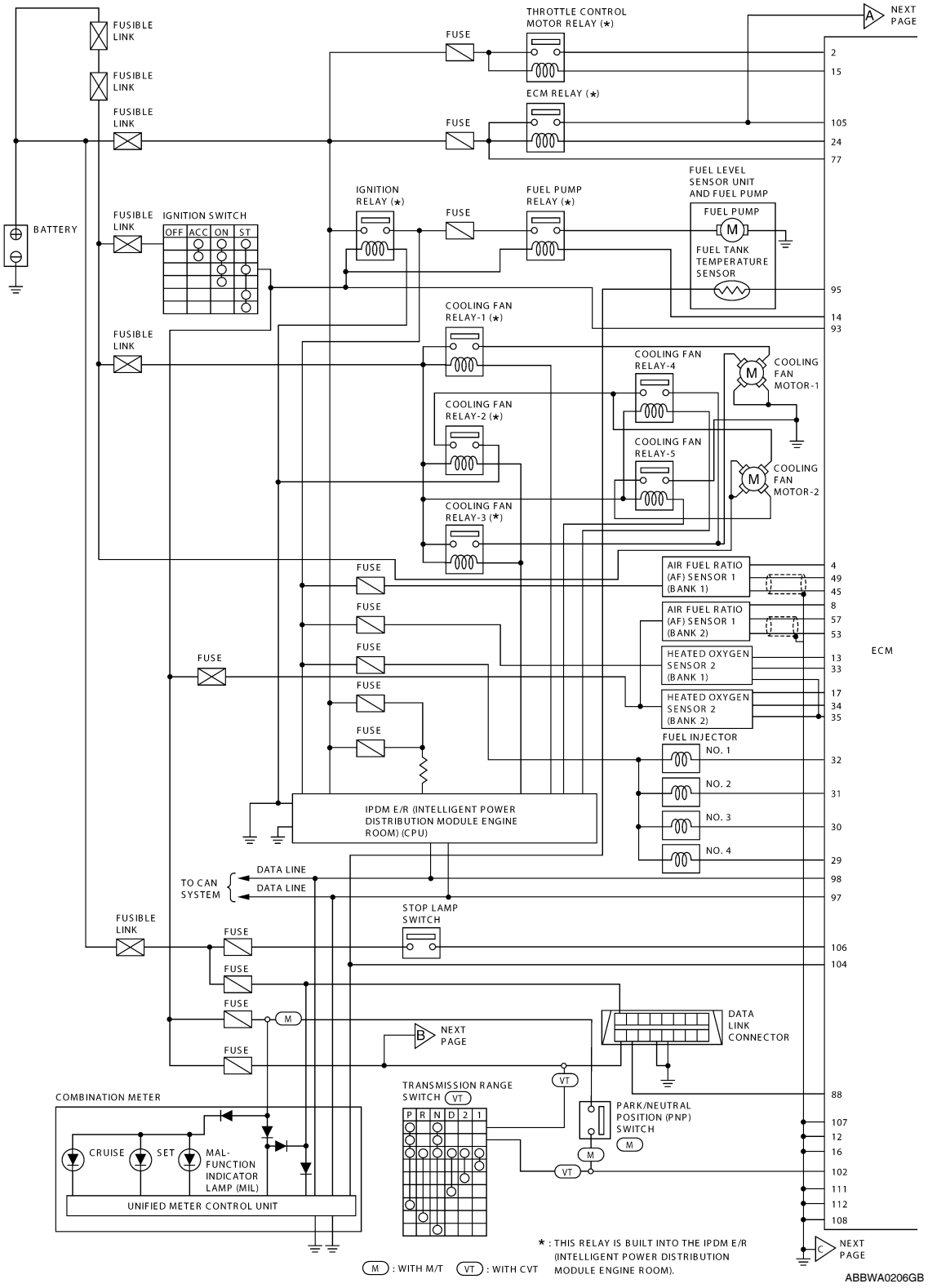

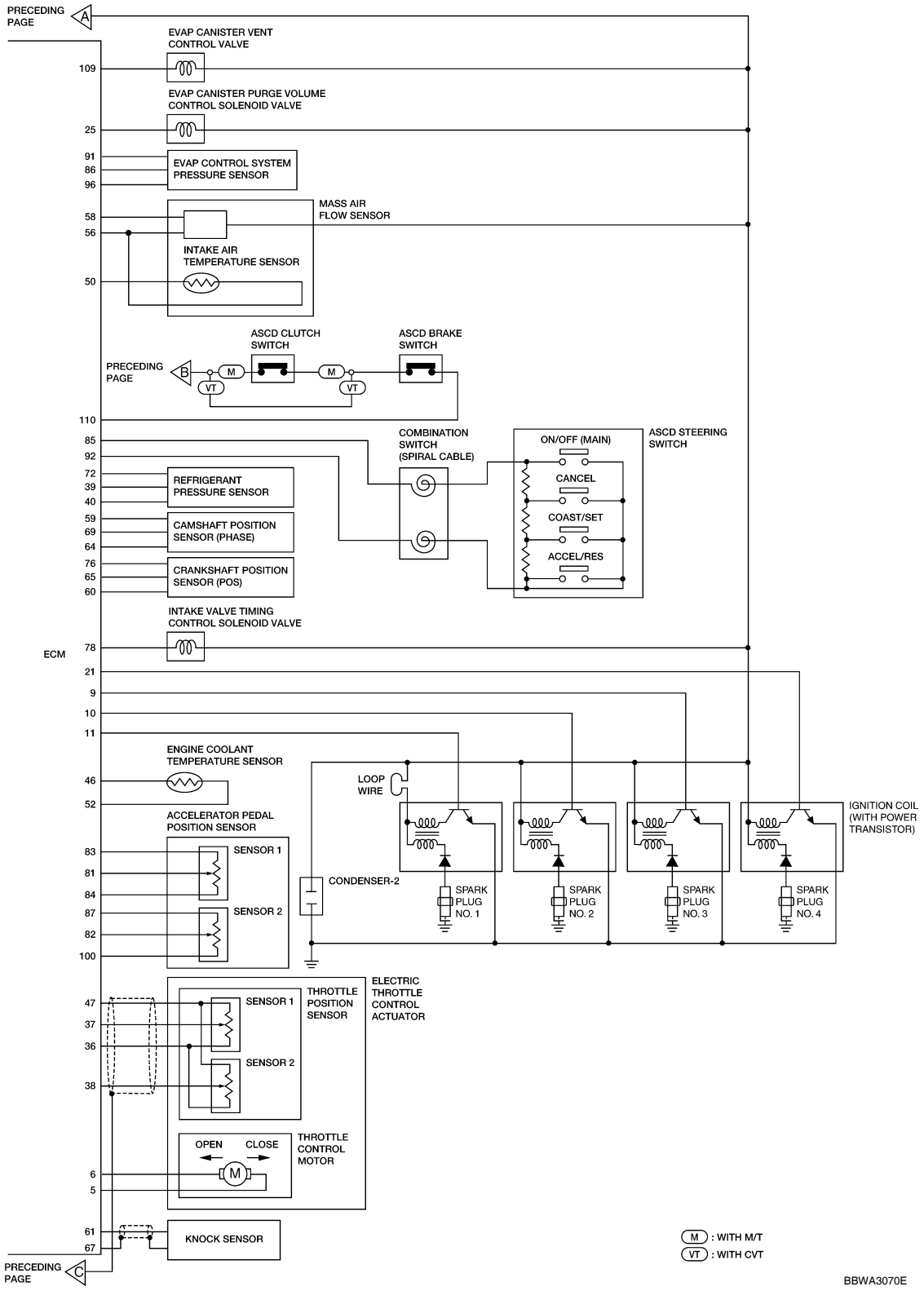
PRECEDING PAGE
A
EVAP CANISTER VENT CONTROL VALVE
109
EVAP CANISTER PURGE VOLUME CONTROL SOLENOID VALVE
25
91
86
96
EVAP CONTROL SYSTEM PRESSURE SENSOR
58
56
MASS AIR FLOW SENSOR
INTAKE AIR TEMPERATURE SENSOR
50
ASCD CLUTCH SWITCH
ASCD BRAKE SWITCH
PRECEDING PAGE
B
M
VT
M
VT
110
85
92
COMBINATION SWITCH (SPIRAL CABLE)
ON/OFF (MAIN)
ASCD STEERING SWITCH
CANCEL
COAST/SET
ACCEL/RES
72
39
40
REFRIGERANT PRESSURE SENSOR
59
69
64
CAMSHAFT POSITION SENSOR (PHASE)
76
65
60
CRANKSHAFT POSITION SENSOR (POS)
INTAKE VALVE TIMING CONTROL SOLENOID VALVE
ECM
78
21
9
10
11
ENGINE COOLANT TEMPERATURE SENSOR
46
52
LOOP WIRE
ACCELERATOR PEDAL POSITION SENSOR
83
81
84
87
82
100
SENSOR 1
SENSOR 2
CONDENSER-2
IGNITION COIL (WITH POWER TRANSISTOR)
SPARK PLUG NO. 1
SPARK PLUG NO. 2
SPARK PLUG NO. 3
SPARK PLUG NO. 4
47
37
36
38
SENSOR 1
SENSOR 2
THROTTLE POSITION SENSOR
ELECTRIC THROTTLE CONTROL ACTUATOR
OPEN
CLOSE
M
THROTTLE CONTROL MOTOR
6
5
61
67
KNOCK SENSOR
PRECEDING PAGE
C
M : WITH M/T
VT : WITH CVT
BBWA3070E

ECM Harness Connector Terminal Layout

INFOID:0000000005285753

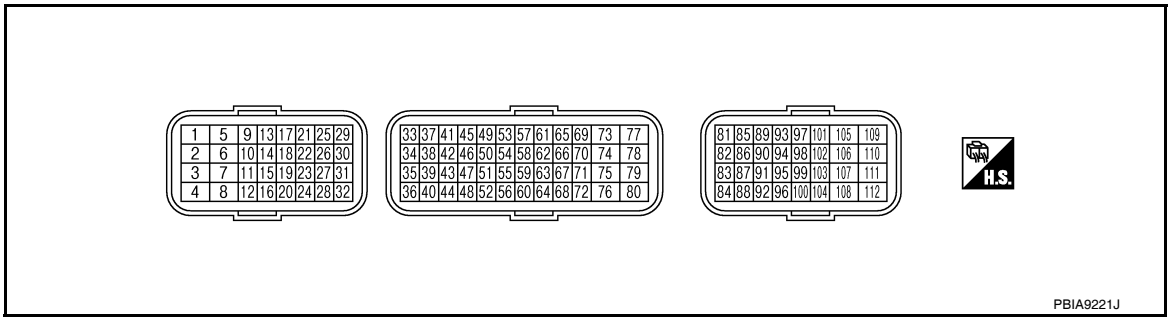

ECM Terminal and Reference Value

INFOID:0000000005285754

PREPARATION

ECM (1) is located in the engine room left side near battery.

- ⇦: Vehicle front
- Battery (2)

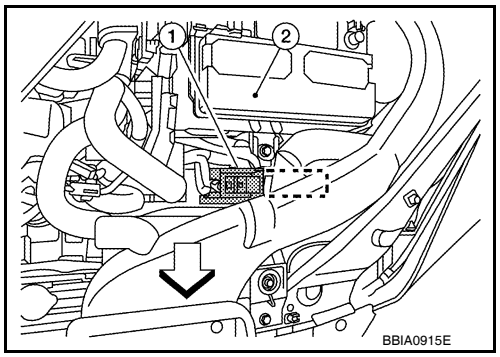

ECM INSPECTION TABLE

Specification data are reference values and are measured between each terminal and ground.
Pulse signal is measured by CONSULT-III.

CAUTION:

Never use ECM ground terminals when measuring input/output voltage. Doing so may result in damage to the ECMs transistor. Use a ground other than ECM terminals, such as the ground.

TERMINAL NO.	WIRE COLOR	ITEM	CONDITION	DATA (DC Voltage)
2	Y/B	Throttle control motor power supply	**[Ignition switch: ON]**	BATTERY VOLTAGE (11 - 14 V)
4	BR/W	A/F sensor 1 heater (Bank 1)	**[Engine is running]** • **Warm-up condition** • Idle speed (More than 140 seconds after starting engine)	Approximately 2.9 - 8.8 V★ 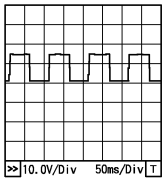 PBIA8148J
5	W	Throttle control motor (Open)	**[Ignition switch: ON]** • Engine stopped • Selector lever: D (CVT), 1st (M/T) • Accelerator pedal: Fully depressed	0 - 14 V★ 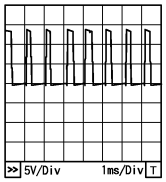 PBIA8150J

TERMINAL NO.	WIRE COLOR	ITEM	CONDITION	DATA (DC Voltage)
6	L/R	Throttle control motor (Close)	**[Ignition switch: ON]** • Engine stopped • Selector lever: D (CVT), 1st (M/T) • Accelerator pedal: Fully released	0 - 14 V★ 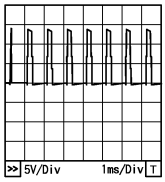 PBIA8149J
8	BR/Y	A/F sensor 1 heater (Bank 2)	**[Engine is running]** • **Warm-up condition** • Idle speed (More than 140 seconds after starting engine)	Approximately 2.9 - 8.8 V★ 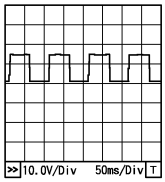 PBIA8148J
9 10 11 21	Y BR/Y V G	Ignition signal No. 3 Ignition signal No. 2 Ignition signal No. 1 Ignition signal No. 4	**[Engine is running]** • **Warm-up condition** • Idle speed **NOTE:** The pulse cycle changes depending on rpm at idle.	0 - 0.1 V★ 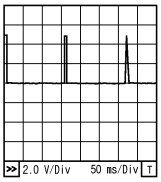 PBIA9265J
			[Engine is running] • **Warm-up condition** • Engine speed: 2,500 rpm.	0 - 0.2 V★ 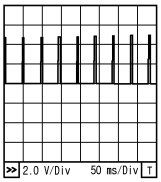 PBIA9266J
12 16	B B	ECM ground	**[Engine is running]** • Idle speed	Body ground
13	B	Heated oxygen sensor 2 heater (Bank 1)	**[Engine is running]** • Engine speed: Below 3,600 rpm after the following conditions are met. - Engine: After warming up - Keeping the engine speed between 3,500 and 4,000 rpm for 1 minute and at idle for 1 minute under no load.	Approximately 10 V★ 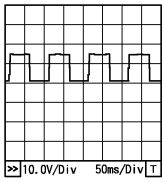 PBIA8148J
			[Ignition switch: ON] • Engine stopped **[Engine is running]** • Engine speed: Above 3,600 rpm.	BATTERY VOLTAGE (11 - 14 V)
14	B/O	Fuel pump relay	**[Ignition switch: ON]** • For 1 second after turning ignition switch ON **[Engine is running]**	0 - 1.0 V
			[Ignition switch: ON] • More than 1 second after turning ignition switch ON	BATTERY VOLTAGE (11 - 14 V)

TERMINAL NO.	WIRE COLOR	ITEM	CONDITION	DATA (DC Voltage)
15	G/Y	Throttle control motor relay	**[Ignition switch: OFF]**	BATTERY VOLTAGE (11 - 14 V)
			[Ignition switch: ON]	0 - 1.0 V
17	R/L	Heated oxygen sensor 2 heater (Bank 2)	**[Engine is running]** • Engine speed: Below 3,600 rpm after the following conditions are met. - Engine: After warming up - Keeping the engine speed between 3,500 and 4,000 rpm for 1 minute and at idle for 1 minute under no load.	Approximately 10 V★ 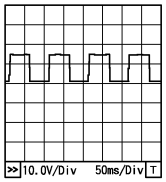 PBIA8148J
			[Ignition switch: ON] • Engine stopped **[Engine is running]** • Engine speed: Above 3,600 rpm.	BATTERY VOLTAGE (11 - 14 V)
24	R/B	ECM relay (Self shut-off)	**[Engine is running]** **[Ignition switch: OFF]** • For a few seconds after turning ignition switch OFF	0 - 1.0 V
			[Ignition switch: OFF] • More than a few seconds after turning ignition switch OFF	BATTERY VOLTAGE (11 - 14 V)
25	W/B	EVAP canister purge volume control solenoid valve	**[Engine is running]** • Idle speed • Accelerator pedal: Not depressed even slightly, after engine starting.	BATTERY VOLTAGE (11 - 14 V)★ 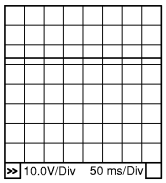 PBIB0050E
			[Engine is running] • Engine speed: Approx. 2,000 rpm (More than 100 seconds after starting engine)	BATTERY VOLTAGE (11 - 14 V)★ 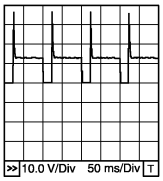 PBIB0520E

TERMINAL NO.	WIRE COLOR	ITEM	CONDITION	DATA (DC Voltage)
29 30 31 32	R O GR L	Fuel injector No. 4 Fuel injector No. 3 Fuel injector No. 2 Fuel injector No. 1	**[Engine is running]** • **Warm-up condition** • Idle speed **NOTE:** The pulse cycle changes depending on rpm at idle.	BATTERY VOLTAGE (11 - 14 V)★ 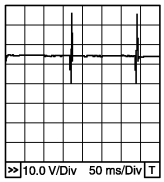 PBIB0529E
			[Engine is running] • **Warm-up condition** • Engine speed: 2,000 rpm	BATTERY VOLTAGE (11 - 14 V)★ 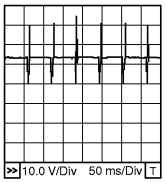 PBIA4943J
33	G	Heated oxygen sensor 2 (Bank 1)	**[Engine is running]** • Revving engine from idle to 3,000 rpm quickly after the following conditions are met. - Engine: After warming up - Keeping the engine speed between 3,500 and 4,000 rpm for 1 minute and at idle for 1 minute under no load.	0 - Approximately 1.0 V
34	W	Heated oxygen sensor 2 (Bank 2)	**[Engine is running]** • Revving engine from idle to 3,000 rpm quickly after the following conditions are met. - Engine: After warming up - Keeping the engine speed between 3,500 and 4,000 rpm for 1 minute and at idle for 1 minute under no load.	0 - Approximately 1.0 V
35	B	Sensor ground (Heated oxygen sensor 2)	**[Engine is running]** • **Warm-up condition** • Idle speed	Approximately 0 V
36	G	Sensor ground (Throttle position sensor)	**[Engine is running]** • **Warm-up condition** • Idle speed	Approximately 0 V
37	R	Throttle position sensor 1	**[Ignition switch: ON]** • Engine stopped • Selector lever: D (CVT), 1st (M/T) • Accelerator pedal: Fully released	More than 0.36 V
			[Ignition switch: ON] • Engine stopped • Selector lever: D (CVT), 1st (M/T) • Accelerator pedal: Fully depressed	Less than 4.75 V
38	W	Throttle position sensor 2	**[Ignition switch: ON]** • Engine stopped • Selector lever: D (CVT), 1st (M/T) • Accelerator pedal: Fully released	Less than 4.75 V
			[Ignition switch: ON] • Engine stopped • Selector lever: D (CVT), 1st (M/T) • Accelerator pedal: Fully depressed	More than 0.36 V

TERMINAL NO.	WIRE COLOR	ITEM	CONDITION	DATA (DC Voltage)
39	L	Refrigerant pressure sensor	**[Engine is running]** • **Warm-up condition** • Both A/C switch and blower fan switch: ON (Compressor operates)	1.0 - 4.0 V
40	R/G	Sensor ground (Refrigerant pressure sensor)	**[Engine is running]** • **Warm-up condition** • Idle speed	Approximately 0 V
45	W	A/F sensor 1 (Bank 1)	**[Engine is running]** • **Warm-up condition** • Engine speed: 2,000 rpm	Approximately 1.8 V Output voltage varies with air fuel ratio.
46	P	Engine coolant temperature sensor	**[Engine is running]**	Approximately 0 - 4.8 V Output voltage varies with engine coolant temperature.
47	B	Sensor power supply (Throttle position sensor)	**[Ignition switch: ON]**	Approximately 5 V
49	B	A/F sensor 1 (Bank 1)	**[Ignition switch: ON]**	Approximately 2.2 V
50	BR/Y	Intake air temperature sensor	**[Engine is running]**	Approximately 0 - 4.8 V Output voltage varies with intake air temperature.
52	GR	Sensor ground (Engine coolant temperature sensor)	**[Engine is running]** • **Warm-up condition** • Idle speed	Approximately 0 V
53	W	A/F sensor 1 (Bank 2)	**[Engine is running]** • **Warm-up condition** • Engine speed: 2,000 rpm	Approximately 1.8 V Output voltage varies with air fuel ratio.
56	B	Sensor ground	**[Engine is running]** • **Warm-up condition** • Idle speed	Approximately 0 V
57	R	A/F sensor 1 (Bank 2)	**[Ignition switch: ON]**	Approximately 2.2 V
58	V	Mass air flow sensor	**[Engine is running]** • **Warm-up condition** • Idle speed	0.9 - 1.1 V
			[Engine is running] • **Warm-up condition** • Engine speed: 2,500 rpm	1.4 - 1.7 V
59	G/Y	Sensor power supply [Camshaft position sensor (PHASE)]	**[Ignition switch: ON]**	Approximately 5 V
60	B	Sensor ground [Crankshaft position sensor (POS)]	**[Engine is running]** • **Warm-up condition** • Idle speed	Approximately 0 V
61	W	Knock sensor	**[Engine is running]** • Idle speed	Approximately 2.5V
64	B	Sensor ground [Camshaft position sensor (PHASE)]	**[Engine is running]** • **Warm-up condition** • Idle speed	Approximately 0 V

TERMINAL NO.	WIRE COLOR	ITEM	CONDITION	DATA (DC Voltage)
65	Y	Crankshaft position sensor (POS)	**[Engine is running]** • **Warm-up condition** • Idle speed **NOTE:** The pulse cycle changes depending on rpm at idle.	Approximately 4.0 V★ 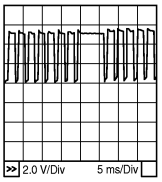 PBIB2998E
			[Engine is running] • Engine speed: 2,000 rpm	Approximately 4.0 V★ 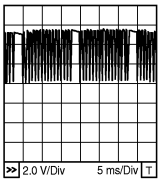 PBIB2999E
67	GR	Sensor ground (Knock sensor)	**[Engine is running]** • **Warm-up condition** • Idle speed	Approximately 0 V
69	R	Camshaft position sensor (PHASE)	**[Engine is running]** • **Warm-up condition** • Idle speed **NOTE:** The pulse cycle changes depending on rpm at idle.	1.0 - 2.0 V★ 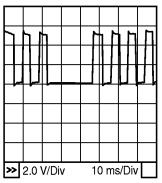 PBIB2986E
			[Engine is running] • Engine speed: 2,000 rpm.	1.0 - 2.0 V★ 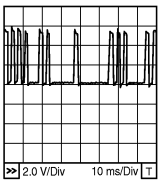 PBIB2987E
72	G/W	Sensor power supply (Refrigerant pressure sensor)	**[Ignition switch: ON]**	Approximately 5 V
76	G/R	Sensor power supply [Crankshaft position sensor (POS)]	**[Ignition switch: ON]**	Approximately 5 V
77	Y/R	Power supply for ECM (Back-up)	**[Ignition switch: OFF]**	BATTERY VOLTAGE (11 - 14 V)
78	Y/R	Intake valve timing control solenoid valve	**[Engine is running]** • **Warm-up condition** • Idle speed	BATTERY VOLTAGE (11 - 14 V)
			[Engine is running] • **Warm-up condition** • When revving engine up to 2,000 rpm quickly	7 - 10 V★ 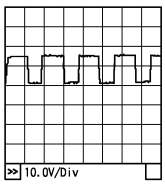 PBIA4937J

TERMINAL NO.	WIRE COLOR	ITEM	CONDITION	DATA (DC Voltage)
81	W	Accelerator pedal position sensor 1	**[Ignition switch: ON]** • Engine stopped • Accelerator pedal: Fully released	0.6 - 0.9 V
			[Ignition switch: ON] • Engine stopped • Accelerator pedal: Fully depressed	3.9 - 4.7 V
82	Y/G	Accelerator pedal position sensor 2	**[Ignition switch: ON]** • Engine stopped • Accelerator pedal: Fully released	0.3 - 0.6 V
			[Ignition switch: ON] • Engine stopped • Accelerator pedal: Fully depressed	1.95 - 2.4 V
83	O	Sensor power supply (Accelerator pedal position sensor 1)	**[Ignition switch: ON]**	Approximately 5 V
84	B/W	Sensor ground (Accelerator pedal position sensor 1)	**[Engine is running]** • **Warm-up condition** • Idle speed	Approximately 0 V
85	L/Y	ASCD steering switch	**[Ignition switch: ON]** • ASCD steering switch: OFF	Approximately 4 V
			[Ignition switch: ON] • MAIN switch: Pressed	Approximately 0 V
			[Ignition switch: ON] • CANCEL switch: Pressed	Approximately 1 V
			[Ignition switch: ON] • RESUME/ACCELERATE switch: Pressed	Approximately 3 V
			[Ignition switch: ON] • SET/COAST switch: Pressed	Approximately 2 V
86	R/B	EVAP control system pressure sensor	**[Ignition switch: ON]**	Approximately 1.8 - 4.8 V
87	BR/Y	Sensor power supply (Accelerator pedal position sensor 2)	**[Ignition switch: ON]**	Approximately 5 V
88	P/L	DATA link connector	—	—
91	V/W	Sensor power supply (EVAP control system pressure sensor)	**[Ignition switch: ON]**	Approximately 5 V
92	B/Y	Sensor ground (ASCD steering switch)	**[Engine is running]** • **Warm-up condition** • Idle speed	Approximately 0 V
93	B/R	Ignition switch	**[Ignition switch: OFF]**	0 V
			[Ignition switch: ON]	BATTERY VOLTAGE (11 - 14 V)
95	G/O	Fuel tank temperature sensor	**[Engine is running]**	Approximately 0 - 4.8 V Output voltage varies with fuel tank temperature
96	V/R	Sensor ground (EVAP control system pressure sensor)	**[Engine is running]** • **Warm-up condition** • Idle speed	Approximately 0 V
97	P	CAN communication line	—	—
98	L	CAN communication line	—	—

TERMINAL NO.	WIRE COLOR	ITEM	CONDITION	DATA (DC Voltage)
100	B	Sensor ground (Accelerator pedal position sensor 2)	**[Engine is running]** • **Warm-up condition** • Idle speed	Approximately 0 V
102	BR/R	PNP signal	**[Ignition switch: ON]** • Selector lever: P or N (CVT), Neutral (M/T)	BATTERY VOLTAGE (11 - 14 V)
			[Ignition switch: ON] • Except above	Approximately 0 V
104	B/P	Sensor ground (Fuel tank temperature sensor)	**[Engine is running]** • **Warm-up condition** • Idle speed	Approximately 0 V
105	G	Power supply for ECM	**[Ignition switch: ON]**	BATTERY VOLTAGE (11 - 14 V)
106	R/G	Stop lamp switch	**[Ignition switch: OFF]** • Brake pedal: Fully released	Approximately 0 V
			[Ignition switch: OFF] • Brake pedal: Slightly depressed	BATTERY VOLTAGE (11 - 14 V)
107 108	B B	ECM ground	**[Engine is running]** • Idle speed	Body ground
109	L/Y	EVAP canister vent control valve	**[Ignition switch: ON]**	BATTERY VOLTAGE (11 - 14 V)
110	G/B	ASCD brake switch	**[Ignition switch: ON]** • Brake pedal: Slightly depressed (CVT) • Brake pedal and/or clutch pedal: Slightly depressed (M/T)	Approximately 0 V
			[Ignition switch: ON] • Brake pedal: Fully released (CVT) • Brake pedal and clutch pedal: Fully released (M/T)	BATTERY VOLTAGE (11 - 14 V)
111 112	B B	ECM ground	**[Engine is running]** • Idle speed	Body ground

★: Average voltage for pulse signal (Actual pulse signal can be confirmed by oscilloscope.)

CONSULT-III Function (ENGINE)

INFOID:0000000005285755

FUNCTION

Diagnostic test mode	Function
Work support	This mode enables a technician to adjust some devices faster and more accurately by following the indications on the CONSULT-III screen.
Self Diagnostic Result	Self-diagnostic results such as 1st trip DTC, DTCs and 1st trip freeze frame data or freeze frame data can be read and erased quickly.*
Data Monitor	Input/Output data in the ECM can be read.
Active Test	Diagnostic Test Mode in which CONSULT-III drives some actuators apart from the ECMs and also shifts some parameters in a specified range.
Function Test	This mode is used to inform customers when their vehicle condition requires periodic maintenance.
DTC & SRT Confirmation	The status of system monitoring tests and the self-diagnosis status/result can be confirmed.
Ecu Identification	ECM part number can be read.

*: The following emission-related diagnostic information is cleared when the ECM memory is erased.

- Diagnostic trouble codes
- 1st trip diagnostic trouble codes
- Freeze frame data
- 1st trip freeze frame data

- System readiness test (SRT) codes
- Test values

WORK SUPPORT MODE

Work Item

Work item	Condition	USAGE
FUEL PRESSURE RELEASE	• FUEL PUMP WILL STOP BY TOUCHING “START” DURING IDLING. CRANK A FEW TIMES AFTER ENGINE STALLS.	When releasing fuel pressure from fuel line
IDLE AIR VOL LEARN	• THE IDLE AIR VOLUME THAT KEEPS THE ENGINE WITHIN THE SPECIFIED RANGE IS MEMORIZED IN ECM.	When learning the idle air volume
SELF-LEARNING CONT	• THE COEFFICIENT OF SELF-LEARNING CONTROL MIXTURE RATIO RETURNS TO THE ORIGINAL COEFFICIENT.	When clearing the coefficient of self-learning control value
EVAP SYSTEM CLOSE	CLOSE THE EVAP CANISTER VENT CONTROL VALVE IN ORDER TO MAKE EVAP SYSTEM CLOSE UNDER THE FOLLOWING CONDITIONS. • IGN SW “ON” • ENGINE NOT RUNNING • AMBIENT TEMPERATURE IS ABOVE 0°C (32°F). • NO VACUUM AND NO HIGH PRESSURE IN EVAP SYSTEM • FUEL TANK TEMP. IS MORE THAN 0°C (32°F). • WITHIN 10 MINUTES AFTER STARTING “EVAP SYSTEM CLOSE” • WHEN TRYING TO EXECUTE “EVAP SYSTEM CLOSE” UNDER THE CONDITION EXCEPT ABOVE, CONSULT-III WILL DISCONTINUE IT AND DISPLAY APPROPRIATE INSTRUCTION. **NOTE:** **WHEN STARTING ENGINE, CONSULT-III MAY DISPLAY “BATTERY VOLTAGE IS LOW. CHARGE BATTERY”, EVEN IN USING CHARGED BATTERY.**	When detecting EVAP vapor leak point of EVAP system
TARGET IDLE RPM ADJ*	• IDLE CONDITION	When setting target idle speed
TARGET IGN TIM ADJ*	• IDLE CONDITION	When adjusting target ignition timing
VIN REGISTRATION	• IN THIS MODE, VIN IS REGISTERED IN ECM.	When registering VIN in ECM

*: This function is not necessary in the usual service procedure.

SELF-DIAG RESULTS MODE

Self Diagnostic Item

Regarding items of DTC and 1st trip DTC, refer to EC-1155, "Emission-related Diagnostic Information".

Freeze Frame Data and 1st Trip Freeze Frame Data

Freeze frame data item*	Description
DIAG TROUBLE CODE [PXXXX]	• The engine control component part/control system has a trouble code, it is displayed as PXXXX. (Refer to EC-1117.)
FUEL SYS-B1	• “Fuel injection system status” at the moment a malfunction is detected is displayed. • One mode in the following is displayed. Mode2: Open loop due to detected system malfunction Mode3: Open loop due to driving conditions (power enrichment, deceleration enleanment) Mode4: Closed loop - using oxygen sensor(s) as feedback for fuel control Mode5: Open loop - has not yet satisfied condition to go to closed loop
FUEL SYS-B2	
CAL/LD VALUE [%]	• The calculated load value at the moment a malfunction is detected is displayed.
COOLANT TEMP [°C] or [°F]	• The engine coolant temperature at the moment a malfunction is detected is displayed.

Freeze frame data item*	Description
L-FUEL TRM-B1 [%]	• "Long-term fuel trim" at the moment a malfunction is detected is displayed. • The long-term fuel trim indicates much more gradual feedback compensation to the base fuel schedule than short-term fuel trim.
L-FUEL TRM-B2 [%]	
S-FUEL TRM-B1 [%]	• "Short-term fuel trim" at the moment a malfunction is detected is displayed. • The short-term fuel trim indicates dynamic or instantaneous feedback compensation to the base fuel schedule.
S-FUEL TRM-B2 [%]	
ENGINE SPEED [rpm]	• The engine speed at the moment a malfunction is detected is displayed.
VEHICL SPEED [km/h] or [mph]	• The vehicle speed at the moment a malfunction is detected is displayed.
ABSOL TH-P/S [%]	• The throttle valve opening angle at the moment a malfunction is detected is displayed.
B/FUEL SCHDL [msec]	• The base fuel schedule at the moment a malfunction is detected is displayed.
INT/A TEMP SE [°C] or [°F]	• The intake air temperature at the moment a malfunction is detected is displayed.
INT MANI PRES [kPa]	• These items are displayed but are not applicable to this model.
COMBUST CONDITION	

*: The items are the same as those of 1st trip freeze frame data.

DATA MONITOR MODE

Monitored Item

×: Applicable

Monitored item	Unit	Description	Remarks
ENG SPEED	rpm	• Indicates the engine speed computed from the signals of the crankshaft position sensor (POS) and camshaft position sensor (PHASE).	• Accuracy becomes poor if engine speed drops below the idle rpm. • If the signal is interrupted while the engine is running, an abnormal value may be indicated.
MAS A/F SE-B1	V	• The signal voltage of the mass air flow sensor is displayed.	• When the engine is stopped, a certain value is indicated. • When engine is running specification range is indicated in "SPEC".
B/FUEL SCHDL	ms	• "Base fuel schedule" indicates the fuel injection pulse width programmed into ECM, prior to any learned on board correction.	• When engine is running specification range is indicated in "SPEC".
A/F ALPHA-B1	%	• The mean value of the air-fuel ratio feedback correction factor per cycle is indicated.	• When the engine is stopped, a certain value is indicated. • When engine is running specification range is indicated in "SPEC". • This data also includes the data for the air/fuel ratio learning control.
A/F ALPHA-B2	%		
COOLAN TEMP/S	°C or °F	• The engine coolant temperature (determined by the signal voltage of the engine coolant temperature sensor) is displayed.	• When the engine coolant temperature sensor is open or short-circuited, ECM enters fail-safe mode. The engine coolant temperature determined by the ECM is displayed.
A/F SEN1 (B1)	V	• The A/F signal computed from the input signal of the A/F sensor 1 is displayed.	
A/F SEN1 (B2)	V		
HO2S2 (B1)	V	• The signal voltage of the heated oxygen sensor 2 is displayed.	
HO2S2 (B2)	V		
HO2S2 MNTR (B1)	RICH/LEAN	• Display of heated oxygen sensor 2 signal: RICH: means the amount of oxygen after three way catalyst is relatively small. LEAN: means the amount of oxygen after three way catalyst is relatively large.	• When the engine is stopped, a certain value is indicated.
HO2S2 MNTR (B2)	RICH/LEAN		

Monitored item	Unit	Description	Remarks
VHCL SPEED SE	km/h or mph	• The vehicle speed computed from the vehicle speed signal is displayed.	
BATTERY VOLT	V	• The power supply voltage of ECM is displayed.	
ACCEL SEN 1	V	• The accelerator pedal position sensor signal voltage is displayed.	• ACCEL SEN 2 signal is converted by ECM internally. Thus, it differs from ECM terminal voltage signal.
ACCEL SEN 2	V		
TP SEN 1-B1	V	• The throttle position sensor signal voltage is displayed.	• TP SEN 2-B1 signal is converted by ECM internally. Thus, it differs from ECM terminal voltage signal.
TP SEN 2-B1	V		
FUEL T/TMP SE	°C or °F	• The fuel temperature (determined by the signal voltage of the fuel tank temperature sensor) is displayed.	
VEHICLE SPEED	km/h or mph	• Indicates the vehicle speed computed from the output speed sensor signal.	
INT/A TEMP SE	°C or °F	• The intake air temperature (determined by the signal voltage of the intake air temperature sensor) is indicated.	
EVAP SYS PRES	V	• The signal voltage of EVAP control system pressure sensor is displayed.	
FUEL LEVEL SE	V	• The signal voltage of the fuel level sensor is displayed.	
START SIGNAL	ON/OFF	• Indicates start signal status [ON/OFF] computed by the ECM according to the signals of engine speed and battery voltage.	• After starting the engine, [OFF] is displayed regardless of the starter signal.
CLSD THL POS	ON/OFF	• Indicates idle position [ON/OFF] computed by the ECM according to the accelerator pedal position sensor signal.	
AIR COND SIG	ON/OFF	• Indicates [ON/OFF] condition of the air conditioner switch as determined by the air conditioner signal.	
P/N POSI SW	ON/OFF	• Indicates [ON/OFF] condition from the park/neutral position (PNP) signal.	
PW/ST SIGNAL	ON/OFF	• [ON/OFF] condition of the power steering system (determined by the signal sent from EPS control unit) is indicated.	
LOAD SIGNAL	ON/OFF	• Indicates [ON/OFF] condition from the electrical load signal. ON: Rear window defogger switch is ON and/or lighting switch is in 2nd position. OFF: Both rear window defogger switch and lighting switch are OFF.	
IGNITION SW	ON/OFF	• Indicates [ON/OFF] condition from ignition switch.	
HEATER FAN SW	ON/OFF	• Indicates [ON/OFF] condition from the heater fan switch signal.	
BRAKE SW	ON/OFF	• Indicates [ON/OFF] condition from the stop lamp switch signal.	
I/P PULLY SPD	rpm	• Indicates the engine speed computed from the input speed sensor signal.	
INJ PULSE-B1	msec	• Indicates the actual fuel injection pulse width compensated by ECM according to the input signals.	• When the engine is stopped, a certain computed value is indicated.
INJ PULSE-B2	msec		
IGN TIMING	BTDC	• Indicates the ignition timing computed by ECM according to the input signals.	• When the engine is stopped, a certain value is indicated.

Monitored item	Unit	Description	Remarks
CAL/LD VALUE	%	• “Calculated load value” indicates the value of the current airflow divided by peak airflow.	
MASS AIRFLOW·	g·m/s	• Indicates the mass airflow computed by ECM according to the signal voltage of the mass air flow sensor.	
PURG VOL C/V	%	• Indicates the EVAP canister purge volume control solenoid valve control value computed by the ECM according to the input signals. • The opening becomes larger as the value increases.	
INT/V TIM (B1)	°CA	• Indicates [°CA] of intake camshaft advanced angle.	
INT/V SOL (B1)	%	• The control value of the intake valve timing control solenoid valve (determined by ECM according to the input signal) is indicated. • The advance angle becomes larger as the value increases	
AIR COND RLY	ON/OFF	• The air conditioner relay control condition (determined by ECM according to the input signals) is indicated.	
FUEL PUMP RLY	ON/OFF	• Indicates the fuel pump relay control condition determined by ECM according to the input signals.	
VENT CONT/V	ON/OFF	• The control condition of the EVAP canister vent control valve (determined by ECM according to the input signals) is indicated. ON: Closed OFF: Open	
THRTL RELAY	ON/OFF	• Indicates the throttle control motor relay control condition determined by the ECM according to the input signals.	
COOLING FAN	HI/LOW/OFF	• Indicates the condition of the cooling fan (determined by ECM according to the input signals). HI: High speed operation LOW: Low speed operation OFF: Stop	
HO2S2 HTR (B1)	ON/OFF	• Indicates [ON/OFF] condition of heated oxygen sensor 2 heater determined by ECM according to the input signals.	
HO2S2 HTR (B2)	ON/OFF		
IDL A/V LEARN	YET/CMPLT	• Display the condition of idle air volume learning YET: Idle Air Volume Learning has not been performed yet. CMPLT: Idle Air Volume Learning has already been performed successfully.	
TRVL AFTER MIL	km or mile	• Distance traveled while MIL is activated.	
A/F S1 HTR (B1)	%	• Indicates A/F sensor 1 heater control value computed by ECM according to the input signals. • The current flow to the heater becomes larger as the value increases.	
A/F S1 HTR (B2)	%		
AC PRESS SEN	V	• The signal voltage from the refrigerant pressure sensor is displayed.	
VHCL SPEED SE	km/h or mph	• The vehicle speed computed from the vehicle speed signal sent from TCM is displayed.	
SET VHCL SPD	km/h or mph	• The preset vehicle speed is displayed.	

Monitored item	Unit	Description	Remarks
MAIN SW	ON/OFF	• Indicates [ON/OFF] condition from MAIN switch signal.	
CANCEL SW	ON/OFF	• Indicates [ON/OFF] condition from CANCEL switch signal.	
RESUME/ACC SW	ON/OFF	• Indicates [ON/OFF] condition from RESUME/ACCELERATE switch signal.	
SET SW	ON/OFF	• Indicates [ON/OFF] condition from SET/COAST switch signal.	
BRAKE SW1	ON/OFF	• Indicates [ON/OFF] condition from ASCD brake switch signal.	
BRAKE SW2	ON/OFF	• Indicates [ON/OFF] condition of stop lamp switch signal.	
VHCL SPD CUT	NON/CUT	• Indicates the vehicle cruise condition. NON: Vehicle speed is maintained at the ASCD set speed. CUT: Vehicle speed increased to excessively high compared with the ASCD set speed, and ASCD operation is cut off.	
LO SPEED CUT	NON/CUT	• Indicates the vehicle cruise condition. NON: Vehicle speed is maintained at the ASCD set speed. CUT: Vehicle speed decreased to excessively low compared with the ASCD set speed, and ASCD operation is cut off.	
AT OD MONITOR	ON/OFF	• Indicates [ON/OFF] condition of CVT according to the input signal from the TCM.	• For M/T models always “OFF” is displayed
AT OD CANCEL	ON/OFF	• Indicates [ON/OFF] condition of CVT cancel signal sent from the TCM.	• For M/T models always “OFF” is displayed
CRUISE LAMP	ON/OFF	• Indicates [ON/OFF] condition of CRUISE lamp determined by the ECM according to the input signals.	
SET LAMP	ON/OFF	• Indicates [ON/OFF] condition of SET lamp determined by the ECM according to the input signals.	
A/F ADJ-B1		• Indicates the correction factor stored in ECM. The factor is calculated from the difference between the target air/fuel ratio stored in ECM and the air/fuel ratio calculated from air fuel ratio (A/F) sensor 1 signal.	
A/F ADJ-B2			
HO2 S2 DIAG1 (B1)	INCMP/CMPLT	• Indicates DTC P0139 self-diagnosis (delayed responce) condition. INCMP: Self-diagnosis is incomplete. CMPLT: Self-diagnosis is complete.	
HO2 S2 DIAG1 (B2)	INCMP/CMPLT	• Indicates DTC P0159 self-diagnosis (delayed responce) condition. INCMP: Self-diagnosis is incomplete. CMPLT: Self-diagnosis is complete.	
HO2 S2 DIAG2 (B1)	INCMP/CMPLT	• Indicates DTC P0139 self-diagnosis (slow responce) condition. INCMP: Self-diagnosis is incomplete. CMPLT: Self-diagnosis is complete.	
HO2 S2 DIAG2 (B2)	INCMP/CMPLT	• Indicates DTC P0159 self-diagnosis (slow responce) condition. INCMP: Self-diagnosis is incomplete. CMPLT: Self-diagnosis is complete.	

NOTE:

Any monitored item that does not match the vehicle being diagnosed is deleted from the display automatically.

ACTIVE TEST MODE

Test Item

TEST ITEM	CONDITION	JUDGMENT	CHECK ITEM (REMEDY)
FUEL INJECTION	• Engine: Return to the original trouble condition • Change the amount of fuel injection using CONSULT-III.	If trouble symptom disappears, see CHECK ITEM.	• Harness and connectors • Fuel injector • Air fuel ratio (A/F) sensor 1
IGNITION TIMING	• Engine: Return to the original trouble condition • Timing light: Set • Retard the ignition timing using CONSULT-III.	If trouble symptom disappears, see CHECK ITEM.	• Perform Idle Air Volume Learning.
POWER BALANCE	• Engine: After warming up, idle the engine. • A/C switch OFF • Selector lever: P or N (CVT), Neutral (M/T) • Cut off each fuel injector signal one at a time using CONSULT-III.	Engine runs rough or dies.	• Harness and connectors • Compression • Fuel injector • Power transistor • Spark plug • Ignition coil
COOLING FAN*	• Ignition switch: ON • Turn the cooling fan “LOW”, “HI” and “OFF” with CONSULT-III.	Cooling fan moves and stops.	• Harness and connectors • Cooling fan relay • Cooling fan motor
ENG COOLANT TEMP	• Engine: Return to the original trouble condition • Change the engine coolant temperature using CONSULT-III.	If trouble symptom disappears, see CHECK ITEM.	• Harness and connectors • Engine coolant temperature sensor • Fuel injector
FUEL PUMP RELAY	• Ignition switch: ON (Engine stopped) • Turn the fuel pump relay “ON” and “OFF” using CONSULT-III and listen to operating sound.	Fuel pump relay makes the operating sound.	• Harness and connectors • Fuel pump relay
PURG VOL CONT/V	• Engine: After warming up, run engine at 1,500 rpm. • Change the EVAP canister purge volume control solenoid valve opening percent using CONSULT-III.	Engine speed changes according to the opening percent.	• Harness and connectors • EVAP canister purge volume control solenoid valve
FUEL/T TEMP SEN	• Change the fuel tank temperature using CONSULT-III.		
VENT CONTROL/V	• Ignition switch: ON (Engine stopped) • Turn solenoid valve “ON” and “OFF” with the CONSULT-III and listen to operating sound.	Solenoid valve makes an operating sound.	• Harness and connectors • EVAP canister vent control valve
V/T ASSIGN ANGLE	• Engine: Return to the original trouble condition • Change intake valve timing using CONSULT-III.	If trouble symptom disappears, see CHECK ITEM.	• Harness and connectors • Intake valve timing control solenoid valve

*: Leaving cooling fan OFF with CONSULT-III while engine is running may cause the engine to overheat.

DTC & SRT CONFIRMATION MODE

SRT STATUS Mode
For details, refer to EC-1155, "Emission-related Diagnostic Information".

PERMANENT DTC STATUS Mode
For details, refer to EC-1155, "Emission-related Diagnostic Information".
NOTE:
This mode is not used in regions that permanent DTCs are not regulated by law.

SRT WORK SUPPORT Mode
This mode enables a technician to drive a vehicle to set the SRT while monitoring the SRT status.

PERMANENT DTC WORK SUPPORT Mode
This mode enables a technician to drive a vehicle to complete the driving pattern that is reguired for erasing permanent DTC.
NOTE:
This mode is not used in regions that permanent DTCs are not regulated by law.

DTC WORK SUPPORT Mode

Test mode	Test item	Corresponding DTC No.	Reference page
EVAPORATIVE SYSTEM	EVP SML LEAK P0442/P1442*	P0442	EC-1447
		P0455	EC-1497
	EVP V/S LEAK P0456/P1456*	P0456	EC-1504
	PURG VOL CN/V P1444	P0443	EC-1454
	PURG FLOW P0441	P0441	EC-1442
A/F SEN1	A/F SEN1 (B1) P1278/P1279	P0133	EC-1345
	A/F SEN1 (B1) P1276	P0130	EC-1321
	A/F SEN1 (B2) P1288/P1289	P0153	EC-1345
	A/F SEN1 (B2) P1286	P0150	EC-1321
HO2S2	HO2S2 (B1) P1146	P0138	EC-1363
	HO2S2 (B1) P1147	P0137	EC-1354
	HO2S2 (B1) P0139	P0139	EC-1375
	HO2S2 (B2) P1166	P0158	EC-1363
	HO2S2 (B2) P1167	P0157	EC-1354
	HO2S2 (B2) P0159	P0159	EC-1375

*: DTC P1442 and P1456 does not apply to B16 models but appears in DTC Work Support Mode screens.

Generic Scan Tool (GST) Function

INFOID:0000000005285756

DESCRIPTION

Generic Scan Tool (OBD II scan tool) complying with SAE J1978/ ISO 15031-4 has several functions explained below.
ISO15765-4 is used as the protocol.
The name GST or Generic Scan Tool is used in this service manual.

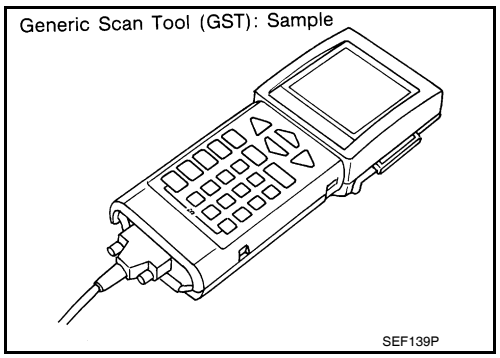

FUNCTION

Diagnostic test mode		Function
Service $01	READINESS TESTS	This diagnostic service gains access to current emission-related data values, including analog inputs and outputs, digital inputs and outputs, and system status information.
Service $02	(FREEZE DATA)	This diagnostic service gains access to emission-related data value which were stored by ECM during the freeze frame. For details, refer to EC-1224, "CONSULT-III Function (ENGINE)".
Service $03	DTCs	This diagnostic service gains access to emission-related power train trouble codes which were stored by ECM.

Diagnostic test mode		Function
Service $04	CLEAR DIAG INFO	This diagnostic service can clear all emission-related diagnostic information. This includes: • Clear number of diagnostic trouble codes (Service $01) • Clear diagnostic trouble codes (Service $03) • Clear trouble code for freeze frame data (Service $01) • Clear freeze frame data (Service $02) • Reset status of system monitoring test (Service $01) • Clear on board monitoring test results (Service $06 and $07)
Service $06	(ON BOARD TESTS)	This diagnostic service accesses the results of on board diagnostic monitoring tests of specific components/systems that are not continuously monitored.
Service $07	(ON BOARD TESTS)	This diagnostic service enables the off board test drive to obtain test results for emission-related powertrain components/systems that are continuously monitored during normal driving conditions.
Service $08	—	This diagnostic service can close EVAP system in ignition switch ON position (Engine stopped). When this diagnostic service is performed, EVAP canister vent control valve can be closed. In the following conditions, this diagnostic service cannot function. • Low ambient temperature • Low battery voltage • Engine running • Ignition switch OFF • Low fuel temperature • Too much pressure is applied to EVAP system
Service $09	(CALIBRATION ID)	This diagnostic service enables the off-board test device to request specific vehicle information such as Vehicle Identification Number (VIN) and Calibration IDs.
Service $0A*	PERMANENT DTCs	This diagnostic service gains access to permanent DTCs which were stored by ECM.

NOTE:

*: Service $0A is not applied for regions where it is not mandated.

INSPECTION PROCEDURE

1. Turn ignition switch OFF.
2. Connect GST to data link connector (1).
   • Accelerator pedal (2)

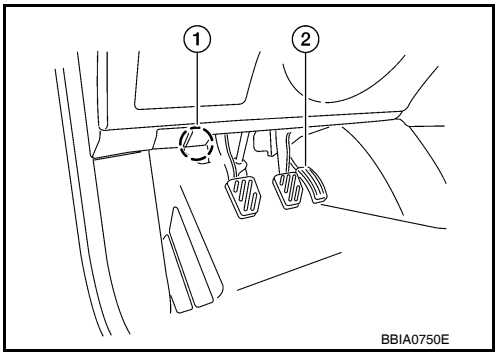

3. Turn ignition switch ON.
4. Enter the program according to instruction on the screen or in the operation manual.
   (*: Regarding GST screens in this section, sample screens are shown.)

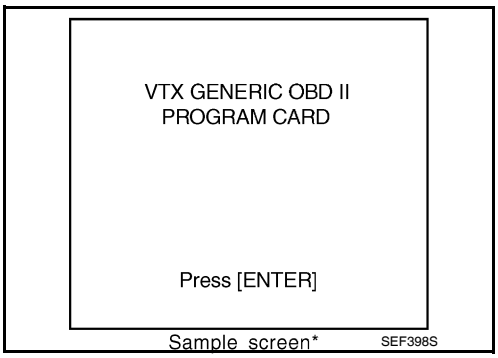

5. Perform each diagnostic service according to each service procedure.
For further information, see the GST Operation Manual of the tool maker.

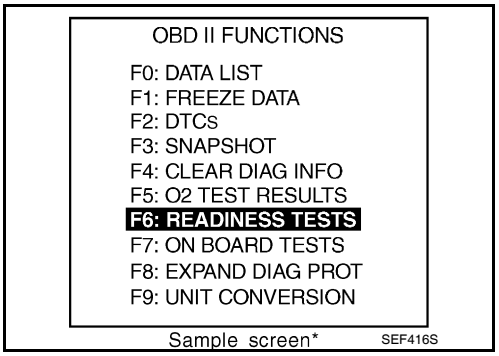

CONSULT-III Reference Value in Data Monitor Mode

INFOID:0000000005285757

Remarks:
- Specification data are reference values.
- Specification data are output/input values which are detected or supplied by the ECM at the connector.
  * Specification data may not be directly related to their components signals/values/operations.
  i.e. Adjust ignition timing with a timing light before monitoring IGN TIMING, because the monitor may show the specification data in spite of the ignition timing not being adjusted to the specification data. This IGN TIMING monitors the data calculated by the ECM according to the signals input from the camshaft position sensor and other ignition timing related sensors.

Monitor item	Condition		Specification
ENG SPEED	• Run engine and compare CONSULT-III value with the tachometer indication.		Almost the same speed as the tachometer indication.
MAS A/F SE-B1	See EC-1237.		
B/FUEL SCHDL	See EC-1237.		
A/F ALPHA-B1 A/F ALPHA-B2	See EC-1237.		
COOLAN TEMP/S	• Engine: After warming up		More than 70°C (158°F)
A/F SEN1 (B1) A/F SEN1 (B2)	• Engine: After warming up	Maintaining engine speed at 2,000 rpm	Fluctuates around 2.2 V
HO2S2 (B1) HO2S2 (B2)	• Revving engine from idle to 3,000 rpm quickly after the following conditions are met - Engine: After warming up - Keeping the engine speed between 3,500 and 4,000 rpm for 1 minute and at idle for 1 minute under no load		0 - 0.3 V ←→ Approx. 0.6 - 1.0 V
HO2S2 MNTR (B1) HO2S2 MNTR (B2)	• Revving engine from idle to 3,000 rpm quickly after the following conditions are met - Engine: After warming up - Keeping the engine speed between 3,500 and 4,000 rpm for 1 minute and at idle for 1 minute under no load		LEAN ←→ RICH
VHCL SPEED SE	• Turn drive wheels and compare CONSULT-III value with the speedometer indication.		Almost the same speed as the speedometer indication.
BATTERY VOLT	• Ignition switch: ON (Engine stopped)		11 - 14 V
ACCEL SEN 1	• Ignition switch: ON (Engine stopped) • Selector lever: D (CVT), 1st (M/T)	Accelerator pedal: Fully released	0.6 - 0.9 V
		Accelerator pedal: Fully depressed	4.0 - 4.8 V
ACCEL SEN 2*	• Ignition switch: ON (Engine stopped) • Selector lever: D (CVT), 1st (M/T)	Accelerator pedal: Fully released	0.6 - 0.9 V
		Accelerator pedal: Fully depressed	3.9 - 4.8 V
TP SEN 1-B1 TP SEN 2-B1*	• Ignition switch: ON (Engine stopped) • Selector lever: D (CVT), 1st (M/T)	Accelerator pedal: Fully released	More than 0.36 V
		Accelerator pedal: Fully depressed	Less than 4.75 V

Monitor item	Condition		Specification
VEHICLE SPEED	• Turn drive wheels and compare CONSULT-III value with speedometer indication.		Almost the same speed as the speedometer indication
EVAP SYS PRES	• Ignition switch: ON		1.8 - 4.8 V
START SIGNAL	• Ignition switch: ON → START → ON		OFF → ON → OFF
CLSD THL POS	• Ignition switch: ON (Engine stopped)	Accelerator pedal: Fully released	ON
		Accelerator pedal: Slightly depressed	OFF
AIR COND SIG	• Engine: After warming up, idle the engine	Air conditioner switch: OFF	OFF
		Air conditioner switch: ON (Compressor operates.)	ON
P/N POSI SW	• Ignition switch: ON	Selector lever: P or N (CVT), Neutral (M/T)	ON
		Selector lever: Except above position	OFF
PW/ST SIGNAL	• Engine: After warming up, idle the engine	Steering wheel: Not being turned.	OFF
		Steering wheel: Being turned.	ON
LOAD SIGNAL	• Ignition switch: ON	Rear window defogger switch: ON and/or Lighting switch: 2nd position	ON
		Rear window defogger switch is OFF and lighting switch: OFF	OFF
IGNITION SW	• Ignition switch: ON → OFF → ON		ON → OFF → ON
HEATER FAN SW	• Engine: After warming up, idle the engine	Heater fan: Operating	ON
		Heater fan: Not operating	OFF
BRAKE SW	• Ignition switch: ON	Brake pedal: Fully released	OFF
		Brake pedal: Slightly depressed	ON
I/P PULLY SPD	• Vehicle speed: More than 20 km/h (12 MPH)		Almost the same speed as the tachometer indication
INJ PULSE-B1	• Engine: After warming up • Selector lever: P or N (CVT), Neutral (M/T) • Air conditioner switch: OFF • No load	Idle	2.0 - 3.0 msec
INJ PULSE-B2		2,000 rpm	1.9 - 2.9 msec
IGN TIMING	• Engine: After warming up • Selector lever: P or N (CVT), Neutral (M/T) • Air conditioner switch: OFF • No load	Idle	5° - 15° BTDC
		2,000 rpm	25° - 45° BTDC
CAL/LD VALUE	• Engine: After warming up • Selector lever: P or N (CVT), Neutral (M/T) • Air conditioner switch: OFF • No load	Idle	10% - 35%
		2,500 rpm	10% - 35%
MASS AIRFLOW	• Engine: After warming up • Selector lever: P or N (CVT), Neutral (M/T) • Air conditioner switch: OFF • No load	Idle	1.0 - 4.0 g·m/s
		2,500 rpm	4.0 - 10.0 g·m/s
PURG VOL C/V	• Engine: After warming up • Selector lever: P or N (CVT), Neutral (M/T) • Air conditioner switch: OFF • No load	Idle (Accelerator pedal: Not depressed even slightly, after engine starting)	0%
		2,000 rpm	20 - 90%

Monitor item	Condition		Specification
INT/V TIM (B1)	• Engine: After warming up • Selector lever: P or N (CVT), Neutral (M/T) • Air conditioner switch: OFF • No load	Idle	–5° - 5°CA
		2,000 rpm	Approx. 0° - 20°CA
INT/V SOL (B1)	• Engine: After warming up • Selector lever: P or N (CVT), Neutral (M/T) • Air conditioner switch: OFF • No load	Idle	0%
		2,000 rpm	Approx. 0% - 60%
AIR COND RLY	• Engine: After warming up, idle the engine	Air conditioner switch: OFF	OFF
		Air conditioner switch: ON (Compressor operates)	ON
FUEL PUMP RLY	• For 1 seconds after turning ignition switch ON • Engine running or cranking		ON
	• Except above conditions		OFF
VENT CONT/V	• Ignition switch: ON		OFF
THRTL RELAY	• Ignition switch: ON		ON
COOLING FAN	• Engine: After warming up, idle the engine • Air conditioner switch: OFF	Engine coolant temperature is 97°C (207°F) or less	OFF
		Engine coolant temperature is between 98°C (208°F) and 99°C (210°F)	LOW
		Engine coolant temperature is 100°C (212°F) or more	HIGH
HO2S2 HTR (B1) HO2S2 HTR (B2)	• Engine speed: Below 3,600 rpm after the following conditions are met - Engine: After warming up - Keeping the engine speed between 3,500 and 4,000 rpm for 1 minute and at idle for 1 minute under no load		ON
	• Engine speed: Above 3,600 rpm		OFF
TRVL AFTER MIL	• Ignition switch: ON	Vehicle has traveled after MIL has turned ON.	0 - 65,535 km (0 - 40,723 mile)
A/F S1 HTR (B1) A/F S1 HTR (B2)	• Engine: After warming up, idle the engine (More than 140 seconds after starting engine.)		4 - 100%
AC PRESS SEN	• Both A/C switch and blower fan switch: ON (Compressor operates)		
	• Engine: Idle		1.0 - 4.0 V
VHCL SPEED SE	• Turn drive wheels and compare the CONSULT-III value with speedometer indication.		Almost the same speed as the speedometer indication.
SET VHCL SPD	• Engine: Running	ASCD: Operating	The preset vehicle speed is displayed.
MAIN SW	• Ignition switch: ON	MAIN switch: Pressed	ON
		MAIN switch: Released	OFF
CANCEL SW	• Ignition switch: ON	CANCEL switch: Pressed	ON
		CANCEL switch: Released	OFF
RESUME/ACC SW	• Ignition switch: ON	RESUME/ACCELERATE switch: Pressed	ON
		RESUME/ACCELERATE switch: Released	OFF
SET SW	• Ignition switch: ON	SET/COAST switch: Pressed	ON
		SET/COAST switch: Released	OFF

Monitor item	Condition		Specification
BRAKE SW1 (ASCD brake switch)	• Ignition switch: ON	• Brake pedal: Fully released (CVT) • Brake peal and clutch pedal: Fully released (M/T)	ON
		• Brake pedal: Slightly depressed (CVT) • Brake peal and/or clutch pedal: Slightly depressed (M/T)	OFF
BRAKE SW2 (Stop lamp switch)	• Ignition switch: ON	Brake pedal: Fully released	OFF
		Brake pedal: Slightly depressed	ON
CRUISE LAMP	• Ignition switch: ON	MAIN switch: Pressed at the 1st time → 2nd time	ON → OFF
SET LAMP	• MAIN switch: ON • When vehicle speed is between 40 km/h (25 MPH) and 144 km/h (89 MPH)	ACSD: Operating	ON
		ASCD: Not operating	OFF
HO2 S2 DIAG1 (B1)	DTC P0139 self-diagnosis (delayed response) is incomplete.		INCMP
	DTC P0139 self-diagnosis (delayed response) is complete.		CMPLT
HO2 S2 DIAG1 (B2)	DTC P0159 self-diagnosis (delayed response) is incomplete.		INCMP
	DTC P0159 self-diagnosis (delayed response) is complete.		CMPLT
HO2 S2 DIAG2 (B1)	DTC P0139 self-diagnosis (slow response) is incomplete.		INCMP
	DTC P0139 self-diagnosis (slow response) is complete.		CMPLT
HO2 S2 DIAG2 (B2)	DTC P0159 self-diagnosis (slow response) is incomplete.		INCMP
	DTC P0159 self-diagnosis (slow response) is complete.		CMPLT

*: Accelerator pedal position sensor 2 signal and throttle position sensor 2 signal are converted by ECM internally. Thus, they differ from ECM terminals voltage signal.

TROUBLE DIAGNOSIS - SPECIFICATION VALUE

Description

INFOID:0000000005285758

The specification (SP) value indicates the tolerance of the value that is displayed in “SPEC” of “DATA MONITOR” mode with CONSULT-III during normal operation of the Engine Control System. When the value in “SPEC” of “DATA MONITOR” mode is within the SP value, the Engine Control System is confirmed OK. When the value in “SPEC” of “DATA MONITOR” mode is NOT within the SP value, the Engine Control System may have one or more malfunctions.
The SP value is used to detect malfunctions that may affect the Engine Control System, but will not light the MIL.
The SP value will be displayed for the following three items:
- B/FUEL SCHDL (The fuel injection pulse width programmed into ECM prior to any learned on board correction)
- A/F ALPHA-B1 /B2 (The mean value of air-fuel ratio feedback correction factor per cycle)
- MAS A/F SE-B1 (The signal voltage of the mass air flow sensor)

Testing Condition

INFOID:0000000005285759

- Vehicle driven distance: More than 5,000 km (3,107 miles)
- Barometric pressure: 98.3 - 104.3 kPa (1.003 - 1.064 kg/cm^2, 14.25 - 15.12 psi)
- Atmospheric temperature: 20 - 30°C (68 - 86°F)
- Engine coolant temperature: 75 - 95°C (167 - 203°F)
- Transmission: Warmed-up
  - CVT models: After the engine is warmed up to normal operating temperature, drive vehicle until “FLUID TEMP SE” fluid temperature sensor signal) indicates more than 60°C (140°F).
  - M/T models: After the engine is warmed up to normal operating temperature, drive vehicle for 5 minutes.
- Electrical load: Not applied
  - Rear window defogger switch, air conditioner switch, lighting switch are OFF. Steering wheel is straight ahead.
- Engine speed: Idle

Inspection Procedure

INFOID:0000000005285760

NOTE:
Perform “SPEC” in “DATA MONITOR” mode in maximum scale display.

1. Perform EC-1187, "Basic Inspection".
2. Confirm that the testing conditions indicated above are met.
3. Select “B/FUEL SCHDL”, “A/F ALPHA-B1”, “A/F ALPHA-B2 ”and “MAS A/F SE-B1” in “SPEC” of “DATA MONITOR” mode with CONSULT-III.
4. Check that monitor items are within the SP value.
5. If NG, go to EC-1237, "Diagnosis Procedure".

Diagnosis Procedure

INFOID:0000000005285761

OVERALL SEQUENCE

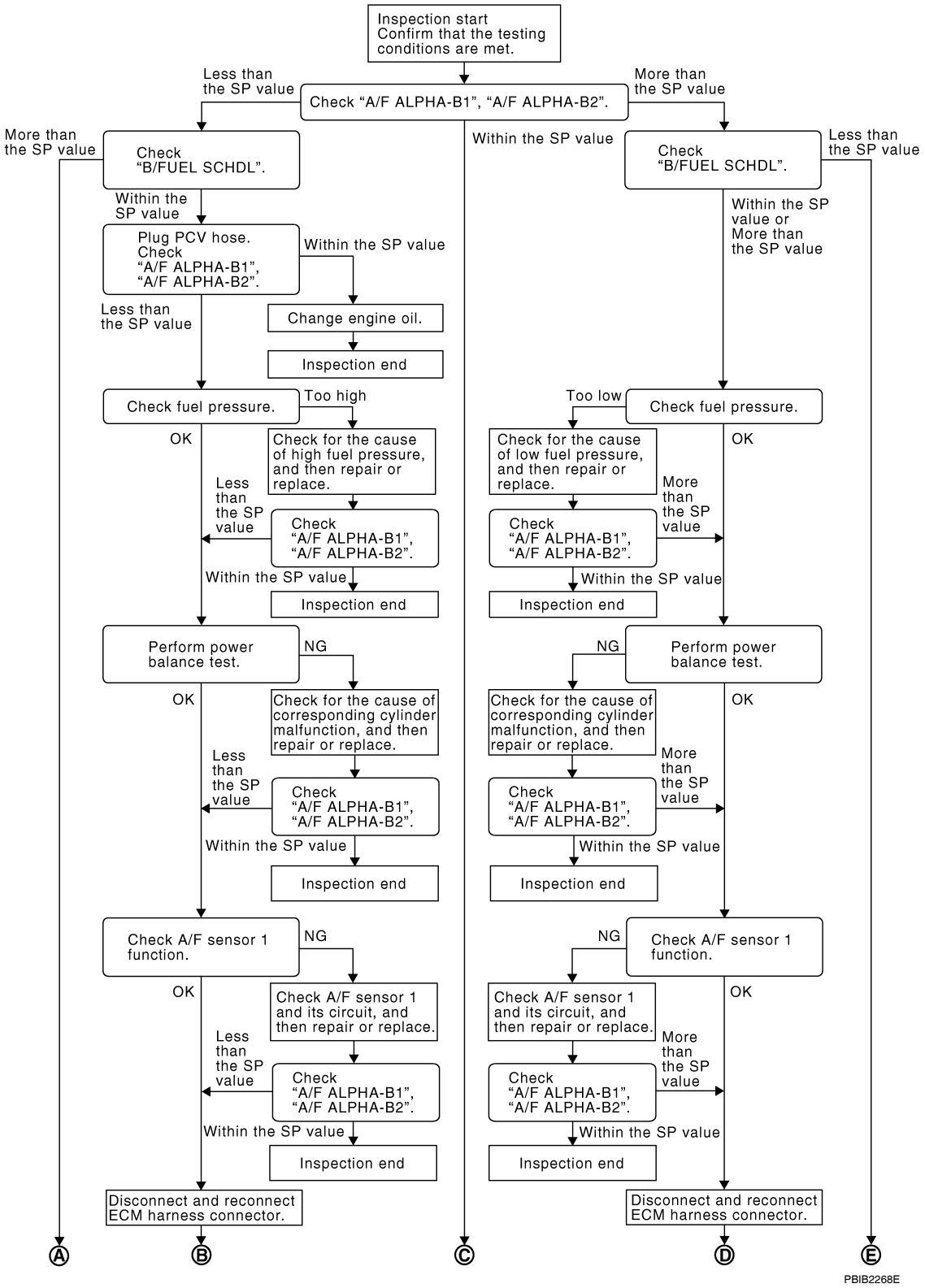
Inspection start
Confirm that the testing conditions are met.
Check "A/F ALPHA-B1", "A/F ALPHA-B2".
Less than the SP value
More than the SP value
Within the SP value
Check "B/FUEL SCHDL".
Plug PCV hose. Check "A/F ALPHA-B1", "A/F ALPHA-B2".
Change engine oil.
Inspection end
Check fuel pressure.
Too high
Too low
OK
Check for the cause of high fuel pressure, and then repair or replace.
Check for the cause of low fuel pressure, and then repair or replace.
Check "A/F ALPHA-B1", "A/F ALPHA-B2".
Within the SP value or More than the SP value
Perform power balance test.
NG
Check for the cause of corresponding cylinder malfunction, and then repair or replace.
Check A/F sensor 1 function.
Check A/F sensor 1 and its circuit, and then repair or replace.
Disconnect and reconnect ECM harness connector.
A
B
C
D
E
PBIB2268E

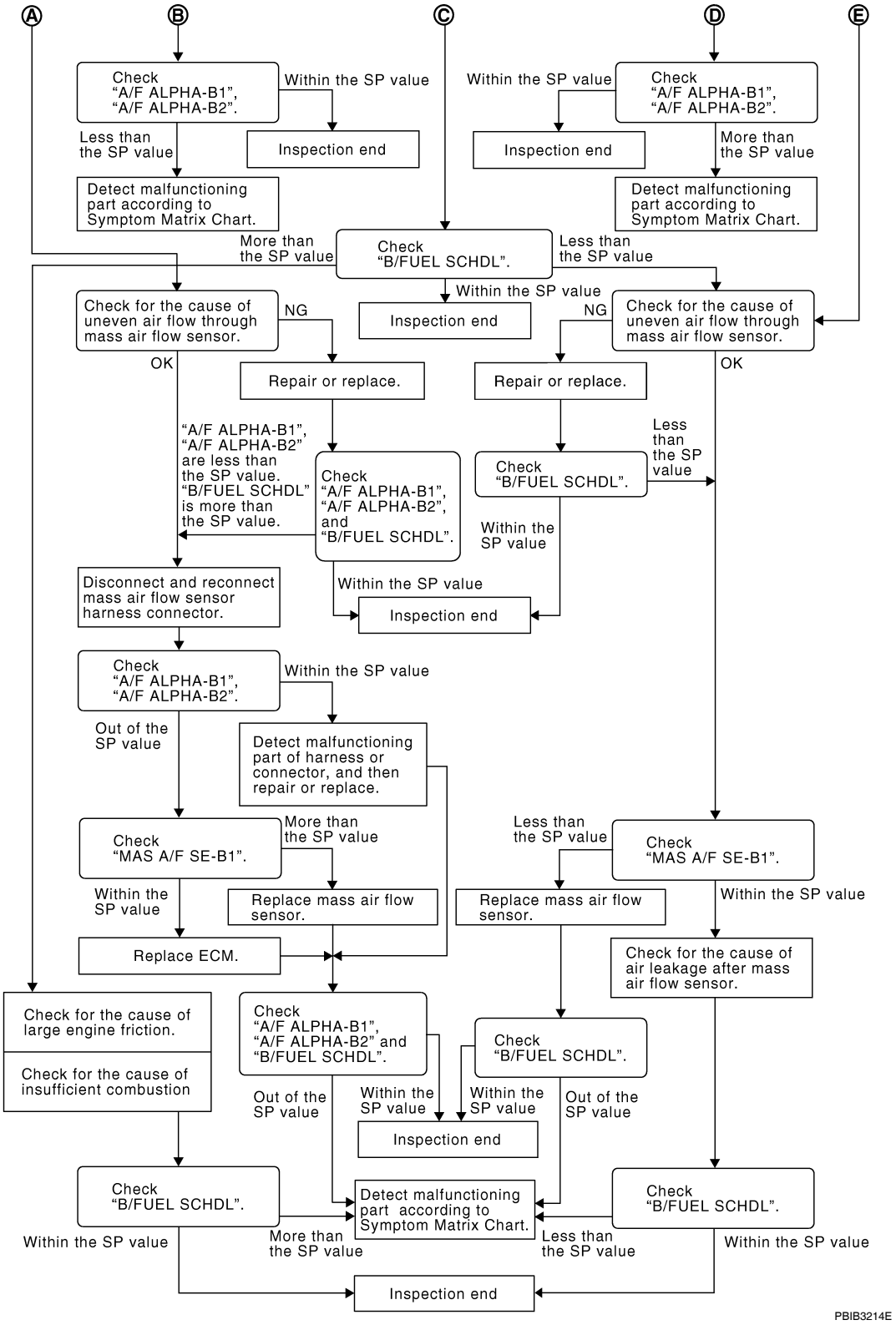

DETAILED PROCEDURE

1. CHECK "A/F ALPHA-B1", "A/F ALAPHA-B2"

1. Start engine.
2. Confirm that the testing conditions are met. Refer to EC-1237, "Testing Condition".
3. Select "A/F ALPHA-B1", "A/F ALPHA-B2" in "SPEC" of "DATA MONITOR" mode, and check that the each indication is within the SP value.
   NOTE:

Check “A/F ALPHA-B1”, “A/F ALPHA-B2” for approximately 1 minute because they may fluctuate. It is NG if the indication is out of the SP value even a little.

OK or NG

OK >> GO TO 17.
NG (Less than the SP value)>>GO TO 2.
NG (More than the SP value)>>GO TO 3.

2. CHECK “B/FUEL SCHDL”

Select “B/FUEL SCHDL” in “SPEC” of “DATA MONITOR” mode, and check that the indication is within the SP value.

OK or NG

OK >> GO TO 4.
NG (More than the SP value)>>GO TO 19.

3. CHECK “B/FUEL SCHDL”

Select “B/FUEL SCHDL” in “SPEC” of “DATA MONITOR” mode, and check that the indication is within the SP value.

OK or NG

OK >> GO TO 6.
NG (More than the SP value)>>GO TO 6.
NG (Less than the SP value)>>GO TO 25.

4. CHECK “A/F ALPHA-B1”, “A/F ALPHA-B2”

1. Stop the engine.
2. Disconnect PCV hose, and then plug it.
3. Start engine.
4. Select “A/F ALPHA-B1”, “A/F ALPHA-B2” in “SPEC” of “DATA MONITOR” mode, and check that the each indication is within the SP value.

OK or NG

OK >> GO TO 5.
NG >> GO TO 6.

5. CHANGE ENGINE OIL

1. Stop the engine.
2. Change engine oil. Refer to MA-37, "ENGINE OIL : Changing Engine Oil".
   NOTE:
   This symptom may occur when a large amount of gasoline is mixed with engine oil because of driving conditions (such as when engine oil temperature does not rise enough since a journey distance is too short during winter). The symptom will not be detected after changing engine oil or changing driving condition.

>> **INSPECTION END**

6. CHECK FUEL PRESSURE

Check fuel pressure. (Refer to EC-1195, "Fuel Pressure Check".)

OK or NG

OK >> GO TO 9.
NG (Fuel pressure is too high)>>Replace fuel pressure regulator, refer to EC-1195, "Fuel Pressure Check".
GO TO 8.
NG (Fuel pressure is too low)>>GO TO 7.

7. DETECT MALFUNCTIONING PART

1. Check the following.
- Clogged and bent fuel hose and fuel tube
- Clogged fuel filter
- Fuel pump and its circuit (Refer to EC-1652.)
2. If NG, repair or replace the malfunctioning part. (Refer to EC-1195, "Fuel Pressure Check".)
   If OK, replace fuel pressure regulator.

>> GO TO 8.

8. CHECK “A/F ALPHA-B1”, “A/F ALPHA-B2”

1. Start engine.
2. Select “A/F ALPHA-B1”, “A/F ALPHA-B2” in “SPEC” of “DATA MONITOR” mode, and check that the each indication is within the SP value.

OK or NG

OK >> **INSPECTION END**
NG >> GO TO 9.

9. PERFORM POWER BALANCE TEST

1. Perform “POWER BALANCE” in “ACTIVE TEST” mode.
2. Check that the each cylinder produces a momentary engine speed drop.

OK or NG

OK >> GO TO 12.
NG >> GO TO 10.

10. DETECT MALFUNCTIONING PART

1. Check the following.
- Ignition coil and its circuit (Refer to EC-1657.)
- Fuel injector and its circuit (Refer to EC-1647.)
- Intake air leakage
- Low compression pressure (Refer to EM-175, "On-Vehicle Service".)
2. If NG, repair or replace the malfunctioning part.
   If OK, replace fuel injector. (It may be caused by leakage from fuel injector or clogging.)

>> GO TO 11.

11. CHECK “A/F ALPHA-B1”, “A/F ALPHA-B2”

1. Start engine.
2. Select “A/F ALPHA-B1”, “A/F ALPHA-B2” in “SPEC” of “DATA MONITOR” mode, and check that the each indication is within the SP value.

OK or NG

OK >> **INSPECTION END**
NG >> GO TO 12.

12. CHECK A/F SENSOR 1 FUNCTION

Perform all DTC Confirmation Procedure related with A/F sensor 1.
- For DTC P0130, P0150 refer to EC-1321, "DTC Confirmation Procedure".
- For DTC P0131, P0151 refer to EC-1329, "DTC Confirmation Procedure".
- For DTC P0132, P0152 refer to EC-1337, "DTC Confirmation Procedure".
- For DTC P0133, P0153 refer to EC-1345, "DTC Confirmation Procedure".
- For DTC P2A00, P2A03 refer to EC-1625, "DTC Confirmation Procedure".

OK or NG

OK >> GO TO 15.
NG >> GO TO 13.

13. CHECK A/F SENSOR 1 CIRCUIT

Perform Diagnostic Procedure according to corresponding DTC.

>> GO TO 14.

14. CHECK “A/F ALPHA-B1”, “A/F ALPHA-B2”

1. Start engine.
2. Select “A/F ALPHA-B1”, “A/F ALPHA-B2” in “SPEC” of “DATA MONITOR” mode, and check that the each indication is within the SP value.

OK or NG

OK >> **INSPECTION END**
NG >> GO TO 15.

15. DISCONNECT AND RECONNECT ECM HARNESS CONNECTOR

1. Stop the engine.
2. Disconnect ECM harness connector. Check pin terminal and connector for damage, and then reconnect it.

>> GO TO 16.

16. CHECK “A/F ALPHA-B1”, “A/F ALPHA-B2”

1. Start engine.
2. Select “A/F ALPHA-B1”, “A/F ALPHA-B2” in “SPEC” of “DATA MONITOR” mode, and check that the each indication is within the SP value.

OK or NG

OK >> **INSPECTION END**
NG >> Detect malfunctioning part according to EC-1204, "Symptom Matrix Chart".

17. CHECK “B/FUEL SCHDL”

Select “B/FUEL SCHDL” in “SPEC” of “DATA MONITOR” mode, and check that the indication is within the SP value.

OK or NG

OK >> **INSPECTION END**
NG (More than the SP value)>>GO TO 18.
NG (Less than the SP value)>>GO TO 25.

18. DETECT MALFUNCTIONING PART

1. Check for the cause of large engine friction. Refer to the following.
- Engine oil level is too high
- Engine oil viscosity
- Belt tension of alternator, A/C compressor, etc. is excessive
- Noise from engine
- Noise from transmission, etc.
2. Check for the cause of insufficient combustion. Refer to the following.
- Valve clearance malfunction
- Intake valve timing control function malfunction
- Camshaft sprocket installation malfunction, etc.

>> Repair or replace malfunctioning part, and then GO TO 30.

19. CHECK INTAKE SYSTEM

Check for the cause of uneven air flow through mass air flow sensor. Refer to the following.
- Crushed air ducts
- Malfunctioning seal of air cleaner element
- Uneven dirt of air cleaner element
- Improper specification of intake air system

OK or NG

OK >> GO TO 21.
NG >> Repair or replace malfunctioning part, and then GO TO 20.

20. CHECK “A/F ALPHA-B1”, “A/F ALPHA-B2” AND “B/FUEL SCHDL”

Select “A/F ALPHA-B1”, “A/F ALPHA-B1” and “B/FUEL SCHDL” in “SPEC” of “DATA MONITOR” mode, and check that the each indication is within the SP value.

OK or NG

OK >> **INSPECTION END**
NG (“B/FUEL SCHDL” is more, “A/F ALPHA-B1”, “A/F ALPHA-B2” is less than the SP value)>>GO TO 21.

21. DISCONNECT AND RECONNECT MASS AIR FLOW SENSOR HARNESS CONNECTOR

1. Stop the engine.

2. Disconnect mass air flow sensor harness connector. Check pin terminal and connector for damage and then reconnect it again.

>> GO TO 22.

22. CHECK “A/F ALPHA-B1”, “A/F ALPHA-B2”

1. Start engine.
2. Select “A/F ALPHA-B1”, “A/F ALPHA-B2” in “SPEC” of “DATA MONITOR” mode, and check that the each indication is within the SP value.

OK or NG

OK >> 1. Detect malfunctioning part of mass air flow sensor circuit and repair it. Refer to EC-1282.
2. GO TO 29.

NG >> GO TO 23.

23. CHECK “MAS A/F SE-B1”

Select “MAS A/F SE-B1” in “SPEC” of “DATA MONITOR” mode, and check that the indication is within the SP value.

OK or NG

OK >> GO TO 24.

NG (More than the SP value)>>Replace mass air flow sensor, and then GO TO 29.

24. REPLACE ECM

1. Replace ECM.
2. Perform initialization of NVIS(NATS) system and registration of all NVIS(NATS) ignition key IDs. Refer to BL-171, "ECM Re-communicating Function".
3. Perform EC-1193, "VIN Registration".
4. Perform EC-1193, "Accelerator Pedal Released Position Learning".
5. Perform EC-1193, "Throttle Valve Closed Position Learning".
6. Perform EC-1193, "Idle Air Volume Learning".

>> GO TO 29.

25. CHECK INTAKE SYSTEM

Check for the cause of uneven air flow through mass air flow sensor. Refer to the following.

- Crushed air ducts
- Malfunctioning seal of air cleaner element
- Uneven dirt of air cleaner element
- Improper specification of intake air system

OK or NG

OK >> GO TO 27.

NG >> Repair or replace malfunctioning part, and then GO TO 26.

26. CHECK “B/FUEL SCHDL”

Select “B/FUEL SCHDL” in “SPEC” of “DATA MONITOR” mode, and check that the indication is within the SP value.

OK or NG

OK >> **INSPECTION END**

NG (Less than the SP value)>>GO TO 27.

27. CHECK “MAS A/F SE-B1”

Select “MAS A/F SE-B1” in “SPEC” of “DATA MONITOR” mode, and check that the indication is within the SP value.

OK or NG

OK >> GO TO 28.

NG (Less than the SP value)>>Replace mass air flow sensor, and then GO TO 30.

28. CHECK INTAKE SYSTEM

Check for the cause of air leak after the mass air flow sensor. Refer to the following.

- Disconnection, looseness, and cracks in air duct
- Looseness of oil filler cap
- Disconnection of oil level gauge
- Open stuck, breakage, hose disconnection, or cracks of PCV valve
- Disconnection or cracks of EVAP purge hose, open stuck of EVAP canister purge volume control solenoid valve
- Malfunctioning seal of rocker cover gasket
- Disconnection, looseness, or cracks of hoses, such as vacuum hose, connecting to intake air system parts
- Malfunctioning seal of intake air system, etc.

>> GO TO 30.

29. CHECK “A/F ALPHA-B1”, “A/F ALPHA-B2” AND “B/FUEL SCHDL”

Select “A/F ALPHA-B1”, “A/F ALPHA-B2” and “B/FUEL SCHDL” in “SPEC” of “DATA MONITOR” mode, and check that the each indication is within the SP value.

OK or NG

OK >> **INSPECTION END**
NG >> Detect malfunctioning part according to EC-1204, "Symptom Matrix Chart".

30. CHECK “B/FUEL SCHDL”

Select “B/FUEL SCHDL” in “SPEC” of “DATA MONITOR” mode, and then check that the indication is within the SP value.

OK or NG

OK >> **INSPECTION END**
NG >> Detect malfunctioning part according to EC-1204, "Symptom Matrix Chart".

TROUBLE DIAGNOSIS FOR INTERMITTENT INCIDENT

Description

INFOID:0000000005285762

Intermittent incidents may occur. In many cases, the malfunction resolves itself (the part or circuit function returns to normal without intervention). It is important to realize that the symptoms described in the customer's complaint often do not recur on (1st trip) DTC visits. Realize also that the most frequent cause of Intermittent Incidents occurrences is poor electrical connections. Because of this, the conditions under which the incident occurred may not be clear. Therefore, circuit checks made as part of the standard diagnostic procedure may not indicate the specific malfunctioning area.

Common Intermittent Incidents Report Situations

STEP in Work Flow	Situation
2	The CONSULT-III is used. The SELF-DIAG RESULTS screen shows time data other than 0 or [1t].
3 or 4	The symptom described by the customer does not recur.
5	(1st trip) DTC does not appear during the DTC Confirmation Procedure.
10	The Diagnostic Procedure for PXXXX does not indicate the malfunctioning area.

Diagnosis Procedure

INFOID:0000000005285763

1. INSPECTION START

Erase (1st trip) DTCs.
Refer to EC-1155, "Emission-related Diagnostic Information".

>> GO TO 2.

2. CHECK GROUND TERMINALS

Check ground terminals for corroding or loose connection.
Refer to EC-1251, "Ground Inspection".

OK or NG

OK >> GO TO 3.
NG >> Repair or replace.

3. SEARCH FOR ELECTRICAL INCIDENT

Perform GI-26, "How to Perform Efficient Diagnosis for an Electrical Incident", “INCIDENT SIMULATION TESTS”.

OK or NG

OK >> GO TO 4.
NG >> Repair or replace.

4. CHECK CONNECTOR TERMINALS

Refer to GI-23, "How to Check Terminal", “HOW TO PROBE CONNECTORS”, “How to Check Enlarged Contact Spring of Terminal”.

OK or NG

OK >> **INSPECTION END**
NG >> Repair or replace connector.

POWER SUPPLY AND GROUND CIRCUIT

Wiring Diagram

INFOID:0000000005285764

EC-MAIN-01

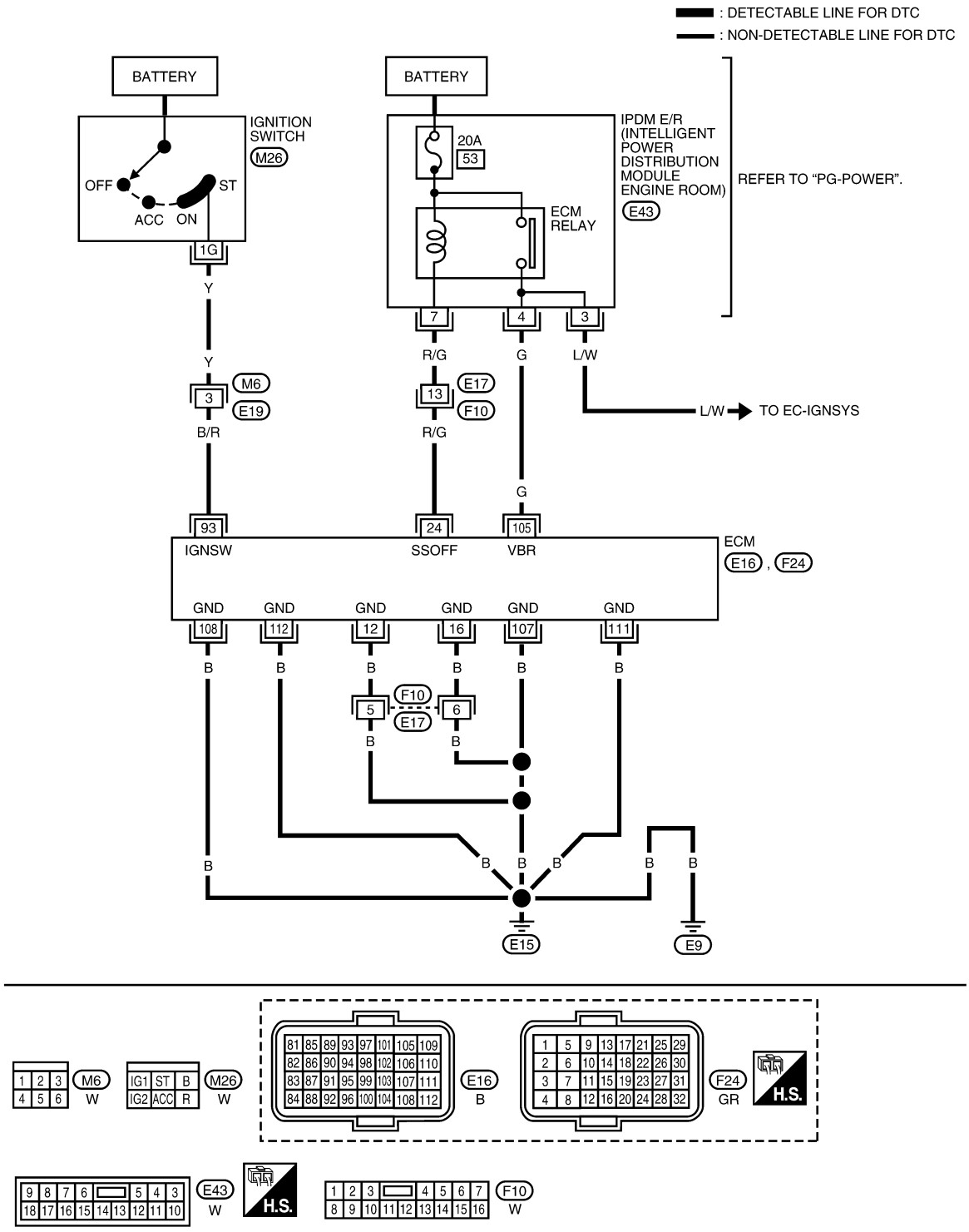

AABWA0253GB

Specification data are reference values and are measured between each terminal and ground.

CAUTION:

Never use ECM ground terminals when measuring input/output voltage. Doing so may result in damage to the ECM's transistor. Use a ground other than ECM terminals, such as the ground.

TERMINAL NO.	WIRE COLOR	ITEM	CONDITION	DATA (DC Voltage)
12 16	B B	ECM ground	**[Engine is running]** • Idle speed	Body ground
24	R/G	ECM relay (Self shut-off)	**[Engine is running]** **[Ignition switch: OFF]** • For a few seconds after turning ignition switch OFF	0 - 1.0 V
			[Ignition switch: OFF] • More than a few seconds after turning ignition switch OFF	BATTERY VOLTAGE (11 - 14 V)
93	B/R	Ignition switch	**[Ignition switch: OFF]**	0 V
			[Ignition switch: ON]	BATTERY VOLTAGE (11 - 14 V)
105	G	Power supply for ECM	**[Ignition switch: ON]**	BATTERY VOLTAGE (11 - 14 V)
107 108	B B	ECM ground	**[Engine is running]** • Idle speed	Body ground
111 112	B B	ECM ground	**[Engine is running]** • Idle speed	Body ground

Diagnosis Procedure

INFOID:0000000005285765

1. INSPECTION START

Start engine.
Is engine running?

Yes or No

Yes >> GO TO 8.
No >> GO TO 2.

2. CHECK ECM POWER SUPPLY CIRCUIT-I

1. Turn ignition switch OFF and then ON.
2. Check voltage between ECM terminal 93 and ground with CONSULT-III or tester.

Voltage: Battery voltage

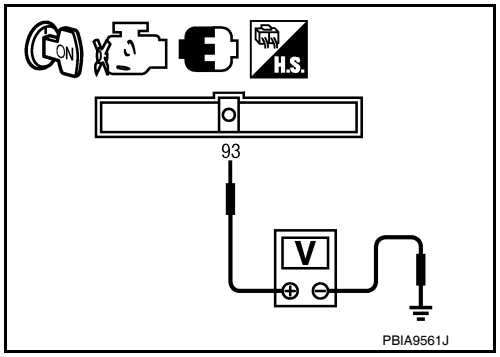

OK or NG

OK >> GO TO 4.
NG >> GO TO 3.

3. DETECT MALFUNCTIONING PART

Check the following.
- Harness connectors M6, E19
- Harness for open or short between ECM and ignition switch

>> Repair open circuit or short to ground or short to power in harness or connectors.

4. CHECK GROUND CONNECTIONS

1. Turn ignition switch OFF.
2. Loosen and retighten ground screws on the body.

Refer to EC-1251, "Ground Inspection".

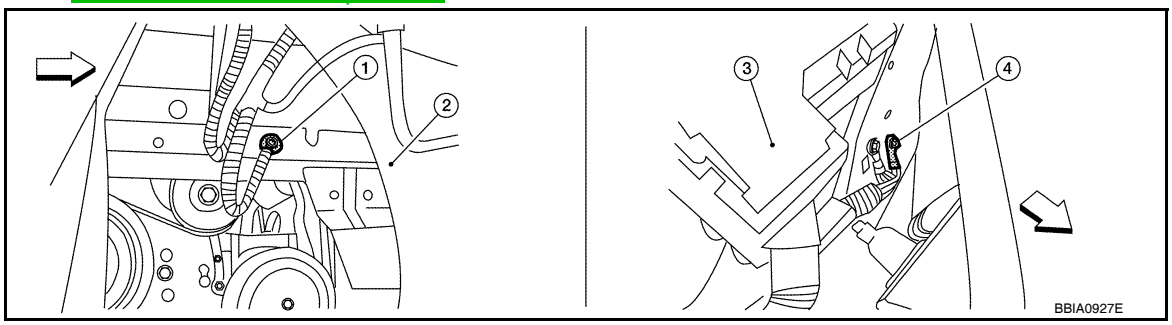

⇦: Vehicle front

1. Body ground E9 (view with front wheel RH and fender protector RH removed.)
2. Washer tank
3. Fuse and fusible link box
4. Body ground E15

OK or NG

OK >> GO TO 5.
NG >> Repair or replace ground connections.

5. CHECK ECM GROUND CIRCUIT FOR OPEN AND SHORT-I

1. Disconnect ECM harness connector.
2. Check harness continuity between ECM terminals 12, 16, 107, 108, 111, 112 and ground. Refer to Wiring Diagram.

Continuity should exist.

3. Also check harness for short to power.

OK or NG

OK >> GO TO 7.
NG >> GO TO 6.

6. DETECT MALFUNCTIONING PART

Check the following.
- Harness connectors F10, E17
- Harness for open or short between ECM and ground

>> Repair open circuit or short to power in harness or connectors.

7. CHECK ECM POWER SUPPLY CIRCUIT-II

1. Reconnect ECM harness connector.
2. Turn ignition switch ON.
3. Check voltage between IPDM E/R terminal 3 and ground with CONSULT-III or tester.

Voltage: Battery voltage

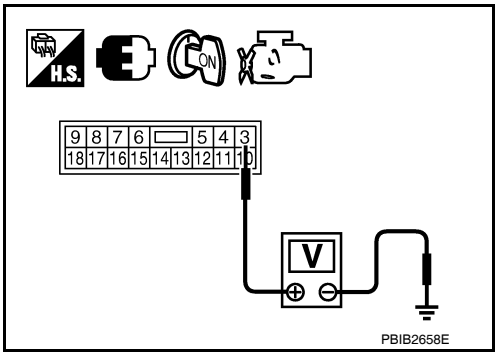

OK or NG

OK >> Go to EC-1657.
NG >> GO TO 8.

8. CHECK ECM POWER SUPPLY CIRCUIT-III

1. Turn ignition switch OFF and wait at least 10 seconds.
2. Turn ignition switch ON and then OFF.

3. Check voltage between ECM terminal 105 and ground with CONSULT-III or tester.

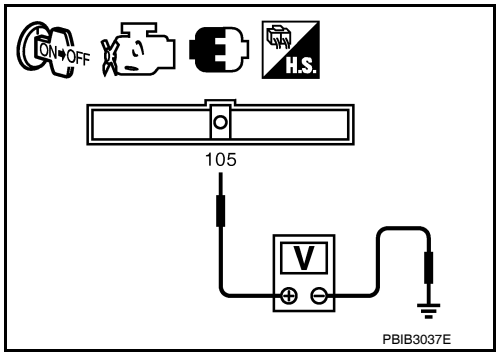

Voltage: After turning ignition switch OFF, battery voltage will exist for a few seconds, then drop approximately 0 V.

OK or NG

OK >> GO TO 14.
NG (Battery voltage does not exist.)>>GO TO 9.
NG (Battery voltage exists for more than a few seconds.)>>GO TO 11.

9. CHECK ECM POWER SUPPLY CIRCUIT-IV

1. Turn ignition switch OFF and wait at least 10 seconds.
2. Check voltage between ECM terminal 24 and ground with CONSULT-III or tester.

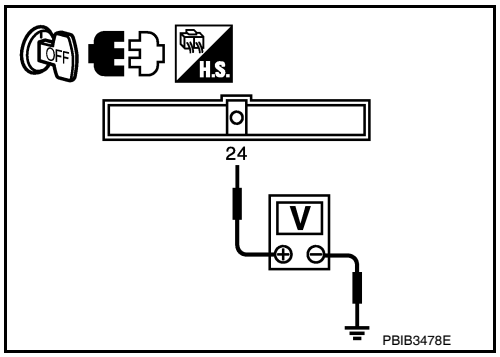

Voltage: Battery voltage

OK or NG

OK >> GO TO 10.
NG >> GO TO 11.

10. CHECK ECM POWER SUPPLY CIRCUIT-V

1. Disconnect ECM harness connector.
2. Disconnect IPDM E/R harness connector E43.
3. Check harness continuity between ECM terminal 105 and IPDM E/R terminal 4. Refer to Wiring Diagram.

Continuity should exist.

4. Also check harness for short to ground and short to power.

OK or NG

OK >> GO TO 17.
NG >> Repair open circuit or short to ground or short to power in harness or connectors.

11. CHECK ECM POWER SUPPLY CIRCUIT-VI

1. Disconnect ECM harness connector.
2. Disconnect IPDM E/R harness connector E43.
3. Check harness continuity between ECM terminal 24 and IPDM E/R terminal 7. Refer to Wiring Diagram.

Continuity should exist.

4. Also check harness for short to ground and short to power.

OK or NG

OK >> GO TO 13.
NG >> GO TO 12.

12. DETECT MALFUNCTIONING PART

Check the following.
- Harness connectors E17, F10
- Harness for open or short between ECM and IPDM E/R

>> Repair open circuit or short to ground or short to power in harness or connectors.

13. CHECK 20 A FUSE

1. Disconnect 20 A fuse from IPDM E/R.
2. Check 20 A fuse.

OK or NG

OK >> GO TO 17.
NG >> Replace 20 A fuse.

14. CHECK GROUND CONNECTIONS

Loosen and retighten ground screws on the body.
Refer to EC-1251, "Ground Inspection".

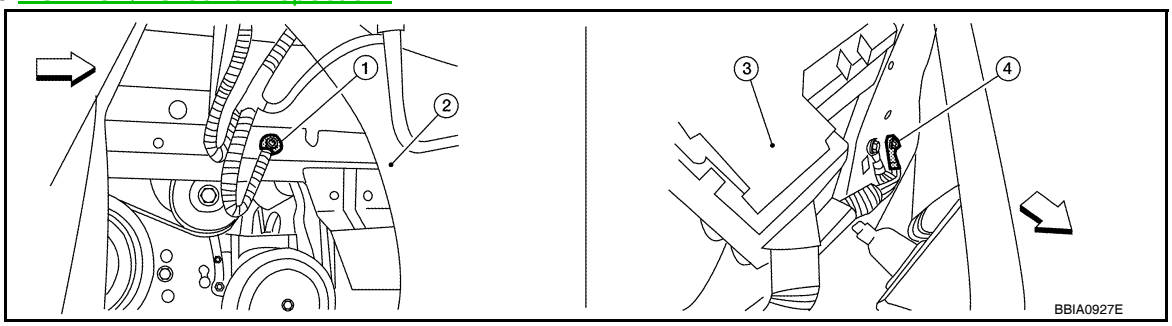

⇦: Vehicle front

1. Body ground E9 (view with front wheel RH and fender protector RH removed.)
2. Washer tank
3. Fuse and fusible link box
4. Body ground E15

OK or NG

OK >> GO TO 15.
NG >> Repair or replace ground connections.

15. CHECK ECM GROUND CIRCUIT FOR OPEN AND SHORT-II

1. Disconnect ECM harness connector.
2. Check harness continuity between ECM terminals 12, 16, 107, 108, 111, 112 and ground.
   Refer to Wiring Diagram.

   Continuity should exist.

3. Also check harness for short to power.

OK or NG

OK >> GO TO 17.
NG >> GO TO 16.

16. DETECT MALFUNCTIONING PART

Check the following.
- Harness connectors F10, E17
- Harness for open or short between ECM and ground

>> Repair open circuit or short to power in harness or connectors.

17. CHECK INTERMITTENT INCIDENT

Refer to EC-1245.

OK or NG

OK >> Replace IPDM E/R. Refer to PG-17.
NG >> Repair open circuit or short to power in harness or connectors.

Ground Inspection

INFOID:0000000005285766

Ground connections are very important to the proper operation of electrical and electronic circuits. Ground connections are often exposed to moisture, dirt and other corrosive elements. The corrosion (rust) can become an unwanted resistance. This unwanted resistance can change the way a circuit works.
Electronically controlled circuits are very sensitive to proper grounding. A loose or corroded ground can drastically affect an electronically controlled circuit. A poor or corroded ground can easily affect the circuit. Even when the ground connection looks clean, there can be a thin film of rust on the surface.
When inspecting a ground connection follow these rules:

- Remove the ground bolt or screw.
- Inspect all mating surfaces for tarnish, dirt, rust, etc.
- Clean as required to assure good contact.
- Reinstall bolt or screw securely.
- Inspect for “add-on” accessories which may be interfering with the ground circuit.
- If several wires are crimped into one ground eyelet terminal, check for proper crimps. Check that all of the wires are clean, securely fastened and providing a good ground path. If multiple wires are cased in one eyelet check that no ground wires have excess wire insulation.

For detailed ground distribution information, refer to PG-29, "Ground Distribution".

Ground Inspection

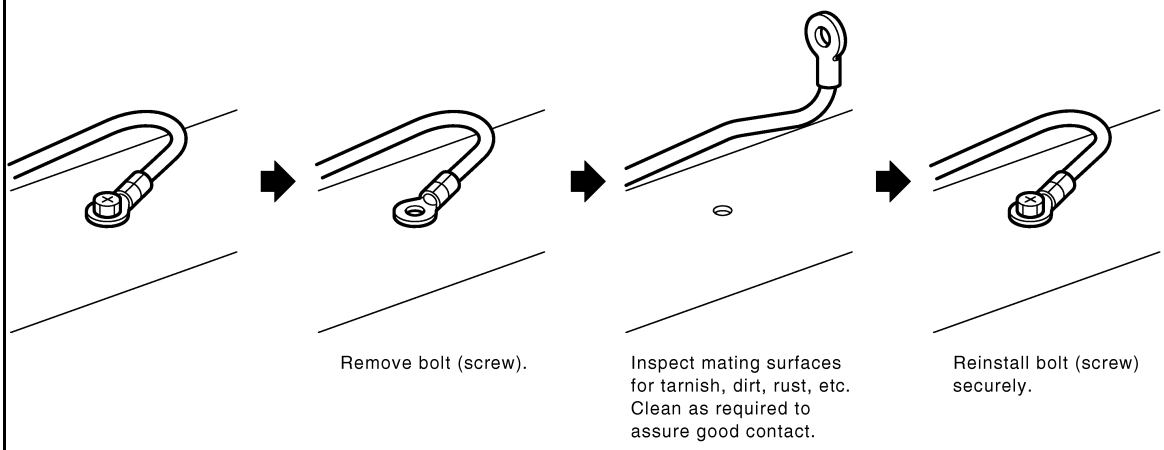

DTC U0101 CAN COMMUNICATION LINE

Description

INFOID:0000000005285767

CAN (Controller Area Network) is a serial communication line for real time application. It is an on-vehicle multiplex communication line with high data communication speed and excellent error detection ability. Many electronic control units are equipped onto a vehicle, and each control unit shares information and links with other control units during operation (not independent). In CAN communication, control units are connected with 2 communication lines (CAN H line, CAN L line) allowing a high rate of information transmission with less wiring. Each control unit transmits/receives data but selectively reads required data only.

On Board Diagnosis Logic

INFOID:0000000005285768

This self-diagnosis has the one trip detection logic.

DTC No.	Trouble diagnosis name	DTC detecting condition	Possible cause
U0101 0101	Lost communication with TCM	When ECM is not transmitting or receiving CAN communication signal of OBD (emission-related diagnosis) with TCM for 2 seconds or more.	• CAN communication line between TCM and ECM (CAN communication line is open or shorted.)

DTC Confirmation Procedure

INFOID:0000000005285769

1. Turn ignition switch ON and wait at least 3 seconds.
2. Check DTC.
3. If DTC is detected, go to EC-1255, "Diagnosis Procedure".

Wiring Diagram

INFOID:0000000005285770

EC-CAN-01

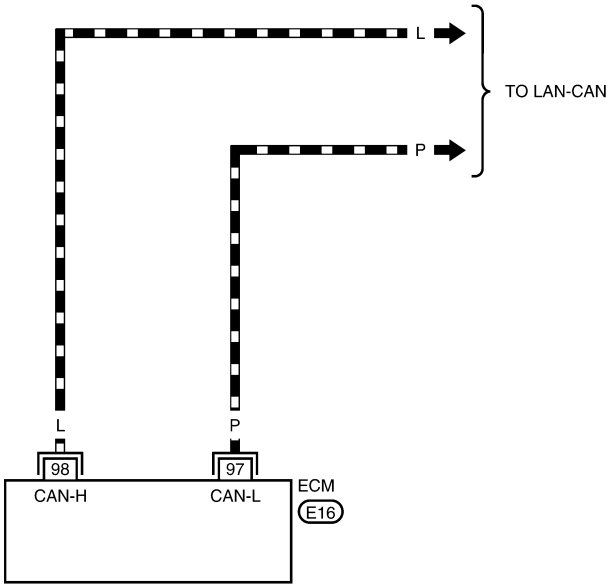

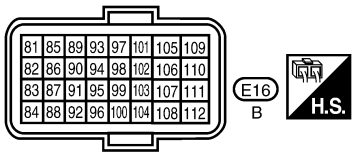

BBWA3021E

Diagnosis Procedure

INFOID:0000000005285771

Go to LAN-17, "Trouble Diagnosis Flow Chart".

DTC U0140 CAN COMMUNICATION LINE

Description

INFOID:0000000005285772

CAN (Controller Area Network) is a serial communication line for real time application. It is an on-vehicle multiplex communication line with high data communication speed and excellent error detection ability. Many electronic control units are equipped onto a vehicle, and each control unit shares information and links with other control units during operation (not independent). In CAN communication, control units are connected with 2 communication lines (CAN H line, CAN L line) allowing a high rate of information transmission with less wiring. Each control unit transmits/receives data but selectively reads required data only.

On Board Diagnosis Logic

INFOID:0000000005285773

This self-diagnosis has the one trip detection logic.

DTC No.	Trouble diagnosis name	DTC detecting condition	Possible cause
U0140 0140	Lost communication with BCM	When ECM is not transmitting or receiving CAN communication signal of OBD (emission related diagnosis) with BCM for 2 seconds or more.	• CAN communication line between BCM and ECM • CAN communication line open or shorted

DTC Confirmation Procedure

INFOID:0000000005285774

1. Turn ignition switch ON and wait at least 3 seconds.
2. Check DTC.
3. If DTC is detected, go to EC-1255, "Diagnosis Procedure".

Wiring Diagram

INFOID:0000000005285775

EC-CAN-01

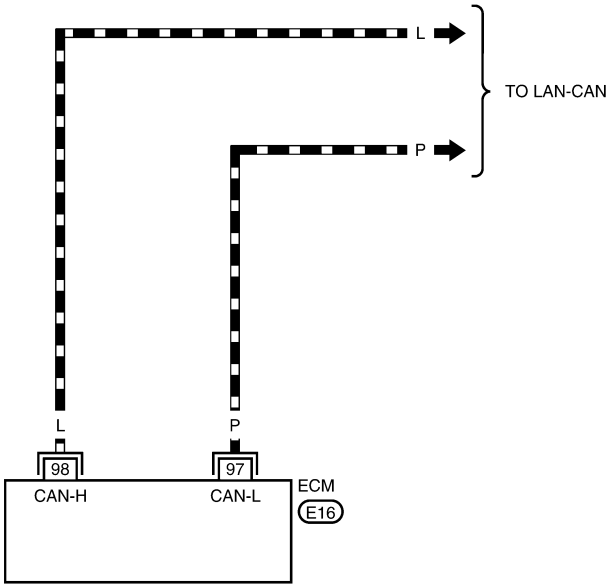

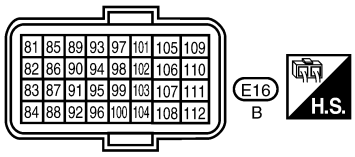

BBWA3021E

Diagnosis Procedure

INFOID:0000000005285776

Go to LAN-17, "Trouble Diagnosis Flow Chart".

DTC U1001 CAN COMMUNICATION LINE

Description

INFOID:0000000005285777

CAN (Controller Area Network) is a serial communication line for real time application. It is an on-vehicle multiplex communication line with high data communication speed and excellent error detection ability. Many electronic control units are equipped onto a vehicle, and each control unit shares information and links with other control units during operation (not independent). In CAN communication, control units are connected with 2 communication lines (CAN H line, CAN L line) allowing a high rate of information transmission with less wiring. Each control unit transmits/receives data but selectively reads required data only.

On Board Diagnosis Logic

INFOID:0000000005285778

The MIL will not illuminate for this self-diagnosis.

DTC No.	Trouble diagnosis name	DTC detecting condition	Possible cause
U1001 1001	CAN communication line	When ECM is not transmitting or receiving CAN communication signal other than OBD (emission-related diagnosis) for 2 seconds or more.	• Harness or connectors (CAN communication line is open or shorted.)

DTC Confirmation Procedure

INFOID:0000000005285779

1. Turn ignition switch ON and wait at least 3 seconds.
2. Check 1st trip DTC.
3. If 1st trip DTC is detected, go to EC-1257, "Diagnosis Procedure".

Wiring Diagram

INFOID:0000000005285780

EC-CAN-01

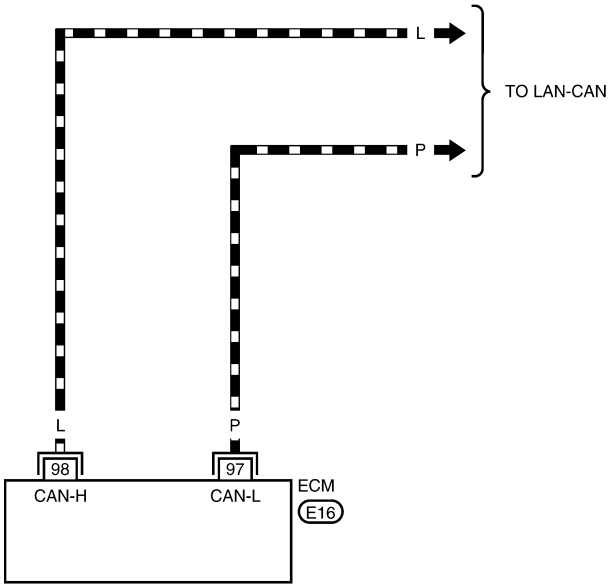

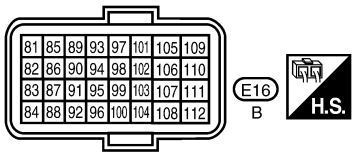

BBWA3021E

Diagnosis Procedure

INFOID:0000000005285781

Go to LAN-17, "Trouble Diagnosis Flow Chart".

DTC P0011 IVT CONTROL

Description

INFOID:0000000005285782

SYSTEM DESCRIPTION

Sensor	Input signal to ECM	ECM function	Actuator
Crankshaft position sensor (POS) Camshaft position sensor (PHASE)	Engine speed and piston position	Intake valve timing control	Intake valve timing control solenoid valve
Engine coolant temperature sensor	Engine coolant temperature		
Combination meter	Vehicle speed*		

*: This signal is sent to the ECM through CAN communication line.

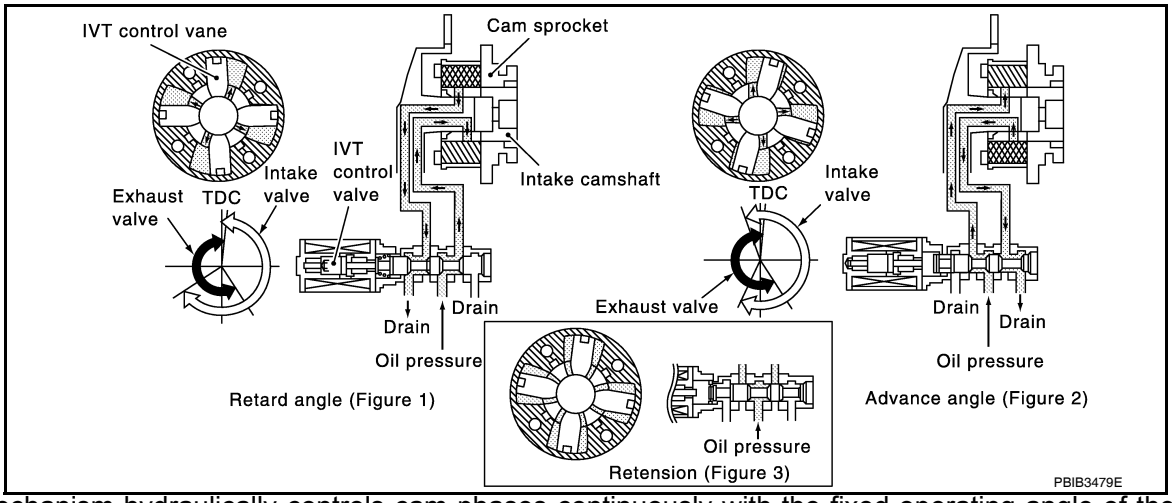

This mechanism hydraulically controls cam phases continuously with the fixed operating angle of the intake valve. The ECM receives signals such as crankshaft position, camshaft position, engine speed, and engine coolant temperature. Then, the ECM sends ON/OFF pulse duty signals to the intake valve timing control solenoid valve depending on driving status. This makes it possible to control the shut/open timing of the intake valve to increase engine torque in low/mid speed range and output in high-speed range.

CONSULT-III Reference Value in Data Monitor Mode

INFOID:0000000005285783

Specification data are reference values.

Monitor item	Condition		Specification
INT/V TIM (B1)	• Engine: After warming up • Selector lever: P or N (CVT), Neutral (M/T) • Air conditioner switch: OFF • No load	Idle	–5° - 5°CA
		2,000 rpm	Approx. 0° - 20°CA
INT/V SOL (B1)	• Engine: After warming up • Selector lever: P or N (CVT), Neutral (M/T) • Air conditioner switch: OFF • No load	Idle	0%
		2,000 rpm	Approx. 0% - 60%

On Board Diagnosis Logic

INFOID:0000000005285784

DTC No.	Trouble diagnosis name	Detecting condition	Possible cause
P0011 0011	Intake valve timing control performance	There is a gap between angle of target and phase-control angle degree.	• Crankshaft position sensor (POS) • Camshaft position sensor (PHASE) • Intake valve timing control solenoid valve • Accumulation of debris to the signal pick-up portion of the camshaft • Timing chain installation • Foreign matter caught in the oil groove for intake valve timing control

FAIL-SAFE MODE

ECM enters in fail-safe mode when the malfunction is detected.

Detected items	Engine operating condition in fail-safe mode
Intake valve timing control	The signal is not energized to the solenoid valve and the valve control does not function

DTC Confirmation Procedure

INFOID:0000000005285785

CAUTION:
Always drive at a safe speed.
NOTE:
- **If DTC P0011 is displayed with DTC P0075, first perform trouble diagnosis for DTC P0075. See EC-1277.**
- If DTC Confirmation Procedure has been previously conducted, always turn ignition switch OFF and wait at least 10 seconds before conducting the next test.

TESTING CONDITION:
Before performing the following procedure, confirm that battery voltage is between 10 V and 16 V at idle.

WITH CONSULT-III

1. Turn ignition switch ON and select “DATA MONITOR” mode with CONSULT-III.
2. Start engine and warm it up to the normal operating temperature.
3. Maintain the following conditions for at least 6 consecutive seconds.
   Hold the accelerator pedal as steady as possible.

ENG SPEED	1,200 - 2,000 rpm (A constant rotation is maintained.)
COOLAN TEMP/S	More than 60°C (140°F)
B/FUEL SCHDL	More than 3.5 msec
Selector lever	P or N position (CVT) Neutral position (M/T)

4. Let engine idle for 10 seconds.
5. Check 1st trip DTC.
6. If 1st trip DTC is detected, go to EC-1260, "Diagnosis Procedure".
   If 1st trip DTC is not detected, go to next step.
7. Maintain the following conditions for at least 20 consecutive seconds.

ENG SPEED	1,200 - 3,175 rpm (A constant rotation is maintained.)
COOLAN TEMP/S	More than 65°C (149°F)
Selector lever	1st or 2nd position
Driving location uphill	Driving vehicle uphill (Increased engine load will help maintain the driving conditions required for this test.)

8. Check 1st trip DTC.

9. If 1st trip DTC is detected, go to EC-1260, "Diagnosis Procedure".

WITH GST
Follow the procedure “WITH CONSULT-III” above.

Diagnosis Procedure

INFOID:0000000005285786

1. CHECK OIL PRESSURE WARNING LAMP

1. Start engine.
2. Check oil pressure warning lamp and confirm it is not illuminated.

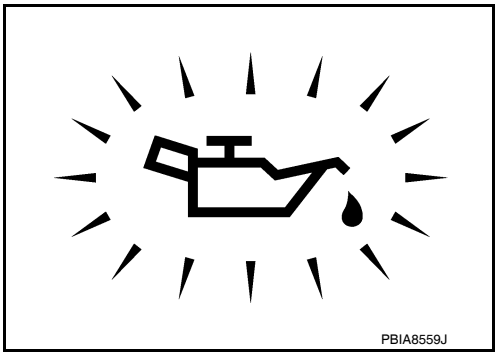

OK or NG

OK >> GO TO 2.
NG >> Go to LU-18, "Inspection".

2. CHECK INTAKE VALVE TIMING CONTROL SOLENOID VALVE

Refer to EC-1261, "Component Inspection".

OK or NG

OK >> GO TO 3.
NG >> Replace intake valve timing control solenoid valve.

3. CHECK CRANKSHAFT POSITION SENSOR (POS)

Refer to EC-1430, "Component Inspection".

OK or NG

OK >> GO TO 4.
NG >> Replace crankshaft position sensor (POS).

4. CHECK CAMSHAFT POSITION SENSOR (PHASE)

Refer to EC-1435, "Component Inspection".

OK or NG

OK >> GO TO 5.
NG >> Replace camshaft position sensor (PHASE).

5. CHECK CAMSHAFT (INTAKE)

Check the following.
- Accumulation of debris to the signal plate of camshaft (1) rear end
- Chipping signal plate of camshaft rear end

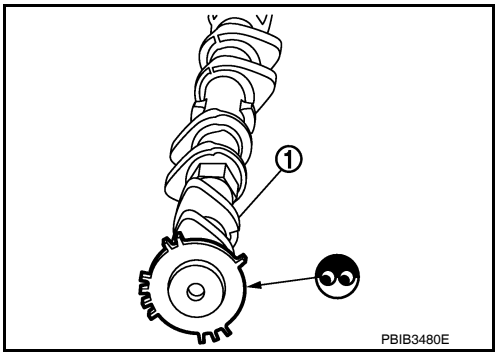

OK or NG

OK >> GO TO 6.
NG >> Remove debris and clean the signal plate of camshaft rear end or replace camshaft.

6. CHECK TIMING CHAIN INSTALLATION

Check service records for any recent repairs that may cause timing chain misaligned.
Are there any service records that may cause timing chain misaligned?

Yes or No

Yes >> Check timing chain installation. Refer to EM-164.
No >> GO TO 7.

7. CHECK LUBRICATION CIRCUIT

Refer to EM-160, "Inspection After Installation".

OK or NG

OK >> GO TO 8.
NG >> Clean lubrication line.

8. CHECK INTERMITTENT INCIDENT

Refer to EC-1245.
For Wiring Diagram, refer to EC-1426, "Wiring Diagram" for CKP sensor (POS) and EC-1432, "Wiring Diagram" for CMP sensor (PHASE).

>> **INSPECTION END**

Component Inspection

INFOID:0000000005285787

INTAKE VALVE TIMING CONTROL SOLENOID VALVE

1. Disconnect intake valve timing control solenoid valve harness connector.
2. Check resistance between intake valve timing control solenoid valve as follows.

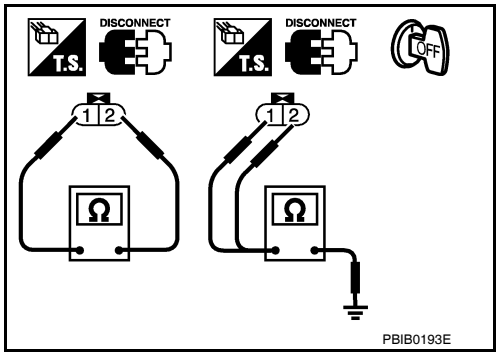

Terminal	Resistance
1 and 2	6.7 - 7.7 Ω [at 20°C (68°F)]
1 or 2 and ground	∞Ω (Continuity should not exist.)

If NG, replace intake valve timing control solenoid valve.
If OK, go to next step.

3. Remove intake valve timing control solenoid valve.
4. Provide 12 V DC between intake valve timing control solenoid valve terminals and then interrupt it. Check that the plunger moves as shown in the figure.
   CAUTION:
   Never apply 12 V DC continuously for 5 seconds or more. Doing so may result in damage to the coil in intake valve timing control solenoid valve.
   If NG, replace intake valve timing control solenoid valve.
   NOTE:
   Always replace O-ring when intake valve timing control solenoid valve is removed.

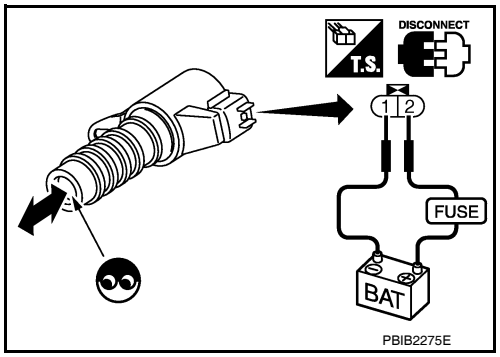

Removal and Installation

INFOID:0000000005285788

INTAKE VALVE TIMING CONTROL SOLENOID VALVE

Refer to EM-153.

DTC P0031, P0032, P0051, P0052 A/F SENSOR 1 HEATER

Description

INFOID:0000000005285789

SYSTEM DESCRIPTION

Sensor	Input Signal to ECM	ECM function	Actuator
Camshaft position sensor (PHASE) Crankshaft position sensor (POS)	Engine speed	Air fuel ratio (A/F) sensor 1 heater control	Air fuel ratio (A/F) sensor 1 heater
Mass air flow sensor	Amount of intake air		

The ECM performs ON/OFF duty control of the A/F sensor 1 heater corresponding to the engine operating condition to keep the temperature of A/F sensor 1 element at the specified range.

CONSULT-III Reference Value in Data Monitor Mode

INFOID:0000000005285790

Specification data are reference values.

Monitor item	Condition	Specification
A/F S1 HTR (B1) A/F S1 HTR (B2)	• Engine: After warming up, idle the engine (More than 140 seconds after starting engine.)	4 - 100%

On Board Diagnosis Logic

INFOID:0000000005285791

DTC No.	Trouble diagnosis name	DTC detecting condition	Possible cause
P0031 0031 (Bank 1)	Air fuel ratio (A/F) sensor 1 heater control circuit low	The current amperage in the air fuel ratio (A/F) sensor 1 heater circuit is out of the normal range. [An excessively low voltage signal is sent to ECM through the air fuel ratio (A/F) sensor 1 heater.]	• Harness or connectors [Air fuel ratio (A/F) sensor 1 heater circuit is open or shorted.] • Air fuel ratio (A/F) sensor 1 heater
P0051 0051 (Bank 2)			
P0032 0032 (Bank 1)	Air fuel ratio (A/F) sensor 1 heater control circuit high	The current amperage in the air fuel ratio (A/F) sensor 1 heater circuit is out of the normal range. [An excessively high voltage signal is sent to ECM through the air fuel ratio (A/F) sensor 1 heater.]	• Harness or connectors [Air fuel ratio (A/F) sensor 1 heater circuit is shorted.] • Air fuel ratio (A/F) sensor 1 heater
P0052 0052 (Bank 2)			

DTC Confirmation Procedure

INFOID:0000000005285792

NOTE:
If DTC Confirmation Procedure has been previously conducted, always turn ignition switch OFF and wait at least 10 seconds before conducting the next test.
TESTING CONDITION:
Before performing the following procedure, confirm that battery voltage is 11 V at idle.

1. Start engine and run it for at least 10 seconds at idle speed.
2. Check 1st trip DTC.
3. If 1st trip DTC is detected, go to EC-1266, "Diagnosis Procedure".

Wiring Diagram

INFOID:0000000005285793

BANK 1

EC-AF1HB1-01

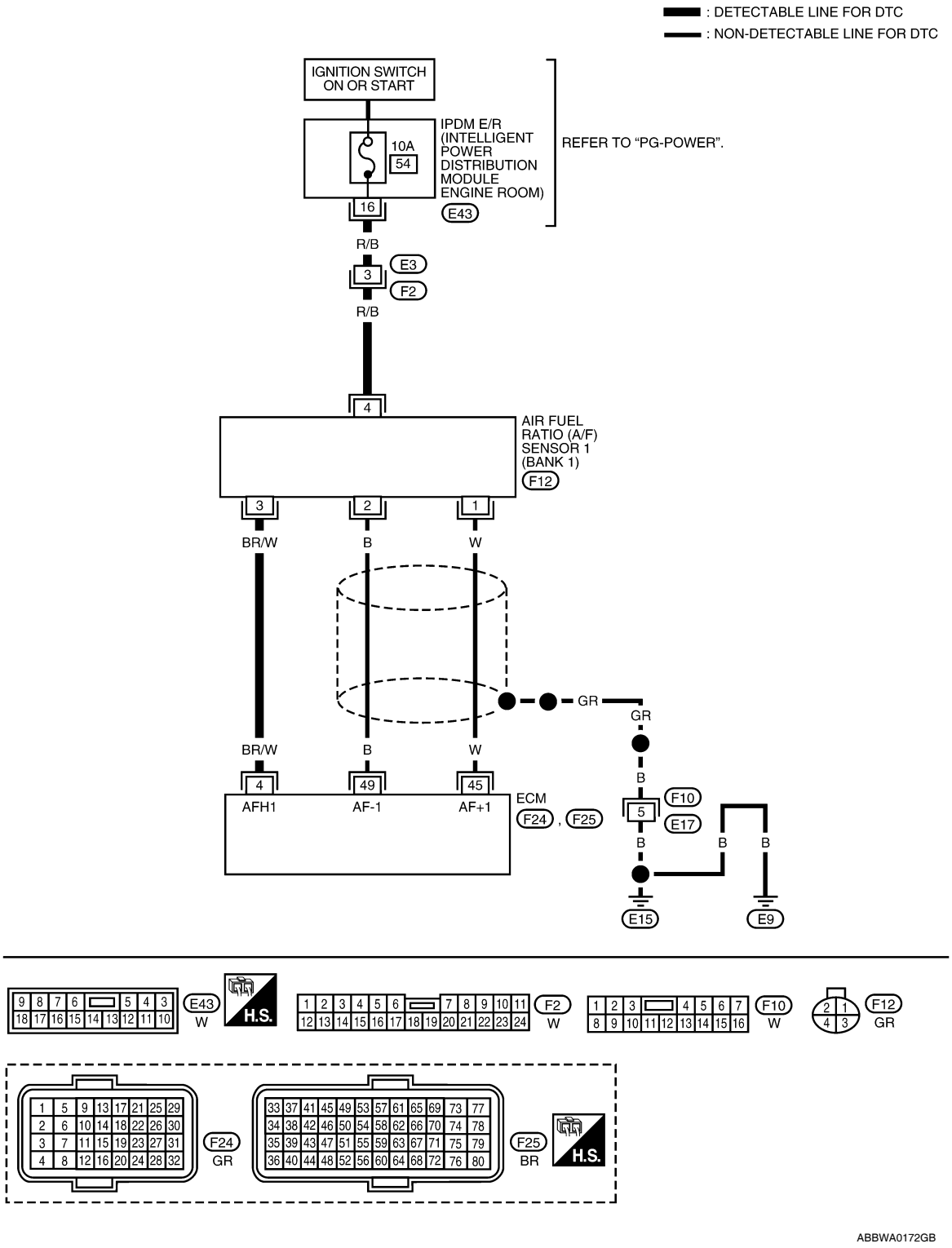

Specification data are reference values and are measured between each terminal and ground.
Pulse signal is measured by CONSULT-III.

CAUTION:

Never use ECM ground terminals when measuring input/output voltage. Doing so may result in damage to the ECM's transistor. Use a ground other than ECM terminals, such as the ground.

TERMINAL NO.	WIRE COLOR	ITEM	CONDITION	DATA (DC Voltage)
4	BR/W	A/F sensor 1 heater (Bank 1)	**[Engine is running]** • **Warm-up condition** • Idle speed (More than 140 seconds after starting engine)	Approximately 2.9 - 8.8 V★ 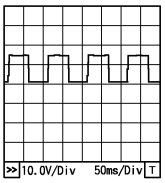 PBIA8148J
45	W	A/F sensor 1 (Bank 1)	**[Engine is running]** • **Warm-up condition** • Engine speed: 2,000 rpm	Approximately 1.8 V Output voltage varies with air fuel ratio.
49	B	A/F sensor 1 (Bank 1)	**[Ignition switch: ON]**	Approximately 2.2 V

★: Average voltage for pulse signal (Actual pulse signal can be confirmed by oscilloscope.)

EC-AF1HB2-01

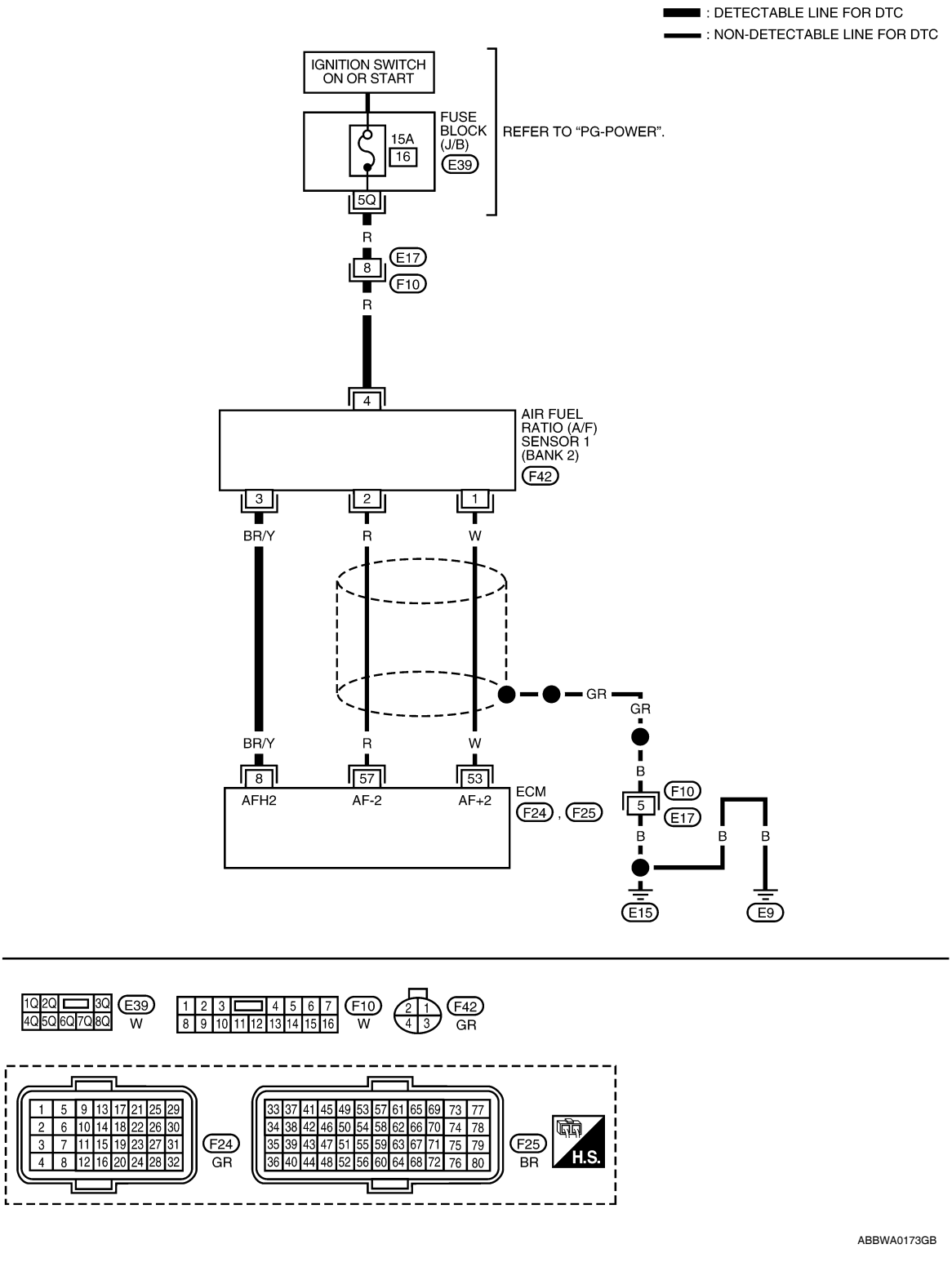

Specification data are reference values and are measured between each terminal and ground.
Pulse signal is measured by CONSULT-III.

CAUTION:

Never use ECM ground terminals when measuring input/output voltage. Doing so may result in damage to the ECM's transistor. Use a ground other than ECM terminals, such as the ground.

TERMINAL NO.	WIRE COLOR	ITEM	CONDITION	DATA (DC Voltage)
8	BR/Y	A/F sensor 1 heater (Bank 2)	**[Engine is running]** • **Warm-up condition** • Idle speed (More than 140 seconds after starting engine)	Approximately 2.9 - 8.8 V★ 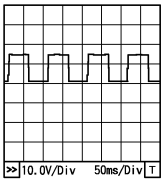 PBIA8148J
53	W	A/F sensor 1 (Bank 2)	**[Engine is running]** • **Warm-up condition** • Engine speed: 2,000 rpm	Approximately 1.8 V Output voltage varies with air fuel ratio.
57	R	A/F sensor 1 (Bank 2)	**[Ignition switch: ON]**	Approximately 2.2 V

★: Average voltage for pulse signal (Actual pulse signal can be confirmed by oscilloscope.)

Diagnosis Procedure

INFOID:0000000005285794

1. CHECK GROUND CONNECTIONS

1. Turn ignition switch OFF.
2. Loosen and retighten ground screws on the body.
   Refer to EC-1251, "Ground Inspection".

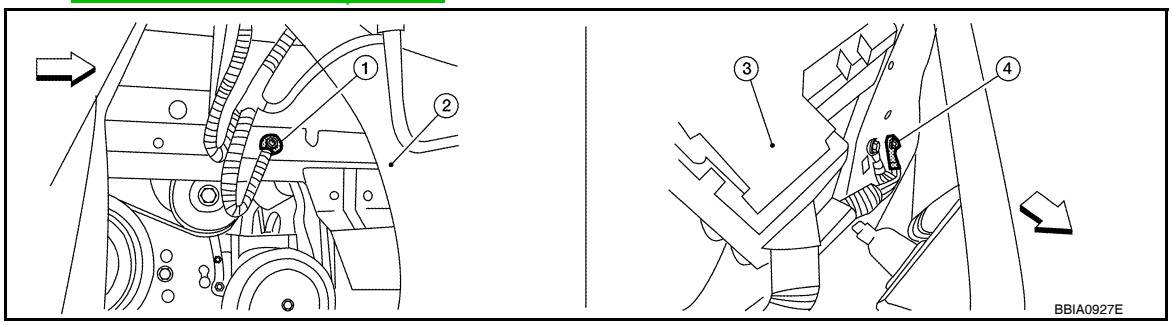

⇦: Vehicle front

1. Body ground E9 (view with front wheel RH and fender protector RH removed.)
2. Washer tank
3. Fuse and fusible link box
4. Body ground E15

OK or NG

OK >> GO TO 2.
NG >> Repair or replace ground connections.

2. CHECK AIR FUEL RATIO (A/F) SENSOR 1 POWER SUPPLY CIRCUIT

1. Disconnect air fuel ratio (A/F) sensor 1 harness connector.
- Air fuel ratio (A/F) sensor 1 (Bank 1) harness connector (1)
- Air fuel ratio (A/F) sensor 1 (Bank 1) (2)
- Air fuel ratio (A/F) sensor 1 (Bank 2) (3)
- Air fuel ratio (A/F) sensor 1 (Bank 2) harness connector (4)
2. Turn ignition switch ON.

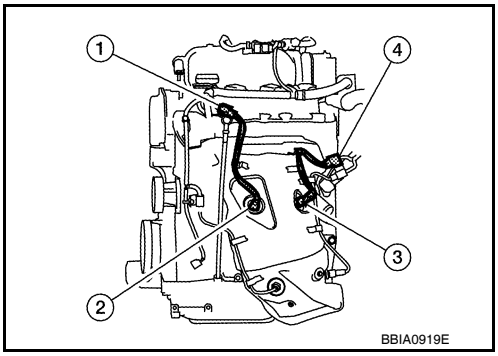

3. Check voltage between A/F sensor 1 terminal 4 and ground with CONSULT-III or tester.

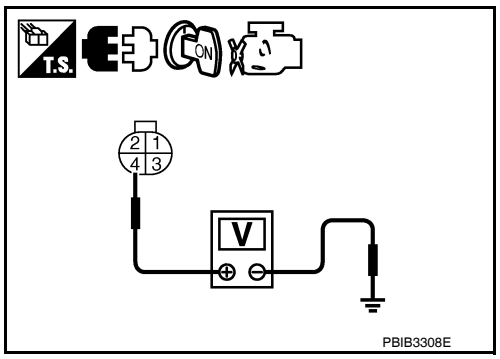

Voltage: Battery voltage

OK or NG

OK >> GO TO 4.
NG >> GO TO 3.

3. DETECT MALFUNCTIONING PART

Check the following.
- Harness connectors E3, F2 (Bank 1)
- Harness connectors E17, F10 (Bank 2)
- Fuse block (J/B) connector E43 (Bank 1)
- Fuse block (J/B) connector E39 (Bank 2)
- 10 A fuse (Bank 1)
- 15 A fuse (Bank 2)
- Harness for open or short between A/F sensor 1 and fuse

>> Repair or replace harness or connectors.

4. CHECK A/F SENSOR 1 HEATER OUTPUT SIGNAL CIRCUIT

1. Turn ignition switch OFF.
2. Disconnect ECM harness connector.
3. Check harness continuity between ECM terminal 4 (Bank 1) or 8 (Bank 2) and A/F sensor 1 terminal 3. Refer to Wiring Diagram.

Continuity should exist.

4. Also check harness for short to ground and short to power.

OK or NG

OK >> GO TO 5.
NG >> Repair open circuit or short to ground or short to power in harness or connectors.

5. CHECK A/F SENSOR 1 HEATER

Refer to EC-1267, "Component Inspection".

OK or NG

OK >> GO TO 6.
NG >> Replace malfunctioning air fuel ratio (A/F) sensor 1.

6. CHECK INTERMITTENT INCIDENT

Perform EC-1245.

>> **INSPECTION END**

Component Inspection

INFOID:0000000005285795

AIR FUEL RATIO (A/F) SENSOR 1 HEATER

1. Check resistance between A/F sensor 1 terminals as follows.

Terminal No.	Resistance
3 and 4	1.8 - 2.44 Ω [at 25°C (77°F)]
3 and 1, 2	∞ Ω (Continuity should not exist)
4 and 1, 2	

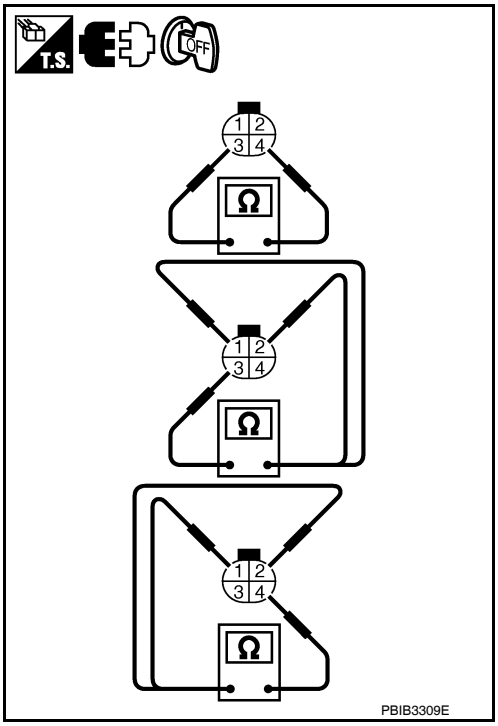

2. If NG, replace air fuel ratio (A/F) sensor 1.

CAUTION:

- **Discard any A/F sensor which has been dropped from a height of more than 0.5 m (19.7 in) onto a hard surface such as a concrete floor; use a new one.**
- **Before installing new A/F sensor, clean exhaust system threads using heated oxygen sensor thread cleaner [commercial service tool (J-43897-18 or J-43897-12)] and approved anti-seize lubricant (commercial service tool).**

Removal and Installation

INFOID:0000000005285796

AIR FUEL RATIO SENSOR HEATER

Refer to EM-140.

DTC P0037, P0038, P0057, P0058 HO2S2 HEATER

Description

INFOID:0000000005285797

SYSTEM DESCRIPTION

Sensor	Input Signal to ECM	ECM Function	Actuator
Camshaft position sensor (PHASE)	Engine speed	Heated oxygen sensor 2 heater control	Heated oxygen sensor 2 heater
Crankshaft position sensor (POS)			
Engine coolant temperature sensor	Engine coolant temperature		
Mass air flow sensor	Amount of intake air		

The ECM performs ON/OFF control of the heated oxygen sensor 2 heater corresponding to the engine speed, amount of intake air and engine coolant temperature.

OPERATION

Engine speed	Heated oxygen sensor 2 heater
Above 3,600 rpm	OFF
• Below 3,600 rpm after the following conditions are met. - Engine: After warming up - Keeping the engine speed between 3,500 and 4,000 rpm for 1 minute and at idle for 1 minute under no load	ON

CONSULT-III Reference Value in Data Monitor Mode

INFOID:0000000005285798

Specification data are reference values.

Monitor item	Condition	Specification
HO2S2 HTR (B1) HO2S2 HTR (B2)	• Engine speed: Below 3,600 rpm after the following conditions are met - Engine: After warming up - Keeping the engine speed between 3,500 and 4,000 rpm for 1 minute and at idle for 1 minute under no load	ON
	• Engine speed: Above 3,600 rpm	OFF

On Board Diagnosis Logic

INFOID:0000000005285799

DTC No.	Trouble diagnosis name	DTC detecting condition	Possible cause
P0037 0037 (Bank 1)	Heated oxygen sensor 2 heater control circuit low	The current amperage in the heated oxygen sensor 2 heater circuit is out of the normal range. (An excessively low voltage signal is sent to ECM through the heated oxygen sensor 2 heater.)	• Harness or connectors (Heated oxygen sensor 2 heater circuit is open or shorted.) • Heated oxygen sensor 2 heater
P0057 0057 (Bank 2)			
P0038 0038 (Bank 1)	Heated oxygen sensor 2 heater control circuit high	The current amperage in the heated oxygen sensor 2 heater circuit is out of the normal range. (An excessively high voltage signal is sent to ECM through the heated oxygen sensor 2 heater.)	• Harness or connectors (Heated oxygen sensor 2 heater circuit is shorted.) • Heated oxygen sensor 2 heater
P0058 0058 (Bank 2)			

DTC Confirmation Procedure

INFOID:0000000005285800

NOTE:
If DTC Confirmation Procedure has been previously conducted, always turn ignition switch OFF and wait at least 10 seconds before conducting the next test.

TESTING CONDITION:
Before performing the following procedure, confirm that battery voltage is between 11 V at idle.

WITH CONSULT-III

1. Turn ignition switch ON and select “DATA MONITOR” mode with CONSULT-III.
2. Start engine and warm it up to the normal operating temperature.
3. Turn ignition switch OFF and wait at least 10 seconds.
4. Start engine and keep the engine speed between 3,500 and 4,000 rpm for at least 1 minute under no load.
5. Let engine idle for 1 minute.
6. Check 1st trip DTC.
7. If 1st trip DTC is detected, go to EC-1274, "Diagnosis Procedure".

WITH GST

Follow the procedure “WITH CONSULT-III” above.

Wiring Diagram

INFOID:0000000005285801

BANK 1

EC-O2H2B1-01

: DETECTABLE LINE FOR DTC
: NON-DETECTABLE LINE FOR DTC

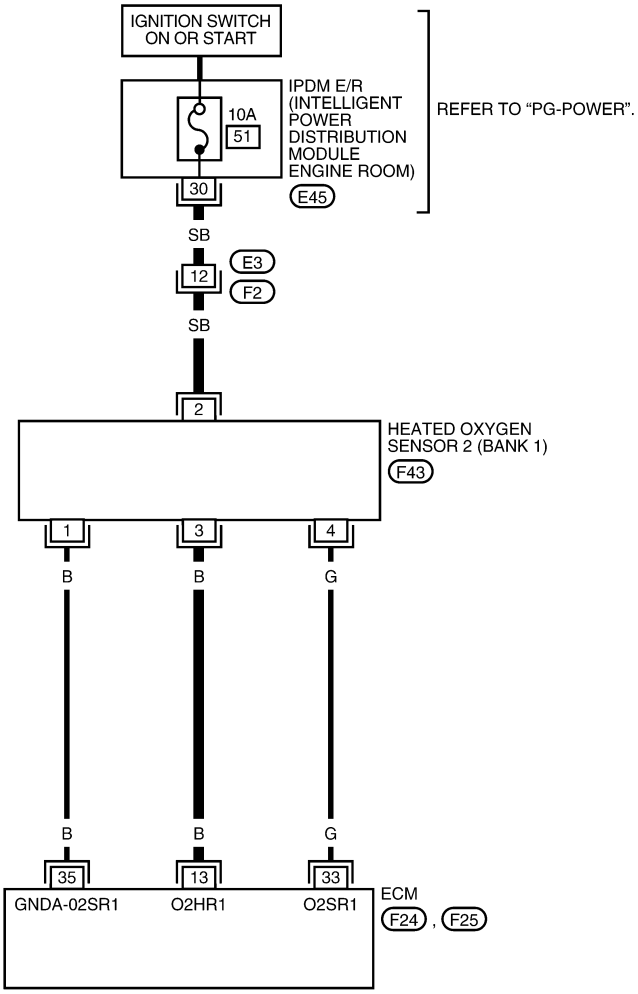

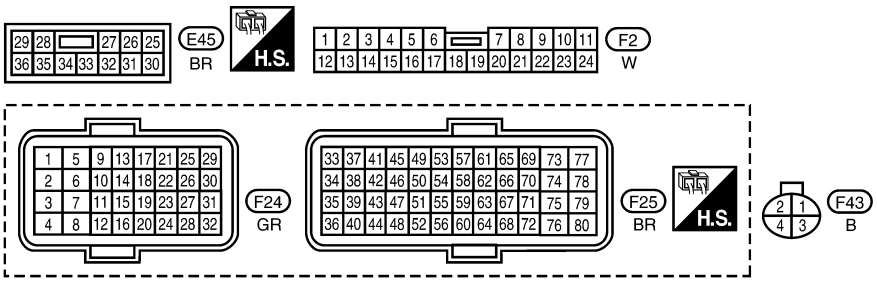

AABWA0256GB

Specification data are reference values and are measured between each terminal and ground.
Pulse signal is measured by CONSULT-III.

CAUTION:

Never use ECM ground terminals when measuring input/output voltage. Doing so may result in damage to the ECM's transistor. Use a ground other than ECM terminals, such as the ground.

TERMINAL NO.	WIRE COLOR	ITEM	CONDITION	DATA (DC Voltage)
13	B	Heated oxygen sensor 2 heater (Bank 1)	**[Engine is running]** • Engine speed: Below 3,600 rpm after the following conditions are met. - Engine: After warming up - Keeping the engine speed between 3,500 and 4,000 rpm for 1 minute and at idle for 1 minute under no load.	Approximately 10 V★ 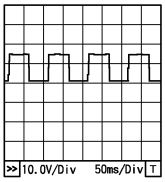 PBIA8148J
			[Ignition switch: ON] • Engine stopped **[Engine is running]** • Engine speed: Above 3,600 rpm.	BATTERY VOLTAGE (11 - 14 V)
33	G	Heated oxygen sensor 2 (Bank 1)	**[Engine is running]** • Revving engine from idle to 3,000 rpm quickly after the following conditions are met. - Engine: After warming up - Keeping the engine speed between 3,500 and 4,000 rpm for 1 minute and at idle for 1 minute under no load.	0 - Approximately 1.0 V
35	B	Sensor ground (Heated oxygen sensor 2)	**[Engine is running]** • **Warm-up condition** • Idle speed	Approximately 0 V

★: Average voltage for pulse signal (Actual pulse signal can be confirmed by oscilloscope.)

BANK 2

EC-O2H2B2-01

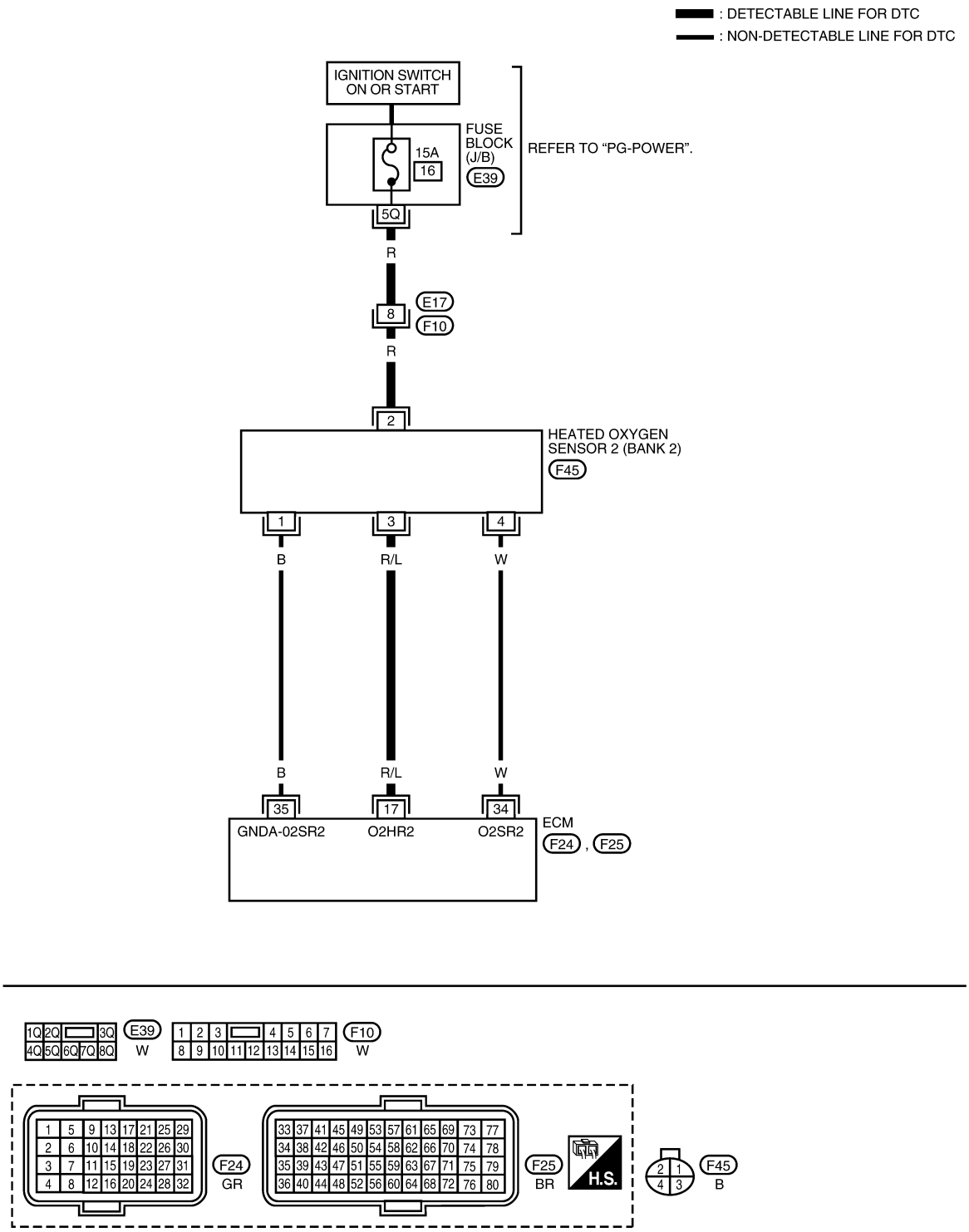

Specification data are reference values and are measured between each terminal and ground.
Pulse signal is measured by CONSULT-III.

CAUTION:

Never use ECM ground terminals when measuring input/output voltage. Doing so may result in damage to the ECM's transistor. Use a ground other than ECM terminals, such as the ground.

TERMINAL NO.	WIRE COLOR	ITEM	CONDITION	DATA (DC Voltage)
17	R/L	Heated oxygen sensor 2 heater (Bank 2)	**[Engine is running]** • Engine speed: Below 3,600 rpm after the following conditions are met. - Engine: After warming up - Keeping the engine speed between 3,500 and 4,000 rpm for 1 minute and at idle for 1 minute under no load.	Approximately 10 V★ 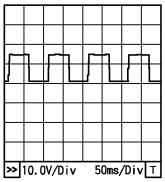 PBIA8148J
			[Ignition switch: ON] • Engine stopped **[Engine is running]** • Engine speed: Above 3,600 rpm.	BATTERY VOLTAGE (11 - 14 V)
34	W	Heated oxygen sensor 2 (Bank 2)	**[Engine is running]** • Revving engine from idle to 3,000 rpm quickly after the following conditions are met. - Engine: After warming up - Keeping the engine speed between 3,500 and 4,000 rpm for 1 minute and at idle for 1 minute under no load.	0 - Approximately 1.0 V
35	B	Sensor ground (Heated oxygen sensor 2)	**[Engine is running]** • **Warm-up condition** • Idle speed	Approximately 0 V

★: Average voltage for pulse signal (Actual pulse signal can be confirmed by oscilloscope.)

Diagnosis Procedure

INFOID:0000000005285802

1. CHECK GROUND CONNECTIONS

1. Turn ignition switch OFF.
2. Loosen and retighten ground screw on the body.
   Refer to EC-1251, "Ground Inspection".

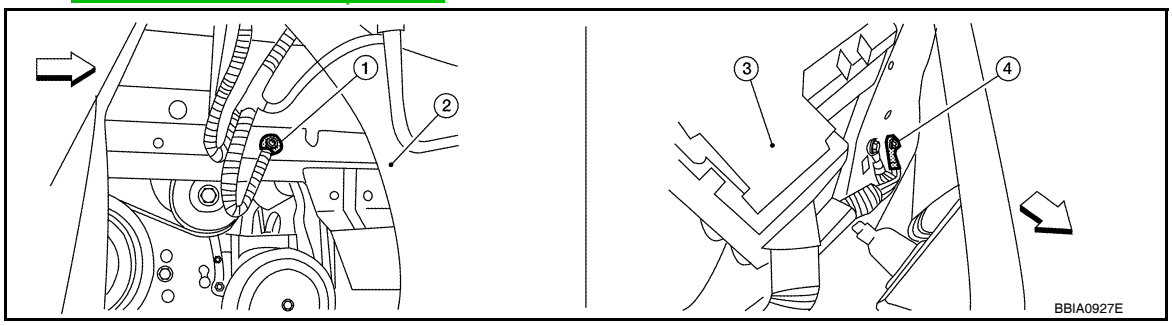

⇦: Vehicle front

1. Body ground E9 (view with front wheel RH and fender protector RH removed.)
2. Washer tank
3. Fuse and fusible link box
4. Body ground E15

OK or NG

OK >> GO TO 2.
NG >> Repair or replace ground connections.

2. CHECK HO2S2 POWER SUPPLY CIRCUIT

1. Disconnect heated oxygen sensor 2 harness connector.
- Heated oxygen sensor 2 (Bank 1) harness connector (1)
- Heated oxygen sensor 2 (Bank 1) (2)
- Heated oxygen sensor 2 (Bank 2) (3)
- Heated oxygen sensor 2 (Bank 2) harness connector (4)
2. Turn ignition switch ON.

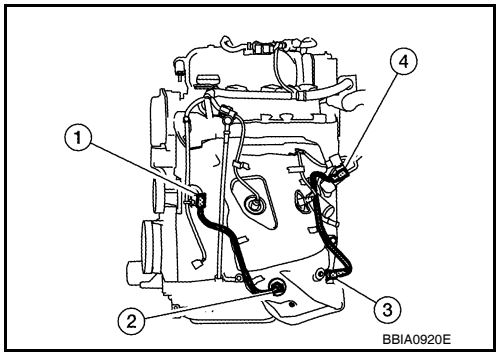

3. Check voltage between HO2S2 terminal 2 and ground with CONSULT-III or tester.

Voltage: Battery voltage

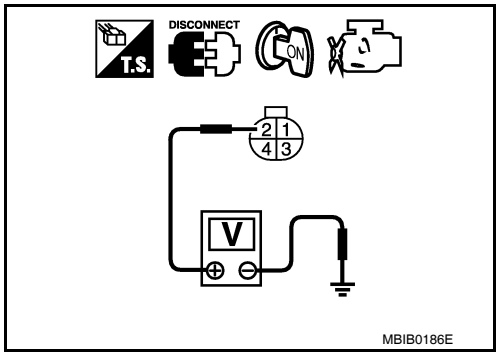

OK or NG

OK >> GO TO 4.
NG >> GO TO 3.

3. DETECT MALFUNCTIONING PART

Check the following.
- Harness connector E3, F2 (Bank 1)
- Harness connector E17, F10 (Bank 2)
- Fuse block (J/B) connector E45 (Bank 1)
- Fuse block (J/B) connector E39 (Bank 2)
- 10 A fuse (Bank 1)
- 15 A fuse (Bank 2)
- Harness for open or short between heated oxygen sensor 2 and ECM

>> Repair open circuit or short to ground or short to power in harness or connectors.

4. CHECK HO2S2 OUTPUT SIGNAL CIRCUIT FOR OPEN AND SHORT

1. Turn ignition switch OFF.
2. Disconnect ECM harness connector.
3. Check harness continuity between ECM terminal 13 (Bank 1) or 17 (Bank 2) and HO2S2 terminal 3. Refer to Wiring Diagram.

Continuity should exist.

4. Also check harness for short to ground and short to power.

OK or NG

OK >> GO TO 5.
NG >> Repair open circuit or short to ground or short to power in harness or connectors.

5. CHECK HEATED OXYGEN SENSOR 2 HEATER

Refer to EC-1276, "Component Inspection".

OK or NG

OK >> GO TO 6.
NG >> Replace malfunctioning heated oxygen sensor 2.

6. CHECK INTERMITTENT INCIDENT

Refer to EC-1245.

>> **INSPECTION END**

Component Inspection

INFOID:0000000005285803

HEATED OXYGEN SENSOR 2 HEATER

1. Check resistance between HO2S2 terminals as follows.

Terminal No.	Resistance
2 and 3	3.4 - 4.4 Ω [at 25°C (77°F)]
1 and 2, 3, 4	∞ Ω (Continuity should not exist)
4 and 1, 2, 3	

2. If NG, replace heated oxygen sensor 2.

CAUTION:

- **Discard any heated oxygen sensor which has been dropped from a height of more than 0.5 m (19.7 in) onto a hard surface such as a concrete floor; use a new one.**
- **Before installing new oxygen sensor, clean exhaust system threads using oxygen sensor thread cleaner [commercial service tool (J-43897-18 or J-43897-12)] and approved anti-seize lubricant (commercial service tool).**

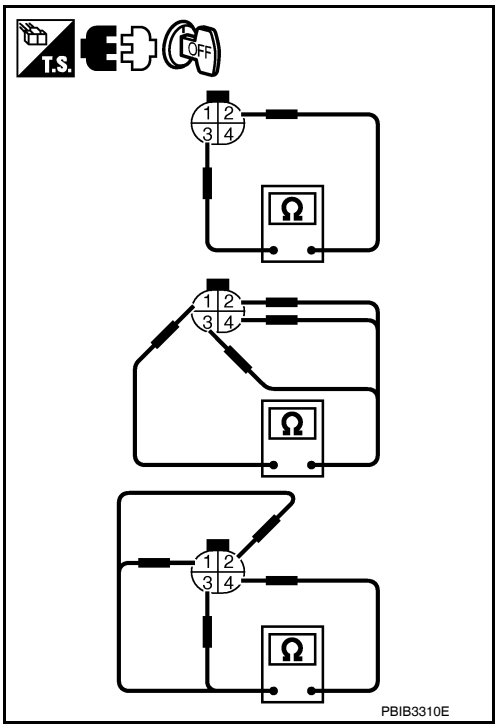

Removal and Installation

INFOID:0000000005285804

HEATED OXYGEN SENSOR 2

Refer to EM-140.

DTC P0075 IVT CONTROL SOLENOID VALVE

Component Description

INFOID:0000000005285805

Intake valve timing control solenoid valve is activated by ON/OFF pulse duty (ratio) signals from the ECM.
The intake valve timing control solenoid valve changes the oil amount and direction of flow through intake valve timing control unit or stops oil flow.
The longer pulse width advances valve angle.
The shorter pulse width retards valve angle.
When ON and OFF pulse widths become equal, the solenoid valve stops oil pressure flow to fix the intake valve angle at the control position.

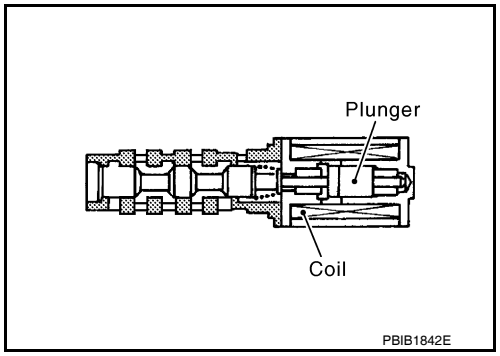

CONSULT-III Reference Value in Data Monitor Mode

INFOID:0000000005285806

Specification data are reference values.

Monitor item	Condition		Specification
INT/V SOL (B1)	• Engine: After warming up • Selector lever: P or N (CVT), Neutral (M/T) • Air conditioner switch: OFF • No load	Idle	0%
		2,000 rpm	Approx. 0% - 60%

On Board Diagnosis Logic

INFOID:0000000005285807

DTC No.	Trouble diagnosis name	DTC detecting condition	Possible cause
P0075 0075	Intake valve timing control solenoid valve circuit	An improper voltage is sent to the ECM through intake valve timing control solenoid valve.	• Harness or connectors (Intake valve timing control solenoid valve circuit is open or shorted.) • Intake valve timing control solenoid valve

DTC Confirmation Procedure

INFOID:0000000005285808

NOTE:
If DTC Confirmation Procedure has been previously conducted, always turn ignition switch OFF and wait at least 10 seconds before conducting the next test.

1. Start engine and let it idle for 5 seconds.
2. Check 1st trip DTC.
3. If 1st trip DTC is detected, go to EC-1279, "Diagnosis Procedure".

Wiring Diagram

INFOID:0000000005285809

EC-IVC-01

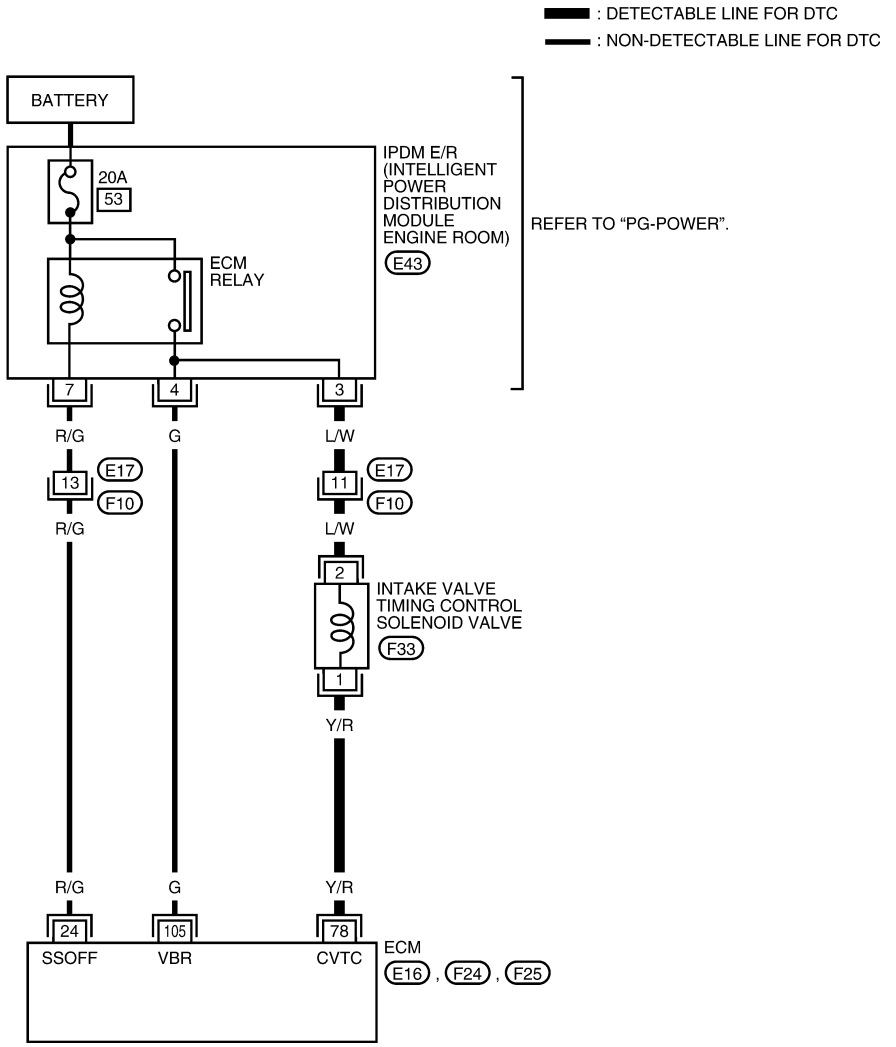

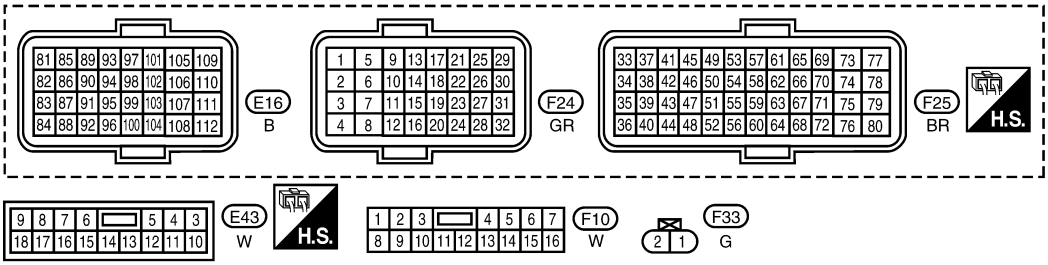

AABWA0257GB

Specification data are reference values and are measured between each terminal and ground.
Pulse signal is measured by CONSULT-III.

CAUTION:

Never use ECM ground terminals when measuring input/output voltage. Doing so may result in damage to the ECM's transistor. Use a ground other than ECM terminals, such as the ground.

TERMINAL NO.	WIRE COLOR	ITEM	CONDITION	DATA (DC Voltage)
24	R/G	ECM relay (Self shut-off)	**[Engine is running]** **[Ignition switch: OFF]** • For a few seconds after turning ignition switch OFF	0 - 1.0 V
			[Ignition switch: OFF] • More than a few seconds after turning ignition switch OFF	BATTERY VOLTAGE (11 - 14 V)
78	Y/R	Intake valve timing control solenoid valve	**[Engine is running]** • **Warm-up condition** • Idle speed	BATTERY VOLTAGE (11 - 14 V)
			[Engine is running] • **Warm-up condition** • When revving engine up to 2,000 rpm quickly	7 - 10 V★ 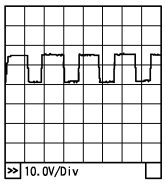 PBIA4937J
105	G	Power supply for ECM	**[Ignition switch: ON]**	BATTERY VOLTAGE (11 - 14 V)

★: Average voltage for pulse signal (Actual pulse signal can be confirmed by oscilloscope.)

Diagnosis Procedure

INFOID:0000000005285810

1. CHECK INTAKE VALVE TIMING CONTROL SOLENOID VALVE POWER SUPPLY CIRCUIT

1. Turn ignition switch OFF.
2. Disconnect intake valve timing control solenoid valve (1) harness connector.
   ⇦: Vehicle front
3. Turn ignition switch ON.

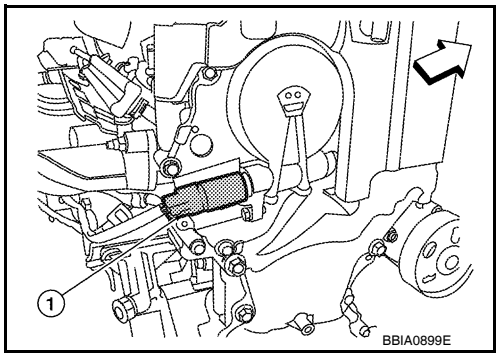

4. Check voltage between intake valve timing control solenoid valve terminal 2 and ground with CONSULT-III or tester.

Voltage: Battery voltage

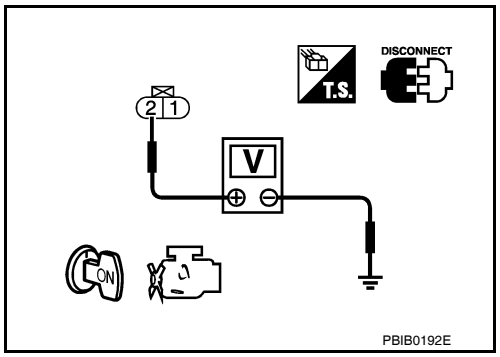

OK or NG

OK >> GO TO 3.
NG >> GO TO 2.

2. DETECT MALFUNCTION PART

Check the following.

- Harness connectors E17, F10
- Harness for open or short between intake valve timing control solenoid valve and IPDM E/R

>> Repair or replace harness or connectors.

3. CHECK INTAKE VALVE TIMING CONTROL SOLENOID VALVE OUTPUT SIGNAL CIRCUIT FOR OPEN AND SHORT

1. Turn ignition switch OFF.
2. Disconnect ECM harness connector.
3. Check harness continuity between ECM terminal 78 and intake valve timing control solenoid valve terminal 1. Refer to Wiring Diagram.

Continuity should exist.

4. Also check harness for short to ground and short to power.

OK or NG

OK >> GO TO 4.
NG >> Repair open circuit or short to ground or short to power in harness or connectors.

4. CHECK INTAKE VALVE TIMING CONTROL SOLENOID VALVE

Refer to EC-1280, "Component Inspection".

OK or NG

OK >> GO TO 5.
NG >> Replace intake valve timing control solenoid valve.

5. CHECK INTERMITTENT INCIDENT

Refer to EC-1245.

>> **INSPECTION END**

Component Inspection

INFOID:0000000005285811

INTAKE VALVE TIMING CONTROL SOLENOID VALVE

1. Disconnect intake valve timing control solenoid valve harness connector.
2. Check resistance between intake valve timing control solenoid valve as follows.

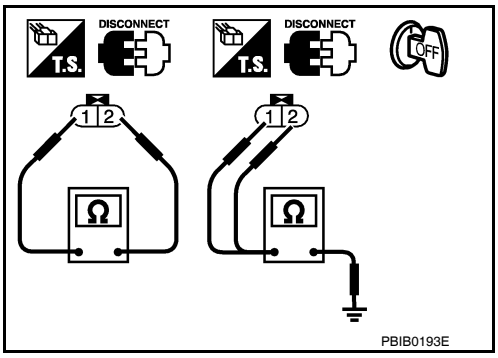

Terminal	Resistance
1 and 2	6.7 - 7.7 Ω [at 20°C (68°F)]
1 or 2 and ground	∞ Ω (Continuity should not exist.)

If NG, replace intake valve timing control solenoid valve.
If OK, go to next step.

3. Remove intake valve timing control solenoid valve.
4. Provide 12 V DC between intake valve timing control solenoid valve terminals and then interrupt it. Check that the plunger moves as shown in the figure.

CAUTION:
Never apply 12 V DC continuously for 5 seconds or more. Doing so may result in damage to the coil in intake valve timing control solenoid valve.
If NG, replace intake valve timing control solenoid valve.
NOTE:
Always replace O-ring when intake valve timing control solenoid valve is removed.

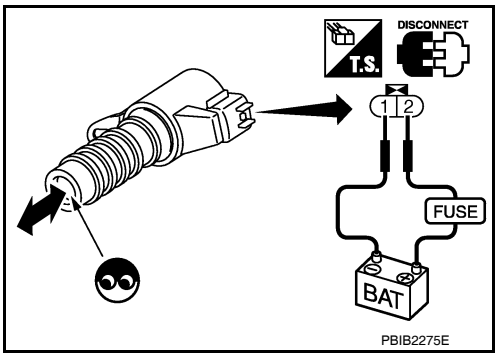

Removal and Installation

INFOID:0000000005285812

INTAKE VALVE TIMING CONTROL SOLENOID VALVE

Refer to EM-164.

DTC P0101 MAF SENSOR

Component Description

INFOID:0000000005285813

The mass air flow sensor (1) is placed in the stream of intake air. It measures the intake flow rate by measuring a part of the entire intake flow. The mass air flow sensor controls the temperature of the hot wire to a certain amount. The heat generated by the hot wire is reduced as the intake air flows around it. The greater air flow, the greater the heat loss.
Therefore, the electric current supplied to hot wire is changed to maintain the temperature of the hot wire as air flow increases. The ECM detects the air flow by means of this current change.

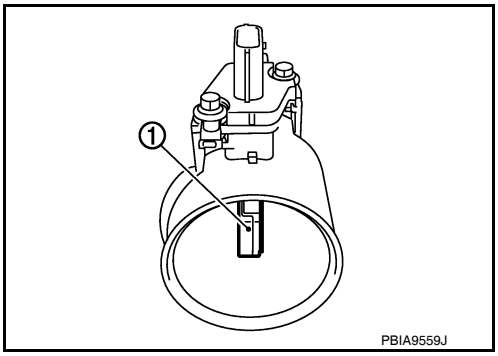

CONSULT-III Reference Value in Data Monitor Mode

INFOID:0000000005285814

Specification data are reference values.

Monitor item	Condition		Specification
MAS A/F SE-B1	See EC-1237.		
CAL/LD VALUE	• Engine: After warming up • Selector lever: P or N (CVT), Neutral (M/T) • Air conditioner switch: OFF • No load	Idle	10% - 35%
		2,500 rpm	10% - 35%
MASS AIRFLOW	• Engine: After warming up • Selector lever: P or N (CVT), Neutral (M/T) • Air conditioner switch: OFF • No load	Idle	1.0 - 4.0 g·m/s
		2,500 rpm	4.0 - 10.0 g·m/s

On Board Diagnosis Logic

INFOID:0000000005285815

DTC No.	Trouble diagnosis name	DTC detecting condition		Possible cause
P0101 0101	Mass air flow sensor circuit range/performance	A)	A high voltage from the sensor is sent to ECM under light load driving condition.	• Harness or connectors (Mass air flow sensor circuit is open or shorted.) • Mass air flow sensor • EVAP control system pressure sensor • Intake air temperature sensor
		B)	A low voltage from the sensor is sent to ECM under heavy load driving condition.	• Harness or connectors (Mass air flow sensor circuit is open or shorted.) • Intake air leaks • Mass air flow sensor • EVAP control system pressure sensor • Intake air temperature sensor

DTC Confirmation Procedure

INFOID:0000000005285816

Perform PROCEDURE FOR MALFUNCTION A first.
If the DTC cannot be confirmed, perform PROCEDURE FOR MALFUNCTION B.
NOTE:
If DTC Confirmation Procedure has been previously conducted, always turn ignition switch OFF and wait at least 10 seconds before conducting the next test.

PROCEDURE FOR MALFUNCTION A

NOTE:

If engine will not start or stops soon, wait at least 10 seconds with engine stopped (Ignition switch ON) instead of running engine at idle speed.

1. Start engine and warm it up to normal operating temperature.
2. Run engine for at least 10 seconds at idle speed.
3. Check 1st trip DTC.
4. If 1st trip DTC is detected, go to EC-1285, "Diagnosis Procedure".

PROCEDURE FOR MALFUNCTION B

CAUTION:
Always drive vehicle at a safe speed.

With CONSULT-III

1. Turn ignition switch ON.
2. Start engine and warm it up to normal operating temperature.
   If engine cannot be started, go to EC-1285, "Diagnosis Procedure".
3. Select “DATA MONITOR” mode with CONSULT-III.
4. Check the voltage of “MAS A/F SE-B1” with “DATA MONITOR”.
5. Increases engine speed to approximately 4,000 rpm.
6. Monitor the linear voltage rise in response to engine speed increases.
   If NG, go to EC-1285, "Diagnosis Procedure".
   If OK, go to following step.
7. Maintain the following conditions for at least 10 consecutive seconds.

ENG SPEED	More than 2,000 rpm
TP SEN 1-B1	More than 1.5 V
TP SEN 2-B1	More than 1.5 V
Selector lever	Suitable position
Driving location	Driving vehicle uphill (Increased engine load) will help maintain the driving conditions required for this test.

8. Check 1st trip DTC.
9. If 1st trip DTC is detected, go to EC-1285, "Diagnosis Procedure".

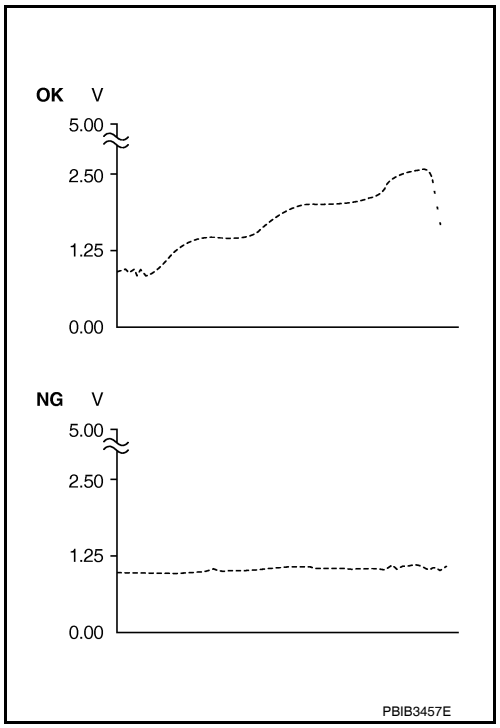

Overall Function Check

INFOID:0000000005285817

PROCEDURE FOR MALFUNCTION B

Use this procedure to check the overall function of the mass air flow sensor circuit. During this check, a 1st DTC might not be confirmed.

With GST

1. Start engine and warm it up to normal operating temperature.
2. Select Service $01 with GST.
3. Check the mass air flow sensor signal with Service $01.
4. Check for linear mass air flow sensor signal value rise in response to increases to approximately 4,000 rpm in engine speed.
5. If NG, go to EC-1285, "Diagnosis Procedure".

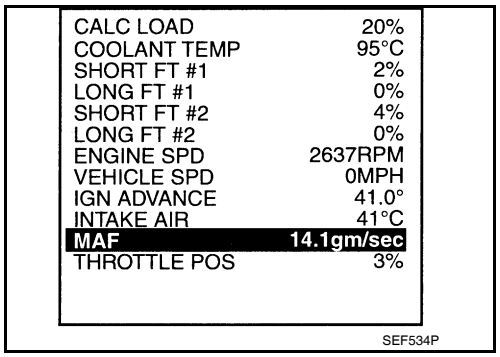

Wiring Diagram

INFOID:0000000005285818

EC-MAFS-01

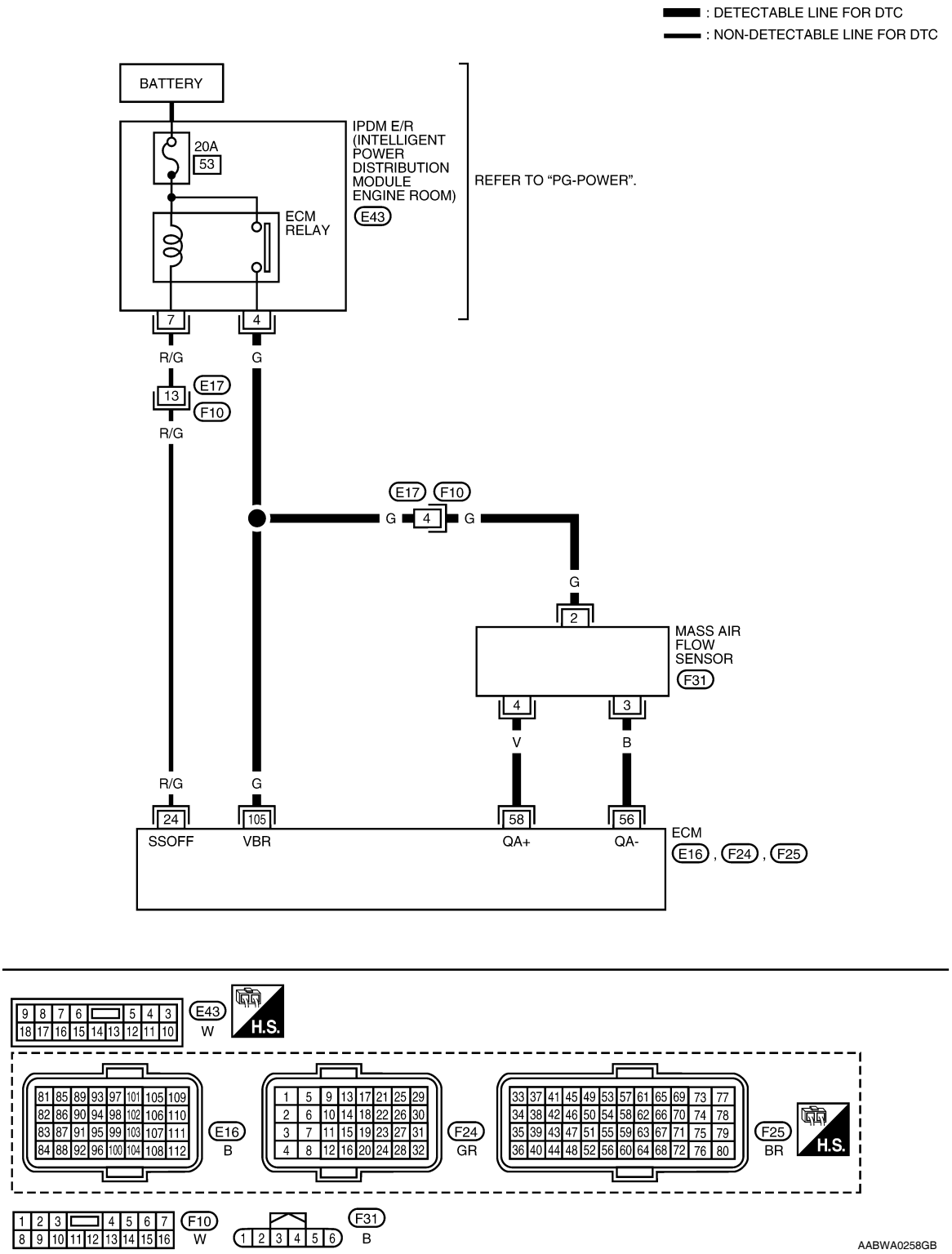

Specification data are reference values and are measured between each terminal and ground.

CAUTION:

Never use ECM ground terminals when measuring input/output voltage. Doing so may result in damage to the ECM's transistor. Use a ground other than ECM terminals, such as the ground.

TER-MI-NAL NO.	WIRE COLOR	ITEM	CONDITION	DATA (DC Voltage)
24	R/G	ECM relay (Self shut-off)	**[Engine is running]** **[Ignition switch: OFF]** • For a few seconds after turning ignition switch OFF	0 - 1.0 V
			[Ignition switch: OFF] • More than a few seconds after turning ignition switch OFF	BATTERY VOLTAGE (11 - 14 V)
56	B	Sensor ground	**[Engine is running]** • **Warm-up condition** • Idle speed	Approximately 0 V
58	V	Mass air flow sensor	**[Engine is running]** • **Warm-up condition** • Idle speed	0.9 - 1.1 V
			[Engine is running] • **Warm-up condition** • Engine speed: 2,500 rpm	1.4 - 1.7 V
105	G	Power supply for ECM	**[Ignition switch: ON]**	BATTERY VOLTAGE (11 - 14 V)

Diagnosis Procedure

INFOID:0000000005285819

1. INSPECTION START

Which malfunction (A or B) is duplicated?

A or B

A >> GO TO 3.
B >> GO TO 2.

2. CHECK INTAKE AIR LEAK

Check the following for connections.
- Air duct
- Vacuum hoses
- Intake air passage between air duct and intake manifold

OK or NG

OK >> GO TO 3.
NG >> Reconnect the parts.

3. CHECK GROUND CONNECTIONS

1. Turn ignition switch OFF.
2. Loosen and retighten ground screw on the body.
   Refer to EC-1251, "Ground Inspection".

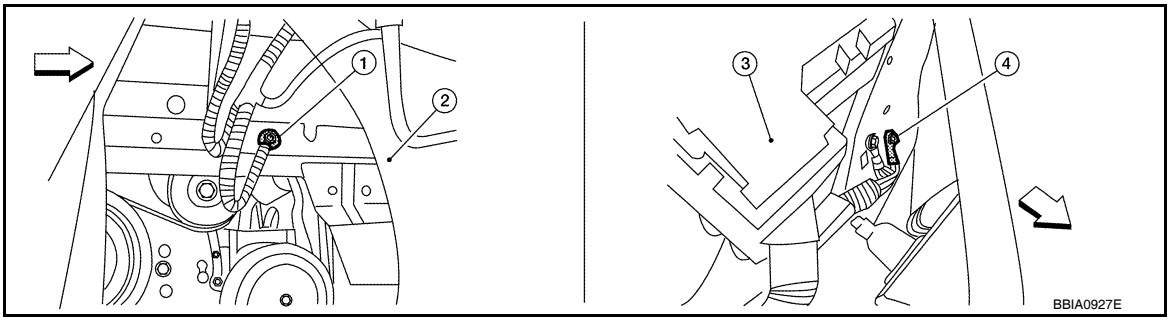

⇦: Vehicle front

1. Body ground E9 (view with front wheel RH and fender protector RH removed.)
2. Washer tank
3. Fuse and fusible link box
4. Body ground E15

OK or NG

OK >> GO TO 4.
NG >> Repair or replace ground connections.

4. CHECK MAF SENSOR POWER SUPPLY CIRCUIT

1. Disconnect mass air flow (MAF) sensor (1) harness connector.
- ⇦: Vehicle front
2. Turn ignition switch ON.

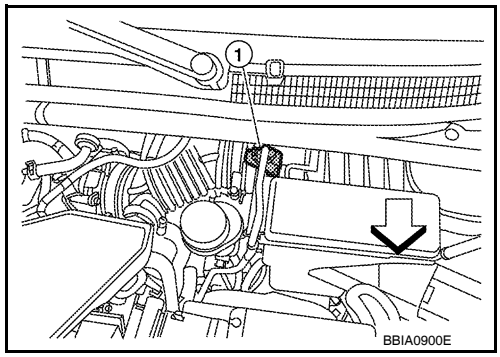

3. Check voltage between MAF sensor terminal 2 and ground with CONSULT-III or tester.

Voltage: Battery voltage

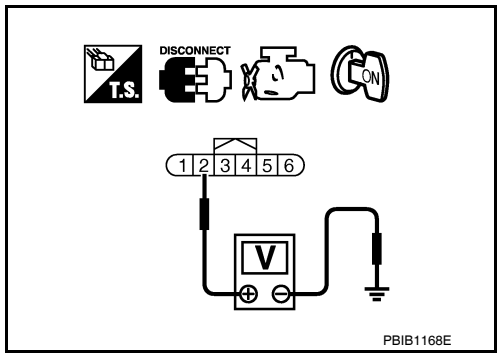

OK or NG

OK >> GO TO 6.
NG >> GO TO 5.

5. DETECT MALFUNCTIONING PART

Check the following.
- Harness connectors E17, F10
- Harness for open or short between mass air flow sensor and IPDM E/R
- Harness for open or short between mass air flow sensor and ECM

>> Repair open circuit or short to ground or short to power in harness or connectors.

6. CHECK MAF SENSOR GROUND CIRCUIT FOR OPEN AND SHORT

1. Turn ignition switch OFF.
2. Disconnect ECM harness connector.
3. Check harness continuity between MAF sensor terminal 3 and ECM terminal 56. Refer to Wiring Diagram.

Continuity should exist.

4. Also check harness for short to ground and short to power.

OK or NG

OK >> GO TO 7.
NG >> Repair open circuit or short to ground or short to power in harness or connectors.

7. CHECK MAF SENSOR INPUT SIGNAL CIRCUIT FOR OPEN AND SHORT

1. Check harness continuity between MAF sensor terminal 4 and ECM terminal 58.

Refer to Wiring Diagram.

Continuity should exist.

2. Also check harness for short to ground and short to power.

OK or NG

OK >> GO TO 8.
NG >> Repair open circuit or short to ground or short or short to power in harness or connectors.

8. CHECK INTAKE AIR TEMPERATURE SENSOR

Refer to EC-1317, "Component Inspection".

OK or NG

OK >> GO TO 9.
NG >> Replace mas air flow sensor (with intake air temperature sensor).

9. CHECK EVAP CONTROL SYSTEM PRESSURE SENSOR

Refer to EC-1481, "Component Inspection".

OK or NG

OK >> GO TO 10.
NG >> Replace EVAP control system pressure sensor.

10. CHECK MASS AIR FLOW SENSOR

Refer to EC-1287, "Component Inspection".

OK or NG

OK >> GO TO 11.
NG >> Replace mass air flow sensor.

11. CHECK INTERMITTENT INCIDENT

Perform EC-1245.

>> **INSPECTION END**

Component Inspection

INFOID:0000000005285820

MASS AIR FLOW SENSOR

With CONSULT-III

1. Reconnect all harness connectors disconnected.
2. Start engine and warm it up to normal operating temperature.
3. Connect CONSULT-III and select “DATA MONITOR” mode.
4. Select “MAS A/F SE-B1” and check indication under the following conditions.

Condition	MAS A/F SE-B1 (V)
Ignition switch ON (Engine stopped.)	Approx 0.4
Idle (Engine is warmed-up to normal operating temperature.)	0.9 - 1.1
2,500 rpm (Engine is warmed-up to normal operating temperature.)	1.4 - 1.7
Idle to approx. 4,000 rpm	0.9 - 1.1 to 2.4*

*: Check for linear voltage rise in response to engine being increased to approximately 4,000 rpm.

5. If the voltage is out of specification, proceed the following.

a. Check for the cause of uneven air flow through mass air flow sensor. Refer to following.
   - Crushed air ducts
   - Malfunctioning seal of air cleaner element
   - Uneven dirt of air cleaner element
   - Improper specification of intake air system parts

b. If NG, repair or replace malfunctioning part and perform step 2 to 4 again.
If OK, go to next step.

6. Turn ignition switch OFF.
7. Disconnect mass air flow sensor harness connector and reconnect it again.
8. Perform step 2 to 4 again.
9. If NG, clean or replace mass air flow sensor.

Without CONSULT-III

1. Reconnect all harness connectors disconnected.
2. Start engine and warm it up to normal operating temperature.
3. Check voltage between ECM terminal 58 (Mass air flow sensor signal) and ground.

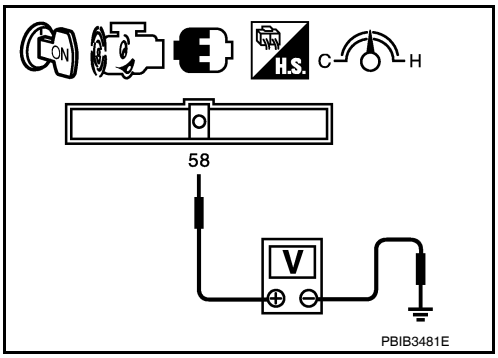

Condition	Voltage (V)
Ignition switch ON (Engine stopped.)	Approx 0.4
Idle (Engine is warmed-up to normal operating temperature.)	0.9 - 1.1
2,500 rpm (Engine is warmed-up to normal operating temperature.)	1.4 - 1.7
Idle to approx. 4,000 rpm	0.9 - 1.1 to 2.4*

*: Check for linear voltage rise in response to engine being increased to approximately 4,000 rpm.

4. If the voltage is out of specification, proceed the following.

a. Check for the cause of uneven air flow through mass air flow sensor. Refer to following.
- Crushed air ducts
- Malfunctioning seal of air cleaner element
- Uneven dirt of air cleaner element
- Improper specification of intake air system parts

b. If NG, repair or replace malfunctioning part and perform step 2 and 3 again.
If OK, go to next step.

5. Turn ignition switch OFF.
6. Disconnect mass air flow sensor harness connector and reconnect it again.
7. Perform step 2 and 3 again.
8. If NG, clean or replace mass air flow sensor.

Removal and Installation

INFOID:0000000005285821

MASS AIR FLOW SENSOR

Refer to EM-133.

DTC P0102, P0103 MAF SENSOR

Component Description

INFOID:0000000005285822

The mass air flow sensor (1) is placed in the stream of intake air. It measures the intake flow rate by measuring a part of the entire intake flow. The mass air flow sensor controls the temperature of the hot wire to a certain amount. The heat generated by the hot wire is reduced as the intake air flows around it. The more air, the greater the heat loss.
Therefore, the electric current supplied to hot wire is changed to maintain the temperature of the hot wire as air flow increases. The ECM detects the air flow by means of this current change.

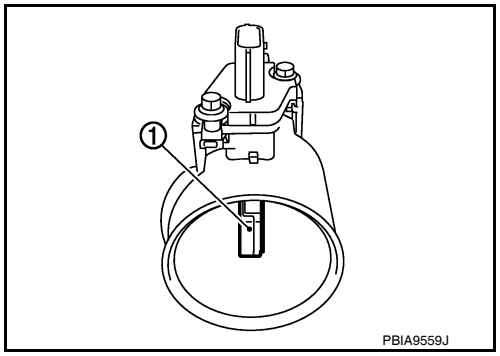

CONSULT-III Reference Value in Data Monitor Mode

INFOID:0000000005285823

Specification data are reference values.

Monitor item	Condition		Specification
MAS A/F SE-B1	See EC-1237.		
CAL/LD VALUE	• Engine: After warming up • Selector lever: P or N (CVT), Neutral (M/T) • Air conditioner switch: OFF • No load	Idle	10% - 35%
		2,500 rpm	10% - 35%
MASS AIRFLOW	• Engine: After warming up • Selector lever: P or N (CVT), Neutral (M/T) • Air conditioner switch: OFF • No load	Idle	1.0 - 4.0 g·m/s
		2,500 rpm	4.0 - 10.0 g·m/s

On Board Diagnosis Logic

INFOID:0000000005285824

These self-diagnoses have the one trip detection logic.

DTC No.	Trouble diagnosis name	DTC detecting condition	Possible cause
P0102 0102	Mass air flow sensor circuit low input	An excessively low voltage from the sensor is sent to ECM.	• Harness or connectors (Mass air flow sensor circuit is open or shorted.) • Intake air leaks • Mass air flow sensor
P0103 0103	Mass air flow sensor circuit high input	An excessively high voltage from the sensor is sent to ECM.	• Harness or connectors (Mass air flow sensor circuit is open or shorted.) • Mass air flow sensor

FAIL-SAFE MODE

When the malfunction is detected, the ECM enters fail-safe mode and the MIL illuminates.

Detected items	Engine operating condition in fail-safe mode
Mass air flow sensor circuit	Engine speed will not rise more than 2,400 rpm due to the fuel cut.

DTC Confirmation Procedure

INFOID:0000000005285825

NOTE:
If DTC Confirmation Procedure has been previously conducted, always turn ignition switch OFF and wait at least 10 seconds before conducting the next test.

PROCEDURE FOR DTC P0102

1. Start engine and wait at least 5 seconds.
2. Check DTC.
3. If DTC is detected, go to EC-1292, "Diagnosis Procedure".

PROCEDURE FOR DTC P0103

1. Turn ignition switch ON and wait at least 5 seconds.
2. Check DTC.
3. If DTC is detected, go to EC-1292, "Diagnosis Procedure".
   If DTC is not detected, go to next step.
4. Start engine and wait at least 5 seconds
5. Check DTC.
6. If DTC is detected, go to EC-1292, "Diagnosis Procedure".

Wiring Diagram

INFOID:0000000005285826

EC-MAFS-01

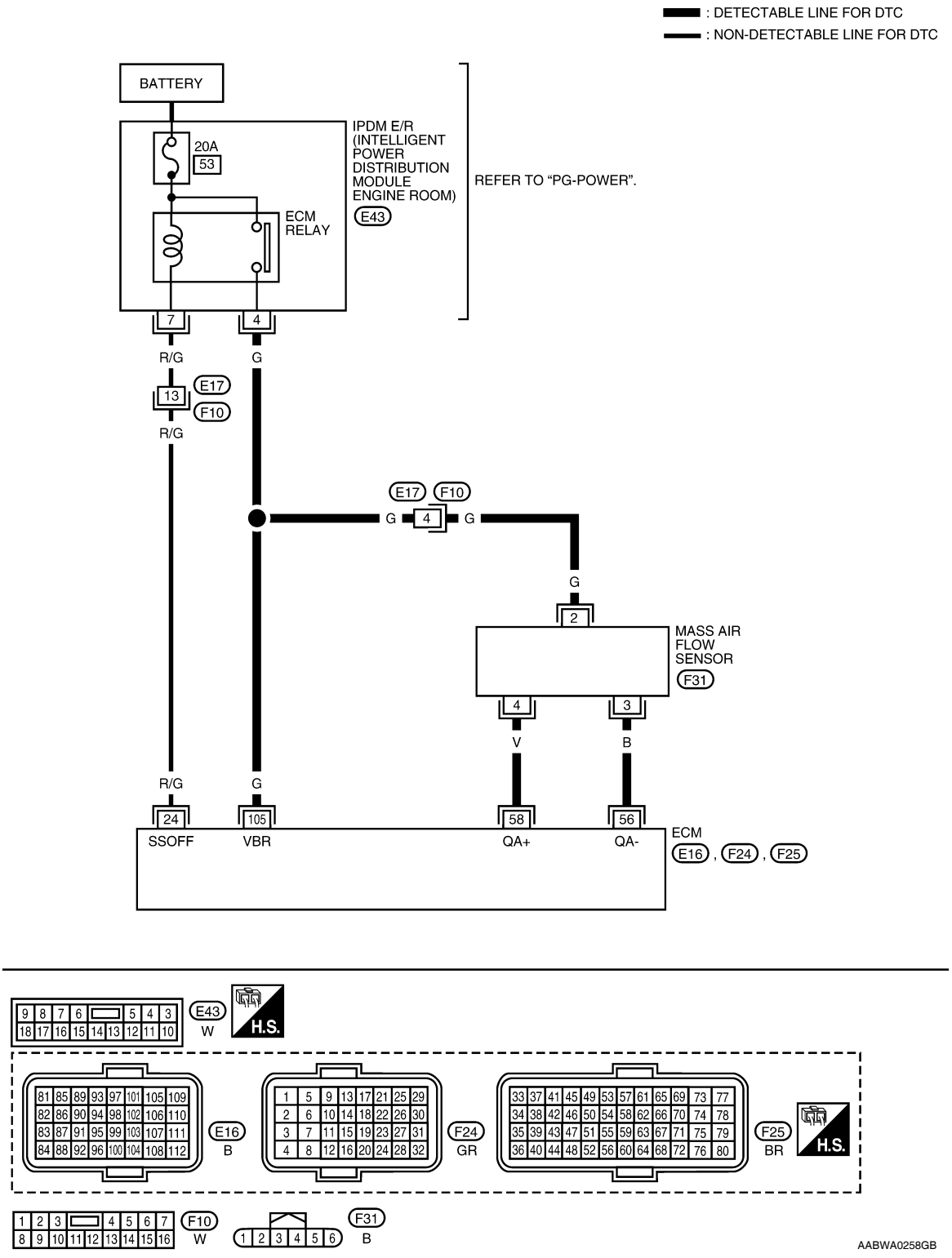

Specification data are reference values and are measured between each terminal and ground.

CAUTION:

Never use ECM ground terminals when measuring input/output voltage. Doing so may result in damage to the ECM's transistor. Use a ground other than ECM terminals, such as the ground.

TERMINAL NO.	WIRE COLOR	ITEM	CONDITION	DATA (DC Voltage)
24	R/G	ECM relay (Self shut-off)	**[Engine is running]** **[Ignition switch: OFF]** • For a few seconds after turning ignition switch OFF	0 - 1.0 V
			[Ignition switch: OFF] • More than a few seconds after turning ignition switch OFF	BATTERY VOLTAGE (11 - 14 V)
56	B	Sensor ground (Mass air flow sensor)	**[Engine is running]** • **Warm-up condition** • Idle speed	Approximately 0 V
58	V	Mass air flow sensor	**[Engine is running]** • **Warm-up condition** • Idle speed	0.9 - 1.1 V
			[Engine is running] • **Warm-up condition** • Engine speed: 2,500 rpm	1.4 - 1.7 V
105	G	Power supply for ECM	**[Ignition switch: ON]**	BATTERY VOLTAGE (11 - 14 V)

Diagnosis Procedure

INFOID:0000000005285827

1. INSPECTION START

Which malfunction (P0102 or P0103) is duplicated?

P0102 or P0103

P0102 >> GO TO 2.
P0103 >> GO TO 3.

2. CHECK INTAKE SYSTEM

Check the following for connection.
- Air duct
- Vacuum hoses
- Intake air passage between air duct and intake manifold

OK or NG

OK >> GO TO 3.
NG >> Reconnect the parts.

3. CHECK GROUND CONNECTIONS

1. Turn ignition switch OFF.
2. Loosen and retighten ground screws on the body.
   Refer to EC-1251, "Ground Inspection".

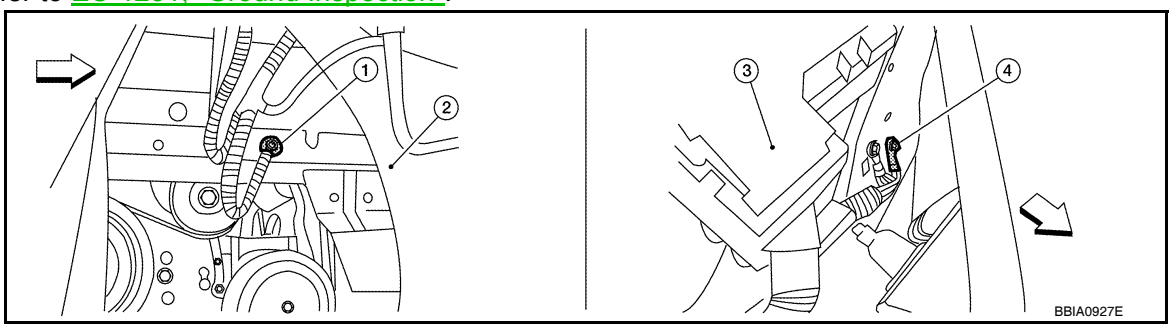

⇦: Vehicle front

1. Body ground E9 (view with front wheel RH and fender protector RH removed.)
2. Washer tank
3. Fuse and fusible link box
4. Body ground E15

OK or NG

OK >> GO TO 4.
NG >> Repair or replace ground connections.

4. CHECK MAF SENSOR POWER SUPPLY CIRCUIT

1. Disconnect mass air flow (MAF) sensor (1) harness connector.
- ⇦: Vehicle front
2. Turn ignition switch ON.

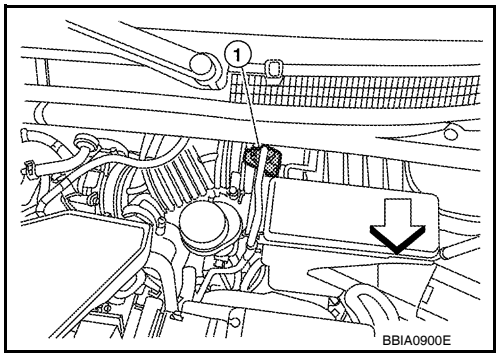

3. Check voltage between MAF sensor terminal 2 and ground with CONSULT-III or tester.

Voltage: Battery voltage

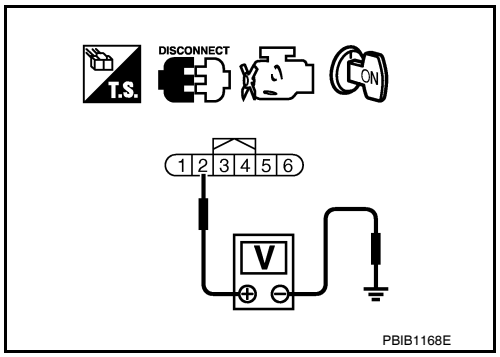

OK or NG

OK >> GO TO 6.
NG >> GO TO 5.

5. DETECT MALFUNCTIONING PART

Check the following.
- Harness connectors E17, F10
- Harness for open or short between mass air flow sensor and ECM
- Harness for open or short between mass air flow sensor and IPDM E/R

>> Repair open circuit or short to ground or short to power in harness or connectors.

6. CHECK MAF SENSOR GROUND CIRCUIT FOR OPEN AND SHORT

1. Turn ignition switch OFF.
2. Disconnect ECM harness connector.
3. Check harness continuity between MAF sensor terminal 3 and ECM terminal 56. Refer to Wiring Diagram.

Continuity should exist.

4. Also check harness for short to ground and short to power.

OK or NG

OK >> GO TO 7.
NG >> Repair open circuit or short to ground or short to power in harness or connectors.

7. CHECK MAF SENSOR INPUT SIGNAL CIRCUIT FOR OPEN AND SHORT

1. Check harness continuity between MAF sensor terminal 4 and ECM terminal 58.

Refer to Wiring Diagram.

Continuity should exist.

2. Also check harness for short to ground and short to power.

OK or NG

OK >> GO TO 8.
NG >> Repair open circuit or short to ground or short to power in harness or connectors.

8. CHECK MASS AIR FLOW SENSOR

Refer to EC-1294, "Component Inspection".

OK or NG

OK >> GO TO 9.
NG >> Replace mass air flow sensor.

9. CHECK INTERMITTENT INCIDENT

Refer to EC-1245.

>> **INSPECTION END**

Component Inspection

INFOID:0000000005285828

MASS AIR FLOW SENSOR

With CONSULT-III

1. Reconnect all harness connectors disconnected.
2. Start engine and warm it up to normal operating temperature.
3. Connect CONSULT-III and select “DATA MONITOR” mode.
4. Select “MAS A/F SE-B1” and check indication under the following conditions.

Condition	MAS A/F SE-B1 (V)
Ignition switch ON (Engine stopped.)	Approx 0.4
Idle (Engine is warmed-up to normal operating temperature.)	0.9 - 1.1
2,500 rpm (Engine is warmed-up to normal operating temperature.)	1.4 - 1.7
Idle to approx. 4,000 rpm	0.9 - 1.1 to 2.4*

*: Check for linear voltage rise in response to engine being increased to approximately 4,000 rpm.

5. If the voltage is out of specification, proceed the following.

a. Check for the cause of uneven air flow through mass air flow sensor. Refer to following.
   - Crushed air ducts
   - Malfunctioning seal of air cleaner element
   - Uneven dirt of air cleaner element
   - Improper specification of intake air system parts

b. If NG, repair or replace malfunctioning part and perform step 2 to 4 again.
   If OK, go to next step.

6. Turn ignition switch OFF.
7. Disconnect mass air flow sensor harness connector and reconnect it again.
8. Perform step 2 to 4 again.
9. If NG, clean or replace mass air flow sensor.

Without CONSULT-III

1. Reconnect all harness connectors disconnected.
2. Start engine and warm it up to normal operating temperature.

3. Check voltage between ECM terminal 58 (Mass air flow sensor signal) and ground.

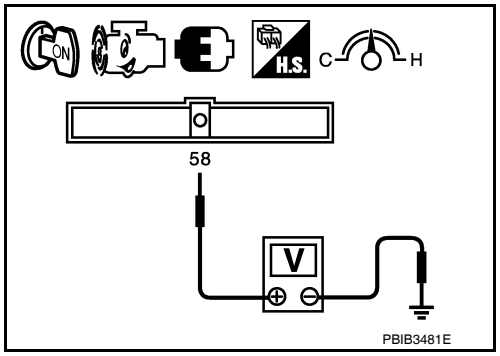

Condition	Voltage (V)
Ignition switch ON (Engine stopped.)	Approx 0.4
Idle (Engine is warmed-up to normal operating temperature.)	0.9 - 1.1
2,500 rpm (Engine is warmed-up to normal operating temperature.)	1.4 - 1.7
Idle to approx. 4,000 rpm	0.9 - 1.1 to 2.4*

*: Check for linear voltage rise in response to engine being increased to approximately 4,000 rpm.

4. If the voltage is out of specification, proceed the following.

a. Check for the cause of uneven air flow through mass air flow sensor. Refer to following.
   - Crushed air ducts
   - Malfunctioning seal of air cleaner element
   - Uneven dirt of air cleaner element
   - Improper specification of intake air system parts

b. If NG, repair or replace malfunctioning part and perform step 2 and 3 again.
   If OK, go to next step.

5. Turn ignition switch OFF.
6. Disconnect mass air flow sensor harness connector and reconnect it again.
7. Perform step 2 and 3 again.
8. If NG, clean or replace mass air flow sensor.

Removal and Installation

INFOID:0000000005285829

MASS AIR FLOW SENSOR

Refer to EM-133.

DTC P0112, P0113 IAT SENSOR

Component Description

INFOID:0000000005285830

The intake air temperature sensor is built-into the mass air flow sensor (1). The sensor detects intake air temperature and transmits a signal to the ECM.
The temperature sensing unit uses a thermistor which is sensitive to the change in temperature. Electrical resistance of the thermistor decreases in response to the rise in temperature.

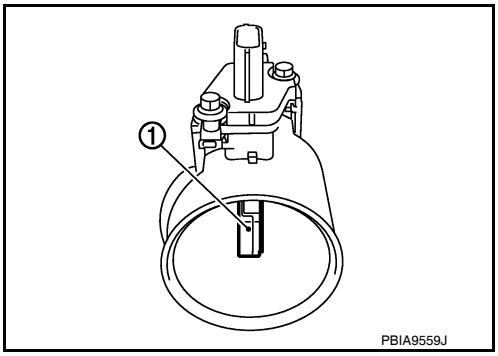

<Reference data>

Intake air temperature [°C (°F)]	Voltage* (V)	Resistance (kΩ)
25 (77)	3.3	1.800 - 2.200
80 (176)	1.2	0.283 - 0.359

*: This data is reference value and is measured between ECM terminal 50 (Intake air temperature sensor) and ground.

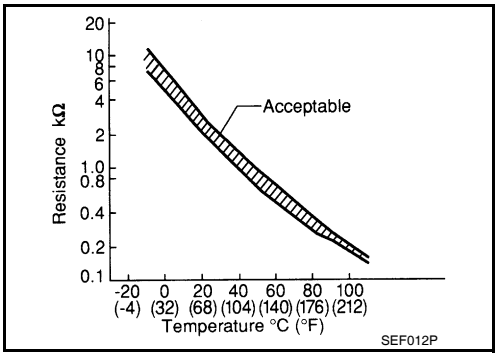

On Board Diagnosis Logic

INFOID:0000000005285831

DTC No.	Trouble diagnosis name	DTC detecting condition	Possible cause
P0112 0112	Intake air temperature sensor circuit low input	An excessively low voltage from the sensor is sent to ECM.	• Harness or connectors (Intake air temperature sensor circuit is open or shorted.) • Intake air temperature sensor
P0113 0113	Intake air temperature sensor circuit high input	An excessively high voltage from the sensor is sent to ECM.	

DTC Confirmation Procedure

INFOID:0000000005285832

NOTE:
If DTC Confirmation Procedure has been previously conducted, always turn ignition switch OFF and wait at least 10 seconds before conducting the next test.

1. Turn ignition switch ON and wait at least 5 seconds.
2. Check 1st trip DTC.
3. If 1st trip DTC is detected, go to EC-1297, "Diagnosis Procedure".

Wiring Diagram

INFOID:0000000005285833

EC-IATS-01

: DETECTABLE LINE FOR DTC
: NON-DETECTABLE LINE FOR DTC

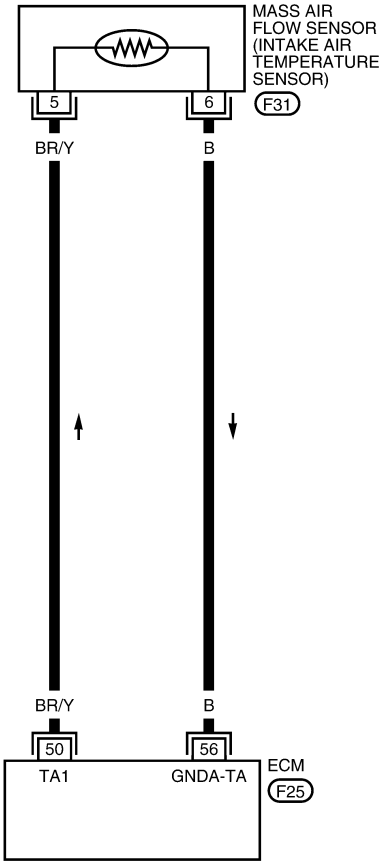

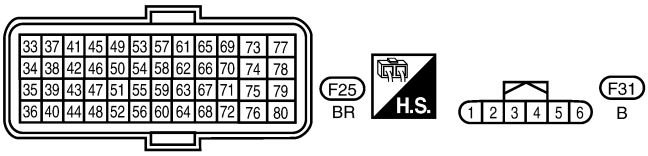

BBWA3028E

Diagnosis Procedure

INFOID:0000000005285834

1. CHECK GROUND CONNECTIONS

1. Turn ignition switch OFF.
2. Loosen and retighten ground screws on the body.

Refer to EC-1251, "Ground Inspection".

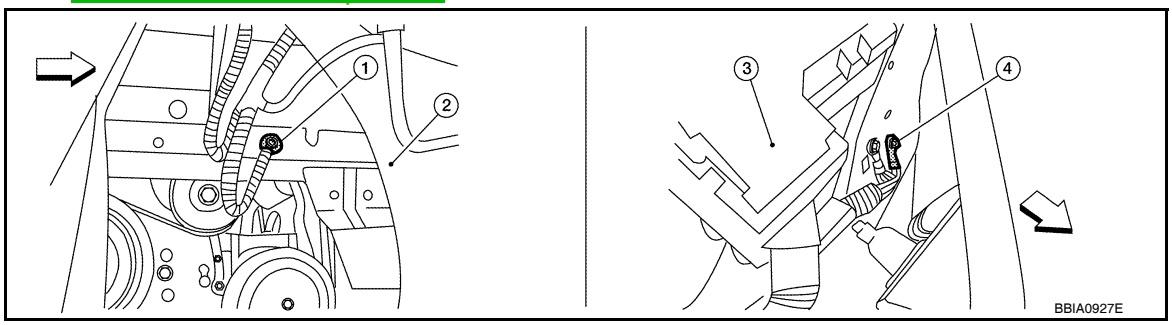

⇦: Vehicle front

1. Body ground E9 (view with front wheel RH and fender protector RH removed.)
2. Washer tank
3. Fuse and fusible link box
4. Body ground E15

OK or NG

OK >> GO TO 2.
NG >> Repair or replace ground connections.

2. CHECK INTAKE AIR TEMPERATURE SENSOR POWER SUPPLY CIRCUIT

1. Disconnect mass air flow sensor (with intake air temperature sensor) (1) harness connector.
- ⇦: Vehicle front
2. Turn ignition switch ON.

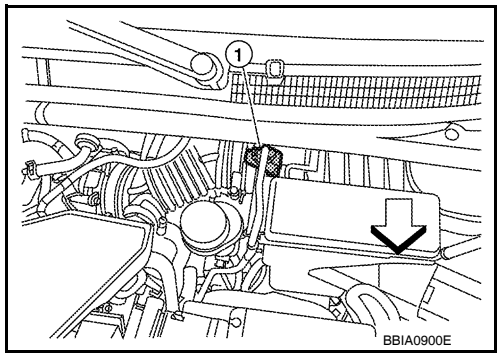

3. Check voltage between mass air flow sensor terminal 5 and ground with CONSULT-III or tester.

Voltage: Approximately 5 V

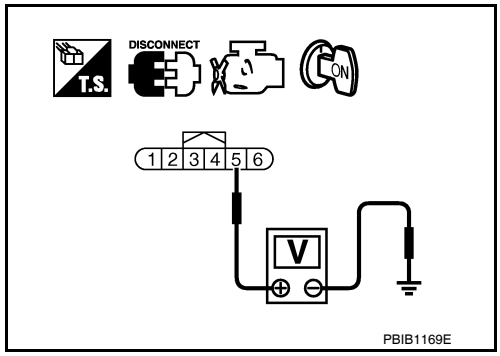

OK or NG

OK >> GO TO 3.
NG >> Repair open circuit or short to ground or short to power in harness or connectors.

3. CHECK INTAKE AIR TEMPERATURE SENSOR GROUND CIRCUIT FOR OPEN AND SHORT

1. Turn ignition switch OFF.
2. Disconnect ECM harness connector.
3. Check harness continuity between mass air flow sensor terminal 6 and ECM terminal 56. Refer to Wiring Diagram.

Continuity should exist.

4. Also check harness for short to ground and short to power.

OK or NG

OK >> GO TO 4.
NG >> Repair open circuit or short to ground or short to power in harness or connectors.

4. CHECK INTAKE AIR TEMPERATURE SENSOR

Refer to EC-1299, "Component Inspection".

OK or NG

OK >> GO TO 5.
NG >> Replace mass air flow sensor (with intake air temperature sensor).

5. CHECK INTERMITTENT INCIDENT

Refer to EC-1245.

>> **INSPECTION END**

Component Inspection

INFOID:0000000005285835

INTAKE AIR TEMPERATURE SENSOR

1. Check resistance between mass air flow sensor (1) terminals 5 and 6 under the following conditions.

Intake air temperature [°C (°F)]	Resistance (kΩ)
25 (77)	1.800 - 2.200

2. If NG, replace mass air flow sensor (with intake air temperature sensor).

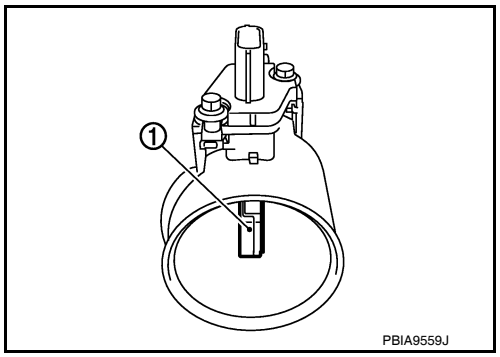

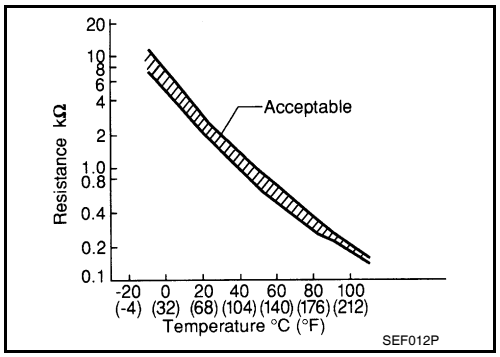

Removal and Installation

INFOID:0000000005285836

MASS AIR FLOW SENSOR

Refer to EM-133.

DTC P0116 ECT SENSOR

Description

INFOID:0000000005285837

Component Description

The engine coolant temperature sensor is used to detect the engine coolant temperature. The sensor modifies a voltage signal from the ECM. The modified signal returns to the ECM as the engine coolant temperature input. The sensor uses a thermistor which is sensitive to the change in temperature. The electrical resistance of the thermistor decreases as temperature increases.

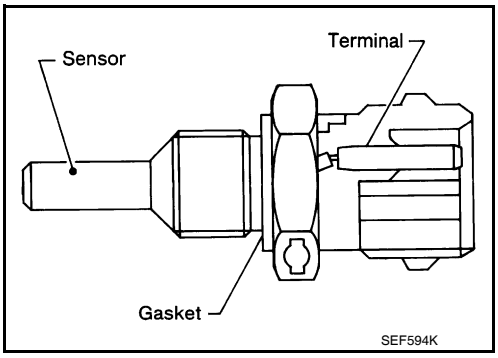

<Reference data>

Engine coolant temperature [°C (°F)]	Voltage* (V)	Resistance (kΩ)
–10 (14)	4.4	7.0 - 11.4
20 (68)	3.5	2.1 - 2.9
50 (122)	2.2	0.68 - 1.00
90 (194)	0.9	0.236 - 0.260

*: This data is reference values and is measured between ECM terminal 46 (Engine coolant temperature sensor) and ground.

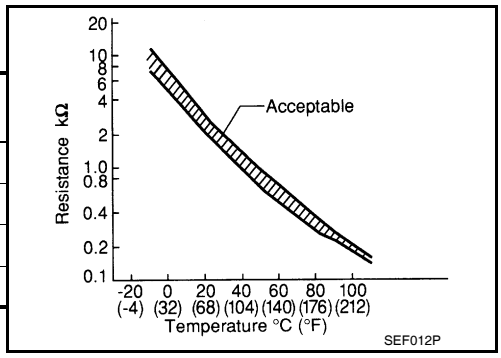

CAUTION:

Never use ECM ground terminals when measuring input/output voltage. Doing so may result in damage to the ECM's transistor. Use a ground other than ECM terminals, such as the ground.

On Board Diagnosis Logic

INFOID:0000000005285838

NOTE:

- **If DTC P0116 is displayed with P0117 or P0118, first perform the trouble diagnosis for DTC P0117 or P0118. Refer to EC-1303, "Component Description".**
- **This self-diagnosis has the one trip detection logic.**

DTC No.	Trouble diagnosis name	DTC detecting condition	Possible cause
P0116 0116	Engine coolant temperature sensor circuit range/performance	Engine coolant temperature signal from engine coolant temperature sensor does not fluctuate, even when some time has passed after starting the engine with pre-warming up condition.	• Harness or connectors (High or low resistance in the circuit) • Engine coolant temperature sensor

DTC Confirmation Procedure

INFOID:0000000005285839

NOTE:

If DTC Confirmation Procedure has been previously conducted, always turn ignition switch OFF and wait at least 10 seconds before conducting the next test.

TESTING CONDITION:

Before performing the following procedure, do not add fuel.

1. Start engine and warm it up to normal operating temperature.
2. Rev engine up to 2,000 rpm for more than 10 minutes.
3. Move the vehicle to a cool place, then stop engine.
4. Check resistance between "fuel level sensor and fuel pump" terminals 4 and 5.

5. Soak the vehicle until the resistance between “fuel level sensor and fuel pump” terminals 4 and 5 becomes 0.5 kΩ higher than the value measured before soaking.
   CAUTION:
   Never turn ignition switch ON during soaking time.
   NOTE:
   Soak time changes depending on ambient air temperature. It may take several hours.
6. Start engine and let it idle for 20 minutes.
7. Check DTC.
8. If DTC is detected, go to EC-1301, "Diagnosis Procedure".

Diagnosis Procedure

INFOID:0000000005285840

1. CHECK GROUND CONNECTIONS

1. Turn ignition switch OFF.
2. Loosen and retighten ground screws on the body.
   Refer to EC-1251, "Ground Inspection".

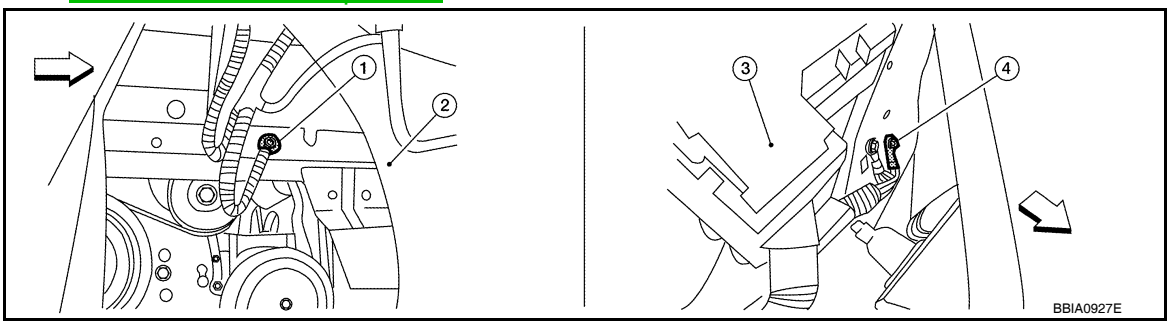

⇦: Vehicle front

1. Body ground E9 (view with front wheel RH and fender protector RH removed.)
2. Washer tank
3. Fuse and fusible link box
4. Body ground E15

OK or NG

OK >> GO TO 2.
NG >> Repair or replace ground connections.

2. CHECK ENGINE COOLANT TEMPERATURE SENSOR

Refer to EC-1301, "Component Inspection".

OK or NG

OK >> GO TO 3.
NG >> Replace engine coolant temperature sensor.

3. CHECK INTERMITTENT INCIDENT

Refer to EC-1245, "Diagnosis Procedure".

>> **INSPECTION END**

Component Inspection

INFOID:0000000005285841

ENGINE COOLANT TEMPERATURE SENSOR

1. Check resistance between engine coolant temperature sensor terminals 1 and 2 as shown in the figure.

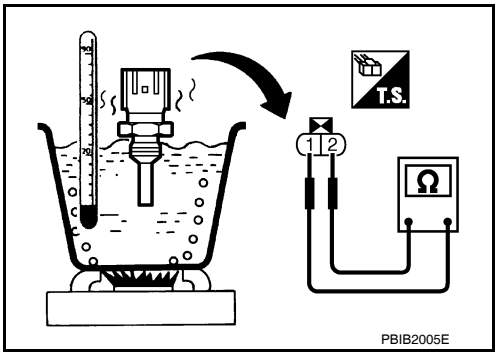

<Reference data>

Engine coolant temperature [°C (°F)]	Resistance (kΩ)
20 (68)	2.1 - 2.9
50 (122)	0.68 - 1.00
90 (194)	0.236 - 0.260

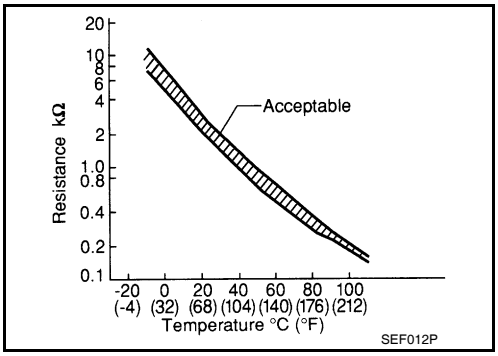

2. If NG, replace engine coolant temperature sensor.

Removal and Installation

INFOID:0000000005285842

ENGINE COOLANT TEMPERATURE SENSOR

Refer to CO-51, "Removal and Installation"

DTC P0117, P0118 ECT SENSOR

Component Description

INFOID:0000000005285843

The engine coolant temperature sensor is used to detect the engine coolant temperature. The sensor modifies a voltage signal from the ECM. The modified signal returns to the ECM as the engine coolant temperature input. The sensor uses a thermistor which is sensitive to the change in temperature. The electrical resistance of the thermistor decreases as temperature increases.

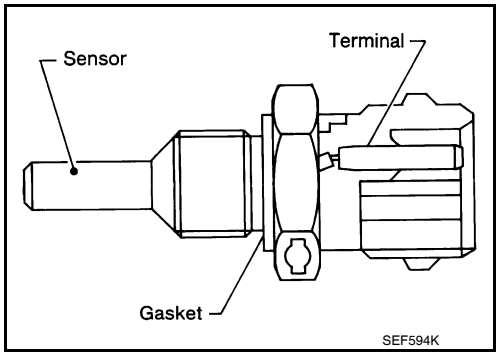

<Reference data>

Engine coolant temperature [°C (°F)]	Voltage* (V)	Resistance (kΩ)
–10 (14)	4.4	7.0 - 11.4
20 (68)	3.5	2.1 - 2.9
50 (122)	2.2	0.68 - 1.00
90 (194)	0.9	0.236 - 0.260

*: This data is reference value and is measured between ECM terminal 46 (Engine coolant temperature sensor) and ground.

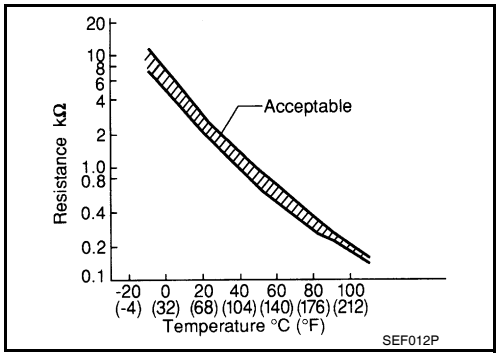

CAUTION:

Never use ECM ground terminals when measuring input/output voltage. Doing so may result in damage to the ECM's transistor. Use a ground other than ECM terminals, such as the ground.

On Board Diagnosis Logic

INFOID:0000000005285844

These self-diagnoses have the one trip detection logic.

DTC No.	Trouble Diagnosis Name	DTC Detecting Condition	Possible Cause
P0117 0117	Engine coolant temperature sensor circuit low input	An excessively low voltage from the sensor is sent to ECM.	• Harness or connectors (Engine coolant temperature sensor circuit is open or shorted.) • Engine coolant temperature sensor
P0118 0118	Engine coolant temperature sensor circuit high input	An excessively high voltage from the sensor is sent to ECM.	

FAIL-SAFE MODE

When the malfunction is detected, the ECM enters fail-safe mode and the MIL illuminates.

Detected items	Engine operating condition in fail-safe mode	
Engine coolant temperature sensor circuit	Engine coolant temperature will be determined by ECM based on the following condition CONSULT-III displays the engine coolant temperature decided by ECM.	
	Condition	Engine coolant temperature decided (CONSULT-III display)
	Just as ignition switch is turned ON or START	40°C (104°F)
	Approx. 4 minutes or more after engine starting	80°C (176°F)
	Except as shown above	40 - 80°C (104 - 176°F) (Depends on the time)
	When the fail-safe system for engine coolant temperature sensor is activated, the cooling fan operates while engine is running.	

DTC Confirmation Procedure

INFOID:0000000005285845

NOTE:
If DTC Confirmation Procedure has been previously conducted, always turn ignition switch OFF and wait at least 10 seconds before conducting the next test.

1. Turn ignition switch ON and wait at least 5 seconds.
2. Check DTC.
3. If DTC is detected, go to EC-1305, "Diagnosis Procedure".

Wiring Diagram

INFOID:0000000005285846

EC-ECTS-01

: DETECTABLE LINE FOR DTC
: NON-DETECTABLE LINE FOR DTC

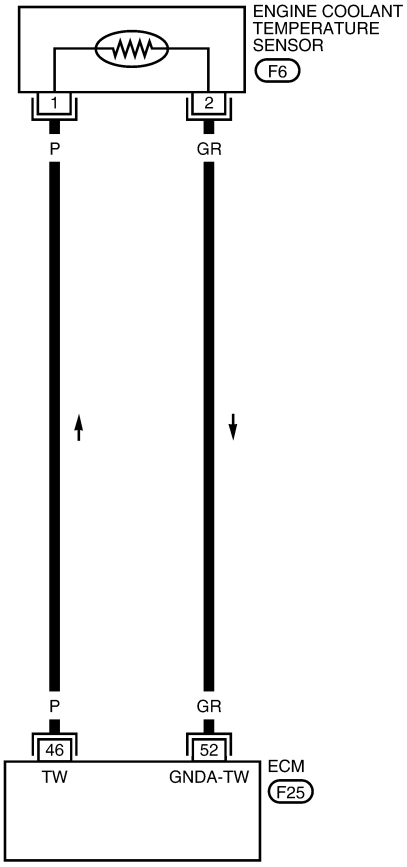

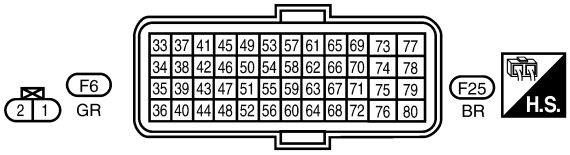

BBWA3029E

Diagnosis Procedure

INFOID:0000000005285847

1. CHECK GROUND CONNECTIONS

1. Turn ignition switch OFF.
2. Loosen and retighten ground screws on the body.

Refer to EC-1251, "Ground Inspection".

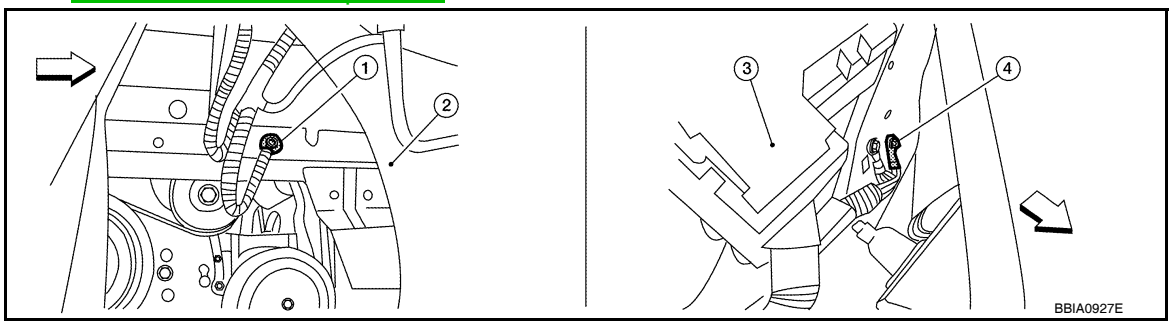

⇦: Vehicle front

1. Body ground E9 (view with front wheel RH and fender protector RH removed.)
2. Washer tank
3. Fuse and fusible link box
4. Body ground E15

OK or NG

OK >> GO TO 2.
NG >> Repair or replace ground connections.

2. CHECK ECT SENSOR POWER SUPPLY CIRCUIT

1. Disconnect engine coolant temperature (ECT) sensor (1) harness connector.
- ⇦: Vehicle front
2. Turn ignition switch ON.

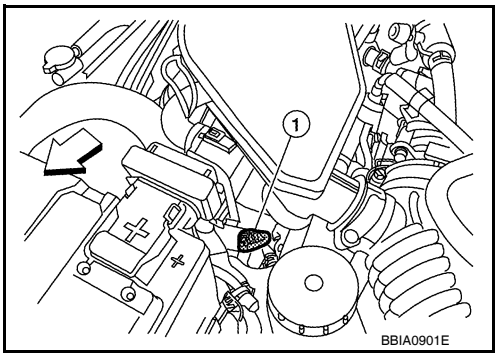

3. Check voltage between ECT sensor terminal 1 and ground with CONSULT-III or tester.

Voltage: Approximately 5 V

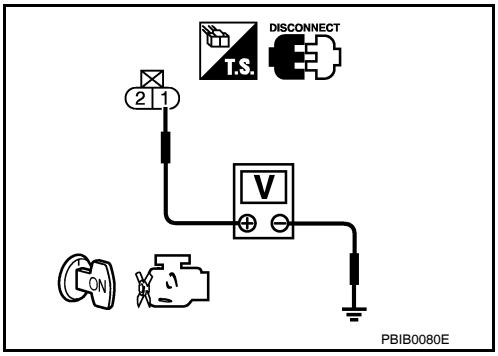

OK or NG

OK >> GO TO 3.
NG >> Repair open circuit or short to ground or short to power in harness or connectors.

3. CHECK ECT SENSOR GROUND CIRCUIT FOR OPEN AND SHORT

1. Turn ignition switch OFF.
2. Disconnect ECM harness connector.
3. Check harness continuity between ECM terminal 52 and ECT sensor terminal 2. Refer to Wiring Diagram.

Continuity should exist.

4. Also check harness for short to ground and short to power.

OK or NG

OK >> GO TO 4.
NG >> Repair open circuit or short to ground or short to power in harness or connectors.

4. CHECK ENGINE COOLANT TEMPERATURE SENSOR

Refer to EC-1307, "Component Inspection".

OK or NG

OK >> GO TO 5.
NG >> Replace engine coolant temperature sensor.

5. CHECK INTERMITTENT INCIDENT

Refer to EC-1245.

>> **INSPECTION END**

Component Inspection

INFOID:0000000005285848

ENGINE COOLANT TEMPERATURE SENSOR

1. Check resistance between engine coolant temperature sensor terminals 1 and 2 as shown in the figure.

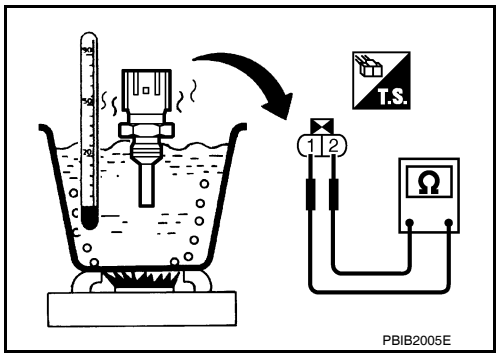

<Reference data>

Temperature [°C (°F)]	Resistance (kΩ)
20 (68)	2.1 - 2.9
50 (122)	0.68 - 1.00
90 (194)	0.236 - 0.260

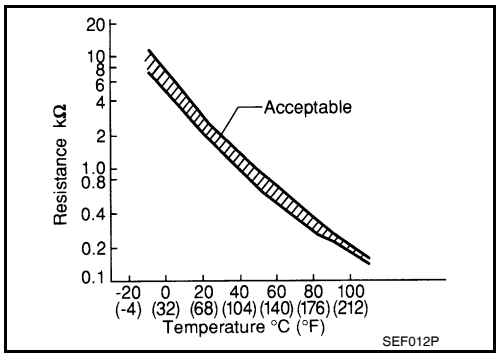

2. If NG, replace engine coolant temperature sensor.

Removal and Installation

INFOID:0000000005285849

ENGINE COOLANT TEMPERATURE SENSOR

Refer to EM-175.

DTC P0122, P0123 TP SENSOR

Component Description

INFOID:0000000005285850

Electric throttle control actuator consists of throttle control motor, throttle position sensor, etc. The throttle position sensor responds to the throttle valve movement.
The throttle position sensor has two sensors. These sensors are a kind of potentiometers which transform the throttle valve position into output voltage, and emit the voltage signal to the ECM. The ECM judges the current opening angle of the throttle valve from these signals and controls the throttle valve opening signal in response to driving conditions via the throttle control motor.

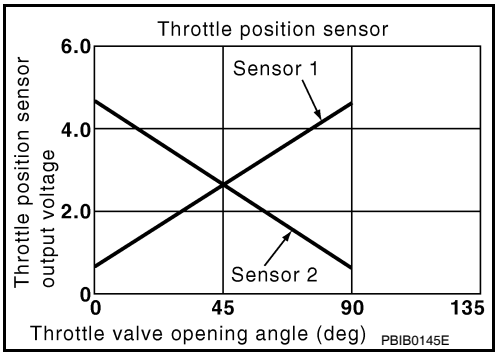

CONSULT-III Reference Value in Data Monitor Mode

INFOID:0000000005285851

Specification data are reference values.

Monitor item	Condition		Specification
TP SEN 1-B1 TP SEN 2-B1*	• Ignition switch: ON (Engine stopped)	Accelerator pedal: Fully released	More than 0.36 V
	• Selector lever: D (CVT), 1st (M/T)	Accelerator pedal: Fully depressed	Less than 4.75 V

*: Throttle position sensor 2 signal is converted by ECM internally. Thus, it differs from ECM terminal voltage signal.

On Board Diagnosis Logic

INFOID:0000000005285852

These self-diagnoses have the one trip detection logic.
NOTE:
If DTC P0122 or P0123 is displayed with DTC P0643, first perform the trouble diagnosis for DTC P0643. Refer to EC-1530.

DTC No.	Trouble diagnosis name	DTC detecting condition	Possible cause
P0122 0122	Throttle position sensor 2 circuit low input	An excessively low voltage from the TP sensor 2 is sent to ECM.	• Harness or connectors (TP sensor 2 circuit is open or shorted.) • Electric throttle control actuator (TP sensor 2)
P0123 0123	Throttle position sensor 2 circuit high input	An excessively high voltage from the TP sensor 2 is sent to ECM.	

FAIL-SAFE MODE

When the malfunction is detected, ECM enters fail-safe mode and the MIL illuminates.

Engine operation condition in fail-safe mode
The ECM controls the electric throttle control actuator in regulating the throttle opening in order for the idle position to be within +10 degrees. The ECM regulates the opening speed of the throttle valve to be slower than the normal condition. So, the acceleration will be poor.

DTC Confirmation Procedure

INFOID:0000000005285853

NOTE:
If DTC Confirmation Procedure has been previously conducted, always turn ignition switch OFF and wait at least 10 seconds before conducting the next test.
TESTING CONDITION:
Before performing the following procedure, confirm that battery voltage is more than 8 V at idle.

1. Start engine and let it idle for 1 second.
2. Check DTC.
3. If DTC is detected, go to EC-1310, "Diagnosis Procedure".

Wiring Diagram

INFOID:0000000005285854

EC-TPS2-01

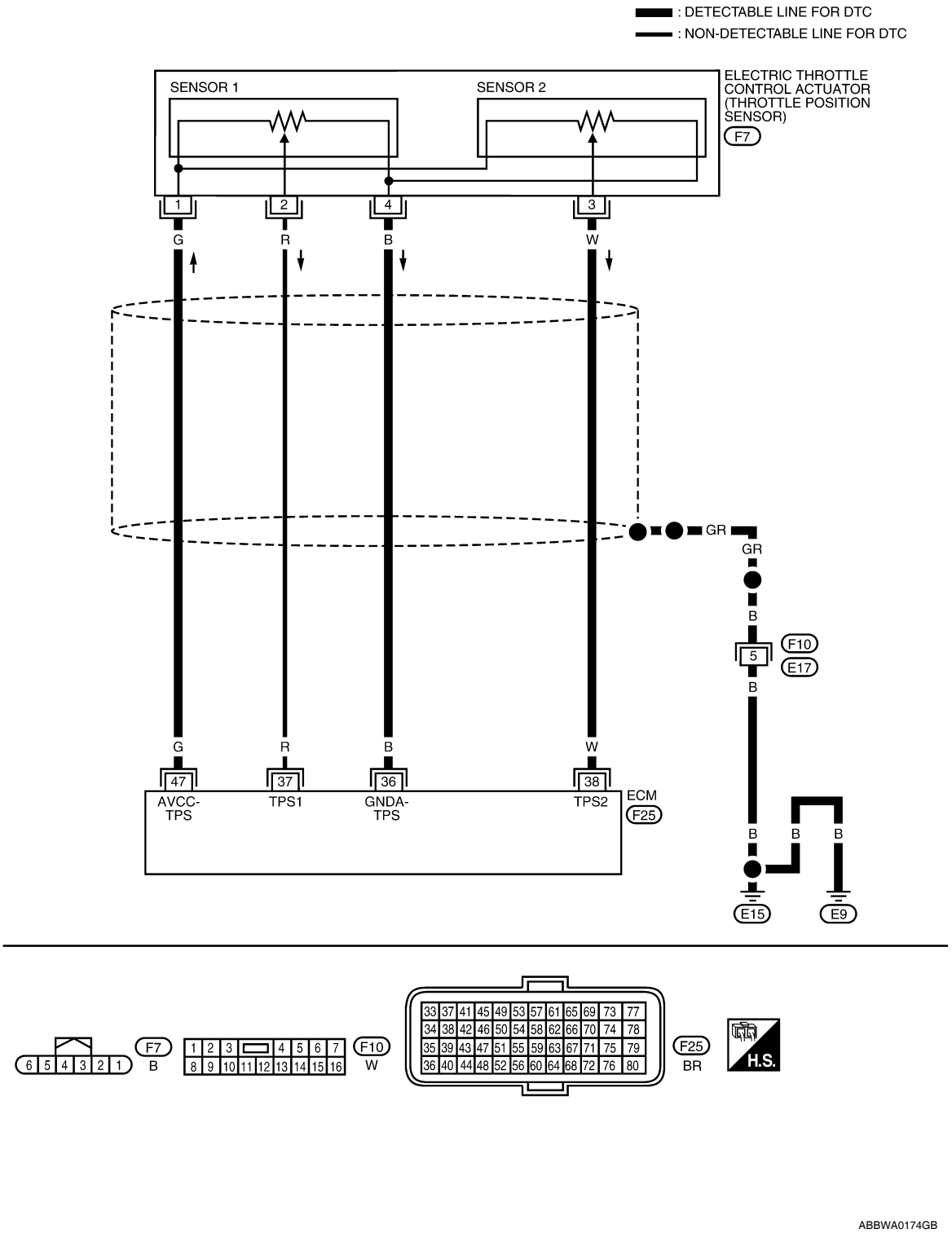

Specification data are reference values and are measured between each terminal and ground.

CAUTION:

Never use ECM ground terminals when measuring input/output voltage. Doing so may result in damage to the ECM's transistor. Use a ground other than ECM terminals, such as the ground.

TERMINAL NO.	WIRE COLOR	ITEM	CONDITION	DATA (DC Voltage)
36	B	Sensor ground (Throttle position sensor)	**[Engine is running]** • **Warm-up condition** • Idle speed	Approximately 0 V
37	R	Throttle position sensor 1	**[Ignition switch: ON]** • Engine stopped • Selector lever: D (CVT), 1st (M/T) • Accelerator pedal: Fully released	More than 0.36 V
			[Ignition switch: ON] • Engine stopped • Selector lever: D (CVT), 1st (M/T) • Accelerator pedal: Fully depressed	Less than 4.75 V
38	W	Throttle position sensor 2	**[Ignition switch: ON]** • Engine stopped • Selector lever: D (CVT), 1st (M/T) • Accelerator pedal: Fully released	Less than 4.75 V
			[Ignition switch: ON] • Engine stopped • Selector lever: D (CVT), 1st (M/T) • Accelerator pedal: Fully depressed	More than 0.36 V
47	G	Sensor power supply (Throttle position sensor)	**[Ignition switch: ON]**	Approximately 5 V

Diagnosis Procedure

INFOID:0000000005285855

1. CHECK GROUND CONNECTIONS

1. Turn ignition switch OFF.
2. Loosen and retighten ground screws on the body.
   Refer to EC-1251, "Ground Inspection".

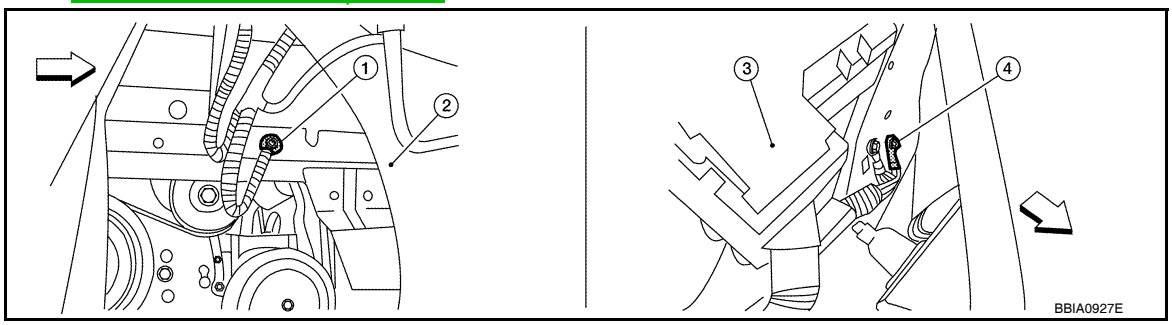

⇦: Vehicle front

1. Body ground E9 (view with front wheel RH and fender protector RH removed.)
2. Washer tank
3. Fuse and fusible link box
4. Body ground E15

OK or NG

OK >> GO TO 2.
NG >> Repair or replace ground connections.

2. CHECK THROTTLE POSITION SENSOR 2 POWER SUPPLY CIRCUIT

1. Disconnect electric throttle control actuator harness connector (1).
- ⇦: Vehicle front
2. Turn ignition switch ON.

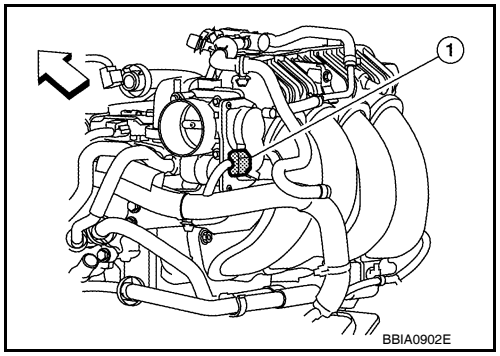

3. Check voltage between electric throttle control actuator terminal 1 and ground with CONSULT-III or tester.

Voltage: Approximately 5 V

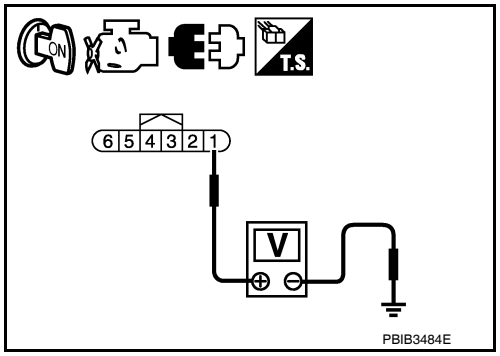

OK or NG

OK >> GO TO 3.
NG >> Repair open circuit or short to ground or short to power in harness or connectors.

3. CHECK THROTTLE POSITION SENSOR 2 GROUND CIRCUIT FOR OPEN AND SHORT

1. Turn ignition switch OFF.
2. Disconnect ECM harness connector.
3. Check harness continuity between electric throttle control actuator terminal 4 and ECM terminal 36. Refer to Wiring Diagram.

Continuity should exist.

4. Also check harness for short to ground and short to power.

OK or NG

OK >> GO TO 4.
NG >> Repair open circuit or short to ground or short to power in harness or connectors.

4. CHECK THROTTLE POSITION SENSOR 2 INPUT SIGNAL CIRCUIT FOR OPEN AND SHORT

1. Check harness continuity between ECM terminal 38 and electric throttle control actuator terminal 3. Refer to Wiring Diagram.

Continuity should exist.

2. Also check harness for short to ground and short to power.

OK or NG

OK >> GO TO 5.
NG >> Repair open circuit or short to ground or short to power in harness or connectors.

5. CHECK THROTTLE POSITION SENSOR

Refer to EC-1312, "Component Inspection".

OK or NG

OK >> GO TO 7.
NG >> GO TO 6.

6. REPLACE ELECTRIC THROTTLE CONTROL ACTUATOR

1. Replace the electric throttle control actuator.
2. Perform EC-1193, "Throttle Valve Closed Position Learning".
3. Perform EC-1193, "Idle Air Volume Learning".

>> **INSPECTION END**

7. CHECK INTERMITTENT INCIDENT

Refer to EC-1245.

>> **INSPECTION END**

Component Inspection

INFOID:0000000005285856

THROTTLE POSITION SENSOR

1. Reconnect all harness connectors disconnected.
2. Perform EC-1193, "Throttle Valve Closed Position Learning".
3. Turn ignition switch ON.
4. Set selector lever to D position (CVT) or 1st position (M/T).
5. Check voltage between ECM terminals 37 (TP sensor 1 signal), 38 (TP sensor 2 signal) and ground under the following conditions.

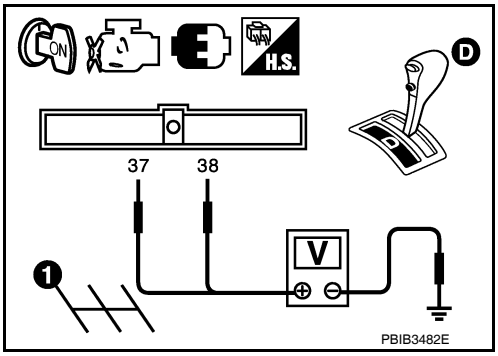

Terminal	Accelerator pedal	Voltage
37 (Throttle position sensor 1)	Fully released	More than 0.36 V
	Fully depressed	Less than 4.75 V
38 (Throttle position sensor 2)	Fully released	Less than 4.75 V
	Fully depressed	More than 0.36 V

6. If NG, replace electric throttle control actuator and go to the next step.
7. Perform EC-1193, "Throttle Valve Closed Position Learning".
8. Perform EC-1193, "Idle Air Volume Learning".

Removal and Installation

INFOID:0000000005285857

ELECTRIC THROTTLE CONTROL ACTUATOR

Refer to EM-135.

DTC P0125 ECT SENSOR

Description

INFOID:0000000005285858

COMPONENT DESCRIPTION

The engine coolant temperature sensor is used to detect the engine coolant temperature. The sensor modifies a voltage signal from the ECM. The modified signal returns to the ECM as the engine coolant temperature input. The sensor uses a thermistor which is sensitive to the change in temperature. The electrical resistance of the thermistor decreases as temperature increases.

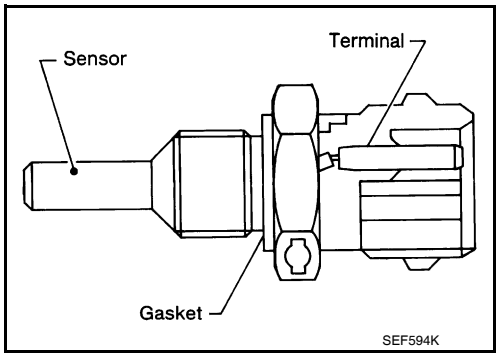

<Reference data>

Engine coolant temperature [°C (°F)]	Voltage* (V)	Resistance (kΩ)
–10 (14)	4.4	7.0 - 11.4
20 (68)	3.5	2.1 - 2.9
50 (122)	2.2	0.68 - 1.00
90 (194)	0.9	0.236 - 0.260

*: This data is reference values and is measured between ECM terminal 46 (Engine coolant temperature sensor) and ground.

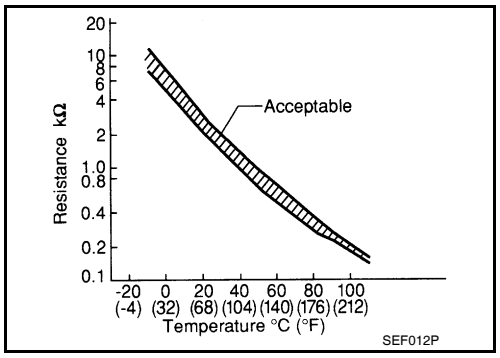

CAUTION:

Never use ECM ground terminals when measuring input/output voltage. Doing so may result in damage to the ECM's transistor. Use a ground other than ECM terminals, such as the ground.

On Board Diagnosis Logic

INFOID:0000000005285859

NOTE:

- **If DTC P0125 is displayed with P0117 or P0118, first perform the trouble diagnosis for DTC P0117 or P0118. Refer to EC-1303, "On Board Diagnosis Logic".**
- **If DTC P0125 is displayed with P0116, first perform the trouble diagnosis for DTC P0116. Refer to EC-1300, "On Board Diagnosis Logic".**

DTC No.	Trouble diagnosis name	DTC detecting condition	Possible cause
P0125 0125	Insufficient engine coolant temperature for closed loop fuel control	• Voltage sent to ECM from the sensor is not practical, even when some time has passed after starting the engine. • Engine coolant temperature is insufficient for closed loop fuel control.	• Harness or connectors (High resistance in the circuit) • Engine coolant temperature sensor • Thermostat

DTC Confirmation Procedure

INFOID:0000000005285860

CAUTION:

Be careful not to overheat engine.

NOTE:

If DTC Confirmation Procedure has been previously conducted, always turn ignition switch OFF and wait at least 10 seconds before conducting the next test.

WITH CONSULT-III

1. Turn ignition switch ON.
2. Select "DATA MONITOR" mode with CONSULT-III.

3. Check that “COOLAN TEMP/S” is above 20°C (68°F).
   If it is above 20°C (68°F), the test result will be OK.
   If it is below 20°C (68°F), go to following step.
4. Start engine and run it for 65 minutes at idle speed.
   If “COOLAN TEMP/S” increases to more than 20°C (68°F) within 65 minutes, stop engine because the test result will be OK.
5. Check 1st trip DTC.
6. If 1st trip DTC is detected, go to EC-1314, "Diagnosis Procedure".

WITH GST

Follow the procedure “WITH CONSULT-III” above.

Diagnosis Procedure

INFOID:0000000005285861

1. CHECK GROUND CONNECTIONS

1. Turn ignition switch OFF.
2. Loosen and retighten ground screws on the body.
   Refer to EC-1251, "Ground Inspection".

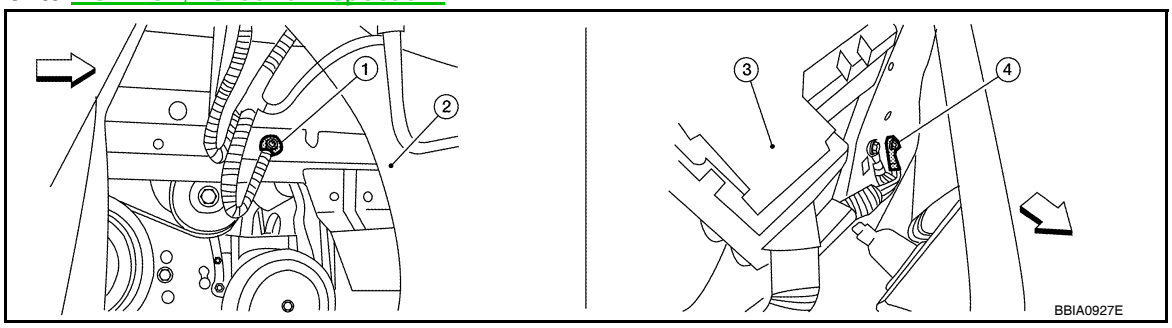

⇦: Vehicle front

1. Body ground E9 (view with front wheel RH and fender protector RH removed.)
2. Washer tank
3. Fuse and fusible link box
4. Body ground E15

OK or NG

OK >> GO TO 2.
NG >> Repair or replace ground connections.

2. CHECK ENGINE COOLANT TEMPERATURE SENSOR

Refer to EC-1315, "Component Inspection".

OK or NG

OK >> GO TO 3.
NG >> Replace engine coolant temperature sensor.

3. CHECK THERMOSTAT OPERATION

When the engine is cold [lower than 70°C (158°F)] condition, grasp lower radiator hose and confirm the engine coolant does not flow.

OK or NG

OK >> GO TO 4.
NG >> Repair or replace thermostat. Refer to CO-51.

4. CHECK INTERMITTENT INCIDENT

Refer to EC-1245.
Refer to EC-1305, "Wiring Diagram".

>> **INSPECTION END**

Component Inspection

INFOID:0000000005285862

ENGINE COOLANT TEMPERATURE SENSOR

1. Check resistance between engine coolant temperature sensor terminals 1 and 2 as shown in the figure.

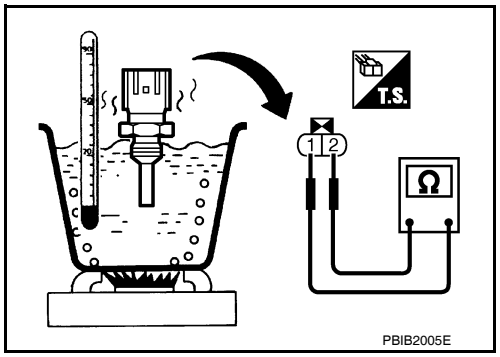

<Reference data>

Engine coolant temperature [°C (°F)]	Resistance (kΩ)
20 (68)	2.1 - 2.9
50 (122)	0.68 - 1.00
90 (194)	0.236 - 0.260

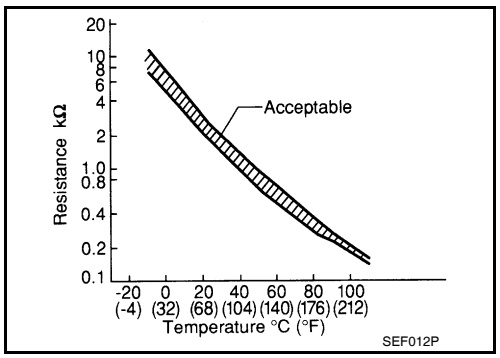

2. If NG, replace engine coolant temperature sensor.

Removal and Installation

INFOID:0000000005285863

ENGINE COOLANT TEMPERATURE SENSOR

Refer to CO-51

DTC P0127 IAT SENSOR

Component Description

INFOID:0000000005285864

The intake air temperature sensor is built into mass air flow sensor (1). The sensor detects intake air temperature and transmits a signal to the ECM.
The temperature sensing unit uses a thermistor which is sensitive to the change in temperature. Electrical resistance of the thermistor decreases in response to the temperature rise.

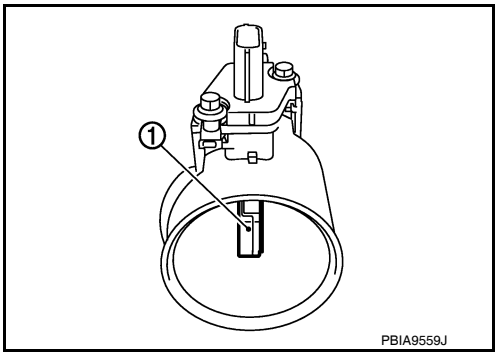

<Reference data>

Intake air temperature [°C (°F)]	Voltage* (V)	Resistance (kΩ)
25 (77)	3.3	1.800 - 2.200
80 (176)	1.2	0.283 - 0.359

*: This data is reference value and is measured between ECM terminal 50 (Intake air temperature sensor) and ground.

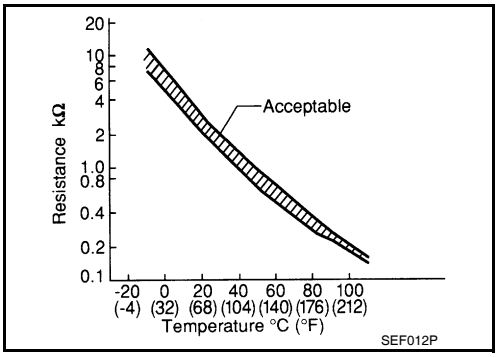

On Board Diagnosis Logic

INFOID:0000000005285865

DTC No.	Trouble diagnosis name	DTC detecting condition	Possible cause
P0127 0127	Intake air temperature too high	Rationally incorrect voltage from the sensor is sent to ECM, compared with the voltage signal from engine coolant temperature sensor.	• Harness or connectors (Intake temperature sensor circuit is open or shorted) • Intake air temperature sensor

DTC Confirmation Procedure

INFOID:0000000005285866

CAUTION:
Always drive vehicle at a safe speed.
NOTE:
If DTC Confirmation Procedure has been previously conducted, always turn ignition switch OFF and wait at least 10 seconds before conducting the next test.
TESTING CONDITION:
This test may be conducted with the drive wheels lifted in the shop or by driving the vehicle. If a road test is expected to be easier, it is unnecessary to lift the vehicle.

WITH CONSULT-III

1. Wait until engine coolant temperature is less than 90°C (194°F)

a. Turn ignition switch ON.
b. Select “DATA MONITOR” mode with CONSULT-III.
c. Check the engine coolant temperature.
d. If the engine coolant temperature is not less than 90°C (194°F), turn ignition switch OFF and cool down engine.
   • Perform the following steps before engine coolant temperature is above 90°C (194°F).

2. Turn ignition switch ON.
3. Select “DATA MONITOR” mode with CONSULT-III.

4. Start engine.
5. Hold vehicle speed at more than 70 km/h (43 MPH) for 100 consecutive seconds.
6. Check 1st trip DTC.
7. If 1st trip DTC is detected, go to EC-1317, "Diagnosis Procedure".

WITH GST

Follow the procedure “WITH CONSULT-III” above.

Diagnosis Procedure

INFOID:0000000005285867

1. CHECK GROUND CONNECTIONS

1. Turn ignition switch OFF.
2. Loosen and retighten ground screws on the body.
   Refer to EC-1251, "Ground Inspection".

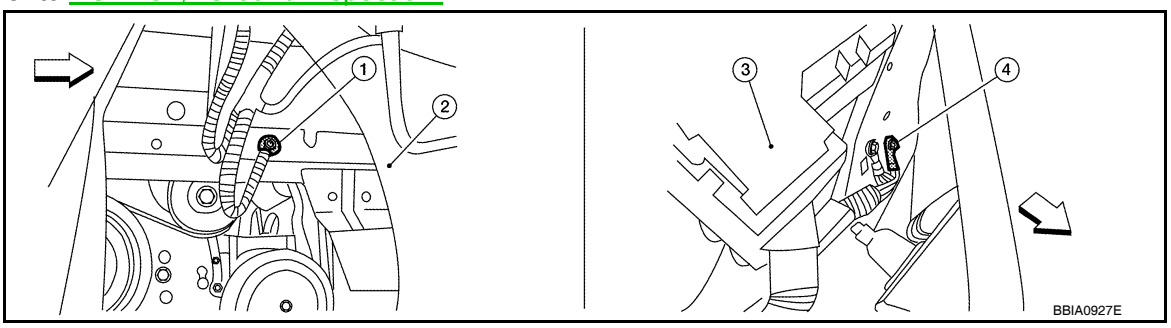

⇦: Vehicle front

1. Body ground E9 (view with front wheel RH and fender protector RH removed.)
2. Washer tank
3. Fuse and fusible link box
4. Body ground E15

OK or NG

OK >> GO TO 2.
NG >> Repair or replace ground connections.

2. CHECK INTAKE AIR TEMPERATURE SENSOR

Refer to EC-1317, "Component Inspection".

OK or NG

OK >> GO TO 3.
NG >> Replace mass air flow sensor (with intake air temperature sensor).

3. CHECK INTERMITTENT INCIDENT

Refer to EC-1245.
Refer to EC-1297, "Wiring Diagram".

>> **INSPECTION END**

Component Inspection

INFOID:0000000005285868

INTAKE AIR TEMPERATURE SENSOR

1. Check resistance between intake air temperature sensor (1) terminals 5 and 6 under the following conditions.

Intake air temperature [°C (°F)]	Resistance (kΩ)
25 (77)	1.800 - 2.200

2. If NG, replace mass air flow sensor (with intake air temperature sensor).

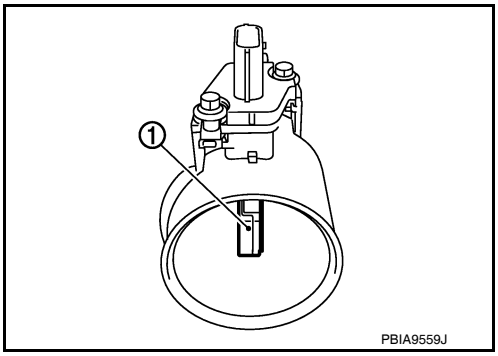

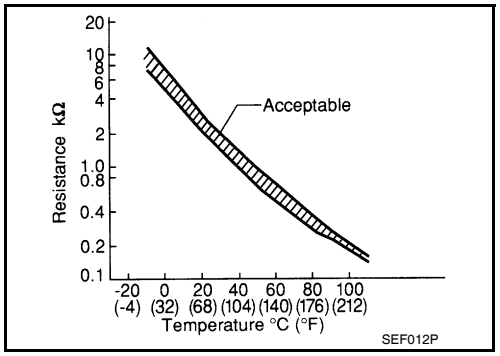

Removal and Installation

INFOID:0000000005285869

MASS AIR FLOW SENSOR
Refer to EM-133.

DTC P0128 THERMOSTAT FUNCTION

On Board Diagnosis Logic

INFOID:0000000005285870

NOTE:
If DTC P0128 is displayed with DTC P0300, P0301, P0302, P0303 or P0304, first perform the trouble diagnosis for DTC P0300, P0301, P0302, P0303, P0304. Refer to EC-1415, "DTC Confirmation Procedure".

Engine coolant temperature has not risen enough to open the thermostat even though the engine has run long enough. This is due to a leak in the seal or the thermostat stuck open.

DTC No.	Trouble diagnosis name	DTC detecting condition	Possible cause
P0128 0128	Thermostat function	The engine coolant temperature does not reach to specified temperature even though the engine has run long enough.	• Thermostat • Leakage from sealing portion of thermostat • Engine coolant temperature sensor

DTC Confirmation Procedure

INFOID:0000000005285871

WITH CONSULT-III

CAUTION:
Always drive vehicle at a safe speed.
NOTE:
If DTC Confirmation Procedure has been previously conducted, always turn ignition switch OFF and wait at least 10 seconds before conducting the next test.
TESTING CONDITION:
- **For best results, perform at ambient temperature of –10°C (14°F) or higher.**
- **For best results, perform at engine coolant temperature of –10°C (14°F) to 56°C (133°F).**
- **Before performing the following procedure, do not add fuel.**

1. Turn A/C switch OFF.
2. Turn blower fan switch OFF.
3. Turn ignition switch ON.
4. Select “COOLAN TEMP/S” in “DATA MONITOR” mode with CONSULT-III.
5. Check the indication of “COOLAN TEMP/S”.
   If it is below 75°C (167°F), go to next step.
   If it is above 75°C (167°F), cool down the engine to less than 75°C (167°F). Then go to next steps.
6. Start engine.
7. Drive vehicle for 10 consecutive minutes under the following conditions.

VHCL SPEED SE	More than 56 km/h (35 MPH)

   If “COOLAN TEMP/S” increases to more than 75°C (167°F) within 10 minutes, turn ignition switch OFF because the test result will be OK.
8. Check 1st trip DTC.
9. If 1st trip DTC is detected, go to EC-1319, "Diagnosis Procedure".

WITH GST

Follow the procedure “With CONSULT-III” above.

Diagnosis Procedure

INFOID:0000000005285872

1. CHECK ENGINE COOLANT TEMPERATURE SENSOR

Refer to EC-1320, "Component Inspection".

OK or NG

OK >> GO TO 2.
NG >> Replace engine coolant temperature sensor.

2. CHECK THERMOSTAT

Refer to CO-51, "Removal and Installation".

OK or NG

OK >> INSPECTION END
NG >> Replace thermostat.

Component Inspection

INFOID:0000000005285873

ENGINE COOLANT TEMPERATURE SENSOR

1. Check resistance between engine coolant temperature sensor terminals 1 and 2 as shown in the figure.

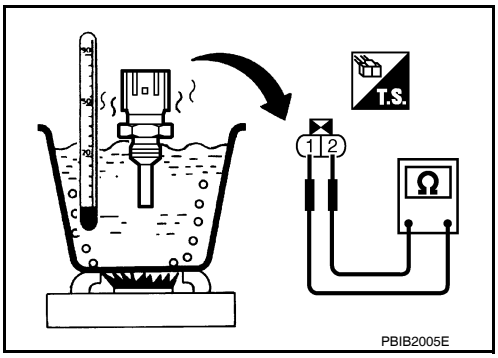

<Reference data>

Engine coolant temperature [°C (°F)]	Resistance (kΩ)
20 (68)	2.1 - 2.9
50 (122)	0.68 - 1.00
90 (194)	0.236 - 0.260

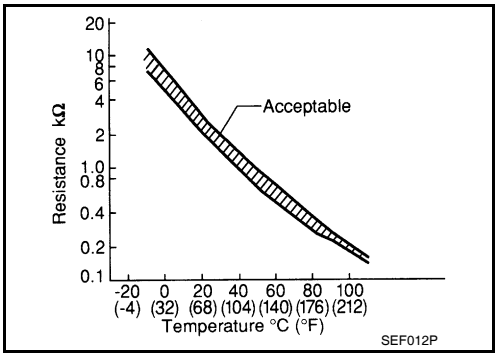

2. If NG, replace engine coolant temperature sensor.

Removal and Installation

INFOID:0000000005285874

ENGINE COOLANT TEMPERATURE SENSOR

Refer to CO-51.

DTC P0130, P0150 A/F SENSOR 1

Component Description

INFOID:0000000005285875

The air fuel ratio (A/F) sensor 1 is a planar one-cell limit current sensor. The sensor element of the A/F sensor 1 is composed an electrode layer, which transports ions. It has a heater in the element.
The sensor is capable of precise measurement λ = 1, but also in the lean and rich range. Together with its control electronics, the sensor outputs a clear, continuous signal throughout a wide λ range.
The exhaust gas components diffuse through the diffusion layer at the sensor cell. An electrode layer is applied voltage, and this current relative oxygen density in lean. Also this current relative hydrocarbon density in rich.
Therefore, the A/F sensor 1 is able to indicate air fuel ratio by this electrode layer of current. In addition, a heater is integrated in the sensor to ensure the required operating temperature of approximately 800°C (1,472°F).

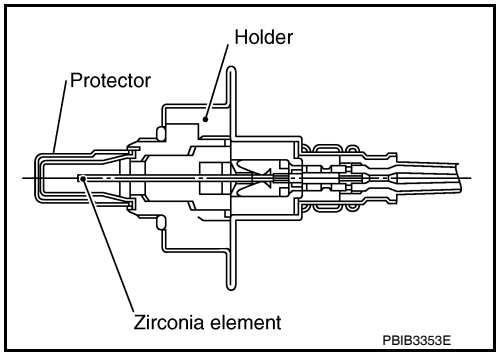

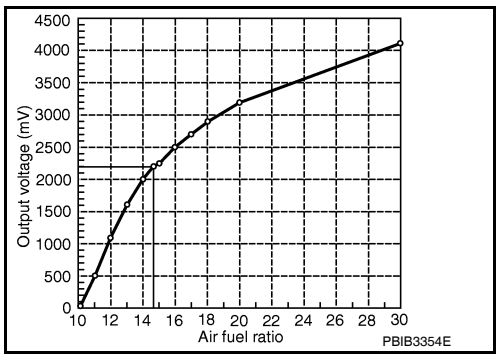

CONSULT-III Reference Value in Data Monitor Mode

INFOID:0000000005285876

Specification data are reference values.

Monitor item	Condition		Specification
A/F SEN1 (B1) A/F SEN1 (B2)	• Engine: After warming up	Maintaining engine speed at 2,000 rpm	Fluctuates around 2.2 V

On Board Diagnosis Logic

INFOID:0000000005285877

To judge the malfunction, the diagnosis checks that the A/F signal computed by ECM from the air fuel ratio (A/F) sensor 1 signal fluctuates according to fuel feedback control.

DTC No.	Trouble diagnosis name	DTC detecting condition		Possible Cause
P0130 0130 (Bank 1)	Air fuel ratio (A/F) sensor 1 circuit	A)	The A/F signal computed by ECM from the A/F sensor 1 signal is constantly in the range other than approx. 2.2 V.	• Harness or connectors [Air fuel ratio (A/F) sensor 1 circuit is open or shorted.] • Air fuel ratio (A/F) sensor 1
P0150 0150 (Bank 2)		B)	The A/F signal computed by ECM from the A/F sensor 1 signal is constantly approx. 2.2 V.	

DTC Confirmation Procedure

INFOID:0000000005285878

Perform PROCEDURE FOR MALFUNCTION A first.
If the DTC cannot be confirmed, perform PROCEDURE FOR MALFUNCTION B.
NOTE:
If DTC Confirmation Procedure has been previously conducted, always turn ignition switch OFF and wait at least 10 seconds before conducting the next test.
TESTING CONDITION:
Before performing the following procedure, confirm that battery voltage is more than 11 V at idle.

PROCEDURE FOR MALFUNCTION A

With CONSULT-III
1. Start engine and warm it up to normal operating temperature.
2. Select “DATA MONITOR” mode with CONSULT-III.
3. Let engine idle for 2 minutes.
4. Check 1st trip DTC.
5. If 1st trip DTC is detected, go to EC-1326, "Diagnosis Procedure".

With GST
Follow the procedure “With CONSULT-III” above.

PROCEDURE FOR MALFUNCTION B
CAUTION:
Always drive vehicle at a safe speed.

With CONSULT-III
1. Start engine and warm it up to normal operating temperature.
2. Select “A/F SEN1 (B1)” or “A/F SEN 1 (B2)” in “DATA MONITOR” mode with CONSULT-III.
3. Check “A/F SEN1 (B1)” or “A/F SEN 1 (B2)” indication.
   If the indication is constantly approx. 2.2 V and does not fluctuates, go to EC-1326, "Diagnosis Procedure".
   If the indication fluctuates around 2.2 V, go to next step.
4. Select “A/F SEN1 (B1) P1276 ” (for P0130) or “A/F SEN 1 (B2) P1286 ” (for DTC P0150) of “A/F SEN1” in “DTC WORK SUPPORT” mode with CONSULT-III.
5. Touch “START”.
6. When the following conditions are met, “TESTING” will be displayed on the CONSULT-III screen.

ENG SPEED	1,000 - 3,200 rpm
VHCL SPEED SE	More than 64 km/h (40 MPH)
B/FUEL SCHDL	1.0 - 11.5 msec
Selector lever	D position (CVT) 5th position (M/T)

   If “TESTING” is not displayed after 20 seconds, retry from step 2.
7. Release accelerator pedal fully.
   NOTE:
   Never apply brake during releasing the accelerator pedal.
8. Check that “TESTING” changes to “COMPLETED”.
   If “TESTING” changed to “OUT OF CONDITION”, retry from step 6.
9. Check that “OK” is displayed after touching “SELF-DIAG RESULTS”.
   If “NG” is displayed, go to EC-1326, "Diagnosis Procedure".

Overall Function Check

INFOID:0000000005285879

PROCEDURE MALFUNCTION B
Use this procedure to check the overall function of the A/F sensor 1 circuit. During this check, a 1st trip DTC might not be confirmed.

With GST
1. Start engine and warm it up to normal operating temperature.
2. Drive the vehicle at a speed of 80 km/h (50 MPH) for a few minutes in the suitable gear position.
3. Set selector lever to D position (CVT) or 5th position (M/T), then release the accelerator pedal fully until the vehicle speed decreases to 50 km/h (31 MPH).
   NOTE:
   Never apply brake during releasing the accelerator pedal.
4. Repeat steps 2 and 3 for five times.
5. Stop the vehicle and turn ignition switch OFF.
6. Wait at least 10 seconds and restart engine.
7. Repeat steps 2 and 3 for 5 times.
8. Stop the vehicle and connect GST to the vehicle.
9. Check that no 1st trip DTC is displayed.

If 1st trip DTC is displayed, go to EC-1326, "Diagnosis Procedure".

Wiring Diagram

INFOID:0000000005285880

BANK 1

EC-AF1B1-01

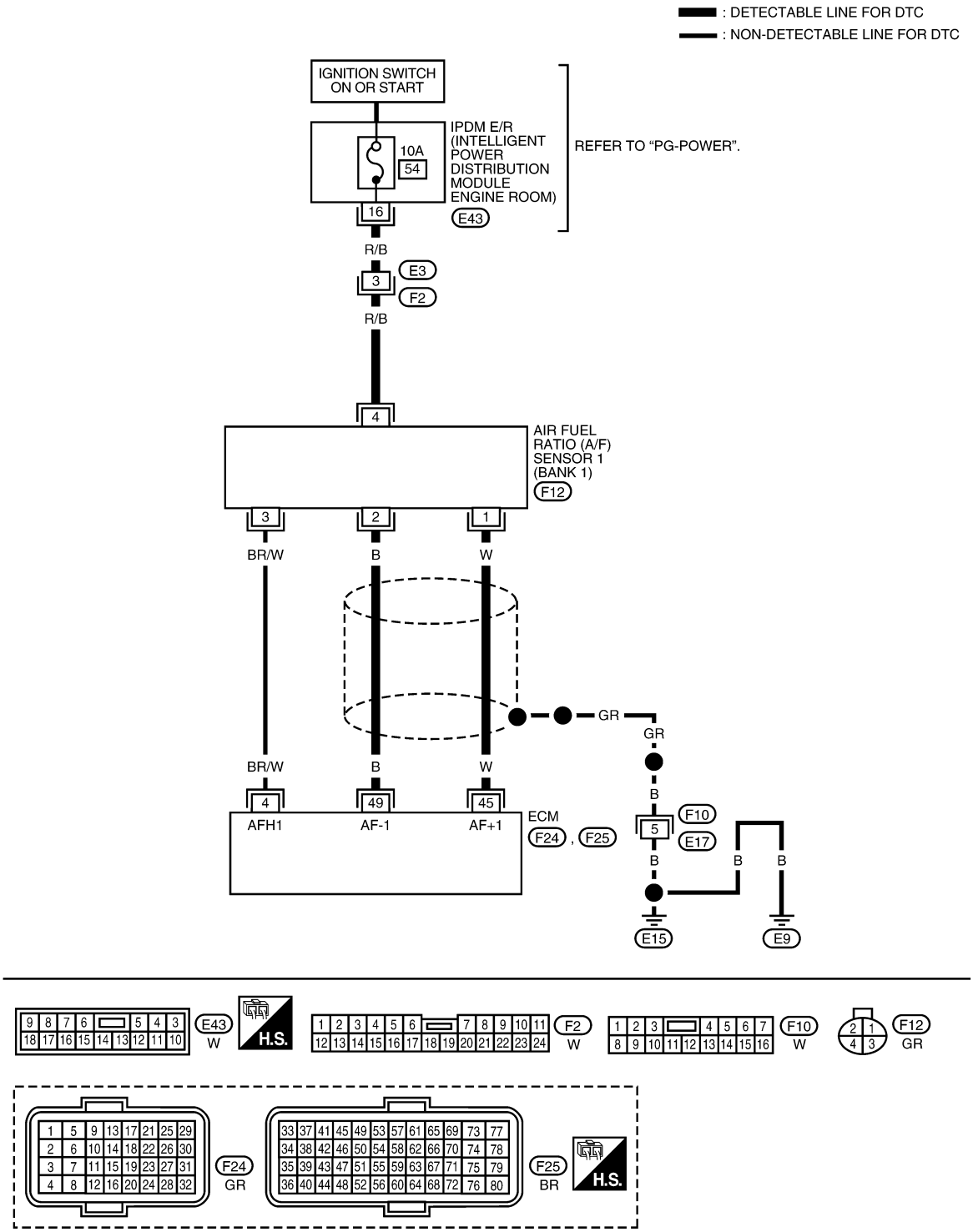

Specification data are reference values and are measured between each terminal and ground.
Pulse signal is measured by CONSULT-III.

CAUTION:

Never use ECM ground terminals when measuring input/output voltage. Doing so may result in damage to the ECM's transistor. Use a ground other than ECM terminals, such as the ground.

TERMINAL NO.	WIRE COLOR	ITEM	CONDITION	DATA (DC Voltage)
4	BR/W	A/F sensor 1 heater (Bank 1)	**[Engine is running]** • **Warm-up condition** • Idle speed (More than 140 seconds after starting engine)	Approximately 2.9 - 8.8 V★ 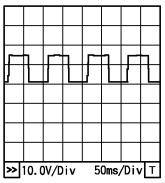 PBIA8148J
45	W	A/F sensor 1 (Bank 1)	**[Engine is running]** • **Warm-up condition** • Engine speed: 2,000 rpm	Approximately 1.8 V Output voltage varies with air fuel ratio.
49	B	A/F sensor 1 (Bank 1)	**[Ignition switch: ON]**	Approximately 2.2 V

★: Average voltage for pulse signal (Actual pulse signal can be confirmed by oscilloscope.)

EC-AF1B2-01

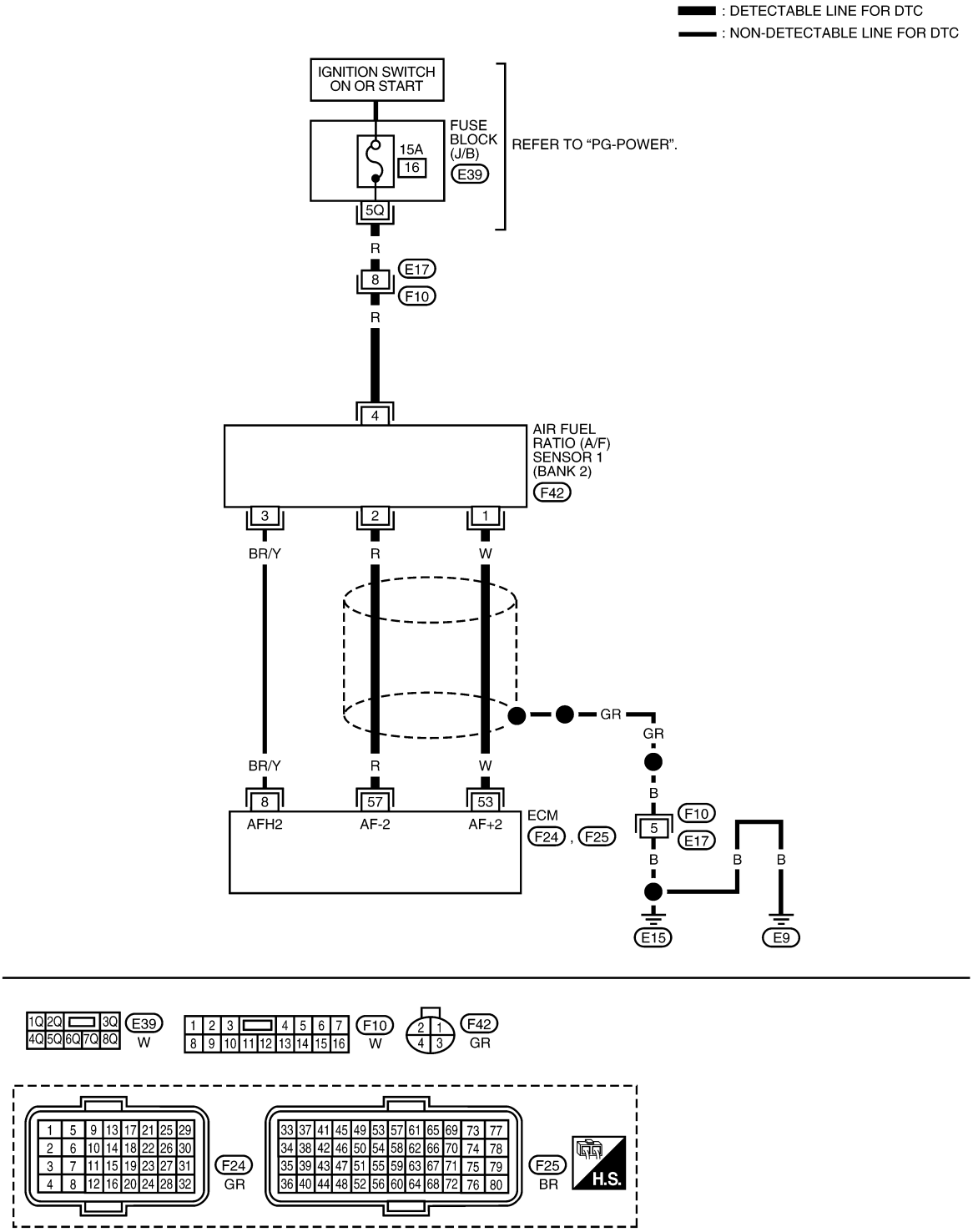

Specification data are reference values and are measured between each terminal and ground.
Pulse signal is measured by CONSULT-III.

CAUTION:

Never use ECM ground terminals when measuring input/output voltage. Doing so may result in damage to the ECM's transistor. Use a ground other than ECM terminals, such as the ground.

TERMINAL NO.	WIRE COLOR	ITEM	CONDITION	DATA (DC Voltage)
8	BR/Y	A/F sensor 1 heater (Bank 2)	**[Engine is running]** • **Warm-up condition** • Idle speed (More than 140 seconds after starting engine)	Approximately 2.9 - 8.8 V★ 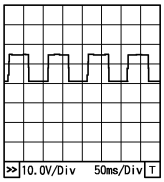 PBIA8148J
53	W	A/F sensor 1 (Bank 2)	**[Engine is running]** • **Warm-up condition** • Engine speed: 2,000 rpm	Approximately 1.8 V Output voltage varies with air fuel ratio.
57	R	A/F sensor 1 (Bank 2)	**[Ignition switch: ON]**	Approximately 2.2 V

★: Average voltage for pulse signal (Actual pulse signal can be confirmed by oscilloscope.)

Diagnosis Procedure

INFOID:0000000005285881

1. CHECK GROUND CONNECTIONS

1. Turn ignition switch OFF.
2. Loosen and retighten ground screws on the body.
   Refer to EC-1251, "Ground Inspection".

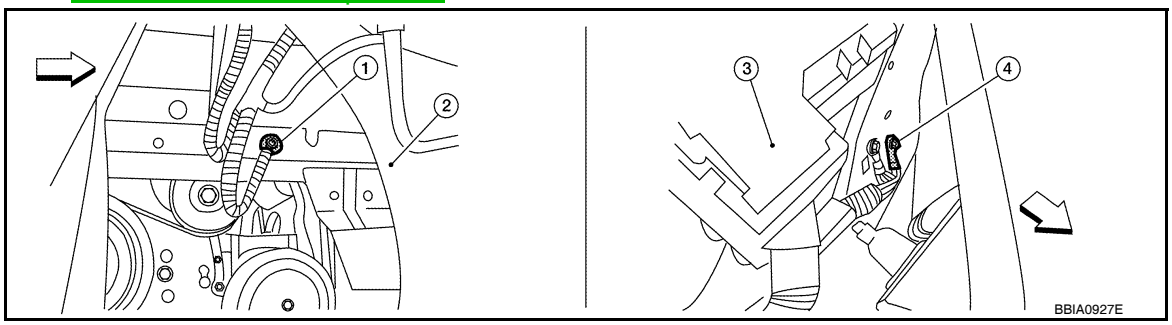

⇦: Vehicle front

1. Body ground E9 (view with front wheel RH and fender protector RH removed.)
2. Washer tank
3. Fuse and fusible link box
4. Body ground E15

OK or NG

OK >> GO TO 2.
NG >> Repair or replace ground connections.

2. CHECK AIR FUEL RATIO (A/F) SENSOR 1 POWER SUPPLY CIRCUIT

1. Disconnect air fuel ratio (A/F) sensor 1 harness connector.
- Air fuel ratio (A/F) sensor 1 (Bank 1) harness connector (1)
- Air fuel ratio (A/F) sensor 1 (Bank 1) (2)
- Air fuel ratio (A/F) sensor 1 (Bank 2) (3)
- Air fuel ratio (A/F) sensor 1 (Bank 2) harness connector (4)
2. Turn ignition switch ON.

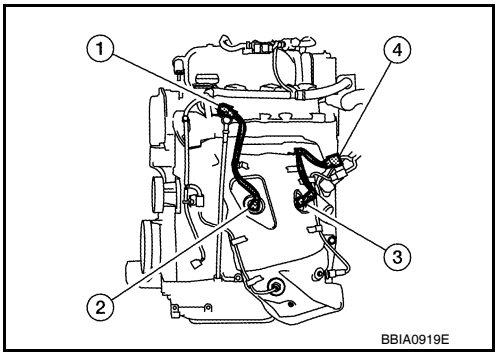

3. Check voltage between A/F sensor 1 terminal 4 and ground with CONSULT-III or tester.

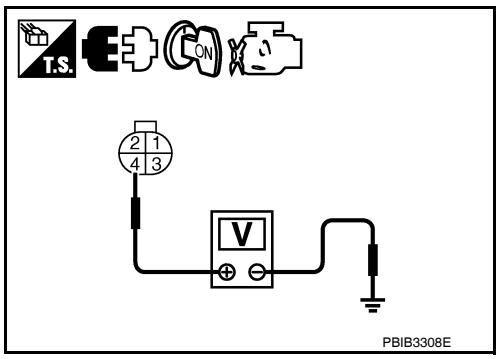

Voltage: Battery voltage

OK or NG

OK >> GO TO 4.
NG >> GO TO 3.

3. DETECT MALFUNCTIONING PART

Check the following.
- Harness connectors E3, F2 (Bank 1)
- Harness connectors E17, F10 (Bank 2)
- Fuse block (J/B) connector E43 (Bank 1)
- Fuse block (J/B) connector E39 (Bank 2)
- 10 A fuse (Bank 1)
- 15 A fuse (Bank 2)
- Harness for open or short between A/F sensor 1 and fuse

>> Repair or replace harness or connectors.

4. CHECK A/F SENSOR 1 INPUT SIGNAL CIRCUIT FOR OPEN AND SHORT

1. Turn ignition switch OFF.
2. Disconnect ECM harness connector.
3. Check harness continuity between the following terminals. Refer to Wiring Diagram.

Bank	A/F sensor 1 terminal	ECM terminal
1	1	45
	2	49
2	1	53
	2	57

Continuity should exist.

4. Check harness continuity between the following terminals and ground. Refer to Wiring Diagram.

Bank 1		Bank 2	
A/F sensor terminal	ECM terminal	A/F sensor terminal	ECM terminal
1	45	1	53
2	49	2	57

Continuity should not exist.

5. Also check harness for short to power.

OK or NG

OK >> GO TO 5.
NG >> Repair open circuit or short to ground or short to power in harness or connectors.

5. CHECK INTERMITTENT INCIDENT

Perform EC-1245.

OK or NG

OK >> GO TO 6.
NG >> Repair or replace.

6. REPLACE AIR FUEL RATIO (A/F) SENSOR 1

Replace malfunctioning air fuel ratio (A/F) sensor 1.

CAUTION:

- **Discard any A/F sensor which has been dropped from a height of more than 0.5 m (19.7 in) onto a hard surface such as a concrete floor; use a new one.**
- **Before installing new A/F sensor, clean exhaust system threads using oxygen sensor thread cleaner [commercial service tool (J-43897-18 or J-43897-12)] and approved anti-seize lubricant (commercial service tool).**

>> **INSPECTION END**

Removal and Installation

INFOID:0000000005285882

AIR FUEL RATIO SENSOR

Refer to EM-140

DTC P0131, P0151 A/F SENSOR 1

Component Description

INFOID:0000000005285883

The air fuel ratio (A/F) sensor 1 is a planar one-cell limit current sensor. The sensor element of the A/F sensor 1 is composed an electrode layer, which transports ions. It has a heater in the element.
The sensor is capable of precise measurement λ = 1, but also in the lean and rich range. Together with its control electronics, the sensor outputs a clear, continuous signal throughout a wide λ range.
The exhaust gas components diffuse through the diffusion layer at the sensor cell. An electrode layer is applied voltage, and this current relative oxygen density in lean. Also this current relative hydrocarbon density in rich.
Therefore, the A/F sensor 1 is able to indicate air fuel ratio by this electrode layer of current. In addition, a heater is integrated in the sensor to ensure the required operating temperature of approximately 800°C (1,472°F).

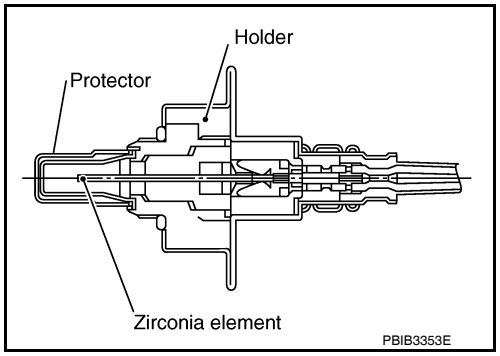

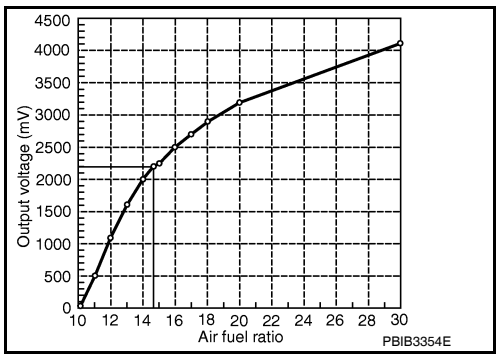

CONSULT-III Reference Value in Data Monitor Mode

INFOID:0000000005285884

Specification data are reference values.

Monitor item	Condition		Specification
A/F SEN1 (B1) A/F SEN1 (B2)	• Engine: After warming up	Maintaining engine speed at 2,000 rpm	Fluctuates around 2.2 V

On Board Diagnosis Logic

INFOID:0000000005285885

To judge the malfunction, the diagnosis checks that the A/F signal computed by ECM from the air fuel ratio (A/F) sensor 1 signal is not inordinately low.

DTC No.	Trouble diagnosis name	DTC detecting condition	Possible Cause
P0131 0131 (Bank 1)	Air fuel ratio (A/F) sensor 1 circuit low voltage	The A/F signal computed by ECM from the A/F sensor 1 signal is constantly approx. 0 V.	• Harness or connectors [Air fuel ratio (A/F) sensor circuit is open or shorted.] • Air fuel ratio (A/F) sensor 1
P0151 0151 (Bank 2)			

DTC Confirmation Procedure

INFOID:0000000005285886

NOTE:
If DTC Confirmation Procedure has been previously conducted, always turn ignition switch OFF and wait at least 10 seconds before conducting the next test.
TESTING CONDITION:
Before performing the following procedure, confirm that battery voltage is more than 10.5 V at idle.

WITH CONSULT-III

1. Start engine and warm it up to normal operating temperature.

2. Select “A/F SEN1 (B1)” or “A/F SEN 1 (B2)” in “DATA MONITOR” mode with CONSULT-III.
3. Check “A/F SEN1 (B1)” or “A/F SEN 1 (B2)” indication.
   If the indication is constantly approx. 0 V, go to EC-1334, "Diagnosis Procedure".
   If the indication is not constantly approx. 0 V, go to next step.
4. Turn ignition switch OFF, wait at least 10 seconds and then restart engine.
5. Drive and accelerate vehicle to more than 40 km/h (25 MPH) within 20 seconds after restarting engine.
6. Maintain the following conditions for approximately 20 consecutive seconds.

ENG SPEED	1,000 - 3,200 rpm
VHCL SPEED SE	More than 40 km/h (25 MPH)
B/FUEL SCHDL	1.5 - 9.0 msec
Selector lever	Suitable position

NOTE:
- **Keep the accelerator pedal as steady as possible during the cruising.**
- **If this procedure is not completed within 1 minute after restarting engine at step 4, return to step 4.**

7. Check 1st trip DTC.
8. If 1st trip DTC is displayed, go to EC-1334, "Diagnosis Procedure".

WITH GST

Follow the procedure “WITH CONSULT-III” above.

Wiring Diagram

INFOID:0000000005285887

BANK 1

EC-AF1B1-01

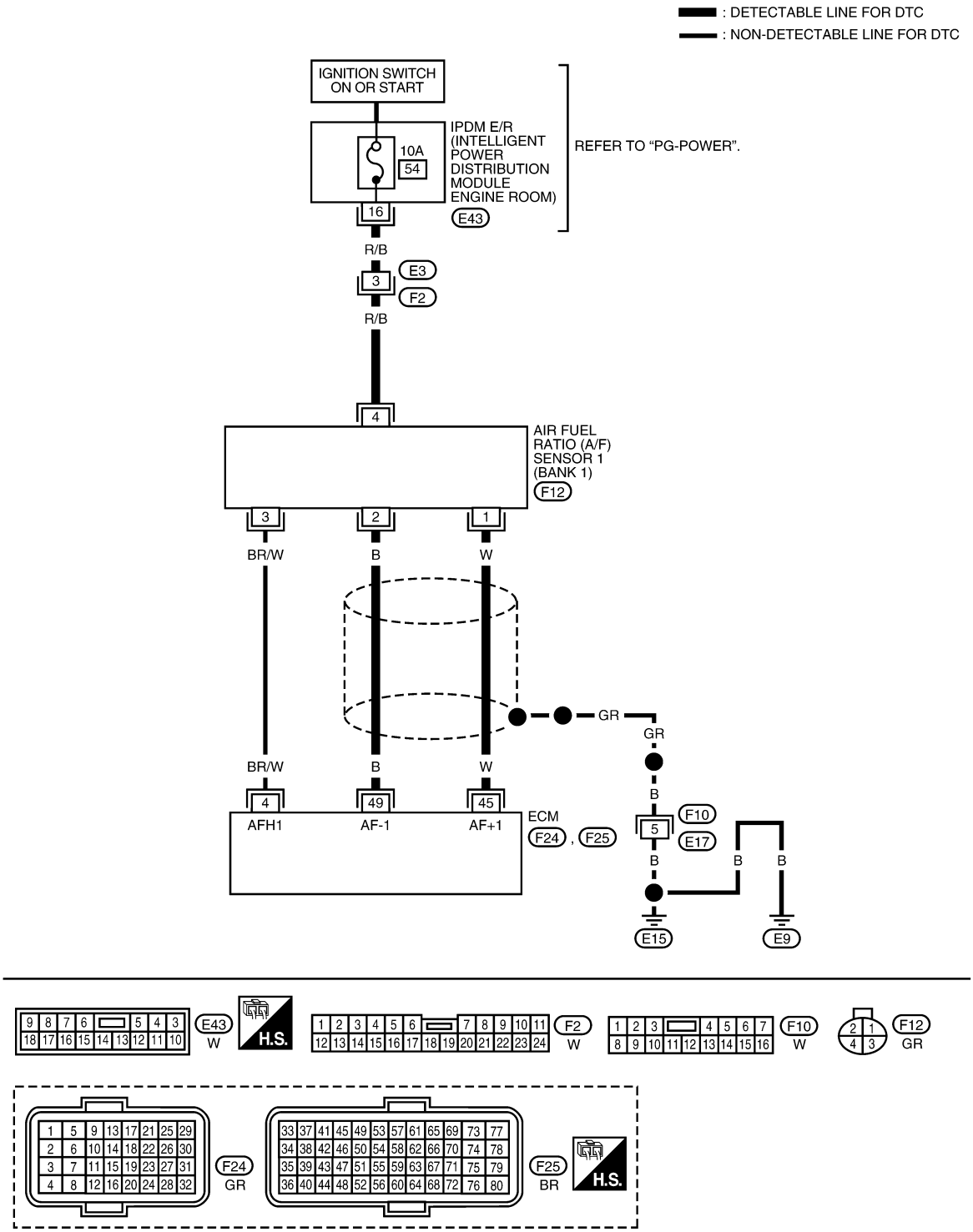

Specification data are reference values and are measured between each terminal and ground.
Pulse signal is measured by CONSULT-III.

CAUTION:

Never use ECM ground terminals when measuring input/output voltage. Doing so may result in damage to the ECM's transistor. Use a ground other than ECM terminals, such as the ground.

TERMINAL NO.	WIRE COLOR	ITEM	CONDITION	DATA (DC Voltage)
4	BR/W	A/F sensor 1 heater (Bank 1)	**[Engine is running]** • **Warm-up condition** • Idle speed (More than 140 seconds after starting engine)	Approximately 2.9 - 8.8 V★ 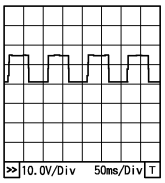 PBIA8148J
45	B	A/F sensor 1 (Bank 1)	**[Engine is running]** • **Warm-up condition** • Engine speed: 2,000 rpm	Approximately 1.8 V Output voltage varies with air fuel ratio.
49	W	A/F sensor 1 (Bank 1)	**[Ignition switch: ON]**	Approximately 2.2 V

★: Average voltage for pulse signal (Actual pulse signal can be confirmed by oscilloscope.)

EC-AF1B2-01

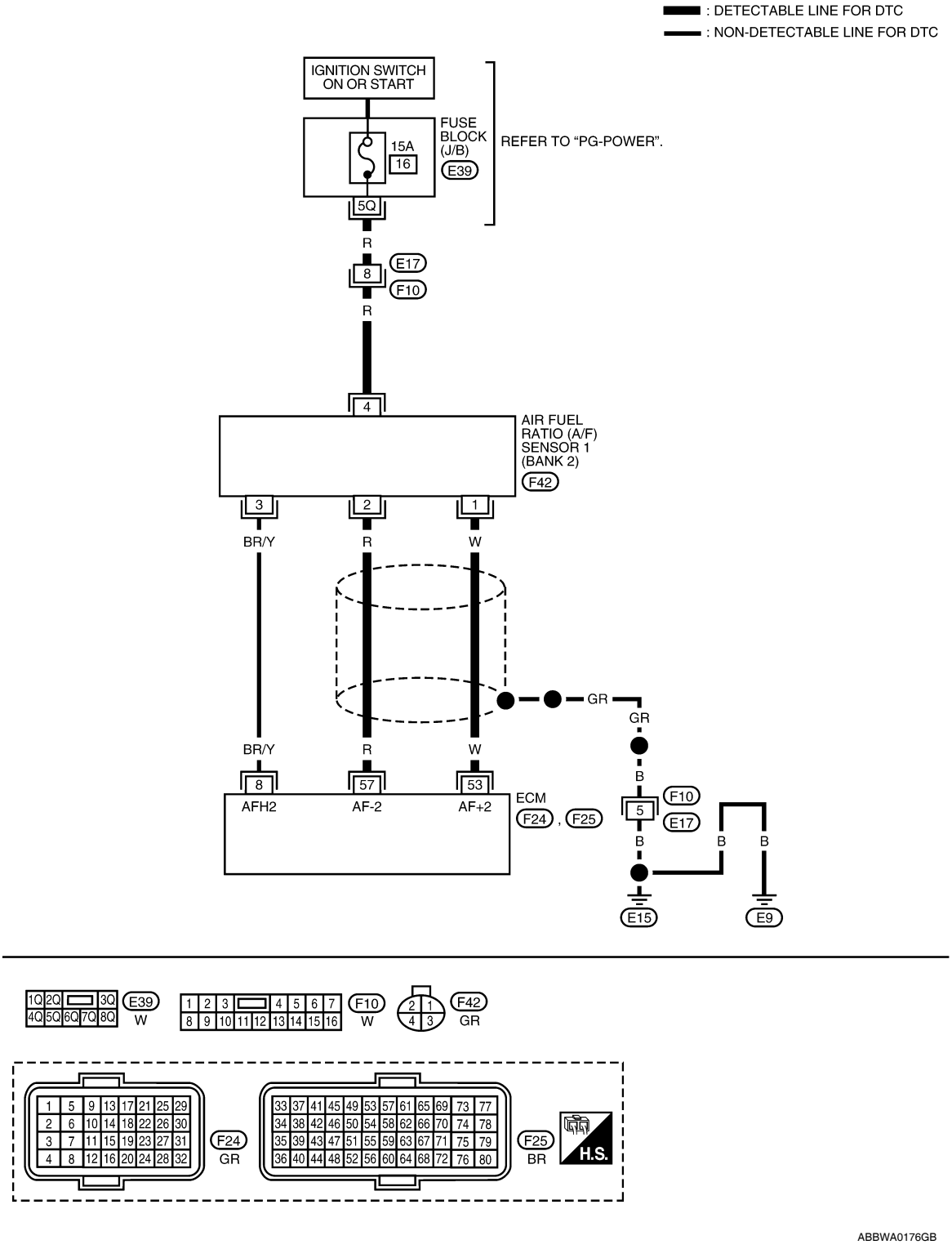

Specification data are reference values and are measured between each terminal and ground.
Pulse signal is measured by CONSULT-III.

CAUTION:

Never use ECM ground terminals when measuring input/output voltage. Doing so may result in damage to the ECM's transistor. Use a ground other than ECM terminals, such as the ground.

TERMINAL NO.	WIRE COLOR	ITEM	CONDITION	DATA (DC Voltage)
8	BR/Y	A/F sensor 1 heater (Bank 2)	**[Engine is running]** • **Warm-up condition** • Idle speed (More than 140 seconds after starting engine)	Approximately 2.9 - 8.8 V★ 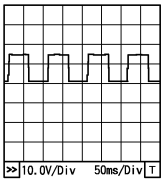 PBIA8148J
53	W	A/F sensor 1 (Bank 2)	**[Engine is running]** • **Warm-up condition** • Engine speed: 2,000 rpm	Approximately 1.8 V Output voltage varies with air fuel ratio.
57	R	A/F sensor 1 (Bank 2)	**[Ignition switch: ON]**	Approximately 2.2 V

★: Average voltage for pulse signal (Actual pulse signal can be confirmed by oscilloscope.)

Diagnosis Procedure

INFOID:0000000005285888

1. CHECK GROUND CONNECTIONS

1. Turn ignition switch OFF.
2. Loosen and retighten ground screws on the body.
   Refer to EC-1251, "Ground Inspection".

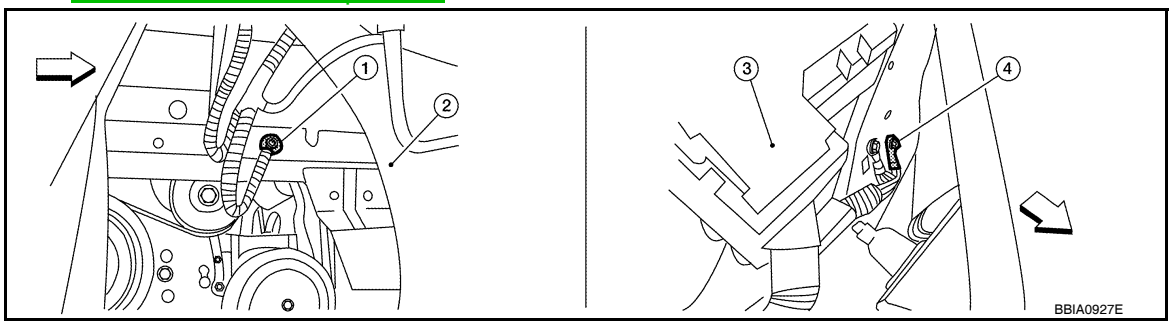

⇦: Vehicle front

1. Body ground E9 (view with front wheel RH and fender protector RH removed.)
2. Washer tank
3. Fuse and fusible link box
4. Body ground E15

OK or NG

OK >> GO TO 2.
NG >> Repair or replace ground connections.

2. CHECK AIR FUEL RATIO (A/F) SENSOR 1 POWER SUPPLY CIRCUIT

1. Disconnect air fuel ratio (A/F) sensor 1 harness connector.
- Air fuel ratio (A/F) sensor 1 (Bank 1) harness connector (1)
- Air fuel ratio (A/F) sensor 1 (Bank 1) (2)
- Air fuel ratio (A/F) sensor 1 (Bank 2) (3)
- Air fuel ratio (A/F) sensor 1 (Bank 2) harness connector (4)
2. Turn ignition switch ON.

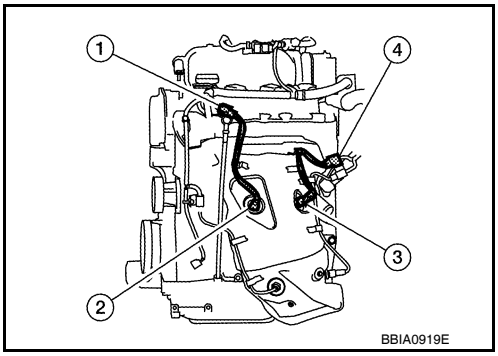

3. Check voltage between A/F sensor 1 terminal 4 and ground with CONSULT-III or tester.

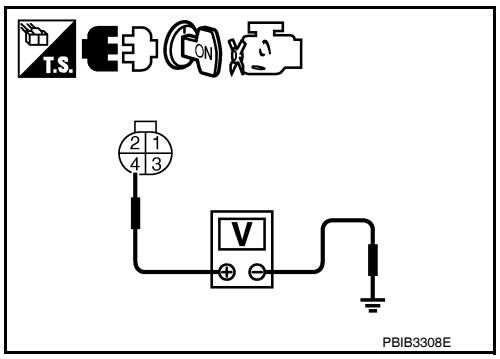

Voltage: Battery voltage

OK or NG

OK >> GO TO 4.
NG >> GO TO 3.

3. DETECT MALFUNCTIONING PART

Check the following.
- Harness connectors E3, F2 (Bank 1)
- Harness connectors E17, F10 (Bank 2)
- Fuse block (J/B) connector E43 (Bank 1)
- Fuse block (J/B) connector E39 (Bank 2)
- 10 A fuse (Bank 1)
- 15 A fuse (Bank 2)
- Harness for open or short between A/F sensor 1 and fuse

>> Repair or replace harness or connectors.

4. CHECK A/F SENSOR 1 INPUT SIGNAL CIRCUIT FOR OPEN AND SHORT

1. Turn ignition switch OFF.
2. Disconnect ECM harness connector.
3. Check harness continuity between the following terminals. Refer to Wiring Diagram.

Bank	A/F sensor 1 terminal	ECM terminal
1	1	45
	2	49
2	1	53
	2	57

Continuity should exist.

4. Check harness continuity between the following terminals and ground. Refer to Wiring Diagram.

Bank 1		Bank 2	
A/F sensor terminal	ECM terminal	A/F sensor terminal	ECM terminal
1	45	1	53
2	49	2	57

Continuity should not exist.

5. Also check harness for short to power.

OK or NG

OK >> GO TO 5.
NG >> Repair open circuit or short to ground or short to power in harness or connectors.

5. CHECK INTERMITTENT INCIDENT

Perform EC-1245.

OK or NG

OK >> GO TO 6.
NG >> Repair or replace.

6. REPLACE AIR FUEL RATIO (A/F) SENSOR 1

Replace malfunctioning air fuel ratio (A/F) sensor 1.

CAUTION:

- **Discard any A/F sensor which has been dropped from a height of more than 0.5 m (19.7 in) onto a hard surface such as a concrete floor; use a new one.**
- **Before installing new A/F sensor, clean exhaust system threads using oxygen sensor thread cleaner [commercial service tool (J-43897-18 or J-43897-12)] and approved anti-seize lubricant (commercial service tool).**

>> **INSPECTION END**

Removal and Installation

INFOID:0000000005285889

AIR FUEL RATIO SENSOR

Refer to EM-140.

DTC P0132, P0152 A/F SENSOR 1

Component Description

INFOID:0000000005285890

The air fuel ratio (A/F) sensor 1 is a planar one-cell limit current sensor. The sensor element of the A/F sensor 1 is composed an electrode layer, which transports ions. It has a heater in the element.
The sensor is capable of precise measurement λ = 1, but also in the lean and rich range. Together with its control electronics, the sensor outputs a clear, continuous signal throughout a wide λ range.
The exhaust gas components diffuse through the diffusion layer at the sensor cell. An electrode layer is applied voltage, and this current relative oxygen density in lean. Also this current relative hydrocarbon density in rich.
Therefore, the A/F sensor 1 is able to indicate air fuel ratio by this electrode layer of current. In addition, a heater is integrated in the sensor to ensure the required operating temperature of approximately 800°C (1,472°F).

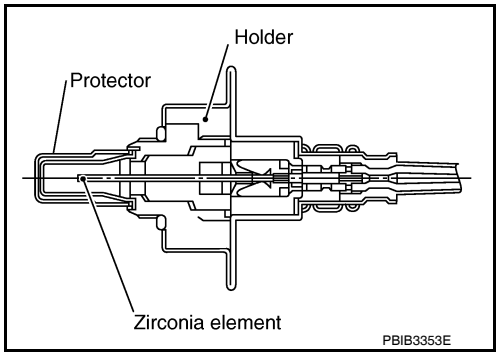

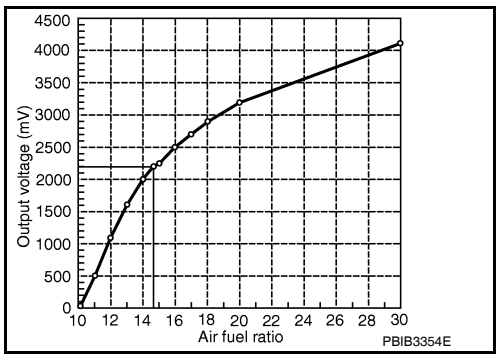

CONSULT-III Reference Value in Data Monitor Mode

INFOID:0000000005285891

Specification data are reference values.

Monitor item	Condition		Specification
A/F SEN1 (B1) A/F SEN1 (B2)	• Engine: After warming up	Maintaining engine speed at 2,000 rpm	Fluctuates around 2.2 V

On Board Diagnosis Logic

INFOID:0000000005285892

To judge the malfunction, the diagnosis checks that the A/F signal computed by ECM from the air fuel ratio (A/F) sensor 1 signal is not inordinately high.

DTC No.	Trouble diagnosis name	DTC detecting condition	Possible Cause
P0132 0132 (Bank 1)	Air fuel ratio (A/F) sensor 1 circuit high voltage	The A/F signal computed by ECM from the A/F sensor 1 signal is constantly approx. 5 V.	• Harness or connectors [Air fuel ratio (A/F) sensor circuit is open or shorted.] • Air fuel ratio (A/F) sensor 1
P0152 0152 (Bank 2)			

DTC Confirmation Procedure

INFOID:0000000005285893

NOTE:
If DTC Confirmation Procedure has been previously conducted, always turn ignition switch OFF and wait at least 10 seconds before conducting the next test.
TESTING CONDITION:
Before performing the following procedure, confirm that battery voltage is more than 10.5 V at idle.

WITH CONSULT-III

1. Start engine and warm it up to normal operating temperature.

2. Select “A/F SEN1 (B1)” or “A/F SEN 1 (B2)” in “DATA MONITOR” mode with CONSULT-III.
3. Check “A/F SEN1 (B1)” or “A/F SEN 1 (B2)” indication.
   If the indication is constantly approx. 5 V, go to EC-1342, "Diagnosis Procedure".
   If the indication is not constantly approx. 5 V, go to next step.
4. Turn ignition switch OFF, wait at least 10 seconds and then restart engine.
5. Drive and accelerate vehicle to more than 40 km/h (25 MPH) within 20 seconds after restarting engine.
6. Maintain the following conditions for approximately 20 consecutive seconds.

ENG SPEED	1,000 - 3,200 rpm
VHCL SPEED SE	More than 40 km/h (25 MPH)
B/FUEL SCHDL	1.5 - 9.0 msec
Selector lever	Suitable position

NOTE:
- **Keep the accelerator pedal as steady as possible during the cruising.**
- **If this procedure is not completed within 1 minute after restarting engine at step 4, return to step 4.**

7. Check 1st trip DTC.
8. If 1st trip DTC is displayed, go to EC-1342, "Diagnosis Procedure".

WITH GST

Follow the procedure “WITH CONSULT-III” above.

Wiring Diagram

INFOID:0000000005285894

BANK 1

EC-AF1B1-01

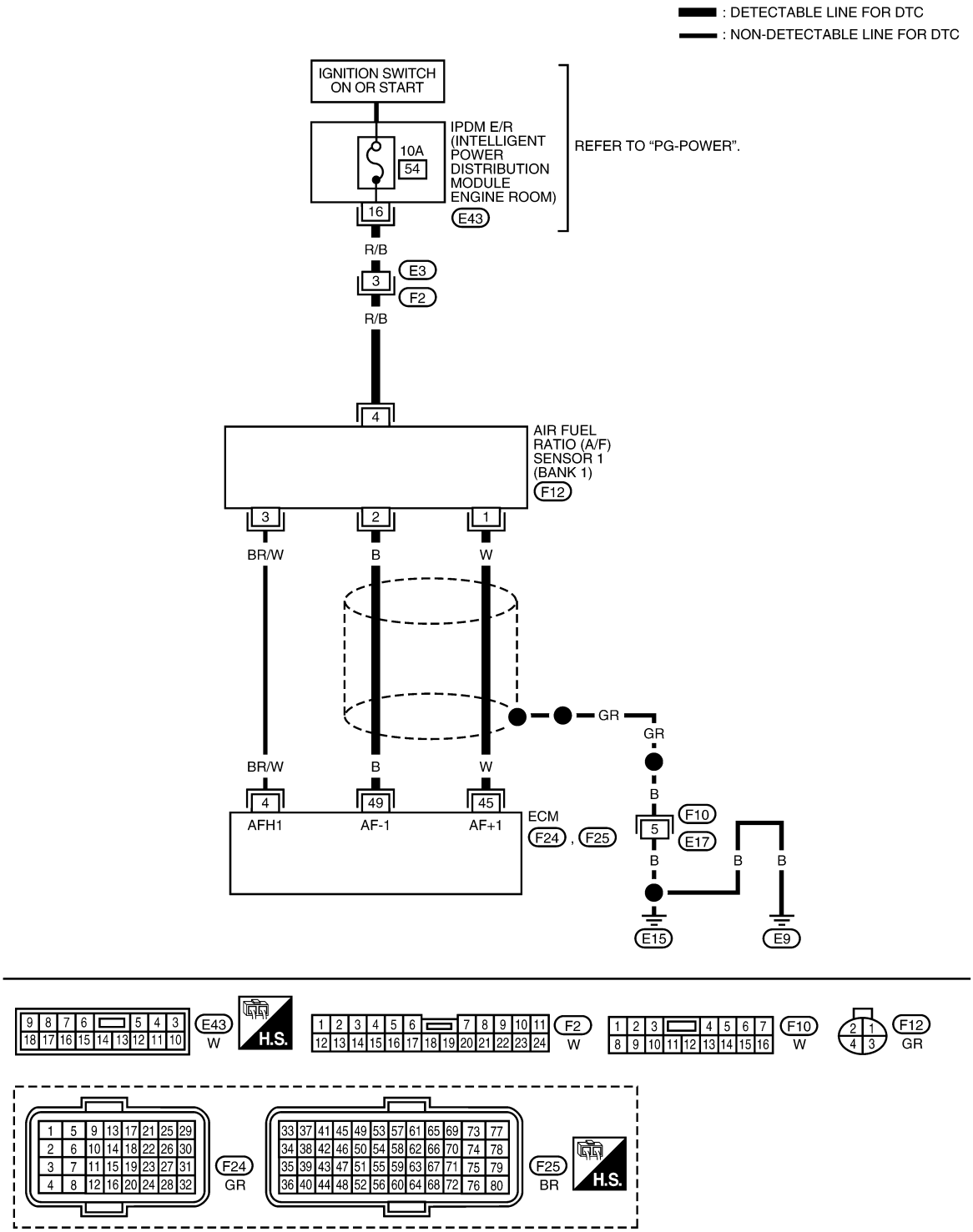

Specification data are reference values and are measured between each terminal and ground.
Pulse signal is measured by CONSULT-III.

CAUTION:

Never use ECM ground terminals when measuring input/output voltage. Doing so may result in damage to the ECM's transistor. Use a ground other than ECM terminals, such as the ground.

TERMINAL NO.	WIRE COLOR	ITEM	CONDITION	DATA (DC Voltage)
4	BR/W	A/F sensor 1 heater (Bank 1)	**[Engine is running]** • **Warm-up condition** • Idle speed (More than 140 seconds after starting engine)	Approximately 2.9 - 8.8 V★ 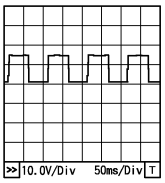 PBIA8148J
45	W	A/F sensor 1 (Bank 1)	**[Engine is running]** • **Warm-up condition** • Engine speed: 2,000 rpm	Approximately 1.8 V Output voltage varies with air fuel ratio.
49	B	A/F sensor 1 (Bank 1)	**[Ignition switch: ON]**	Approximately 2.2 V

★: Average voltage for pulse signal (Actual pulse signal can be confirmed by oscilloscope.)

EC-AF1B2-01

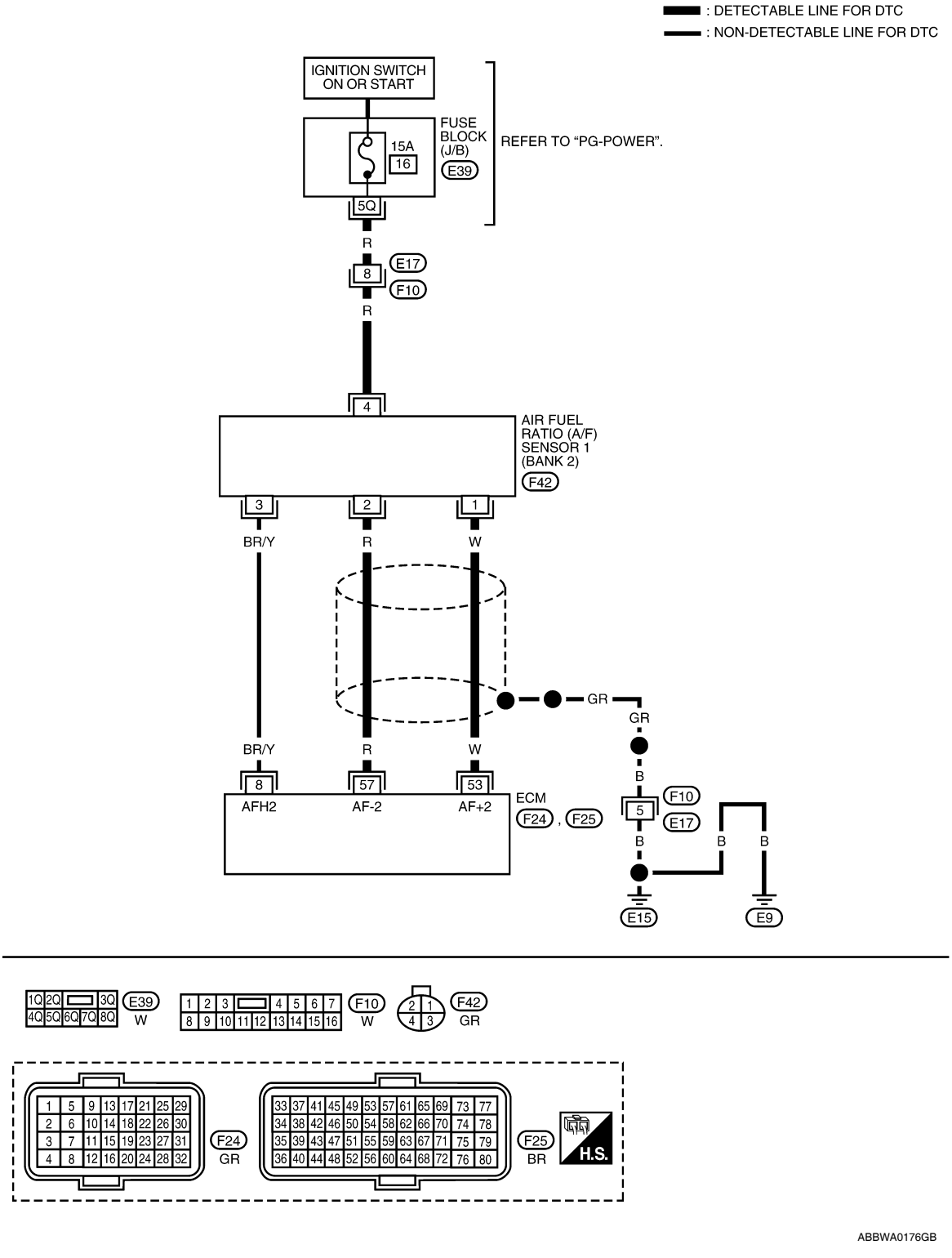

Specification data are reference values and are measured between each terminal and ground.
Pulse signal is measured by CONSULT-III.

CAUTION:

Never use ECM ground terminals when measuring input/output voltage. Doing so may result in damage to the ECM's transistor. Use a ground other than ECM terminals, such as the ground.

TERMINAL NO.	WIRE COLOR	ITEM	CONDITION	DATA (DC Voltage)
8	BR/Y	A/F sensor 1 heater (Bank 2)	**[Engine is running]** • **Warm-up condition** • Idle speed (More than 140 seconds after starting engine)	Approximately 2.9 - 8.8 V★ 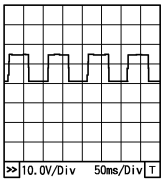 PBIA8148J
53	W	A/F sensor 1 (Bank 2)	**[Engine is running]** • **Warm-up condition** • Engine speed: 2,000 rpm	Approximately 1.8 V Output voltage varies with air fuel ratio.
57	R	A/F sensor 1 (Bank 2)	**[Ignition switch: ON]**	Approximately 2.2 V

★: Average voltage for pulse signal (Actual pulse signal can be confirmed by oscilloscope.)

Diagnosis Procedure

INFOID:0000000005285895

1. CHECK GROUND CONNECTIONS

1. Turn ignition switch OFF.
2. Loosen and retighten three ground screws on the body.
   Refer to EC-1251, "Ground Inspection".

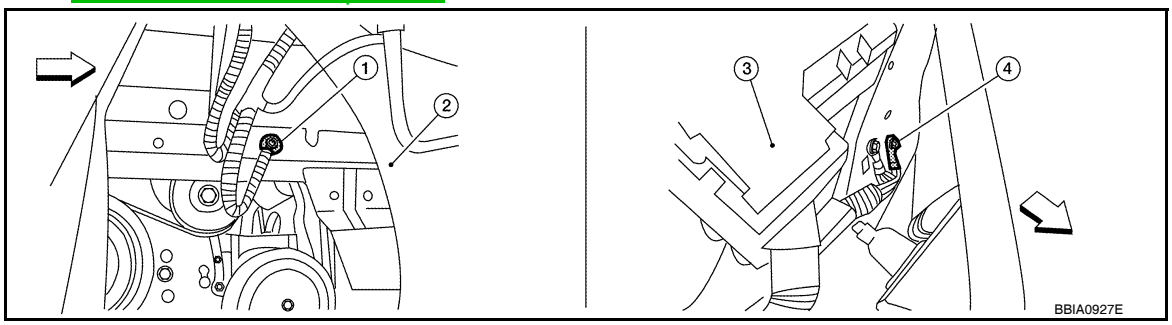

⇦: Vehicle front

1. Body ground E9 (view with front wheel RH and fender protector RH removed.)
2. Washer tank
3. Fuse and fusible link box
4. Body ground E15

OK or NG

OK >> GO TO 2.
NG >> Repair or replace ground connections.

2. CHECK AIR FUEL RATIO (A/F) SENSOR 1 POWER SUPPLY CIRCUIT

1. Disconnect air fuel ratio (A/F) sensor 1 harness connector.
- Air fuel ratio (A/F) sensor 1 (Bank 1) harness connector (1)
- Air fuel ratio (A/F) sensor 1 (Bank 1) (2)
- Air fuel ratio (A/F) sensor 1 (Bank 2) (3)
- Air fuel ratio (A/F) sensor 1 (Bank 2) harness connector (4)
2. Turn ignition switch ON.

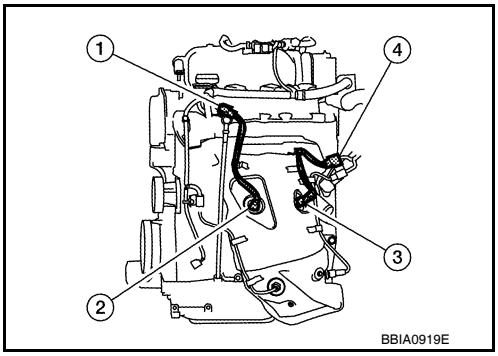

3. Check voltage between A/F sensor 1 terminal 4 and ground with CONSULT-III or tester.

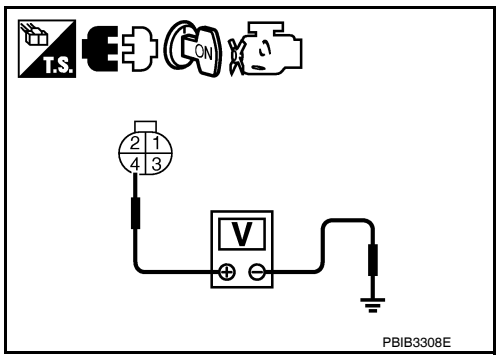

Voltage: Battery voltage

OK or NG

OK >> GO TO 4.
NG >> GO TO 3.

3. DETECT MALFUNCTIONING PART

Check the following.
- Harness connectors E3, F2 (Bank 1)
- Harness connectors E17, F10 (Bank 2)
- Fuse block (J/B) connector E43 (Bank 1)
- Fuse block (J/B) connector E39 (Bank 2)
- 10 A fuse (Bank 1)
- 15 A fuse (Bank 2)
- Harness for open or short between A/F sensor 1 and fuse

>> Repair or replace harness or connectors.

4. CHECK A/F SENSOR 1 INPUT SIGNAL CIRCUIT FOR OPEN AND SHORT

1. Turn ignition switch OFF.
2. Disconnect ECM harness connector.
3. Check harness continuity between the following terminals. Refer to Wiring Diagram.

Bank	A/F sensor 1 terminal	ECM terminal
1	1	45
	2	49
2	1	53
	2	57

Continuity should exist.

4. Check harness continuity between the following terminals and ground. Refer to Wiring Diagram.

Bank 1		Bank 2	
A/F sensor terminal	ECM terminal	A/F sensor terminal	ECM terminal
1	45	1	53
2	49	2	57

Continuity should not exist.

5. Also check harness for short to power.

OK or NG

OK >> GO TO 5.
NG >> Repair open circuit or short to ground or short to power in harness or connectors.

5. CHECK INTERMITTENT INCIDENT

Perform EC-1245.

OK or NG

OK >> GO TO 6.
NG >> Repair or replace.

6. REPLACE AIR FUEL RATIO (A/F) SENSOR 1

Replace malfunctioning air fuel ratio (A/F) sensor 1.

CAUTION:

- **Discard any A/F sensor which has been dropped from a height of more than 0.5 m (19.7 in) onto a hard surface such as a concrete floor; use a new one.**
- **Before installing new A/F sensor, clean exhaust system threads using oxygen sensor thread cleaner [commercial service tool (J-43897-18 or J-43897-12)] and approved anti-seize lubricant (commercial service tool).**

>> **INSPECTION END**

Removal and Installation

INFOID:0000000005285896

AIR FUEL RATIO SENSOR

Refer to EM-23.

DTC P0133, P0153 A/F SENSOR 1

Component Description

INFOID:0000000005285897

The air fuel ratio (A/F) sensor 1 is a planar one-cell limit current sensor. The sensor element of the A/F sensor 1 is composed an electrode layer, which transports ions. It has a heater in the element.
The sensor is capable of precise measurement λ = 1, but also in the lean and rich range. Together with its control electronics, the sensor outputs a clear, continuous signal throughout a wide λ range.
The exhaust gas components diffuse through the diffusion layer at the sensor cell. An electrode layer is applied voltage, and this current relative oxygen density in lean. Also this current relative hydrocarbon density in rich.
Therefore, the A/F sensor 1 is able to indicate air fuel ratio by this electrode layer of current. In addition, a heater is integrated in the sensor to ensure the required operating temperature of approximately 800°C (1,472°F).

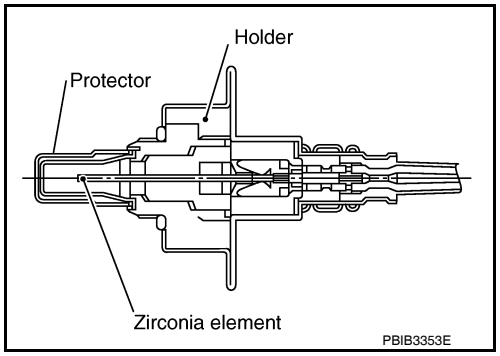

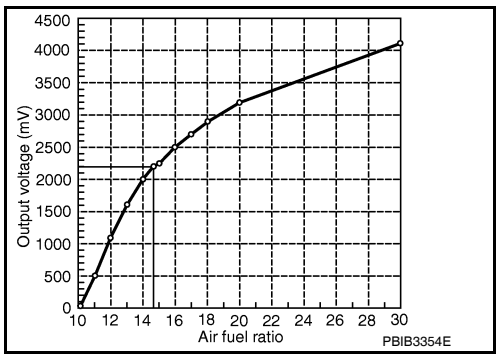

CONSULT-III Reference Value in Data Monitor Mode

INFOID:0000000005285898

Specification data are reference values.

Monitor item	Condition		Specification
A/F SEN1 (B1) A/F SEN1 (B2)	• Engine: After warming up	Maintaining engine speed at 2,000 rpm	Fluctuates around 2.2 V

On Board Diagnosis Logic

INFOID:0000000005285899

To judge the malfunction of air fuel ratio (A/F) sensor 1, this diagnosis measures response time of the A/F signal computed by ECM from the air fuel ratio (A/F) sensor 1 signal. The time is compensated by engine operating (speed and load), fuel feedback control constant, and the air fuel ratio (A/F) sensor 1 temperature index. Judgment is based on whether the compensated time (the A/F sensor 1 signal cycling time index) is inordinately long or not.

DTC No.	Trouble diagnosis name	DTC detecting condition	Possible Cause
P0133 0133 (Bank 1)	Air fuel ratio (A/F) sensor 1 circuit slow response	The response of the A/F signal computed by ECM from A/F sensor 1 signal takes more than the specified time.	• Harness or connectors [Air fuel ratio (A/F) sensor circuit is open or shorted.] • Air fuel ratio (A/F) sensor 1 • Air fuel ratio (A/F) sensor heater 1 • Fuel pressure • Fuel injector • Intake air leaks • Exhaust gas leaks • PCV valve • Mass air flow sensor
P0153 0153 (Bank 2)			

DTC Confirmation Procedure

INFOID:0000000005285900

NOTE:

If DTC Confirmation Procedure has been previously conducted, always turn ignition switch OFF and wait at least 10 seconds before conducting the next test.

TESTING CONDITION:

Before performing the following procedure, confirm that battery voltage is more than 11 V at idle.

WITH CONSULT-III

1. Start engine and warm it up to normal operating temperature.
2. Turn ignition switch OFF and wait at least 10 seconds.
3. Start engine and keep the engine speed between 3,500 and 4,000 rpm for at least 1minute under no load.
4. Let engine idle for 1 minute.
5. Select “A/F SEN1 (B1) P1278/P1279” (for DTC P0133) or “A/F SEN1 (B2) P1288/P1289” (for DTC P0153) of “A/F SEN1” in “DTC WORK SUPPORT” mode with CONSULT-III.
6. Touch “START”.
   If “COMPLETED” appears on CONSULT-III screen, go to step 10.
   If “COMPLETED” does not appear on CONSULT-III screen, go to the following step.
7. After perform the following procedure, “TESTING” will be displayed on the CONSULT-III screen.

a. Increase the engine speed up to between 4,000 to 5,000 rpm and maintain that speed for 10 seconds.

b. Fully release accelerator pedal and then let engine idle for approximately 10 seconds.
   If “TESTING” is not displayed after 10 seconds, refer to EC-1237.

8. Wait for approximately 20 seconds at idle under the condition that “TESTING” is displayed on the CONSULT-III screen.
9. Check that “TESTING” changes to “COMPLETED”.
   If “TESTING” changed to “OUT OF CONDITION”, refer to EC-1237.
10. Check that “OK” is displayed after touching “SELF-DIAG RESULTS”.
    If “NG” is displayed, go to EC-1350, "Diagnosis Procedure".

WITH GST

1. Start engine and warm it up to normal operating temperature.
2. Select Service $01 with GST.
3. Calculate the total value of “Short-term fuel trim” and “Long-term fuel trim” indications.
   Check that the total percentage should be within ± 15%.
   If OK, go to the following step.
   If NG, check the following.
   - Intake air leaks
   - Exhaust gas leaks
   - Incorrect fuel pressure
   - Lack of fuel
   - Fuel injector
   - Incorrect PCV hose connection
   - PCV valve
   - Mass air flow sensor
4. Turn ignition switch OFF and wait at least 10 seconds.
5. Start engine and keep the engine speed between 3,500 and 4,000 rpm for at least 1minute under no load.
6. Let engine idle for 1 minute.
7. Increase the engine speed up to between 4,000 to 5,000 rpm and maintain that speed for 10 seconds.
8. Fully release accelerator pedal and then let engine idle for approximately 1 minute.
9. Select Service $07 with GST.
   If 1st trip DTC is detected, go to EC-1350, "Diagnosis Procedure".

Wiring Diagram

INFOID:0000000005285901

BANK 1

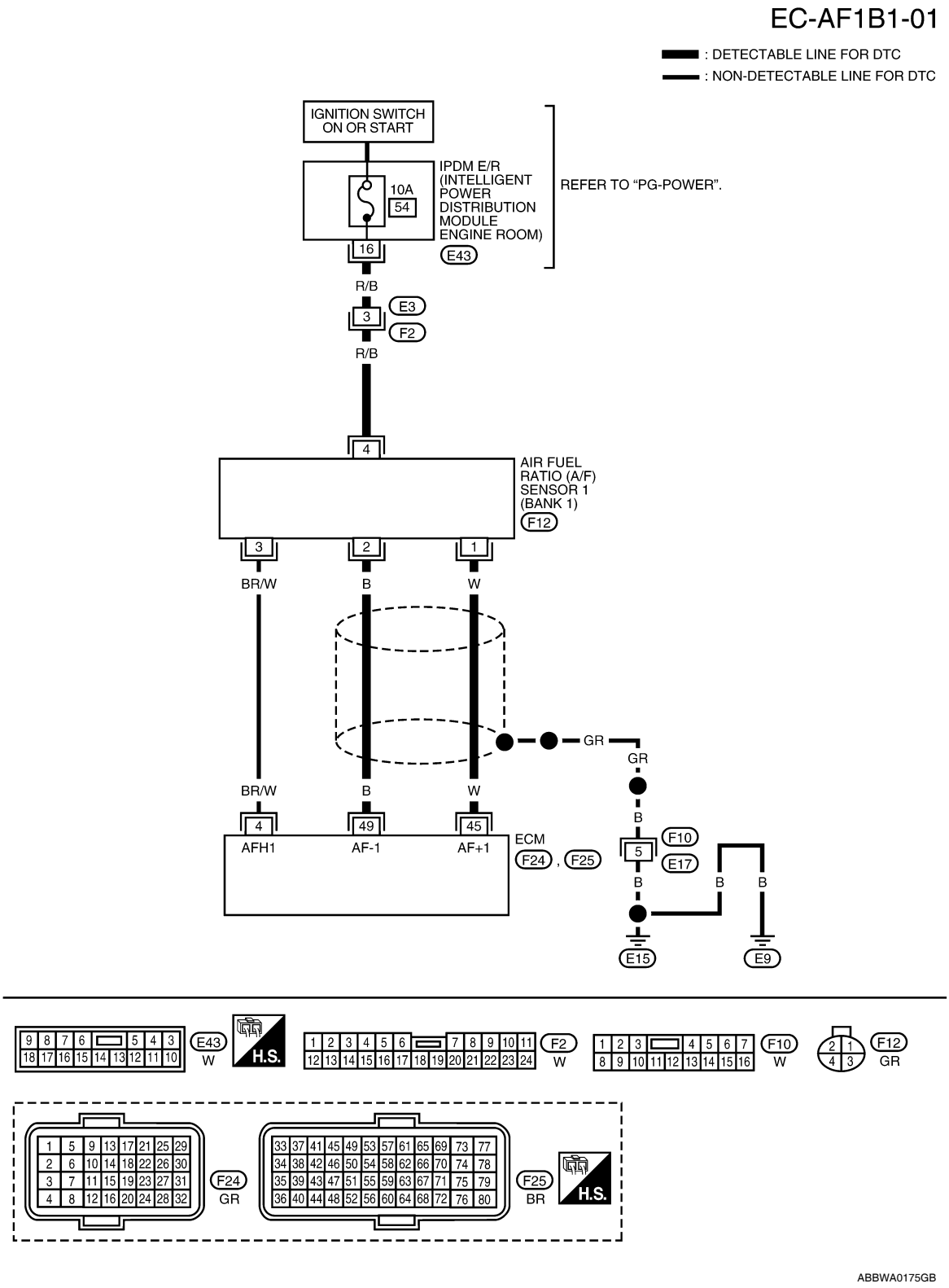

Specification data are reference values and are measured between each terminal and ground.
Pulse signal is measured by CONSULT-III.

CAUTION:

Never use ECM ground terminals when measuring input/output voltage. Doing so may result in damage to the ECM's transistor. Use a ground other than ECM terminals, such as the ground.

TERMINAL NO.	WIRE COLOR	ITEM	CONDITION	DATA (DC Voltage)
4	BR/W	A/F sensor 1 heater (Bank 1)	**[Engine is running]** • **Warm-up condition** • Idle speed (More than 140 seconds after starting engine)	Approximately 2.9 - 8.8 V★ 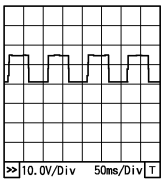 PBIA8148J
45	W	A/F sensor 1 (Bank 1)	**[Engine is running]** • **Warm-up condition** • Engine speed: 2,000 rpm	Approximately 1.8 V Output voltage varies with air fuel ratio.
49	B	A/F sensor 1 (Bank 1)	**[Ignition switch: ON]**	Approximately 2.2 V

★: Average voltage for pulse signal (Actual pulse signal can be confirmed by oscilloscope.)

EC-AF1B2-01

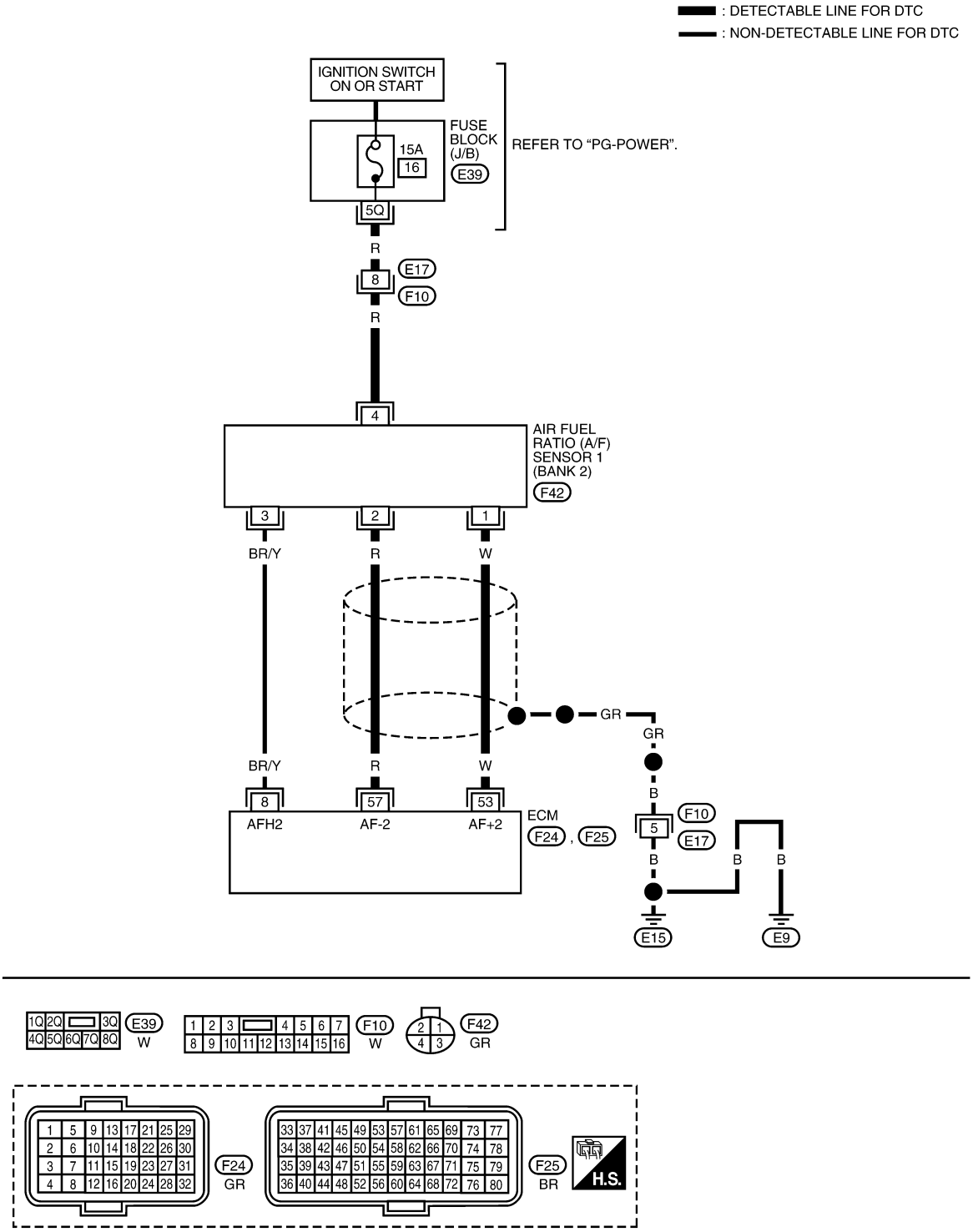

Specification data are reference values and are measured between each terminal and ground.
Pulse signal is measured by CONSULT-III.

CAUTION:

Never use ECM ground terminals when measuring input/output voltage. Doing so may result in damage to the ECM's transistor. Use a ground other than ECM terminals, such as the ground.

TERMINAL NO.	WIRE COLOR	ITEM	CONDITION	DATA (DC Voltage)
8	BR/Y	A/F sensor 1 heater (Bank 2)	**[Engine is running]** • **Warm-up condition** • Idle speed (More than 140 seconds after starting engine)	Approximately 2.9 - 8.8 V★ 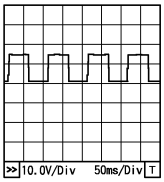 PBIA8148J
53	W	A/F sensor 1 (Bank 2)	**[Engine is running]** • **Warm-up condition** • Engine speed: 2,000 rpm	Approximately 1.8 V Output voltage varies with air fuel ratio.
57	R	A/F sensor 1 (Bank 2)	**[Ignition switch: ON]**	Approximately 2.2 V

★: Average voltage for pulse signal (Actual pulse signal can be confirmed by oscilloscope.)

Diagnosis Procedure

INFOID:0000000005285902

1. CHECK GROUND CONNECTIONS

1. Turn ignition switch OFF.
2. Loosen and retighten engine screws on the body.
   Refer to EC-1251, "Ground Inspection".

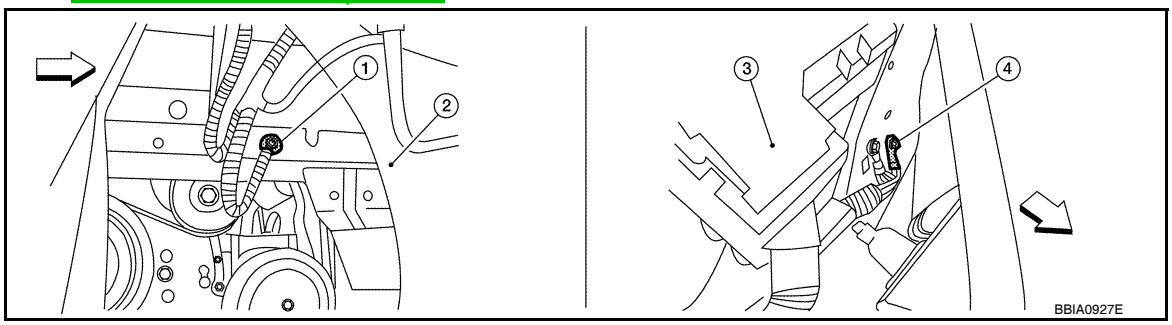

⇦: Vehicle front

1. Body ground E9 (view with front wheel RH and fender protector RH removed.)
2. Washer tank
3. Fuse and fusible link box
4. Body ground E15

OK or NG

OK >> GO TO 2.
NG >> Repair or replace ground connections.

2. RETIGHTEN AIR FUEL RATIO (A/F) SENSOR 1

Loosen and retighten the air fuel ratio (A/F) sensor 1. Refer to EM-140, "Removal and Installation".
- Air fuel ratio (A/F) sensor 1 (Bank 1) harness connector (1)
- Air fuel ratio (A/F) sensor 1 (Bank 1) (2)
- Air fuel ratio (A/F) sensor 1 (Bank 2) (3)
- Air fuel ratio (A/F) sensor 1 (Bank 2) harness connector (4)

>> GO TO 3.

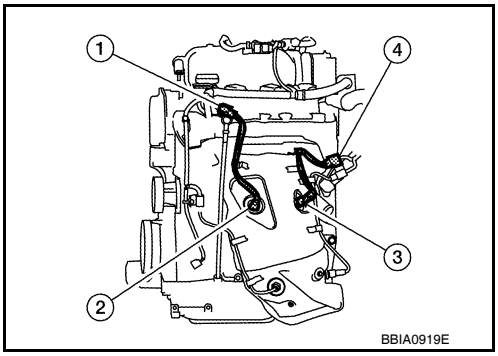

3. CHECK EXHAUST GAS LEAK

1. Start engine and run it at idle.
2. Listen for an exhaust gas leak before three way catalyst (manifold).

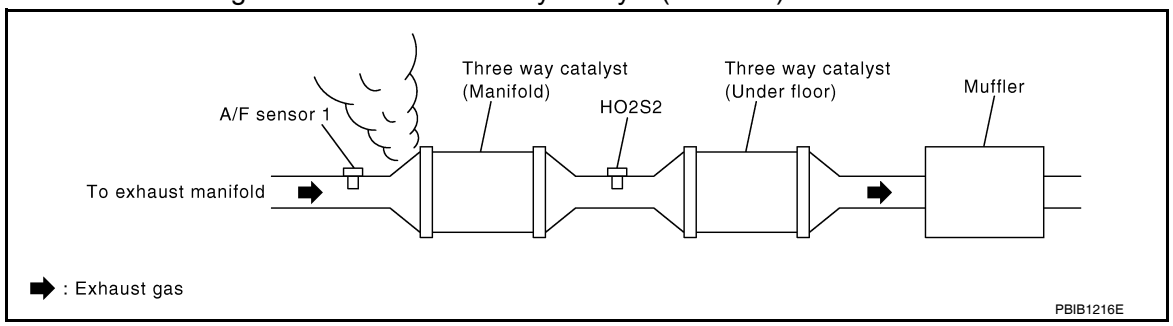

OK or NG

OK >> GO TO 4.
NG >> Repair or replace.

4. CHECK FOR INTAKE AIR LEAK

Listen for an intake air leak after the mass air flow sensor.

OK or NG

OK >> GO TO 5.
NG >> Repair or replace.

5. CLEAR THE SELF-LEARNING DATA

With CONSULT-III

1. Start engine and warm it up to normal operating temperature.
2. Select “SELF-LEARNING CONT” in “WORK SUPPORT” mode with CONSULT-III.
3. Clear the self-learning control coefficient by touching “CLEAR” or “START”.
4. Run engine for at least 10 minutes at idle speed.
   Is the 1st trip DTC P0171, P0172, P0174 or P0175 detected? Is it difficult to start engine?

Without CONSULT-III

1. Start engine and warm it up to normal operating temperature.
2. Turn ignition switch OFF.
3. Disconnect mass air flow sensor (1) harness connector, and restart and run engine for at least 5 seconds at idle speed.

- ⇦: Vehicle front

4. Stop engine and reconnect mass air flow sensor harness connector.
5. Check that DTC P0102 is displayed.
6. Erase the DTC memory. Refer to EC-1155, "Emission-related Diagnostic Information".
7. Check that DTC P0000 is displayed.
8. Run engine for at least 10 minutes at idle speed.
   Is the 1st trip DTC P0171, P0172, P0174 or P0175 detected? Is it difficult to start engine?

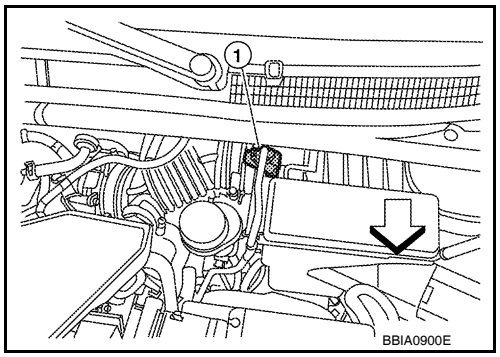

Yes or No

Yes >> Perform trouble diagnosis for DTC P0171, P0174 or P0172, P0175. Refer to EC-275 or EC-281.
No >> GO TO 6.

6. CHECK AIR FUEL RATIO (A/F) SENSOR 1 POWER SUPPLY CIRCUIT

1. Turn ignition switch OFF.

2. Disconnect air fuel ratio (A/F) sensor 1 harness connector.
- Air fuel ratio (A/F) sensor 1 (Bank 1) harness connector (1)
- Air fuel ratio (A/F) sensor 1 (Bank 1) (2)
- Air fuel ratio (A/F) sensor 1 (Bank 2) (3)
- Air fuel ratio (A/F) sensor 1 (Bank 2) harness connector (4)
3. Turn ignition switch ON.

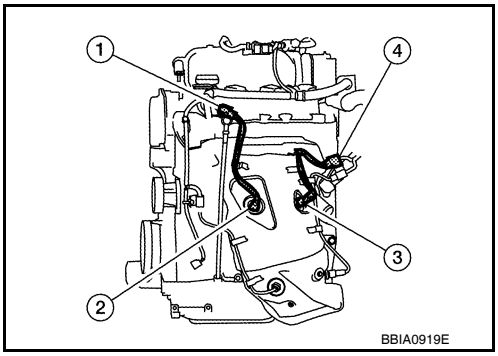

4. Check voltage between A/F sensor 1 terminal 4 and ground with CONSULT-III or tester.

Voltage: Battery voltage

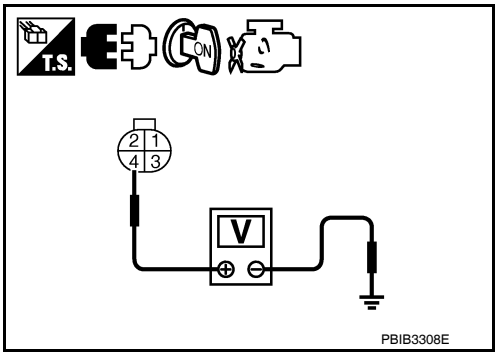

OK or NG

OK >> GO TO 8.
NG >> GO TO 7.

7. DETECT MALFUNCTIONING PART

Check the following.
- Harness connectors E3, F2 (Bank 1)
- Harness connectors E17, F10 (Bank 2)
- Fuse block (J/B) connector E43 (Bank 1)
- Fuse block (J/B) connector E39 (Bank 2)
- 10 A fuse (Bank 1)
- 15 A fuse (Bank 2)
- Harness for open or short between A/F sensor 1 and fuse

>> Repair or replace harness or connectors.

8. CHECK A/F SENSOR 1 INPUT SIGNAL CIRCUIT FOR OPEN AND SHORT

1. Turn ignition switch OFF.
2. Disconnect ECM harness connector.
3. Check harness continuity between the following terminals. Refer to Wiring Diagram.

Bank	A/F sensor 1 terminal	ECM terminal
1	1	45
	2	49
2	1	53
	2	57

Continuity should exist.

4. Check harness continuity between the following terminals and ground. Refer to Wiring Diagram.

Bank 1		Bank 2	
A/F sensor terminal	ECM terminal	A/F sensor terminal	ECM terminal
1	45	1	53
2	49	2	57

Continuity should not exist.

5. Also check harness for short to power.

OK or NG

OK >> GO TO 9.
NG >> Repair open circuit or short to ground or short to power in harness or connectors.

9. CHECK AIR FUEL RATIO (A/F) SENSOR 1 HEATER

Refer to EC-1267, "Component Inspection".

OK or NG

OK >> GO TO 10.
NG >> GO TO 13.

10. CHECK MASS AIR FLOW SENSOR

Refer to EC-1287, "Component Inspection".

OK or NG

OK >> GO TO 11.
NG >> Replace mass air flow sensor.

11. CHECK PCV VALVE

Refer to EC-1151, "Component Inspection".

OK or NG

OK >> GO TO 12.
NG >> Repair or replace PCV valve.

12. CHECK INTERMITTENT INCIDENT

Perform EC-1245.

OK or NG

OK >> GO TO 13.
NG >> Repair or replace.

13. REPLACE AIR FUEL RATIO (A/F) SENSOR 1

Replace malfunctioning air fuel ratio (A/F) sensor 1.

CAUTION:

- **Discard any A/F sensor which has been dropped from a height of more than 0.5 m (19.7 in) onto a hard surface such as a concrete floor; use a new one.**
- **Before installing new A/F sensor, clean exhaust system threads using oxygen sensor thread cleaner [commercial service tool (J-43897-18 or J-43897-12)] and approved anti-seize lubricant (commercial service tool).**

>> **INSPECTION END**

Removal and Installation

INFOID:0000000005285903

AIR FUEL RATIO SENSOR

Refer to EM-140.

DTC P0137, P0157 HO2S2

Component Description

INFOID:0000000005285904

The heated oxygen sensor 2, after three way catalyst (manifold), monitors the oxygen level in the exhaust gas on each bank.
Even if switching characteristics of the air fuel ratio (A/F) sensor 1 are shifted, the air/fuel ratio is controlled to stoichiometric, by the signal from the heated oxygen sensor 2.
This sensor is made of ceramic zirconia. The zirconia generates voltage from approximately 1 V in richer conditions to 0 V in leaner conditions.
Under normal conditions the heated oxygen sensor 2 is not used for engine control operation.

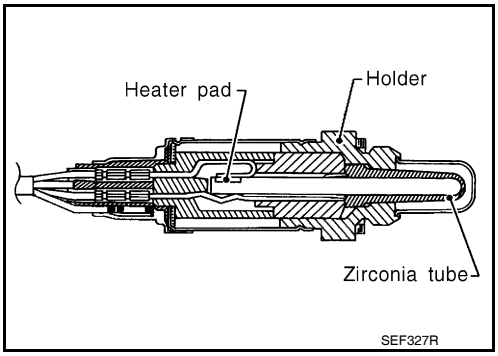

CONSULT-III Reference Value in Data Monitor Mode

INFOID:0000000005285905

Specification data are reference values.

Monitor item	Condition	Specification
HO2S2 (B1) HO2S2 (B2)	• Revving engine from idle to 3,000 rpm quickly after the following conditions are met - Engine: After warming up - Keeping the engine speed between 3,500 and 4,000 rpm for 1 minute and at idle for 1 minute under no load	0 - 0.3 V ←→ Approx. 0.6 - 1.0 V
HO2S2 MNTR (B1) HO2S2 MNTR (B2)	• Revving engine from idle to 3,000 rpm quickly after the following conditions are met - Engine: After warming up - Keeping the engine speed between 3,500 and 4,000 rpm for 1 minute and at idle for 1 minute under no load	LEAN ←→ RICH

On Board Diagnosis Logic

INFOID:0000000005285906

The heated oxygen sensor 2 has a much longer switching time between rich and lean than the air fuel ratio (A/F) sensor 1. The oxygen storage capacity before the three way catalyst (manifold) causes the longer switching time. To judge the malfunctions of heated oxygen sensor 2, ECM monitors whether the maximum voltage of the sensor is sufficiently high during the various driving condition such as fuel cut.

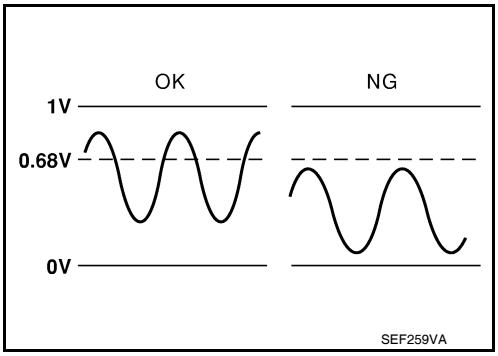

DTC No.	Trouble diagnosis name	DTC detecting condition	Possible cause
P0137 0137 (Bank 1)	Heated oxygen sensor 2 circuit low voltage	The maximum voltage from the sensor is not reached to the specified voltage.	• Harness or connectors (Heated oxygen sensor 2 circuit open or shorted.) • Heated oxygen sensor 2 • Fuel pressure • Fuel injector • Intake air leaks
P0157 0157 (Bank 2)			

DTC Confirmation Procedure

INFOID:0000000005285907

NOTE:

If DTC confirmation Procedure has been previously conducted, always turn ignition switch OFF and wait at least 10 seconds before conducting the next test.

WITH CONSULT-III

TESTING CONDITION:
For the best results, perform DTC WORK SUPPORT at a temperature of 0 to 30°C (32 to 86°F).

1. Turn ignition switch ON and select “DATA MONITOR” mode with CONSULT-III.
2. Start engine and warm it up to the normal operating temperature.
3. Turn ignition switch OFF and wait at least 10 seconds.
4. Start engine and keep the engine speed between 3,500 and 4,000 rpm for at least 1 minute under no load.
5. Let engine idle for 1 minute.
6. Check that “COOLAN TEMP/S” indicates more than 70°C (158°F).
   If not, warm up engine and go to next step when “COOLAN TEMP/S” indication reaches to 70°C (158°F).
7. Open engine hood.
8. Select “HO2S2 (B1) P1147” (for DTC P0137) “HO2S2 (B2) or P1167” (for DTC P0157) of “HO2S2” in “DTC WORK SUPPORT” mode with CONSULT-III.
9. Follow the instruction of CONSULT-III.
   NOTE:
   It will take at most 10 minutes until “COMPLETED” is displayed.
10. Check that “OK” is displayed after touching “SELF-DIAG RESULTS”.
    If “NG” is displayed, refer to EC-1359, "Diagnosis Procedure".
    If “CAN NOT BE DIAGNOSED” is displayed, perform the following.

a. Turn ignition switch OFF and leave the vehicle in a cool place (soak the vehicle).
b. Return to step 1.

Overall Function Check

INFOID:0000000005285908

Use this procedure to check the overall function of the heated oxygen sensor 2 circuit. During this check, a 1st trip DTC might not be confirmed.

WITH GST

1. Start engine and warm it up to the normal operating temperature.
2. Turn ignition switch OFF and wait at least 10 seconds.
3. Start engine and keep the engine speed between 3,500 and 4,000 rpm for at least 1 minute under no load.
4. Let engine idle 1 minute.
5. Set voltmeter probes between ECM terminal 33 [HO2S2 (B1) signal] or 34 [HO2S2 (B2) signal] and ground.
6. Check the voltage when revving up to 4,000 rpm under no load at least 10 times.
   (Depress and release accelerator pedal as soon as possible.)
   The voltage should be above 0.68 V at least once during this procedure.
   If the voltage can be confirmed in step 6, step 7 is not necessary.
7. Keep vehicle idling for 10 minutes, then check the voltage. Or check the voltage when coasting from 80 km/h (50 MPH) in D position (CVT) or 3rd gear position (M/T).
   The voltage should be above 0.68 V at least once during this procedure.
8. If NG, go to EC-1359, "Diagnosis Procedure".

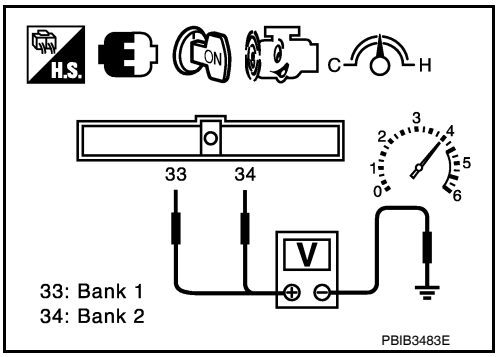

Wiring Diagram

INFOID:0000000005285909

BANK 1

EC-O2S2B1-01

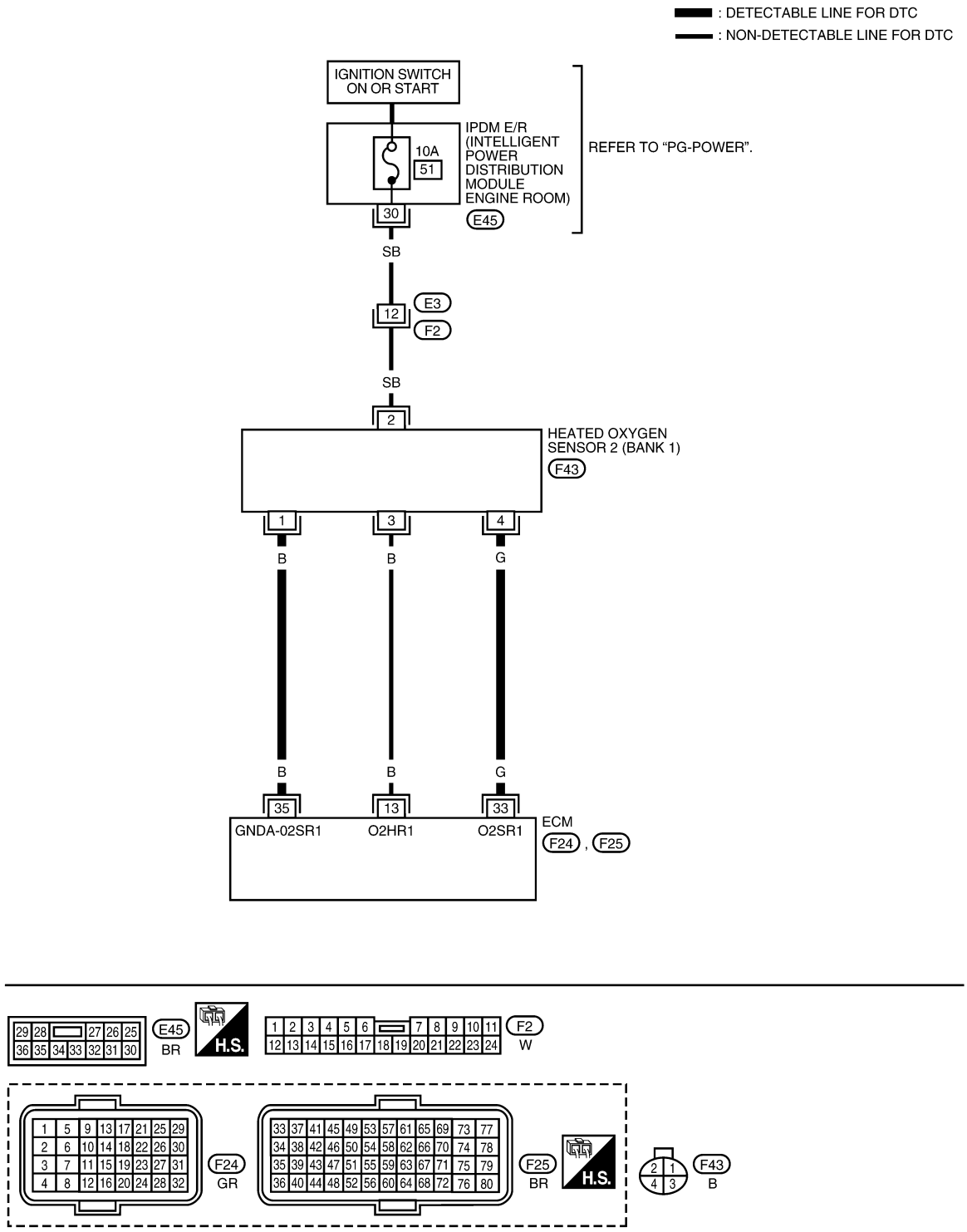

Specification data are reference values and are measured between each terminal and ground.
Pulse signal is measured by CONSULT-III.

CAUTION:

Never use ECM ground terminals when measuring input/output voltage. Doing so may result in damage to the ECM's transistor. Use a ground other than ECM terminals, such as the ground.

TERMINAL NO.	WIRE COLOR	ITEM	CONDITION	DATA (DC Voltage)
13	B	Heated oxygen sensor 2 heater (Bank 1)	**[Engine is running]** • Engine speed: Below 3,600 rpm after the following conditions are met. - Engine: After warming up - Keeping the engine speed between 3,500 and 4,000 rpm for 1 minute and at idle for 1 minute under no load.	Approximately 10 V★ 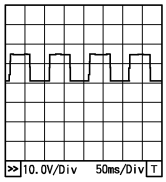 PBIA8148J
			[Ignition switch: ON] • Engine stopped **[Engine is running]** • Engine speed: Above 3,600 rpm.	BATTERY VOLTAGE (11 - 14 V)
33	G	Heated oxygen sensor 2 (Bank 1)	**[Engine is running]** • Revving engine from idle to 3,000 rpm quickly after the following conditions are met. - Engine: After warming up - Keeping the engine speed between 3,500 and 4,000 rpm for 1 minute and at idle for 1 minute under no load.	0 - Approximately 1.0 V
35	B	Sensor ground (Heated oxygen sensor 2)	**[Engine is running]** • **Warm-up condition** • Idle speed	Approximately 0 V

★: Average voltage for pulse signal (Actual pulse signal can be confirmed by oscilloscope.)

EC-O2S2B2-01

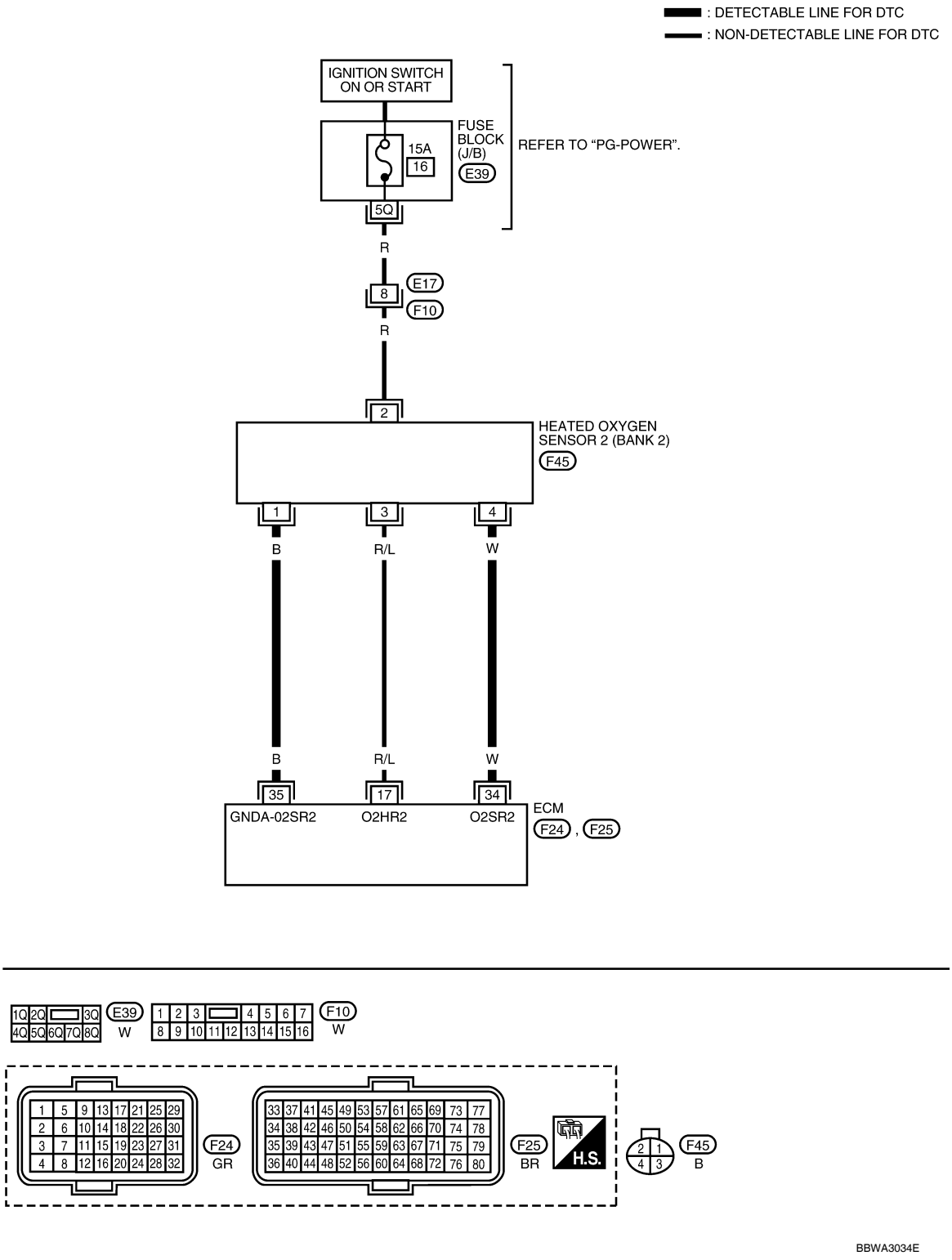

Specification data are reference values and are measured between each terminal and ground.
Pulse signal is measured by CONSULT-III.

CAUTION:

Never use ECM ground terminals when measuring input/output voltage. Doing so may result in damage to the ECM's transistor. Use a ground other than ECM terminals, such as the ground.

TERMINAL NO.	WIRE COLOR	ITEM	CONDITION	DATA (DC Voltage)
17	R/L	Heated oxygen sensor 2 heater (Bank 2)	**[Engine is running]** • Engine speed: Below 3,600 rpm after the following conditions are met. - Engine: After warming up - Keeping the engine speed between 3,500 and 4,000 rpm for 1 minute and at idle for 1 minute under no load.	Approximately 10 V★ 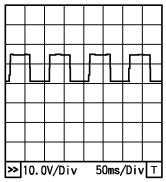 PBIA8148J
			[Ignition switch: ON] • Engine stopped **[Engine is running]** • Engine speed: Above 3,600 rpm.	BATTERY VOLTAGE (11 - 14 V)
34	W	Heated oxygen sensor 2 (Bank 2)	**[Engine is running]** • Revving engine from idle to 3,000 rpm quickly after the following conditions are met. - Engine: After warming up - Keeping the engine speed between 3,500 and 4,000 rpm for 1 minute and at idle for 1 minute under no load.	0 - Approximately 1.0 V
35	B	Sensor ground (Heated oxygen sensor 2)	**[Engine is running]** • **Warm-up condition** • Idle speed	Approximately 0 V

★: Average voltage for pulse signal (Actual pulse signal can be confirmed by oscilloscope.)

Diagnosis Procedure

INFOID:0000000005285910

1. CHECK GROUND CONNECTIONS

1. Turn ignition switch OFF.
2. Loosen and retighten ground screw on the body.
   Refer to EC-1251, "Ground Inspection".

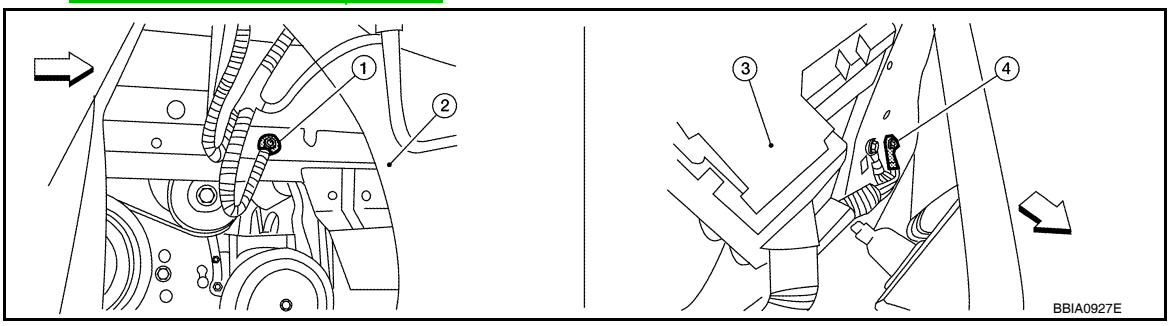

⇦: Vehicle front

1. Body ground E9 (view with front wheel RH and fender protector RH removed.)
2. Washer tank
3. Fuse and fusible link box
4. Body ground E15

OK or NG

OK >> GO TO 2.
NG >> Repair or replace ground connections.

2. CLEAR THE SELF-LEARNING DATA

With CONSULT-III

1. Start engine and warm it up to normal operating temperature.

2. Select “SELF-LEARNING CONT” in “WORK SUPPORT” mode with CONSULT-III.
3. Clear the self-learning control coefficient by touching “CLEAR”.
4. Run engine for at least 10 minutes at idle speed.
   Is the 1st trip DTC P0171, P0174 detected?
   Is it difficult to start engine?

Without CONSULT-III

1. Start engine and warm it up to normal operating temperature.
2. Turn ignition switch OFF.
3. Disconnect mass air flow sensor (1) harness connector, and restart and run engine for at least 5 seconds at idle speed.
- ⇦: Vehicle front
4. Stop engine and reconnect mass air flow sensor harness connector.
5. Check that DTC P0102 is displayed.
6. Erase the DTC memory. Refer to EC-1155, "Emission-related Diagnostic Information".
7. Check that DTC P0000 is displayed.
8. Run engine for at least 10 minutes at idle speed.
   Is the 1st trip DTC P0171, P0174 detected?
   Is it difficult to start engine?

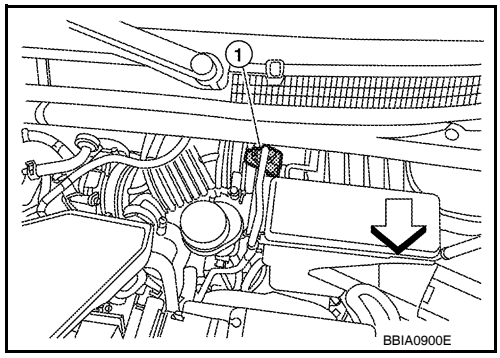

Yes or No

Yes >> Perform trouble diagnosis for DTC P0171, P0174. Refer to EC-275.
No >> GO TO 3.

3. CHECK HO2S2 GROUND CIRCUIT FOR OPEN AND SHORT

1. Turn ignition switch OFF.
2. Disconnect heated oxygen sensor 2 harness connector.
- Heated oxygen sensor 2 (Bank 1) harness connector (1)
- Heated oxygen sensor 2 (Bank 1) (2)
- Heated oxygen sensor 2 (Bank 2) (3)
- Heated oxygen sensor 2 (Bank 2) harness connector (4)
3. Disconnect ECM harness connector.
4. Check harness continuity between ECM terminal 35 and HO2S2 terminal 1. Refer to Wiring Diagram.

   Continuity should exist.

5. Also check harness for short to ground and short to power.

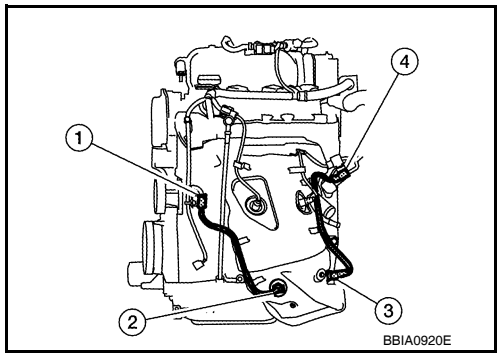

OK or NG

OK >> GO TO 4.
NG >> Repair open circuit or short to ground or short to power in harness or connectors.

4. CHECK HO2S2 INPUT SIGNAL CIRCUIT FOR OPEN AND SHORT

1. Check harness continuity between ECM terminals and HO2S2 terminal as follows.
   Refer to Wiring Diagram.

DTC	Terminal		Bank
	ECM	Sensor	
P0137	33	4	1
P0157	34	4	2

   Continuity should exist.

2. Check harness continuity between the following terminals and ground.
   Refer to Wiring Diagram.

DTC	Terminal		Bank
	ECM	Sensor	
P0137	33	4	1
P0157	34	4	2

Continuity should not exist.

3. Also check harness for short to power.

OK or NG

OK >> GO TO 5.
NG >> Repair open circuit or short to ground or short to power in harness or connectors.

5. CHECK HEATED OXYGEN SENSOR 2

Refer to EC-1361, "Component Inspection".

OK or NG

OK >> GO TO 6.
NG >> Replace malfunctioning heated oxygen sensor 2.

6. CHECK INTERMITTENT INCIDENT

Refer to EC-1245.

>> **INSPECTION END**

Component Inspection

INFOID:0000000005285911

HEATED OXYGEN SENSOR 2

With CONSULT-III

1. Start engine and warm it up to the normal operating temperature.
2. Turn ignition switch OFF and wait at least 10 seconds.
3. Start engine and keep the engine speed between 3,500 and 4,000 rpm for at least 1 minute under no load.
4. Let engine idle for 1 minute.
5. Select “FUEL INJECTION” in “ACTIVE TEST” mode, and select “HO2S2 (B1) / (B2)” as the monitor item with CONSULT-III.
6. Check “HO2S2 (B1) / (B2)” at idle speed when adjusting “FUEL INJECTION” to ± 25%.

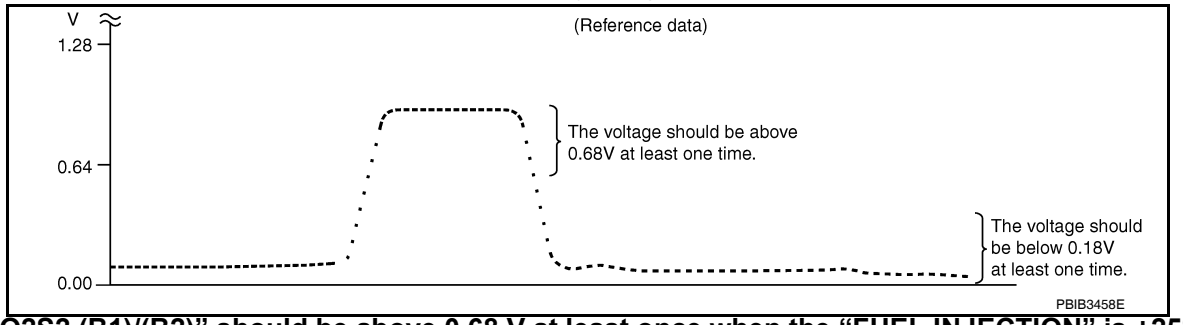

“HO2S2 (B1)/(B2)” should be above 0.68 V at least once when the “FUEL INJECTION” is +25%.
“HO2S2 (B1)/(B2)” should be below 0.18 V at least once when the “FUEL INJECTION” is –25%.

CAUTION:

- **Discard any heated oxygen sensor which has been dropped from a height of more than 0.5 m (19.7 in) onto a hard surface such as a concrete floor; use a new one.**
- **Before installing new oxygen sensor, clean exhaust system threads using oxygen sensor thread cleaner [commercial service tool (J-43897-18 or J-43897-12)] and approved anti-seize lubricant (commercial service tool).**

Without CONSULT-III

1. Start engine and warm it up to the normal operating temperature.

2. Turn ignition switch OFF and wait at least 10 seconds.
3. Start engine and keep the engine speed between 3,500 and 4,000 rpm for at least 1 minute under no load.
4. Let engine idle for 1 minute.
5. Set voltmeter probes between ECM terminal 33 [HO2S2 (B1) signal] or 34 [HO2S2 (B2) signal] and ground.
6. Check the voltage when revving up to 4,000 rpm under no load at least 10 times.
   (Depress and release accelerator pedal as soon as possible.)
   The voltage should be above 0.68 V and below 0.18 V at least once during this procedure.
   If the voltage can be confirmed at step 6, step 7 is not necessary.
7. Keep vehicle idling for 10 minutes, then check voltage. Or check the voltage when coasting from 80 km/h (50 MPH) in D position (CVT) or 3rd gear position (M/T).
   The voltage should be above 0.68 V and below 0.18 V at least once during this procedure.

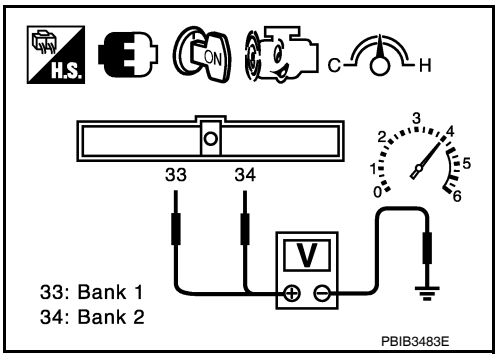

8. If NG, replace heated oxygen sensor 2.
   CAUTION:
   - **Discard any heated oxygen sensor which has been dropped from a height of more than 0.5 m (19.7 in) onto a hard surface such as a concrete floor; use a new one.**
   - **Before installing new oxygen sensor, clean exhaust system threads using oxygen sensor thread cleaner [commercial service tool (J-43897-18 or J-43897-12)] and approved anti-seize lubricant (commercial service tool).**

Removal and Installation

INFOID:0000000005285912

HEATED OXYGEN SENSOR 2

Refer to EM-23.

DTC P0138, P0158 HO2S2

Component Description

INFOID:0000000005285913

The heated oxygen sensor 2, after three way catalyst (manifold), monitors the oxygen level in the exhaust gas on each bank.
Even if switching characteristics of the air fuel ratio (A/F) sensor 1 are shifted, the air/fuel ratio is controlled to stoichiometric, by the signal from the heated oxygen sensor 2.
This sensor is made of ceramic zirconia. The zirconia generates voltage from approximately 1 V in richer conditions to 0 V in leaner conditions.
Under normal conditions the heated oxygen sensor 2 is not used for engine control operation.

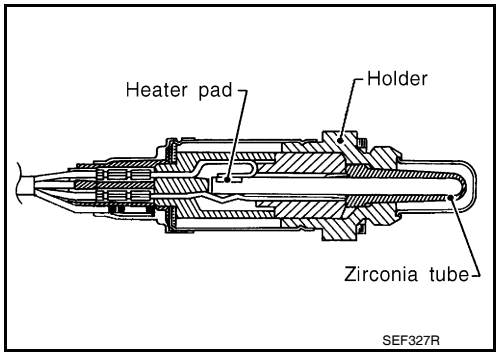

CONSULT-III Reference Value in Data Monitor Mode

INFOID:0000000005285914

Specification data are reference values.

Monitor item	Condition	Specification
HO2S2 (B1) HO2S2 (B2)	• Revving engine from idle to 3,000 rpm quickly after the following conditions are met - Engine: After warming up - Keeping the engine speed between 3,500 and 4,000 rpm for 1 minute and at idle for 1 minute under no load	0 - 0.3 V ←→ Approx. 0.6 - 1.0 V
HO2S2 MNTR (B1) HO2S2 MNTR (B2)	• Revving engine from idle to 3,000 rpm quickly after the following conditions are met - Engine: After warming up - Keeping the engine speed between 3,500 and 4,000 rpm for 1 minute and at idle for 1 minute under no load	LEAN ←→ RICH

On Board Diagnosis Logic

INFOID:0000000005285915

The heated oxygen sensor 2 has a much longer switching time between rich and lean than the air fuel ratio (A/F) sensor 1. The oxygen storage capacity before the three way catalyst (manifold) causes the longer switching time.

MALFUNCTION A

To judge the malfunctions of rear heated oxygen sensor 2, ECM monitors whether the voltage is unusually high during the various driving condition such as fuel cut.

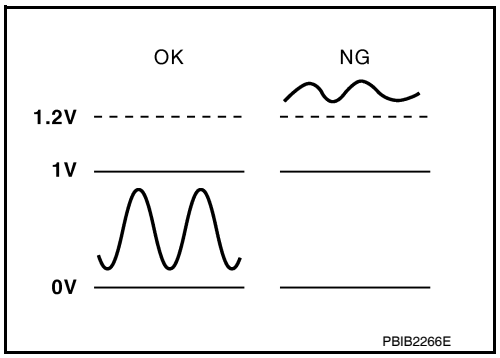

MALFUNCTION B

To judge the malfunctions of heated oxygen sensor 2, ECM monitors whether the minimum voltage of sensor is sufficiently low during the various driving condition such as fuel cut.

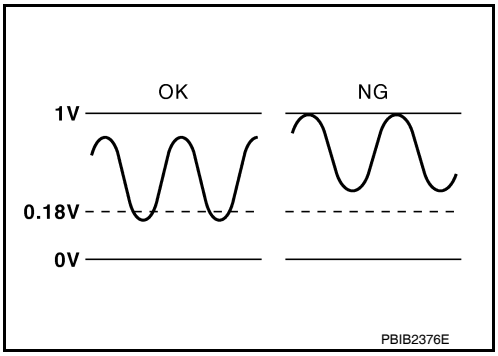

DTC No.	Trouble diagnosis name	DTC detecting condition		Possible cause
P0138 0138 (Bank 1)	Heated oxygen sensor 2 circuit high voltage	A)	An excessively high voltage from the sensor is sent to ECM.	• Harness or connectors (Heated oxygen sensor 2 circuit is open or shorted.) • Heated oxygen sensor 2
P0158 0158 (Bank 2)		B)	The minimum voltage from the sensor is not reached to the specified voltage.	• Harness or connectors (Heated oxygen sensor circuit is open or shorted.) • Heated oxygen sensor 2 • Fuel pressure • Fuel injector

DTC Confirmation Procedure

INFOID:0000000005285916

Perform PROCEDURE FOR MALFUNCTION A first.
If DTC cannot be confirmed, perform PROCEDURE FOR MALFUNCTION B.
NOTE:
If DTC Confirmation Procedure has been previously conducted, always turn ignition switch OFF and wait at least 10 seconds before conducting the next test.

PROCEDURE FOR MALFUNCTION A

With CONSULT-III

1. Turn ignition switch ON and select “DATA MONITOR” mode with CONSULT-III.
2. Start engine and warm it up to the normal operating temperature.
3. Turn ignition switch OFF and wait at least 10 seconds.
4. Start engine and keep the engine speed between 3,500 and 4,000 rpm for at least 1 minute under no load.
5. Let engine idle for 2 minutes.
6. Check 1st trip DTC.
7. If 1st trip DTC is detected, go to EC-1369, "Diagnosis Procedure".

With GST

Follow the procedure “With CONSULT-III” above.

PROCEDURE FOR MALFUNCTION B

With CONSULT-III

TESTING CONDITION:
For the best results, perform DTC WORK SUPPORT at a temperature of 0 to 30°C (32 to 86°F).

1. Turn ignition switch ON and select “DATA MONITOR ” mode with CONSULT-III
2. Start engine and warm it up to the normal operating temperature.
3. Turn ignition switch OFF and wait at least 10 seconds.
4. Start engine and keep the engine speed between 3,500 and 4,000 rpm for at least 1 minute under no load.
5. Let engine idle for 1 minute.
6. Check that “COOLAN TEMP/S” indicates more than 70°C (158°F).

If not, warm up engine and go to next step when “COOLAN TEMP/S” indication reaches to 70°C (158°F).

7. Open engine hood.
8. Select “HO2S2 (B1) P1146” (for DTC P0138) or “HO2S2 (B2) P1166” (for DTC P0158) of “HO2S2” in “DTC WORK SUPPORT” mode with CONSULT-III.
9. Follow the instruction of CONSULT-III.
   NOTE:
   It will take at most 10 minutes until “COMPLETED” is displayed.
10. Check that “OK” is displayed after touching “SELF-DIAG RESULTS”.
    If “NG” is displayed, refer to EC-1369, "Diagnosis Procedure".
    If “CAN NOT BE DIAGNOSED” is displayed, perform the following.

a. Turn ignition switch OFF and leave the vehicle in a cool place (soak the vehicle).
b. Return to step 1.

Overall Function Check

INFOID:0000000005285917

PROCEDURE FOR MALFUNCTION B

Use this procedure to check the overall function of the heated oxygen sensor 2 circuit. During this check, a 1st trip DTC might not be confirmed.

With GST

1. Start engine and warm it up to the normal operating temperature.
2. Turn ignition switch OFF and wait at least 10 seconds.
3. Start engine and keep the engine speed between 3,500 and 4,000 rpm for at least 1 minute under no load.
4. Let engine idle 1 minute.
5. Set voltmeter probes between ECM terminal 33 [HO2S2 (B1) signal] or 34 [HO2S2 (B2) signal] and ground.
6. Check the voltage when revving up to 4,000 rpm under no load at least 10 times.
   (Depress and release accelerator pedal as soon as possible.)
   The voltage should be below 0.18 V at least once during this procedure.
   If the voltage can be confirmed in step 6, step 7 is not necessary.
7. Keep vehicle at idling for 10 minutes, then check the voltage. Or check the voltage when coasting from 80 km/h (50 MPH) in D position (CVT) or 3rd gear position (M/T).
   The voltage should be below 0.18 V at least once during this procedure.
8. If NG, go to EC-1369, "Diagnosis Procedure".

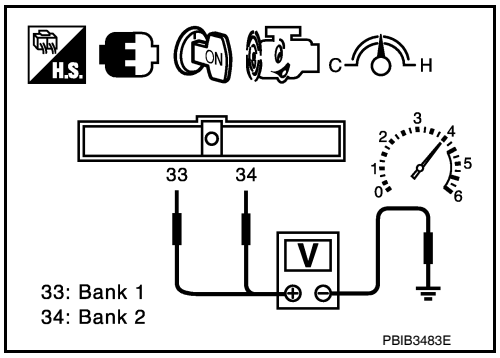

Wiring Diagram

INFOID:0000000005285918

BANK 1

EC-O2S2B1-01

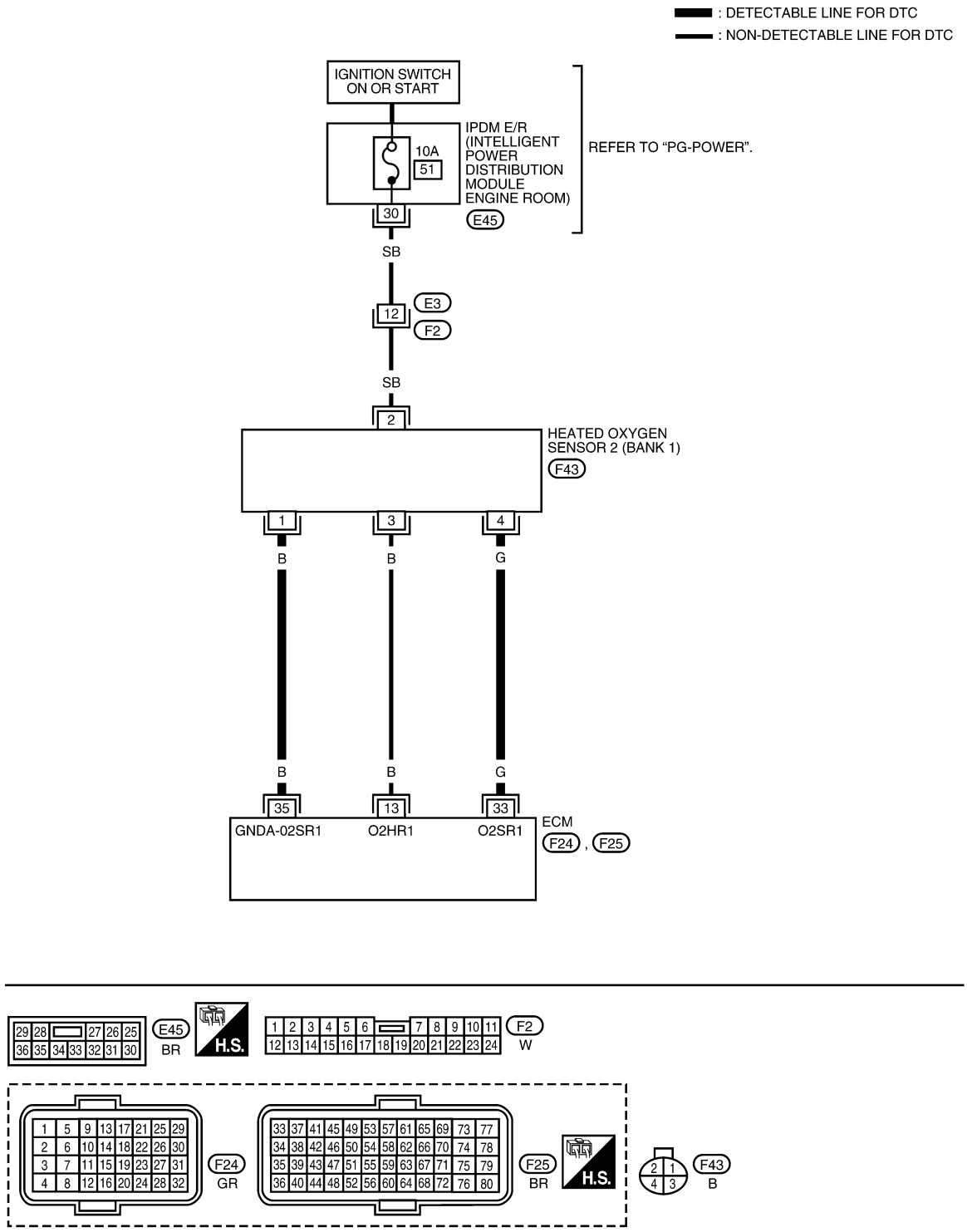

Specification data are reference values and are measured between each terminal and ground.
Pulse signal is measured by CONSULT-III.

CAUTION:

Never use ECM ground terminals when measuring input/output voltage. Doing so may result in damage to the ECM's transistor. Use a ground other than ECM terminals, such as the ground.

TERMINAL NO.	WIRE COLOR	ITEM	CONDITION	DATA (DC Voltage)
13	B	Heated oxygen sensor 2 heater (Bank 1)	**[Engine is running]** • Engine speed: Below 3,600 rpm after the following conditions are met. - Engine: After warming up - Keeping the engine speed between 3,500 and 4,000 rpm for 1 minute and at idle for 1 minute under no load.	Approximately 10 V★ 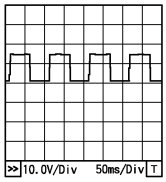 PBIA8148J
			[Ignition switch: ON] • Engine stopped **[Engine is running]** • Engine speed: Above 3,600 rpm.	BATTERY VOLTAGE (11 - 14 V)
33	G	Heated oxygen sensor 2 (Bank 1)	**[Engine is running]** • Revving engine from idle to 3,000 rpm quickly after the following conditions are met. - Engine: After warming up - Keeping the engine speed between 3,500 and 4,000 rpm for 1 minute and at idle for 1 minute under no load.	0 - Approximately 1.0 V
35	B	Sensor ground (Heated oxygen sensor 2)	**[Engine is running]** • **Warm-up condition** • Idle speed	Approximately 0 V

★: Average voltage for pulse signal (Actual pulse signal can be confirmed by oscilloscope.)

EC-O2S2B2-01

: DETECTABLE LINE FOR DTC
: NON-DETECTABLE LINE FOR DTC

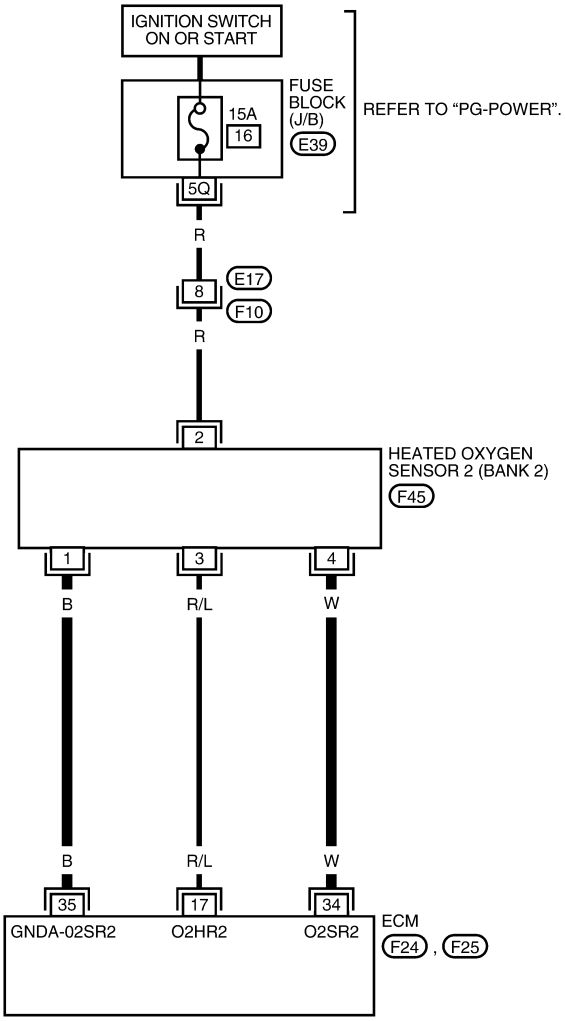

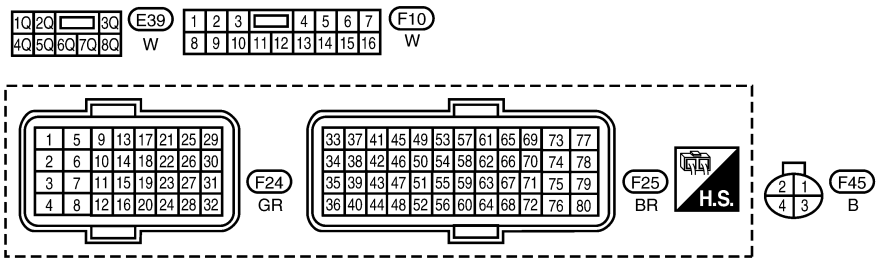

BBWA3034E

Specification data are reference values and are measured between each terminal and ground.
Pulse signal is measured by CONSULT-III.

CAUTION:

Never use ECM ground terminals when measuring input/output voltage. Doing so may result in damage to the ECM's transistor. Use a ground other than ECM terminals, such as the ground.

TERMINAL NO.	WIRE COLOR	ITEM	CONDITION	DATA (DC Voltage)
17	R/L	Heated oxygen sensor 2 heater (Bank 2)	**[Engine is running]** • Engine speed: Below 3,600 rpm after the following conditions are met. - Engine: After warming up - Keeping the engine speed between 3,500 and 4,000 rpm for 1 minute and at idle for 1 minute under no load.	Approximately 10 V★ 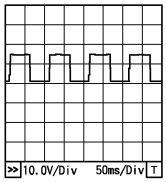 PBIA8148J
			[Ignition switch: ON] • Engine stopped **[Engine is running]** • Engine speed: Above 3,600 rpm.	BATTERY VOLTAGE (11 - 14 V)
34	W	Heated oxygen sensor 2 (Bank 2)	**[Engine is running]** • Revving engine from idle to 3,000 rpm quickly after the following conditions are met. - Engine: After warming up - Keeping the engine speed between 3,500 and 4,000 rpm for 1 minute and at idle for 1 minute under no load.	0 - Approximately 1.0 V
35	B	Sensor ground (Heated oxygen sensor 2)	**[Engine is running]** • **Warm-up condition** • Idle speed	Approximately 0 V

★: Average voltage for pulse signal (Actual pulse signal can be confirmed by oscilloscope.)

Diagnosis Procedure

INFOID:0000000005285919

PROCEDURE FOR MALFUNCTION A

1. CHECK GROUND CONNECTIONS

1. Turn ignition switch OFF.
2. Loosen and retighten ground screw on the body.
   Refer to EC-1251, "Ground Inspection".

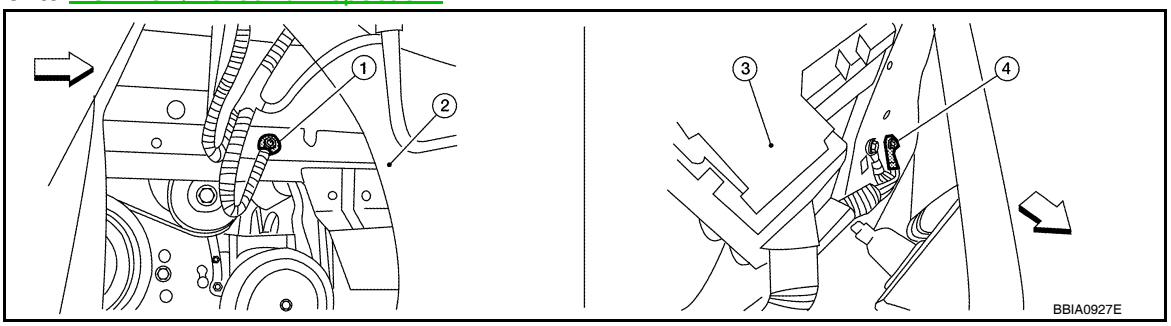

⇦: Vehicle front

1. Body ground E9 (view with front wheel RH and fender protector RH removed.)
2. Washer tank
3. Fuse and fusible link box
4. Body ground E15

OK or NG

OK >> GO TO 2.
NG >> Repair or replace ground connections.

2. CHECK HO2S2 CONNECTOR FOR WATER

1. Disconnect heated oxygen sensor 2 harness connector.
- Heated oxygen sensor 2 (Bank 1) harness connector (1)
- Heated oxygen sensor 2 (Bank 1) (2)
- Heated oxygen sensor 2 (Bank 2) (3)
- Heated oxygen sensor 2 (Bank 2) harness connector (4)
2. Check that water is not inside connectors.

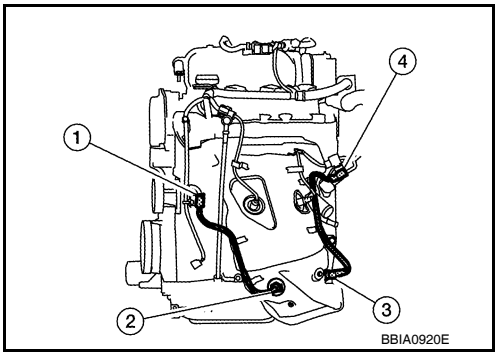

OK or NG

OK >> GO TO 3.
NG >> Repair or replace harness or connectors.

3. CHECK HO2S2 GROUND CIRCUIT FOR OPEN AND SHORT

1. Disconnect ECM harness connector.
2. Check harness continuity between ECM terminal 35 and HO2S2 terminal 1. Refer to Wiring Diagram.

Continuity should exist.

3. Also check harness for short to ground and short to power.

OK or NG

OK >> GO TO 4.
NG >> Repair open circuit or short to ground or short to power in harness or connectors.

4. CHECK HO2S2 INPUT SIGNAL CIRCUIT FOR OPEN AND SHORT

1. Check harness continuity between ECM terminals and HO2S2 terminal as follows.
Refer to Wiring Diagram.

DTC	Terminal		Bank
	ECM	Sensor	
P0137	33	4	1
P0157	34	4	2

Continuity should exist.

2. Check harness continuity between the following terminals and ground.
Refer to Wiring Diagram.

DTC	Terminal		Bank
	ECM	Sensor	
P0137	33	4	1
P0157	34	4	2

Continuity should not exist.

3. Also check harness for short to power.

OK or NG

OK >> GO TO 5.
NG >> Repair open circuit or short to ground or short to power in harness or connectors.

5. CHECK HEATED OXYGEN SENSOR 2

Refer to EC-1372, "Component Inspection".

OK or NG

OK >> GO TO 6.
NG >> Replace malfunctioning heated oxygen sensor 2.

6. CHECK INTERMITTENT INCIDENT

Refer to EC-1245.

>> **INSPECTION END**

PROCEDURE FOR MALFUNCTION B

1. CHECK GROUND CONNECTIONS

1. Turn ignition switch OFF.
2. Loosen and retighten ground screw on the body.
   Refer to EC-1251, "Ground Inspection".

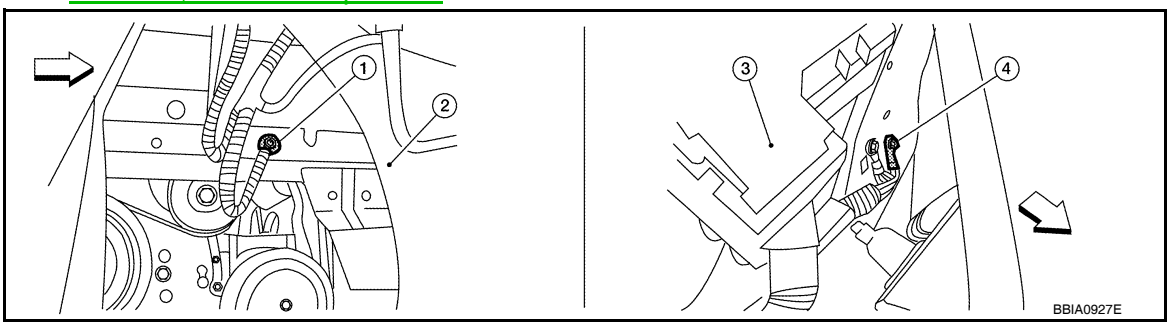

⇦: Vehicle front

1. Engine ground E9 (view with front wheel RH and fender protector RH removed.)
2. Washer tank
3. Fuse and fusible link box
4. Engine ground E15

OK or NG

OK >> GO TO 2.
NG >> Repair or replace ground connections.

2. CLEAR THE SELF-LEARNING DATA

With CONSULT-III

1. Start engine and warm it up to normal operating temperature.
2. Select “SELF-LEARNING CONT” in “WORK SUPPORT” mode with CONSULT-III.
3. Clear the self-learning control coefficient by touching “CLEAR”.
4. Run engine for at least 10 minutes at idle speed.
   Is the 1st trip DTC P0172 or P0175 detected?
   Is it difficult to start engine?

Without CONSULT-III

1. Start engine and warm it up to normal operating temperature.
2. Turn ignition switch OFF.
3. Disconnect mass air flow sensor (1) harness connector, and restart and run engine for at least 5 seconds at idle speed.
   - ⇦: Vehicle front
4. Stop engine and reconnect mass air flow sensor harness connector.
5. Check that DTC P0102 is displayed.
6. Erase the DTC memory. Refer to EC-1155, "Emission-related Diagnostic Information".
7. Check that DTC P0000 is displayed.
8. Run engine for at least 10 minutes at idle speed.
   Is the 1st trip DTC P0172 or P0175 detected?
   Is it difficult to start engine?

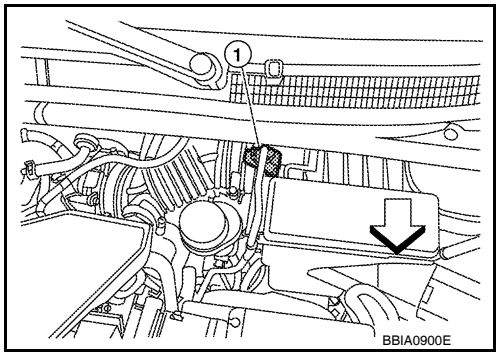

Yes or No

Yes >> Perform trouble diagnosis for DTC P0172 or P0175. Refer to EC-281.
No >> GO TO 3.

3. CHECK HO2S2 GROUND CIRCUIT FOR OPEN AND SHORT

1. Turn ignition switch OFF.

2. Disconnect heated oxygen sensor 2 harness connector.
- Heated oxygen sensor 2 (Bank 1) harness connector (1)
- Heated oxygen sensor 2 (Bank 1) (2)
- Heated oxygen sensor 2 (Bank 2) (3)
- Heated oxygen sensor 2 (Bank 2) harness connector (4)

3. Disconnect ECM harness connector.
4. Check harness continuity between ECM terminal 35 and HO2S2 terminal 1. Refer to Wiring Diagram.

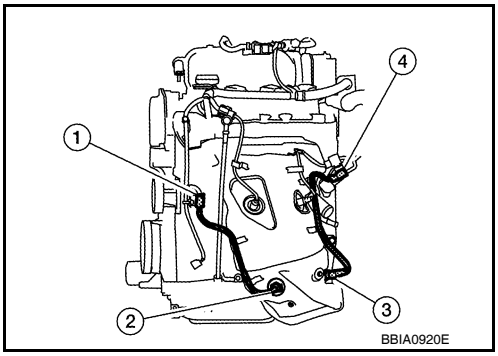

Continuity should exist.

5. Also check harness for short to ground and short to power.

OK or NG

OK >> GO TO 4.
NG >> Repair open circuit or short to ground or short to power in harness or connectors.

4. CHECK HO2S2 INPUT SIGNAL CIRCUIT FOR OPEN AND SHORT

1. Check harness continuity between ECM terminals and HO2S2 terminal as follows. Refer to Wiring Diagram.

DTC	Terminal		Bank
	ECM	Sensor	
P0137	33	4	1
P0157	34	4	2

Continuity should exist.

2. Check harness continuity between the following terminals and ground. Refer to Wiring Diagram.

DTC	Terminal		Bank
	ECM	Sensor	
P0137	33	4	1
P0157	34	4	2

Continuity should not exist.

3. Also check harness for short to power.

OK or NG

OK >> GO TO 5.
NG >> Repair open circuit or short to ground or short to power in harness or connectors.

5. CHECK HEATED OXYGEN SENSOR 2

Refer to EC-1372, "Component Inspection".

OK or NG

OK >> GO TO 6.
NG >> Replace malfunctioning heated oxygen sensor 2.

6. CHECK INTERMITTENT INCIDENT

Refer to EC-1245.

>> **INSPECTION END**

Component Inspection

INFOID:0000000005285920

HEATED OXYGEN SENSOR 2

With CONSULT-III

1. Start engine and warm it up to the normal operating temperature.
2. Turn ignition switch OFF and wait at least 10 seconds.
3. Start engine and keep the engine speed between 3,500 and 4,000 rpm for at least 1 minute under no load.
4. Let engine idle for 1 minute.
5. Select “FUEL INJECTION” in “ACTIVE TEST” mode, and select “HO2S2 (B1)/(B2)” as the monitor item with CONSULT-III.
6. Check “HO2S2 (B1)/(B2)” at idle speed when adjusting “FUEL INJECTION” to ± 25%.

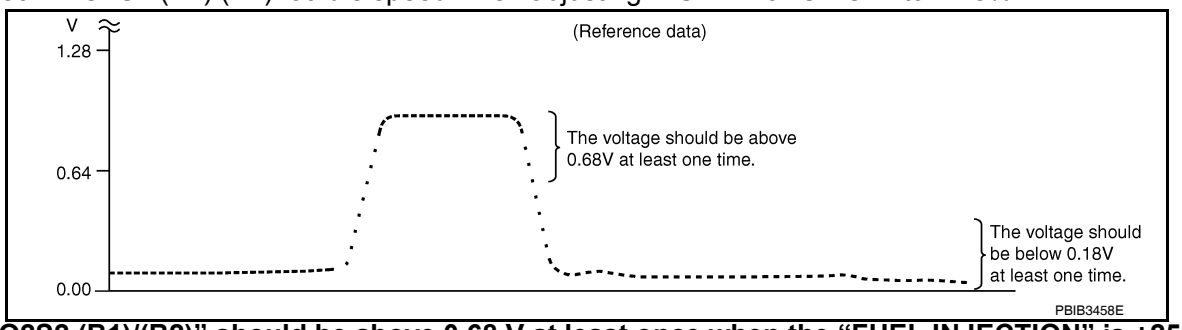

“HO2S2 (B1)/(B2)” should be above 0.68 V at least once when the “FUEL INJECTION” is +25%.
“HO2S2 (B1)/(B2)” should be below 0.18 V at least once when the “FUEL INJECTION” is –25%.

CAUTION:
- **Discard any heated oxygen sensor which has been dropped from a height of more than 0.5 m (19.7 in) onto a hard surface such as a concrete floor; use a new one.**
- **Before installing new oxygen sensor, clean exhaust system threads using oxygen sensor thread cleaner [commercial service tool (J-43897-18 or J-43897-12)] and approved anti-seize lubricant (commercial service tool).**

Without CONSULT-III

1. Start engine and warm it up to the normal operating temperature.
2. Turn ignition switch OFF and wait at least 10 seconds.
3. Start engine and keep the engine speed between 3,500 and 4,000 rpm for at least 1 minute under no load.
4. Let engine idle for 1 minute.
5. Set voltmeter probes between ECM terminal 33 [HO2S2 (B1) signal] or 34 [HO2S2 (B2) signal] and ground.
6. Check the voltage when revving up to 4,000 rpm under no load at least 10 times.
   (Depress and release accelerator pedal as soon as possible.)
   The voltage should be above 0.68 V and below 0.18 V at least once during this procedure.
   If the voltage can be confirmed at step 6, step 7 is not necessary.
7. Keep vehicle idling for 10 minutes, then check voltage. Or check the voltage when coasting from 80 km/h (50 MPH) in D position (CVT) or 3rd gear position (M/T).
   The voltage should be above 0.68 V and below 0.18 V at least once during this procedure.

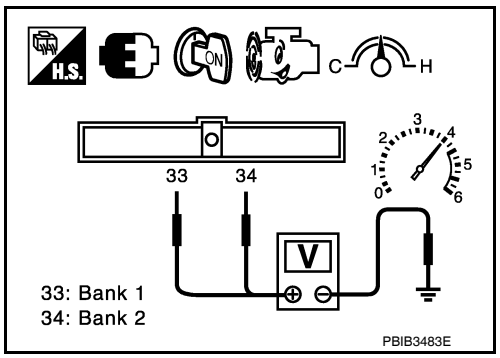

8. If NG, replace heated oxygen sensor 2.

CAUTION:
- **Discard any heated oxygen sensor which has been dropped from a height of more than 0.5 m (19.7 in) onto a hard surface such as a concrete floor; use a new one.**
- **Before installing new oxygen sensor, clean exhaust system threads using oxygen sensor thread cleaner [commercial service tool (J-43897-18 or J-43897-12)] and approved anti-seize lubricant (commercial service tool).**

Removal and Installation

INFOID:0000000005285921

HEATED OXYGEN SENSOR 2

Refer to EM-140.

DTC P0139, P0159 HO2S2

Component Description

INFOID:0000000005285922

The heated oxygen sensor 2, after three way catalyst (manifold), monitors the oxygen level in the exhaust gas on each bank.
Even if switching characteristics of the air fuel ratio (A/F) sensor 1 are shifted, the air/fuel ratio is controlled to stoichiometric, by the signal from the heated oxygen sensor 2.
This sensor is made of ceramic zirconia. The zirconia generates voltage from approximately 1 V in richer conditions to 0 V in leaner conditions.
Under normal conditions the heated oxygen sensor 2 is not used for engine control operation.

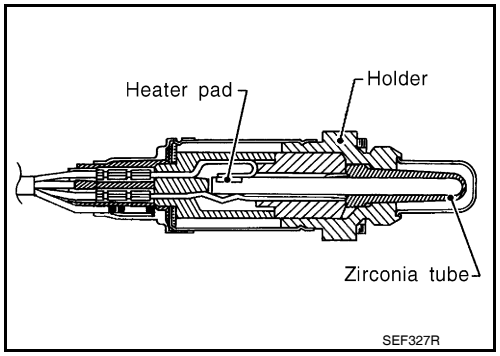

CONSULT-III Reference Value in Data Monitor Mode

INFOID:0000000005285923

Specification data are reference values.

Monitor Item	Condition	Specification
HO2S2 (B1) HO2S2 (B2)	• Revving engine from idle to 3,000 rpm quickly after the following conditions are met - Engine: After warming up - Keeping the engine speed between 3,500 and 4,000 rpm for 1 minute and at idle for 1 minute under no load	0 - 0.3 V ←→ Approx. 0.6 - 1.0 V
HO2S2 MNTR (B1) HO2S2 MNTR (B2)	• Revving engine from idle to 3,000 rpm quickly after the following conditions are met - Engine: After warming up - Keeping the engine speed between 3,500 and 4,000 rpm for 1 minute and at idle for 1 minute under no load	LEAN ←→ RICH
HO2 S2 DIAG1 (B1)	DTC P0139 self-diagnosis (delayed response) is incomplete.	INCMP
	DTC P0139 self-diagnosis (delayed response) is complete.	CMPLT
HO2 S2 DIAG1 (B2)	DTC P0159 self-diagnosis (delayed response) is incomplete.	INCMP
	DTC P0159 self-diagnosis (delayed response) is complete.	CMPLT
HO2 S2 DIAG2 (B1)	DTC P0139 self-diagnosis (slow response) is incomplete.	INCMP
	DTC P0139 self-diagnosis (slow response) is complete.	CMPLT
HO2 S2 DIAG2 (B2)	DTC P0159 self-diagnosis (slow response) is incomplete.	INCMP
	DTC P0159 self-diagnosis (slow response) is complete.	CMPLT

On Board Diagnosis Logic

INFOID:0000000005285924

The heated oxygen sensor 2 has a much longer switching time between rich and lean than the air fuel ratio (A/F) sensor 1. The oxygen storage capacity of the three way catalyst 1 causes the longer switching time. To judge the malfunctions of heated oxygen sensor 2, ECM monitors whether the switching response of the sensor's voltage is faster than specified during various driving conditions such as fuel cut.

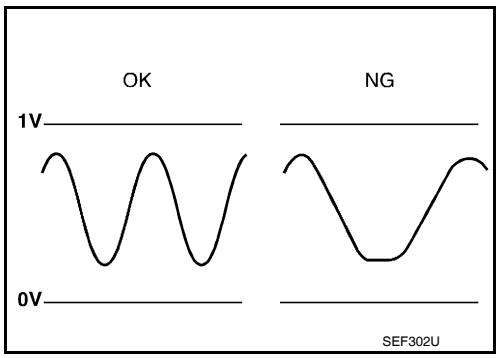

DTC No.	Trouble diagnosis name	DTC detecting condition	Possible cause
P0139	Heated oxygen sensor 2 (bank 1) circuit slow response	The switching time between rich and lean of a heated oxygen sensor 2 signal delays more than the specified time computed by ECM.	• Harness or connectors (The sensor circuit is open or shorted) • Heated oxygen sensor 2 • Fuel system • EVAP system • Intake air system
P0159	Heated oxygen sensor 2 (bank 2) circuit slow response		

DTC Confirmation Procedure

INFOID:0000000005285925

1. INSPECTION START

Do you have CONSULT-III?

Do you have CONSULT-III?

YES >> GO TO 2.
NO >> GO TO 7.

2. PRECONDITIONING

If DTC Confirmation Procedure has been previously conducted, always perform the following procedure before conducting the next test.

1. Turn ignition switch OFF and wait at least 10 seconds.
2. Turn ignition switch ON.
3. Turn ignition switch OFF and wait at least 10 seconds.

TESTING CONDITION:
For better results, perform "DTC WORK SUPPORT" at a temperature of 0 to 30°C (32 to 86°F).

>> GO TO 3.

3. PERFORM DTC CONFIRMATION PROCEDURE

With CONSULT-III

1. Turn ignition switch ON and select "DATA MONITOR" mode with CONSULT-III.
2. Start engine and warm it up to the normal operating temperature.
3. Turn ignition switch OFF and wait at least 10 seconds.
4. Turn ignition switch ON.
5. Turn ignition switch OFF and wait at least 10 seconds.
6. Start engine and keep the engine speed between 3,500 and 4,000 rpm for at least 1 minute under no load.
7. Let engine idle for 1 minute.
8. Make sure that "COOLAN TEMP/S" indicates more than 70°C (158°F).
9. Drive the vehicle at a speed of 60 km/h (38 MPH) on the suitable gear position and keep the speed.
   CAUTION:
   Always drive vehicle at a safe speed.
10. Release the accelerator pedal fully at least 5 seconds.
    CAUTION:
    - **Make it the condition that engine brake operates.**
    - **Always drive vehicle safely.**
    - **Never apply brake when releasing the accelerator pedal.**
11. Repeat step 9 and 10 at least 8 times.
12. Check the following item of "DATA MONITOR".

DTC	Data monitor item	Status
P0139	HO2 S2 DIAG1 (B1)	CMPLT
	HO2 S2 DIAG2 (B1)	
P0159	HO2 S2 DIAG1 (B2)	
	HO2 S2 DIAG2 (B2)	

Is "CMPLT" displayed on CONSULT-III screen?

YES >> GO TO 6.

NO-1: “CMPLT” are not displayed on DIAG 1>>Perform DTC confirmation procedure again.
NO-2: “CMPLT” are not displayed on DIAG 2>>GO TO 4.

4. PERFORM DTC WORK SUPPORT

1. Open engine hood.
2. Select “HO2S2 (B1) P0139” or “HO2S2 (B2) P0159” of “HO2S2” in “DTC WORK SUPPORT” mode with CONSULT-III.
3. Start engine and follow the instruction of CONSULT-III display.
   NOTE:
   It will take at most 10 minutes until “COMPLETED” is displayed.

Is “COMPLETED” displayed on CONSULT-III screen?

YES >> GO TO 6.
NO >> GO TO 5.

5. PERFORM DTC CONFIRMATION PROCEDURE AGAIN

1. Turn ignition switch OFF and leave the vehicle in a cool place (soak the vehicle).
2. Perform DTC confirmation procedure again.

>> GO TO 3.

6. PERFORM SELF-DIAGNOSIS

With CONSULT-III
Perform ECM self-diagnosis.

Is DTC “P0139” or “P0159” detected?

YES >> Proceed to EC-1381, "Diagnosis Procedure".
NO >> INSPECTION END

7. PERFORM COMPONENT FUNCTION CHECK

Perform component function check. Refer to EC-1377, "Overall Function Check".
NOTE:
Use component function check to check the overall function of the heated oxygen sensor 2 circuit. During this check, a 1st trip DTC might not be confirmed.

Is the inspection result normal?

YES >> INSPECTION END
NO >> Proceed to EC-1381, "Diagnosis Procedure".

Overall Function Check

INFOID:0000000005285926

Use this procedure to check the overall function of the heated oxygen sensor 2 circuit. During this check, a 1st trip DTC might not be confirmed.

WITH GST

1. Start engine and warm it up to the normal operating temperature.
2. Turn ignition switch OFF and wait at least 10 seconds.
3. Start engine and keep the engine between 3,500 and 4,000 rpm for at least 1 minute under no load.
4. Let engine idle for 1 minute.
5. Set voltmeter probes between ECM terminal 33 [HO2S2 (b1) signal] or 34 [HO2S2 (B2) signal] and ground.
6. Check the voltage when revving up to 4,000 rpm under no load at least 10 times.
   (Depress and release accelerator pedal as soon as possible.)
   A change of voltage should be more than 0.8 V for 1 second during this procedure.
   If the voltage can be confirmed in step 6, step 7 is not necessary.
7. Keep vehicle at idling for 10 minutes, then check the voltage. Or check the voltage when coasting from 80 km/h (50 MPH) in D position (CVT) or 3rd gear position (M/T).
   A change of voltage should be more than 0.8 V for 1 second during this procedure.

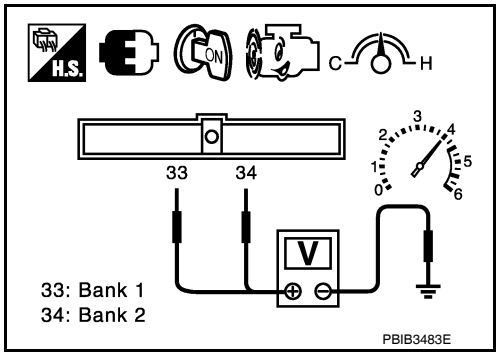

8. If NG, go to EC-1381, "Diagnosis Procedure".

Wiring Diagram

INFOID:0000000005285927

BANK 1

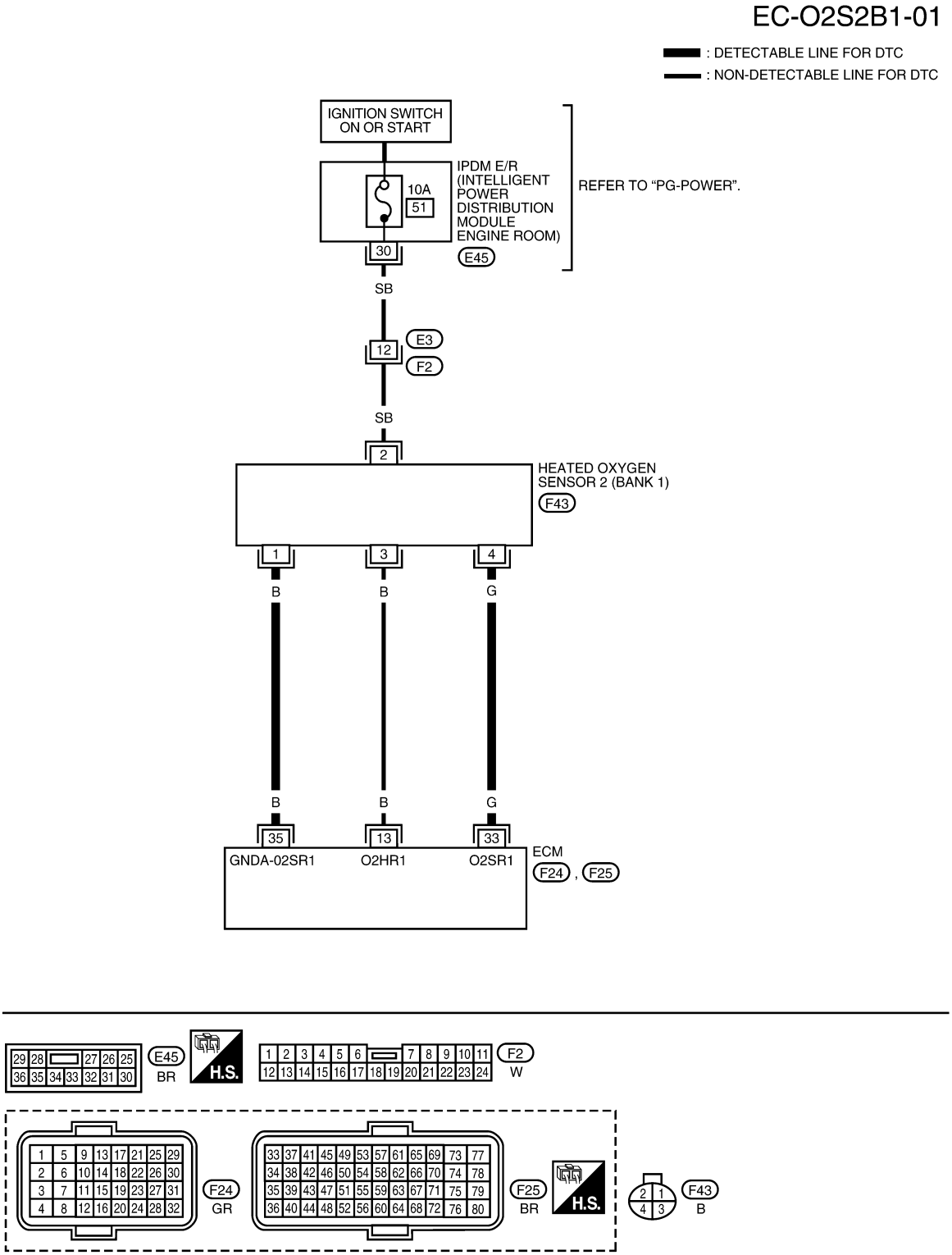

Specification data are reference values and are measured between each terminal and ground.
Pulse signal is measured by CONSULT-III.

CAUTION:

Never use ECM ground terminals when measuring input/output voltage. Doing so may result in damage to the ECM's transistor. Use a ground other than ECM terminals, such as the ground.

TERMINAL NO.	WIRE COLOR	ITEM	CONDITION	DATA (DC Voltage)
13	B	Heated oxygen sensor 2 heater (Bank 1)	**[Engine is running]** • Engine speed: Below 3,600 rpm after the following conditions are met. - Engine: After warming up - Keeping the engine speed between 3,500 and 4,000 rpm for 1 minute and at idle for 1 minute under no load.	Approximately 10 V★ 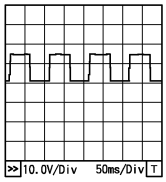 PBIA8148J
			[Ignition switch: ON] • Engine stopped **[Engine is running]** • Engine speed: Above 3,600 rpm.	BATTERY VOLTAGE (11 - 14 V)
33	G	Heated oxygen sensor 2 (Bank 1)	**[Engine is running]** • Revving engine from idle to 3,000 rpm quickly after the following conditions are met. - Engine: After warming up - Keeping the engine speed between 3,500 and 4,000 rpm for 1 minute and at idle for 1 minute under no load.	0 - Approximately 1.0 V
35	B	Sensor ground (Heated oxygen sensor 2)	**[Engine is running]** • **Warm-up condition** • Idle speed	Approximately 0 V

★: Average voltage for pulse signal (Actual pulse signal can be confirmed by oscilloscope.)

BANK 2

EC-O2S2B2-01

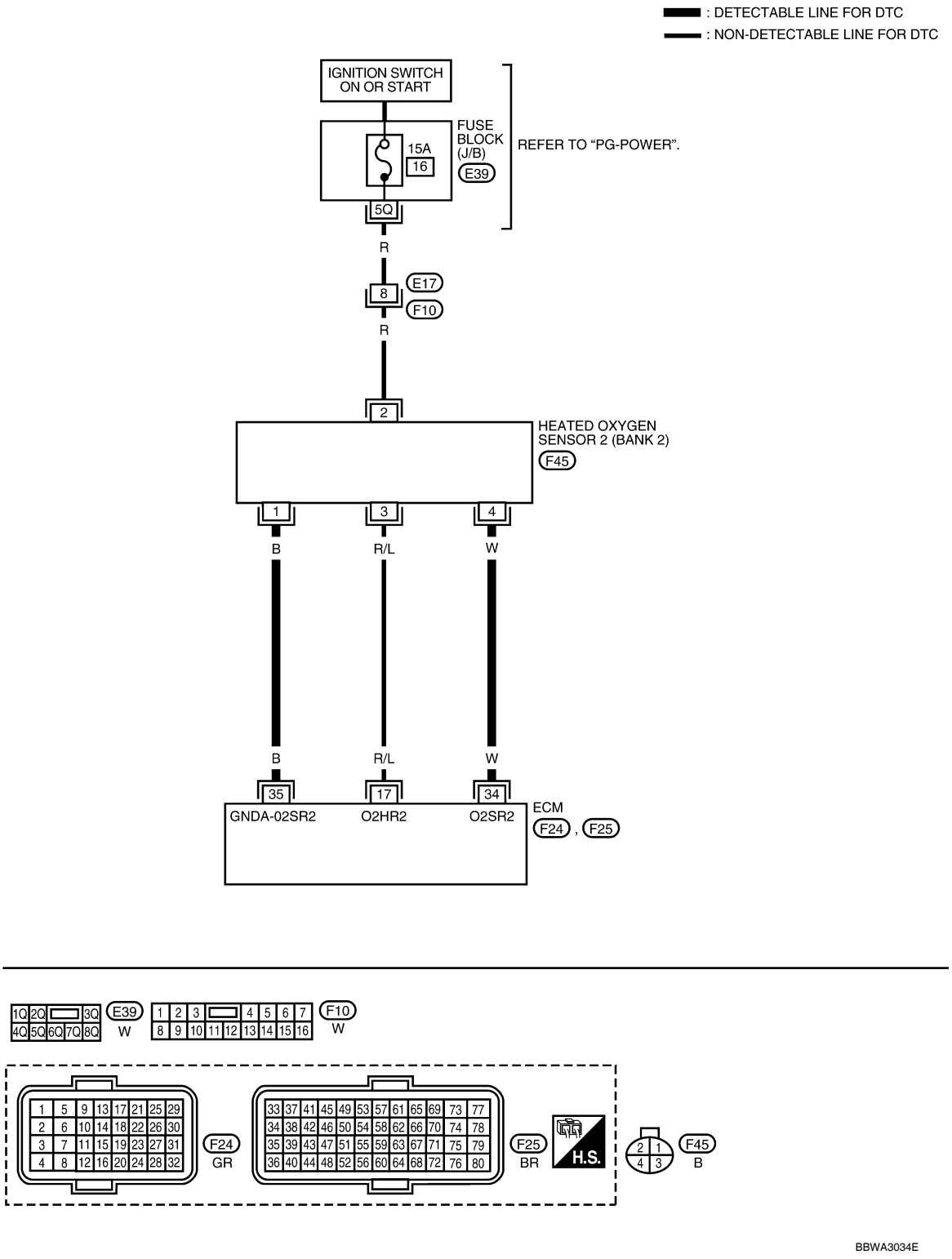

Specification data are reference values and are measured between each terminal and ground.
Pulse signal is measured by CONSULT-III.

CAUTION:

Never use ECM ground terminals when measuring input/output voltage. Doing so may result in damage to the ECM's transistor. Use a ground other than ECM terminals, such as the ground.

TERMINAL NO.	WIRE COLOR	ITEM	CONDITION	DATA (DC Voltage)
17	R/L	Heated oxygen sensor 2 heater (Bank 2)	**[Engine is running]** • Engine speed: Below 3,600 rpm after the following conditions are met. - Engine: After warming up - Keeping the engine speed between 3,500 and 4,000 rpm for 1 minute and at idle for 1 minute under no load.	Approximately 10 V★ 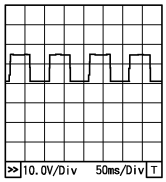 PBIA8148J
			[Ignition switch: ON] • Engine stopped **[Engine is running]** • Engine speed: Above 3,600 rpm.	BATTERY VOLTAGE (11 - 14 V)
34	W	Heated oxygen sensor 2 (Bank 2)	**[Engine is running]** • Revving engine from idle to 3,000 rpm quickly after the following conditions are met. - Engine: After warming up - Keeping the engine speed between 3,500 and 4,000 rpm for 1 minute and at idle for 1 minute under no load.	0 - Approximately 1.0 V
35	B	Sensor ground (Heated oxygen sensor 2)	**[Engine is running]** • **Warm-up condition** • Idle speed	Approximately 0 V

★: Average voltage for pulse signal (Actual pulse signal can be confirmed by oscilloscope.)

Diagnosis Procedure

INFOID:0000000005285928

1. CHECK GROUND CONNECTIONS

1. Turn ignition switch OFF.
2. Loosen and retighten ground screw on the body.
   Refer to EC-1251, "Ground Inspection".

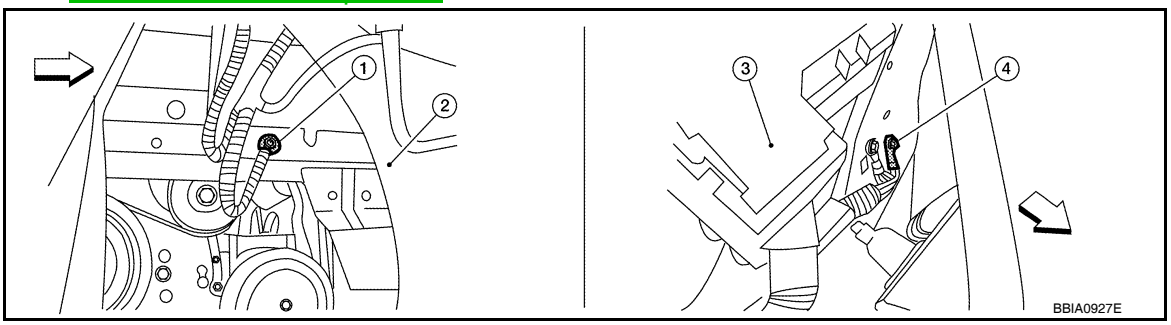

⇦: Vehicle front

1. Body ground E9 (view with front wheel RH and fender protector RH removed.)
2. Washer tank
3. Fuse and fusible link box
4. Body ground E15

OK or NG

OK >> GO TO 2.
NG >> Repair or replace ground connections.

2. CLEAR THE SELF-LEARNING DATA

With CONSULT-III

1. Start engine and warm it up to normal operating temperature.

2. Select “SELF-LEARNING CONT” in “WORK SUPPORT” mode with CONSULT-III.
3. Clear the self-learning control coefficient by touching “CLEAR”.
4. Run engine for at least 10 minutes at idle speed.
   Is the 1st trip DTC P0171, P0174, P0172 or P0175 detected?
   Is it difficult to start engine?

Without CONSULT-III

1. Start engine and warm it up to normal operating temperature.
2. Turn ignition switch OFF.
3. Disconnect mass air flow sensor (1) harness connector, and restart and run engine for at least 5 seconds at idle speed.
- ⇦: Vehicle front
4. Stop engine and reconnect mass air flow sensor harness connector.
5. Check that DTC P0102 is displayed.
6. Erase the DTC memory. Refer to EC-1155, "Emission-related Diagnostic Information".
7. Check that DTC P0000 is displayed.
8. Run engine for at least 10 minutes at idle speed.
   Is the 1st trip DTC P0171, P0172, P0174 or P0175 detected?
   Is it difficult to start engine?

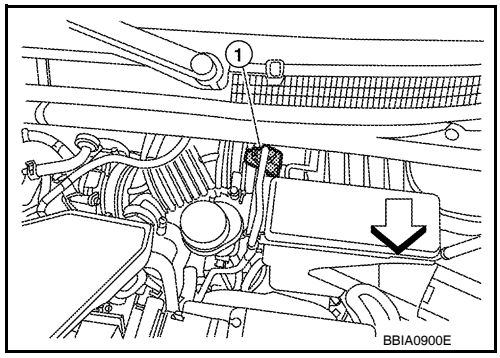

Yes or No

Yes >> Perform trouble diagnosis for DTC P0171, P0174 or P0172, P0175. Refer to EC-275 or EC-281.
No >> GO TO 3.

3. CHECK HO2S2 GROUND CIRCUIT FOR OPEN AND SHORT

1. Turn ignition switch OFF.
2. Disconnect heated oxygen sensor 2 harness connector.
- Heated oxygen sensor 2 (Bank 1) harness connector (1)
- Heated oxygen sensor 2 (Bank 1) (2)
- Heated oxygen sensor 2 (Bank 2) (3)
- Heated oxygen sensor 2 (Bank 2) harness connector (4)
3. Disconnect ECM harness connector.
4. Check harness continuity between ECM terminal 35 and HO2S2 terminal 1. Refer to Wiring Diagram.

   Continuity should exist.

5. Also check harness for short to ground and short to power.

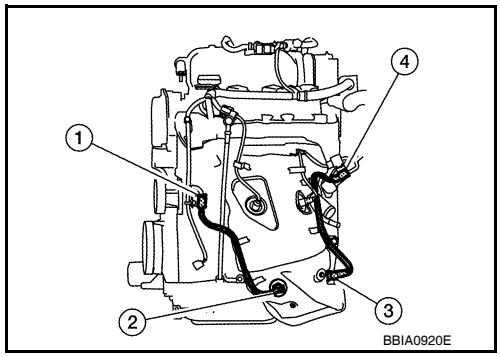

OK or NG

OK >> GO TO 4.
NG >> Repair open circuit or short to ground or short to power in harness or connectors.

4. CHECK HO2S2 INPUT SIGNAL CIRCUIT FOR OPEN AND SHORT

1. Check harness continuity between ECM terminals and HO2S2 terminal as follows.
   Refer to Wiring Diagram.

DTC	Terminal		Bank
	ECM	Sensor	
P0137	33	4	1
P0157	34	4	2

   Continuity should exist.

2. Check harness continuity between the following terminals and ground.
   Refer to Wiring Diagram.

DTC	Terminal		Bank
	ECM	Sensor	
P0137	33	4	1
P0157	34	4	2

Continuity should not exist.

3. Also check harness for short to power.

OK or NG

OK >> GO TO 5.
NG >> Repair open circuit or short to ground or short to power in harness or connectors.

5. CHECK HEATED OXYGEN SENSOR 2

Refer to EC-1383, "Component Inspection".

OK or NG

OK >> GO TO 6.
NG >> Replace malfunctioning heated oxygen sensor 2.

6. CHECK INTERMITTENT INCIDENT

Refer to EC-1245.

>> **INSPECTION END**

Component Inspection

INFOID:0000000005285929

HEATED OXYGEN SENSOR 2

With CONSULT-III

1. Start engine and warm it up to the normal operating temperature.
2. Turn ignition switch OFF and wait at least 10 seconds.
3. Start engine and keep the engine speed between 3,500 and 4,000 rpm for at least 1 minute under no load.
4. Let engine idle for 1 minute.
5. Select “FUEL INJECTION” in “ACTIVE TEST” mode, and select “HO2S2 (B1)/(B2)” as the monitor item with CONSULT-III.
6. Check “HO2S2 (B1)/(B2)” at idle speed when adjusting “FUEL INJECTION” to ±25%.

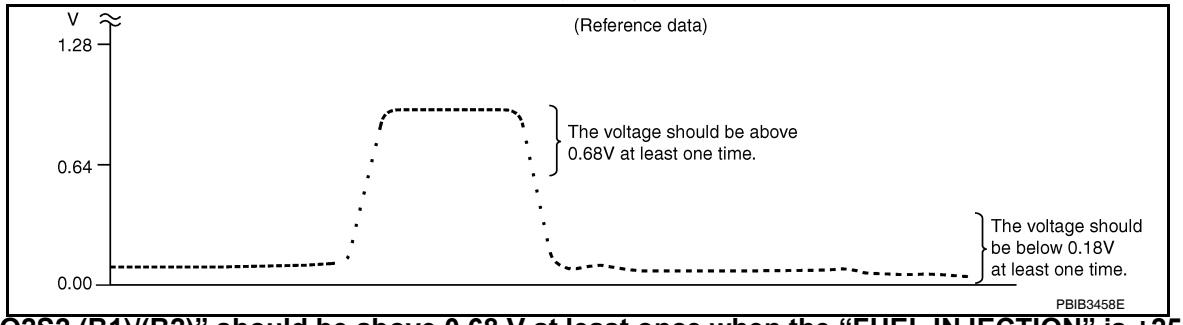

“HO2S2 (B1)/(B2)” should be above 0.68 V at least once when the “FUEL INJECTION” is +25%.
“HO2S2 (B1)/(B2)” should be below 0.18 V at least once when the “FUEL INJECTION” is –25%.

CAUTION:

- **Discard any heated oxygen sensor which has been dropped from a height of more than 0.5 m (19.7 in) onto a hard surface such as a concrete floor; use a new one.**
- **Before installing new oxygen sensor, clean exhaust system threads using oxygen sensor thread cleaner [commercial service tool (J-43897-18 or J-43897-12)] and approved anti-seize lubricant (commercial service tool).**

Without CONSULT-III

1. Start engine and warm it up to the normal operating temperature.

2. Turn ignition switch OFF and wait at least 10 seconds.
3. Start engine and keep the engine speed between 3,500 and 4,000 rpm for at least 1 minute under no load.
4. Let engine idle for 1 minute.
5. Set voltmeter probes between ECM terminal 33 [HO2S2 (B1) signal] or 34 [HO2S2 (B2) signal] and ground.
6. Check the voltage when revving up to 4,000 rpm under no load at least 10 times.
   (Depress and release accelerator pedal as soon as possible.)
   The voltage should be above 0.68 V and below 0.18 V at least once during this procedure.
   If the voltage can be confirmed at step 6, step 7 is not necessary.
7. Keep vehicle idling for 10 minutes, then check voltage. Or check the voltage when coasting from 80 km/h (50 MPH) in D position (CVT) or 3rd gear position (M/T).
   The voltage should be above 0.68 V and below 0.18 V at least once during this procedure.

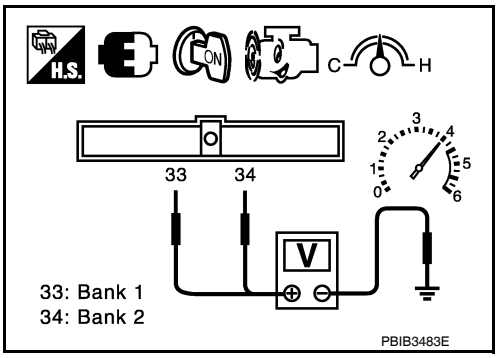

8. If NG, replace heated oxygen sensor 2.
   CAUTION:
   - **Discard any heated oxygen sensor which has been dropped from a height of more than 0.5 m (19.7 in) onto a hard surface such as a concrete floor; use a new one.**
   - **Before installing new oxygen sensor, clean exhaust system threads using oxygen sensor thread cleaner [commercial service tool (J-43897-18 or J-43897-12)] and approved anti-seize lubricant (commercial service tool).**

Removal and Installation

INFOID:0000000005285930

HEATED OXYGEN SENSOR 2

Refer to EM-140

DTC P0171, P0174 FUEL INJECTION SYSTEM FUNCTION

On Board Diagnosis Logic

INFOID:0000000005285931

With the Air/Fuel Mixture Ratio Self-Learning Control, the actual mixture ratio can be brought closely to the theoretical mixture ratio based on the mixture ratio feedback signal from the air fuel ratio (A/F) sensor 1. The ECM calculates the necessary compensation to correct the offset between the actual and the theoretical ratios. In case the amount of the compensation value is extremely large (The actual mixture ratio is too lean.), the ECM judges the condition as the fuel injection system malfunction and illuminates the MIL (2 trip detection logic).

Sensor	Input Signal to ECM	ECM function	Actuator
Air fuel ratio (A/F) sensor 1	Density of oxygen in exhaust gas (Mixture ratio feedback signal)	Fuel injection control	Fuel injector

DTC No.	Trouble diagnosis name	DTC detecting condition	Possible cause
P0171 0171 (Bank 1)	Fuel injection system too lean	• Fuel injection system does not operate properly. • The amount of mixture ratio compensation is too large. (The mixture ratio is too lean.)	• Intake air leaks • Air fuel ratio (A/F) sensor 1 • Fuel injector • Exhaust gas leaks • Incorrect fuel pressure • Lack of fuel • Mass air flow sensor • Incorrect PCV hose connection
P0174 0174 (Bank 2)			

DTC Confirmation Procedure

INFOID:0000000005285932

NOTE:
If DTC Confirmation Procedure has been previously conducted, always turn ignition switch OFF and wait at least 10 seconds before conducting the next test.

WITH CONSULT-III

1. Start engine and warm it up to normal operating temperature.
2. Turn ignition switch OFF and wait at least 10 seconds.
3. Turn ignition switch ON and select “SELF-LEARNING CONT” in “WORK SUPPORT” mode with CONSULT-III.
4. Clear the self-learning control coefficient by touching “CLEAR”.
5. Start engine.
   If it is difficult to start engine, the fuel injection system has a malfunction.
   Performing the following procedure is advised.

a. Crank engine while depressing accelerator pedal.
   NOTE:
   When depressing accelerator pedal three-fourths (3/4) or more, the control system does not start the engine. Do not depress accelerator pedal too much.

b. If engine starts, go to EC-1390, "Diagnosis Procedure".
   If engine does not start, check exhaust and intake air leakage visually.

6. Keep engine at idle for at least 5 minutes.
7. Check 1st trip DTC.
8. The 1st trip DTC P0171 or P0174 should be detected at this stage, if a malfunction exists. If so, go to EC-1390, "Diagnosis Procedure".
   NOTE:
   If 1st trip DTC is not detected during above procedure, performing the following procedure is advised.

a. Turn ignition switch OFF and wait at least 10 seconds.
b. Start engine.
c. Maintain the following conditions for at least 10 consecutive minutes.
   Hold the accelerator pedal as steady as possible.

VHCL SPEED SE	50 - 120 km/h (31 - 75 MPH)

CAUTION:
Always drive vehicle at a safe speed.

d. Check 1st trip DTC.
e. If 1st trip DTC is detected, go to EC-1390, "Diagnosis Procedure".

WITH GST

1. Start engine and warm it up to normal operating temperature.
2. Turn ignition switch OFF and wait at least 10 seconds.
3. Disconnect mass air flow sensor (1) harness connector.

• ⇦: Vehicle front

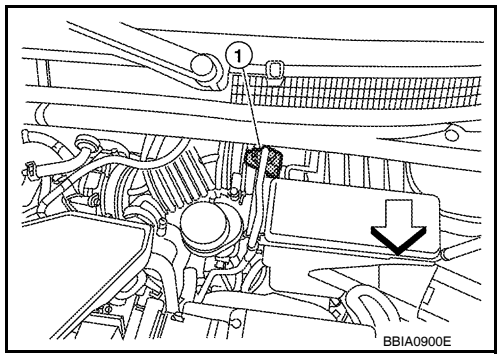

4. Restart engine and let idle for at least 5 seconds.
5. Stop engine and reconnect mass air flow sensor harness connector.
6. Select Service $03 with GST. Check that DTC P0102 is detected.
7. Select Service $04 with GST and erase the DTC P0102.
8. Start engine.
   If it is difficult to start engine, the fuel injection system has a malfunction.
   Performing the following procedure is advised.

a. Crank engine while depressing accelerator pedal.
   NOTE:
   When depressing accelerator pedal three-fourths (3/4) or more, the control system does not start the engine. Do not depress accelerator pedal too much.
b. If engine starts, go to EC-1390, "Diagnosis Procedure".
   If engine does not start, check exhaust and intake air leakage visually.

9. Keep engine at idle for at least 5 minutes.
10. Check 1st trip DTC.
11. The 1st trip DTC P0171 or P0174 should be detected at this stage, if a malfunction exists. If so, go to EC-1390, "Diagnosis Procedure".
    NOTE:
    If 1st trip DTC is not detected during above procedure, performing the following procedure is advised.

a. Turn ignition switch OFF and wait at least 10 seconds.
b. Start engine.
c. Maintain the following conditions for at least 10 consecutive minutes.
   Hold the accelerator pedal as steady as possible.

VHCL SPEED SE	50 - 120 km/h (31 - 75 MPH)

CAUTION:
Always drive vehicle at a safe speed.

d. Check 1st trip DTC.
e. If 1st trip DTC is detected, go to EC-1390, "Diagnosis Procedure".

Wiring Diagram

INFOID:0000000005285933

BANK 1

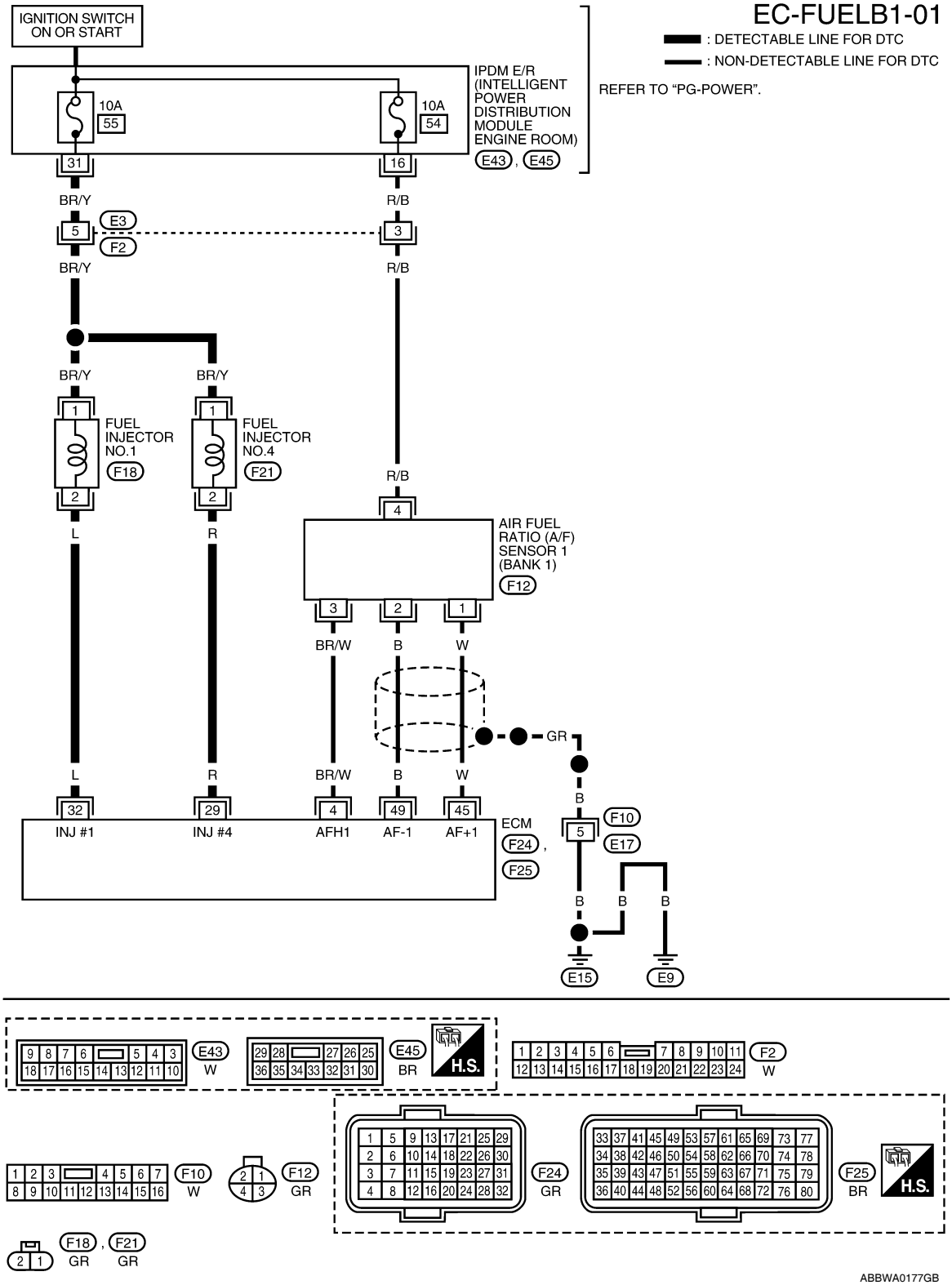

Specification data are reference values and are measured between each terminal and ground.
Pulse signal is measured by CONSULT-III.

CAUTION:

Never use ECM ground terminals when measuring input/output voltage. Doing so may result in damage to the ECM's transistor. Use a ground other than ECM terminals, such as the ground.

TERMINAL NO.	WIRE COLOR	ITEM	CONDITION	DATA (DC Voltage)
4	BR/W	A/F sensor 1 heater (Bank 1)	**[Engine is running]** • **Warm-up condition** • Idle speed (More than 140 seconds after starting engine)	Approximately 2.9 - 8.8 V★ 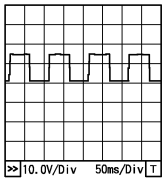 PBIA8148J
29 32	R L	Fuel injector No. 4 Fuel injector No. 1	**[Engine is running]** • **Warm-up condition** • Idle speed **NOTE:** The pulse cycle changes depending on rpm at idle	BATTERY VOLTAGE (11 - 14 V)★ 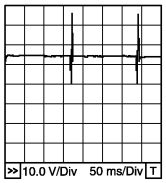 PBIB0529E
			[Engine is running] • **Warm-up condition** • Engine speed: 2,000 rpm	BATTERY VOLTAGE (11 - 14 V)★ 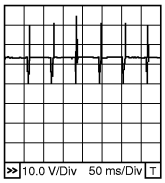 PBIA4943J
45	W	A/F sensor 1 (Bank 1)	**[Engine is running]** • **Warm-up condition** • Engine speed: 2,000 rpm	Approximately 1.8 V Output voltage varies with air fuel ratio.
49	B	A/F sensor 1 (Bank 1)	**[Ignition switch: ON]**	Approximately 2.2 V

★: Average voltage for pulse signal (Actual pulse signal can be confirmed by oscilloscope.)

BANK 2

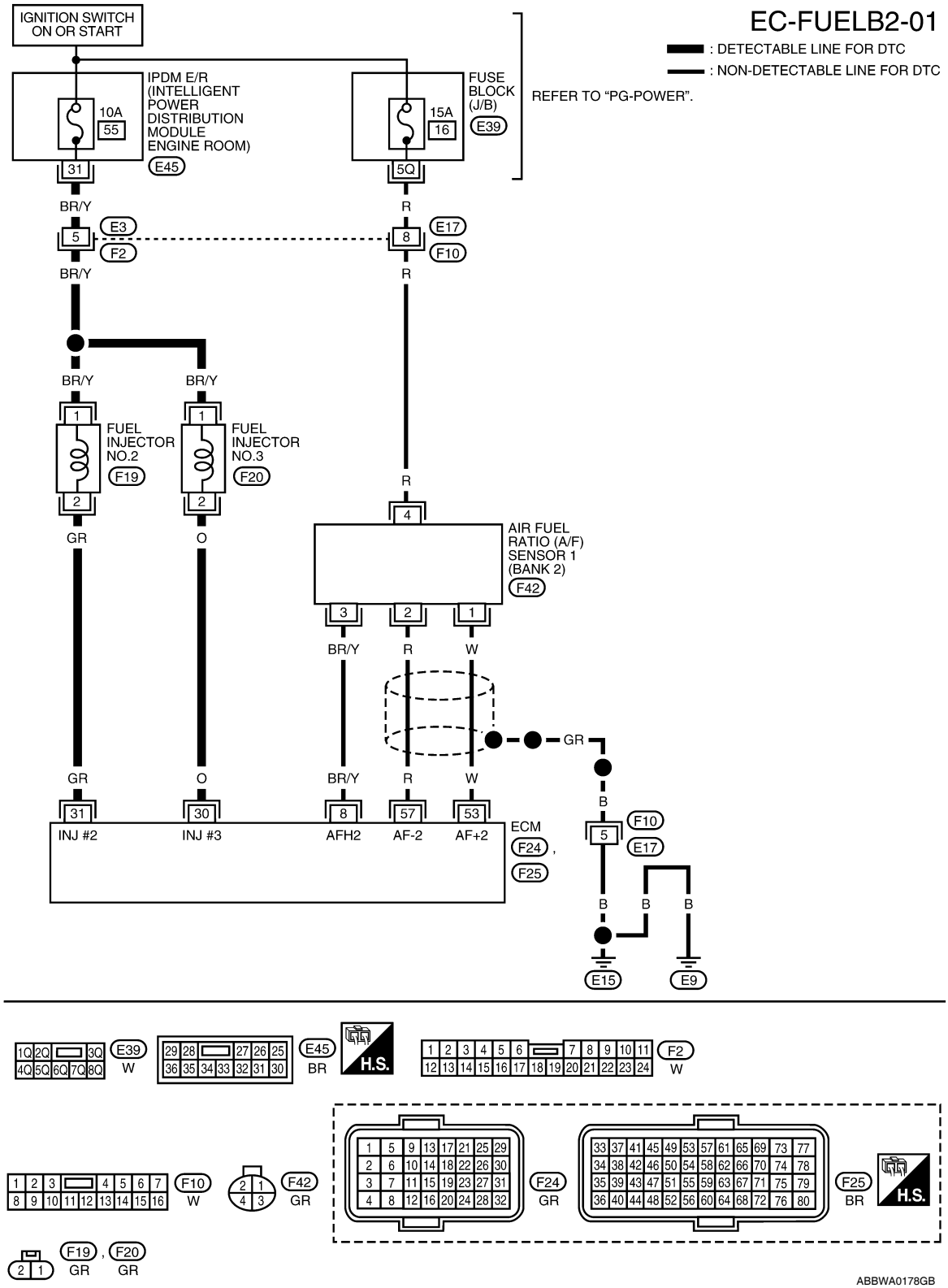

Specification data are reference values and are measured between each terminal and ground.
Pulse signal is measured by CONSULT-III.

CAUTION:

Never use ECM ground terminals when measuring input/output voltage. Doing so may result in damage to the ECM's transistor. Use a ground other than ECM terminals, such as the ground.

TERMINAL NO.	WIRE COLOR	ITEM	CONDITION	DATA (DC Voltage)
8	BR/Y	A/F sensor 1 heater (Bank 2)	**[Engine is running]** • **Warm-up condition** • Idle speed (More than 140 seconds after starting engine)	Approximately 2.9 - 8.8 V★ 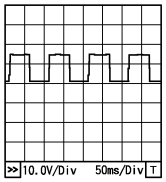 PBIA8148J
30 31	O GR	Fuel injector No. 3 Fuel injector No. 2	**[Engine is running]** • **Warm-up condition** • Idle speed **NOTE:** The pulse cycle changes depending on rpm at idle	BATTERY VOLTAGE (11 - 14 V)★ 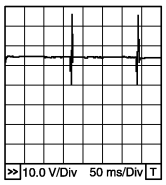 PBIB0529E
			[Engine is running] • **Warm-up condition** • Engine speed: 2,000 rpm	BATTERY VOLTAGE (11 - 14 V)★ 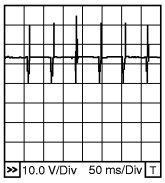 PBIA4943J
53	W	A/F sensor 1 (Bank 2)	**[Engine is running]** • **Warm-up condition** • Engine speed: 2,000 rpm	Approximately 1.8 V Output voltage varies with air fuel ratio.
57	R	A/F sensor 1 (Bank 2)	**[Ignition switch: ON]**	Approximately 2.2 V

★: Average voltage for pulse signal (Actual pulse signal can be confirmed by oscilloscope.)

Diagnosis Procedure

INFOID:0000000005285934

1. CHECK EXHAUST GAS LEAK

1. Start engine and run it at idle.
2. Listen for an exhaust gas leak before three way catalyst (manifold).

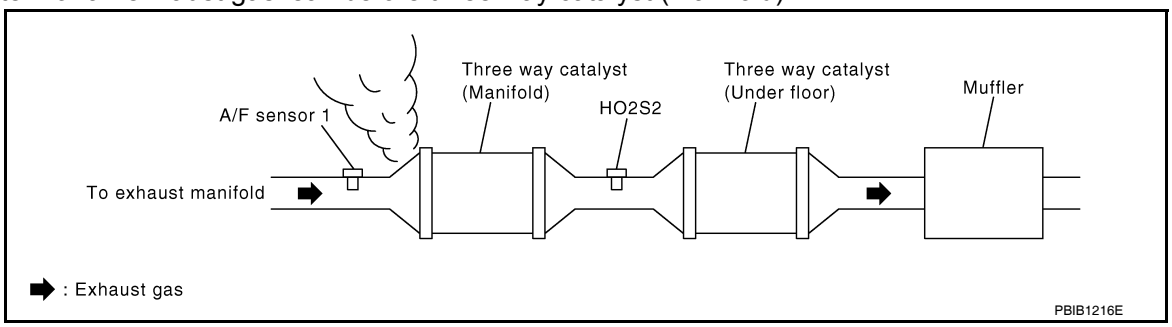

OK or NG

OK >> GO TO 2.
NG >> Repair or replace.

2. CHECK FOR INTAKE AIR LEAK AND PCV HOSE

1. Listen for an intake air leak after the mass air flow sensor.

2. Check PCV hose connection.

OK or NG

OK >> GO TO 3.
NG >> Repair or replace.

3. CHECK AIR FUEL RATIO (A/F) SENSOR 1 CIRCUIT FOR OPEN AND SHORT

1. Turn ignition switch OFF.
2. Disconnect air fuel ratio (A/F) sensor 1 harness connector.
- Air fuel ratio (A/F) sensor 1 (Bank 1) harness connector (1)
- Air fuel ratio (A/F) sensor 1 (Bank 1) (2)
- Air fuel ratio (A/F) sensor 1 (Bank 2) (3)
- Air fuel ratio (A/F) sensor 1 (Bank 2) harness connector (4)
3. Disconnect ECM harness connector.
4. Check harness continuity between the following terminals. Refer to Wiring Diagram.

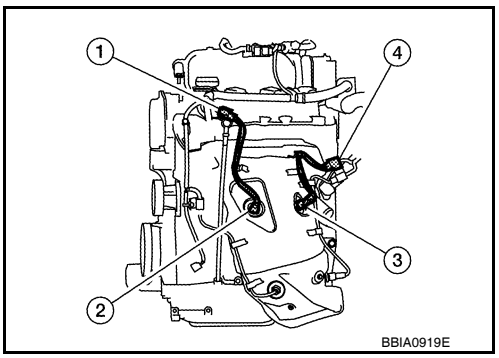

Bank	A/F sensor 1 terminal	ECM terminal
1	1	45
	2	49
2	1	53
	2	57

Continuity should exist.

5. Check harness continuity between the following terminals and ground. Refer to Wiring Diagram.

Bank 1		Bank 2	
A/F sensor terminal	ECM terminal	A/F sensor terminal	ECM terminal
1	45	1	53
2	49	2	57

Continuity should not exist.

6. Also check harness for short to power.

OK or NG

OK >> GO TO 4.
NG >> Repair open circuit or short to ground or short to power in harness or connectors.

4. CHECK FUEL PRESSURE

1. Release fuel pressure to zero. Refer to EC-1195, "Fuel Pressure Check".
2. Install fuel pressure gauge and check fuel pressure. Refer to EC-1195, "Fuel Pressure Check".

At idling: Approximately 350 kPa (3.57 kg/cm^2, 51 psi)

OK or NG

OK >> GO TO 6.
NG >> GO TO 5.

5. DETECT MALFUNCTIONING PART

Check the following.
- Fuel pump and circuit (Refer to EC-1652.)
- Fuel pressure regulator (Refer to EC-1195, "Fuel Pressure Check".)
- Fuel lines (Refer to EM-148.)
- Fuel filter for clogging

>> Repair or replace.

6. CHECK MASS AIR FLOW SENSOR

With CONSULT-III

1. Install all removed parts.
2. Start engine and warm it up to normal operating temperature.
3. Check “MASS AIR FLOW” in “DATA MONITOR” mode with CONSULT-III.

At idling : 1.0 - 4.0 g·m/sec
At 2,500 rpm : 4.0 - 10.0 g·m/sec

With GST

1. Install all removed parts.
2. Start engine and warm it up to normal operating temperature.
3. Check mass air flow sensor signal in Service $01 with GST.

At idling : 1.0 - 4.0 g·m/sec
At 2,500 rpm : 4.0 - 10.0 g·m/sec

OK or NG

OK >> GO TO 7.
NG >> Check connectors for rusted terminals or loose connections in the mass air flow sensor circuit or ground. Refer to EC-1282.

7. CHECK FUNCTION OF FUEL INJECTORS

With CONSULT-III

1. Let engine idle.
2. Perform “POWER BALANCE” in “ACTIVE TEST” mode with CONSULT-III.
3. Check that each circuit produces a momentary engine speed drop.

Without CONSULT-III

1. Let engine idle.
2. Listen to each fuel injector operating sound.

Clicking noise should be heard.

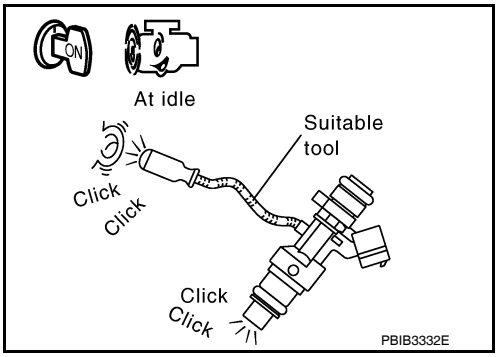

OK or NG

OK >> GO TO 8.
NG >> Perform trouble diagnosis for EC-1647.

8. CHECK FUEL INJECTOR

1. Confirm that the engine is cooled down and there are no fire hazards near the vehicle.
2. Turn ignition switch OFF.
3. Reconnect all harness connectors disconnected.
4. Remove fuel tube assembly. Refer to EM-148.
   Keep fuel hose and all fuel injectors connected to fuel tube.
   The fuel injector harness connectors should remain connected.
5. Disconnect all ignition coil harness connectors.
6. Prepare pans or saucers under each fuel injector.

7. Crank engine for approximately 3 seconds. Check that fuel sprays out from fuel injectors.

Fuel should be sprayed evenly for each fuel injector.

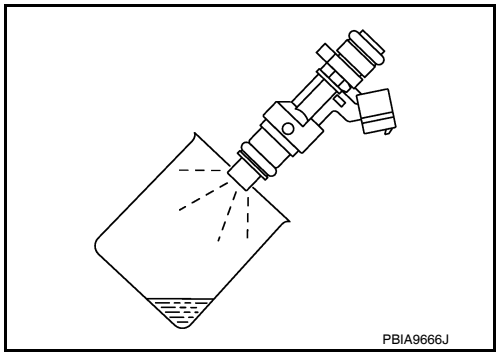

OK or NG

OK >> GO TO 9.
NG >> Replace fuel injectors from which fuel does not spray out. Always replace O-ring with new ones.

9. CHECK INTERMITTENT INCIDENT

Refer to EC-1245.

>> **INSPECTION END**

DTC P0172, P0175 FUEL INJECTION SYSTEM FUNCTION

On Board Diagnosis Logic

INFOID:0000000005285935

With the Air/Fuel Mixture Ratio Self-Learning Control, the actual mixture ratio can be brought closely to the theoretical mixture ratio based on the mixture ratio feedback signal from the air fuel ratio (A/F) sensor 1. The ECM calculates the necessary compensation to correct the offset between the actual and the theoretical ratios. In case the amount of the compensation value is extremely large (The actual mixture ratio is too rich.), the ECM judges the condition as the fuel injection system malfunction and illuminates the MIL (2 trip detection logic).

Sensor	Input Signal to ECM	ECM function	Actuator
Air fuel ratio (A/F) sensor 1	Density of oxygen in exhaust gas (Mixture ratio feedback signal)	Fuel injection control	Fuel injector

DTC No.	Trouble diagnosis name	DTC detecting condition	Possible cause
P0172 0172 (Bank 1)	Fuel injection system too rich	• Fuel injection system does not operate properly. • The amount of mixture ratio compensation is too large. (The mixture ratio is too rich.)	• Air fuel ratio (A/F) sensor 1 • Fuel injector • Exhaust gas leaks • Incorrect fuel pressure • Mass air flow sensor
P0175 0175 (Bank 2)			

DTC Confirmation Procedure

INFOID:0000000005285936

NOTE:
If DTC Confirmation Procedure has been previously conducted, always turn ignition switch OFF and wait at least 10 seconds before conducting the next test.

WITH CONSULT-III

1. Start engine and warm it up to normal operating temperature.
2. Turn ignition switch OFF and wait at least 10 seconds.
3. Turn ignition switch ON and select “SELF-LEARNING CONT” in “WORK SUPPORT” mode with CONSULT-III.
4. Clear the self-learning control coefficient by touching “CLEAR”.
5. Start engine.
   If it is difficult to start engine, the fuel injection system has a malfunction.
   Performing the following procedure is advised.

a. Crank engine while depressing accelerator pedal.
   NOTE:
   When depressing accelerator pedal three-fourths (3/4) or more, the control system does not start the engine. Do not depress accelerator pedal too much.

b. If engine starts, go to EC-1399, "Diagnosis Procedure".
   If engine does not start, check exhaust and intake air leakage visually.

6. Keep engine at idle for at least 5 minutes.
7. Check 1st trip DTC.
8. The 1st trip DTC P0172 or P0175 should be detected at this stage, if a malfunction exists. If so, go to EC-1399, "Diagnosis Procedure".
   NOTE:
   If 1st trip DTC is not detected during above procedure, performing the following procedure is advised.

a. Turn ignition switch OFF and wait at least 10 seconds.
b. Start engine.
c. Maintain the following conditions for at least 10 consecutive minutes.
   Hold the accelerator pedal as steady as possible.

VHCL SPEED SE	50 - 120 km/h (31 - 75 MPH)

CAUTION:
Always drive vehicle at a safe speed.

d. Check 1st trip DTC.
e. If 1st trip DTC is detected, go to EC-1399, "Diagnosis Procedure".

WITH GST

1. Start engine and warm it up to normal operating temperature.
2. Turn ignition switch OFF and wait at least 10 seconds.
3. Disconnect mass air flow sensor (1) harness connector.

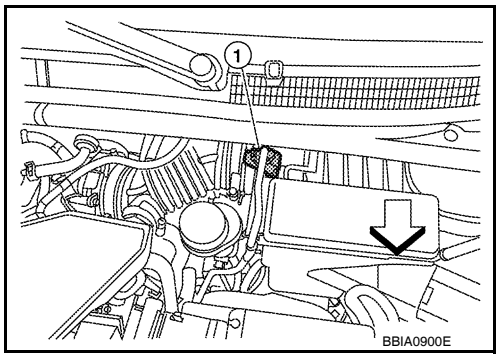

- ⇦: Vehicle front

4. Restart engine and let idle for at least 5 seconds.
5. Stop engine and reconnect mass air flow sensor harness connector.
6. Select Service $03 with GST. Check that DTC P0102 is detected.
7. Select Service $04 with GST and erase the DTC P0102.
8. Start engine.
   If it is difficult to start engine, the fuel injection system has a malfunction.
   Performing the following procedure is advised.

a. Crank engine while depressing accelerator pedal.
   NOTE:
   When depressing accelerator pedal three-fourths (3/4) or more, the control system does not start the engine. Do not depress accelerator pedal too much.
b. If engine starts, go to EC-1399, "Diagnosis Procedure".
   If engine does not start, check exhaust and intake air leakage visually.

9. Keep engine at idle for at least 5 minutes.
10. Check 1st trip DTC.
11. The 1st trip DTC P0172 or P0175 should be detected at this stage, if a malfunction exists. If so, go to EC-1399, "Diagnosis Procedure".
    NOTE:
    If 1st trip DTC is not detected during above procedure, performing the following procedure is advised.

a. Turn ignition switch OFF and wait at least 10 seconds.
b. Start engine.
c. Maintain the following conditions for at least 10 consecutive minutes.
   Hold the accelerator pedal as steady as possible.

VHCL SPEED SE	50 - 120 km/h (31 - 75 MPH)

CAUTION:
Always drive vehicle at a safe speed.

d. Check 1st trip DTC.
e. If 1st trip DTC is detected, go to EC-1399, "Diagnosis Procedure".

Wiring Diagram

INFOID:0000000005285937

BANK 1

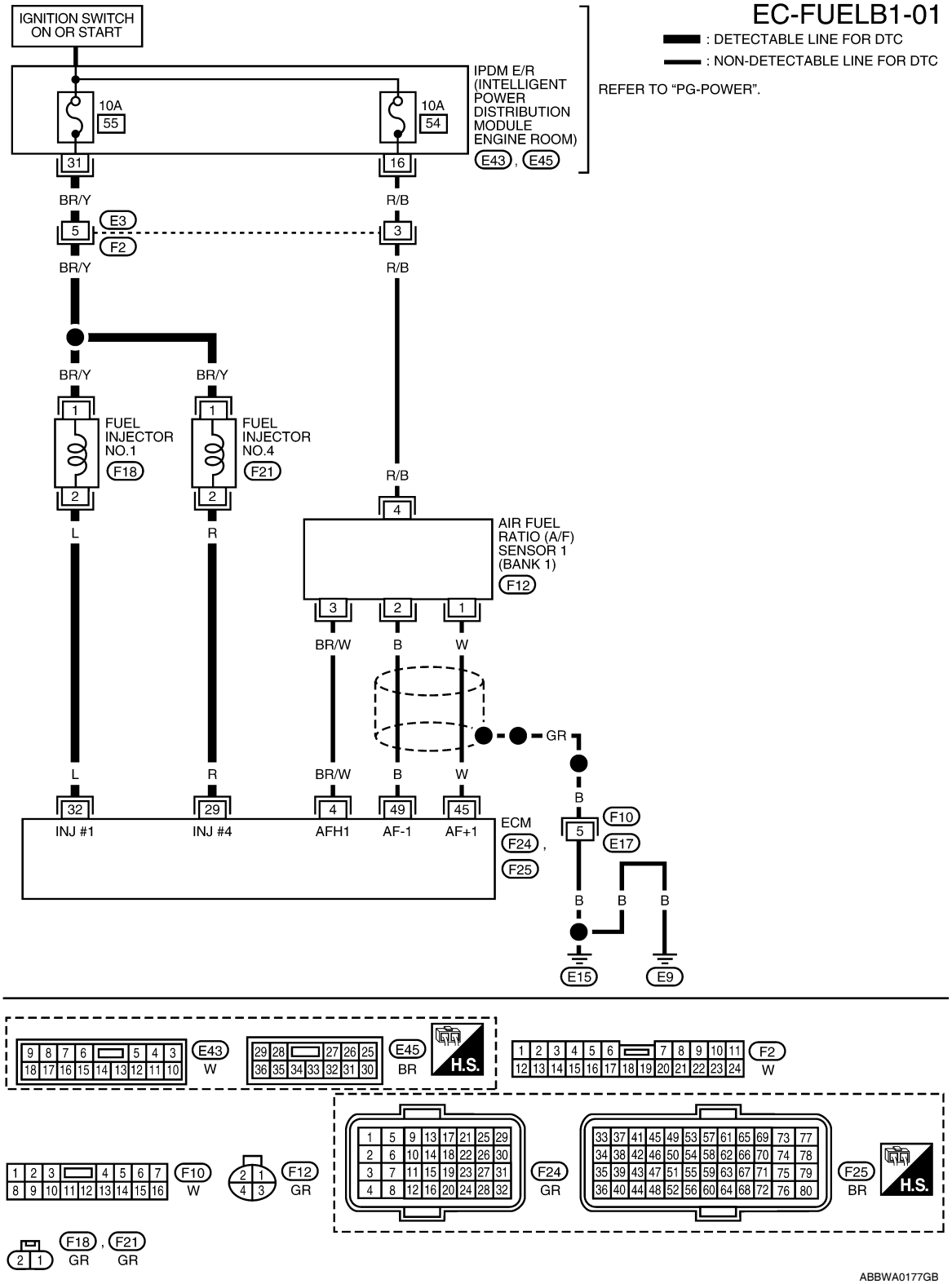

Specification data are reference values and are measured between each terminal and ground.
Pulse signal is measured by CONSULT-III.

CAUTION:

Never use ECM ground terminals when measuring input/output voltage. Doing so may result in damage to the ECM's transistor. Use a ground other than ECM terminals, such as the ground.

TERMINAL NO.	WIRE COLOR	ITEM	CONDITION	DATA (DC Voltage)
4	BR/W	A/F sensor 1 heater (Bank 1)	**[Engine is running]** • **Warm-up condition** • Idle speed (More than 140 seconds after starting engine)	Approximately 2.9 - 8.8 V★ 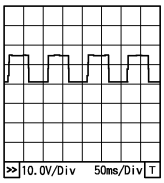 PBIA8148J
29 32	R L	Fuel injector No. 4 Fuel injector No. 1	**[Engine is running]** • **Warm-up condition** • Idle speed **NOTE:** The pulse cycle changes depending on rpm at idle	BATTERY VOLTAGE (11 - 14 V)★ 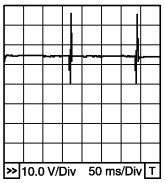 PBIB0529E
			[Engine is running] • **Warm-up condition** • Engine speed: 2,000 rpm	BATTERY VOLTAGE (11 - 14 V)★ 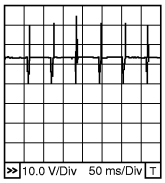 PBIA4943J
45	W	A/F sensor 1 (Bank 1)	**[Engine is running]** • **Warm-up condition** • Engine speed: 2,000 rpm	Approximately 1.8 V Output voltage varies with air fuel ratio.
49	B	A/F sensor 1 (Bank 1)	**[Ignition switch: ON]**	Approximately 2.2 V

★: Average voltage for pulse signal (Actual pulse signal can be confirmed by oscilloscope.)

BANK 2

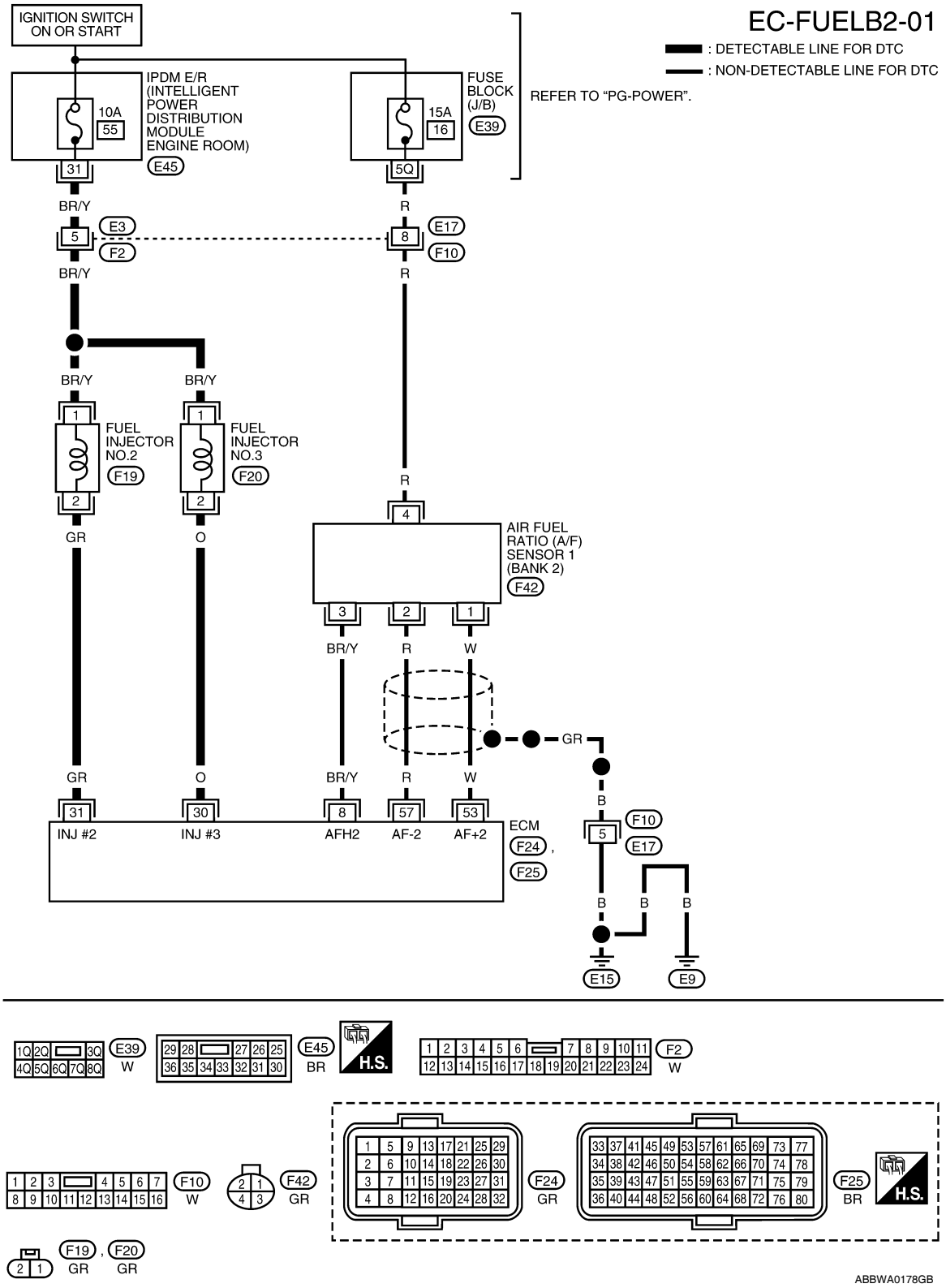

Specification data are reference values and are measured between each terminal and ground.
Pulse signal is measured by CONSULT-III.

CAUTION:

Never use ECM ground terminals when measuring input/output voltage. Doing so may result in damage to the ECM's transistor. Use a ground other than ECM terminals, such as the ground.

TERMINAL NO.	WIRE COLOR	ITEM	CONDITION	DATA (DC Voltage)
8	BR/Y	A/F sensor 1 heater (Bank 2)	**[Engine is running]** • **Warm-up condition** • Idle speed (More than 140 seconds after starting engine)	Approximately 2.9 - 8.8 V★ 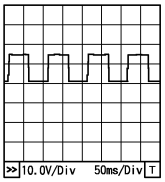 PBIA8148J
30 31	O GR	Fuel injector No. 3 Fuel injector No. 2	**[Engine is running]** • **Warm-up condition** • Idle speed **NOTE:** The pulse cycle changes depending on rpm at idle	BATTERY VOLTAGE (11 - 14 V)★ 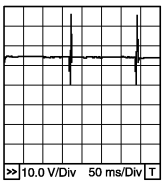 PBIB0529E
			[Engine is running] • **Warm-up condition** • Engine speed: 2,000 rpm	BATTERY VOLTAGE (11 - 14 V)★ 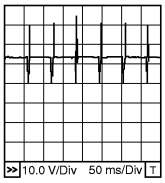 PBIA4943J
53	W	A/F sensor 1 (Bank 2)	**[Engine is running]** • **Warm-up condition** • Engine speed: 2,000 rpm	Approximately 1.8 V Output voltage varies with air fuel ratio.
57	R	A/F sensor 1 (Bank 2)	**[Ignition switch: ON]**	Approximately 2.2 V

★: Average voltage for pulse signal (Actual pulse signal can be confirmed by oscilloscope.)

Diagnosis Procedure

INFOID:0000000005285938

1. CHECK EXHAUST GAS LEAK

1. Start engine and run it at idle.
2. Listen for an exhaust gas leak before three way catalyst (manifold).

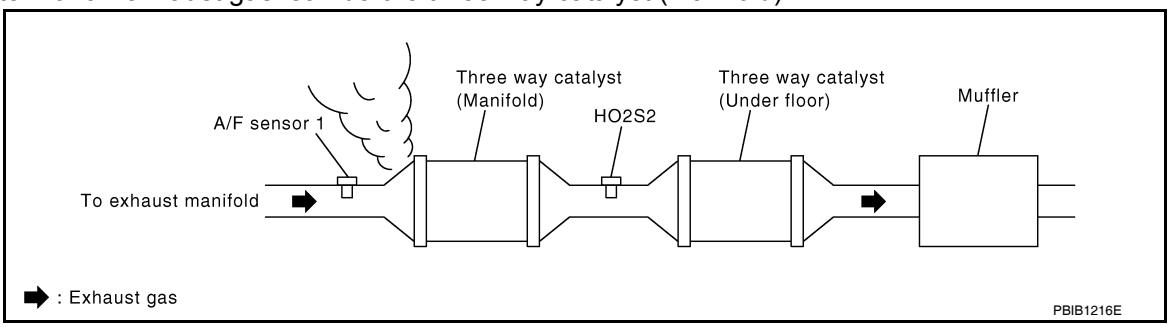

OK or NG

OK >> GO TO 2.
NG >> Repair or replace.

2. CHECK FOR INTAKE AIR LEAK AND PCV HOSE

1. Listen for an intake air leak after the mass air flow sensor.

2. Check PCV hose connection.

OK or NG

OK >> GO TO 3.
NG >> Repair or replace.

3. CHECK AIR FUEL RATIO (A/F) SENSOR 1 CIRCUIT FOR OPEN AND SHORT

1. Turn ignition switch OFF.
2. Disconnect air fuel ratio (A/F) sensor 1 harness connector.
- Air fuel ratio (A/F) sensor 1 (Bank 1) harness connector (1)
- Air fuel ratio (A/F) sensor 1 (Bank 1) (2)
- Air fuel ratio (A/F) sensor 1 (Bank 2) (3)
- Air fuel ratio (A/F) sensor 1 (Bank 2) harness connector (4)
3. Disconnect ECM harness connector.
4. Check harness continuity between the following terminals. Refer to Wiring Diagram.

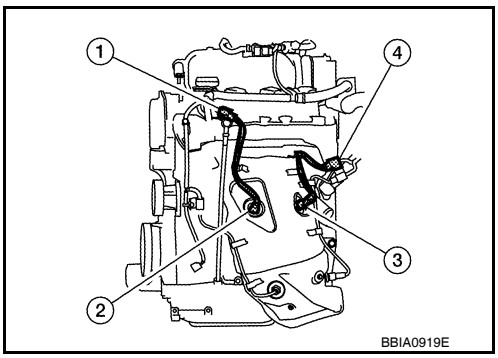

Bank	A/F sensor 1 terminal	ECM terminal
1	1	45
	2	49
2	1	53
	2	57

Continuity should exist.

5. Check harness continuity between the following terminals and ground. Refer to Wiring Diagram.

Bank 1		Bank 2	
A/F sensor terminal	ECM terminal	A/F sensor terminal	ECM terminal
1	45	1	53
2	49	2	57

Continuity should not exist.

6. Also check harness for short to power.

OK or NG

OK >> GO TO 4.
NG >> Repair open circuit or short to ground or short to power in harness or connectors.

4. CHECK FUEL PRESSURE

1. Release fuel pressure to zero. Refer to EC-1195, "Fuel Pressure Check".
2. Install fuel pressure gauge and check fuel pressure. Refer to EC-1195, "Fuel Pressure Check".

At idling: Approximately 350 kPa (3.57 kg/cm^2, 51 psi)

OK or NG

OK >> GO TO 6.
NG >> GO TO 5.

5. DETECT MALFUNCTIONING PART

Check the following.
- Fuel pump and circuit (Refer to EC-1652.)
- Fuel pressure regulator (Refer to EC-1195, "Fuel Pressure Check".)

>> Repair or replace.

6. CHECK MASS AIR FLOW SENSOR

With CONSULT-III
1. Install all removed parts.
2. Start engine and warm it up to normal operating temperature.
3. Check “MASS AIR FLOW” in “DATA MONITOR” mode with CONSULT-III.

At idling : 1.0 - 4.0 g·m/sec
At 2,500 rpm : 4.0 - 10.0 g·m/sec

With GST
1. Install all removed parts.
2. Start engine and warm it up to normal operating temperature.
3. Check mass air flow sensor signal in Service $01 with GST.

At idling : 1.0 - 4.0 g·m/sec
At 2,500 rpm : 4.0 - 10.0 g·m/sec

OK or NG
OK >> GO TO 7.
NG >> Check connectors for rusted terminals or loose connections in the mass air flow sensor circuit or ground. Refer to EC-1282.

7. CHECK FUNCTION OF FUEL INJECTORS

With CONSULT-III
1. Let engine idle.
2. Perform “POWER BALANCE” in “ACTIVE TEST” mode with CONSULT-III.
3. Check that each circuit produces a momentary engine speed drop.

Without CONSULT-III
1. Let engine idle.
2. Listen to each fuel injector operating sound.

Clicking noise should be heard.

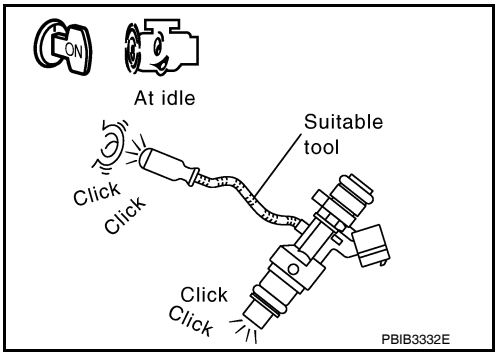

OK or NG
OK >> GO TO 8.
NG >> Perform trouble diagnosis for EC-1647.

8. CHECK FUEL INJECTOR

1. Remove fuel injector assembly. Refer to EM-148.
   Keep fuel hose and all fuel injectors connected to fuel tube.
2. Confirm that the engine is cooled down and there are no fire hazards near the vehicle.
3. Disconnect all ignition coil harness connectors.
4. Prepare pans or saucers under each fuel injector.
5. Crank engine for approximately 3 seconds.
   Check that fuel does not drip from fuel injectors.

OK or NG
OK (Does not drip.)>>GO TO 9.
NG (Drips.)>>Replace the fuel injectors from which fuel is dripping. Always replace O-ring with new ones.

9. CHECK INTERMITTENT INCIDENT

Refer to EC-1245.

>> **INSPECTION END**

DTC P0181 FTT SENSOR

Component Description

INFOID:0000000005285939

The fuel tank temperature sensor (4) is used to detect the fuel temperature inside the fuel tank. The sensor modifies a voltage signal from the ECM. The modified signal returns to the ECM as the fuel temperature input. The sensor uses a thermistor which is sensitive to the change in temperature. The electrical resistance of the thermistor decreases as temperature increases.

- Fuel level sensor unit and fuel pump (1)
- Fuel pressure regulator (2)
- Fuel level sensor (3)

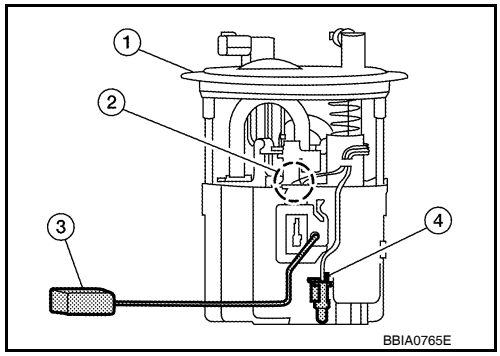

<Reference data>

Fluid temperature [°C (°F)]	Voltage* (V)	Resistance (kΩ)
20 (68)	3.5	2.3 - 2.7
50 (122)	2.2	0.79 - 0.90

*: This data is reference values and is measured between ECM terminal 95 (Fuel tank temperature sensor) and ground.

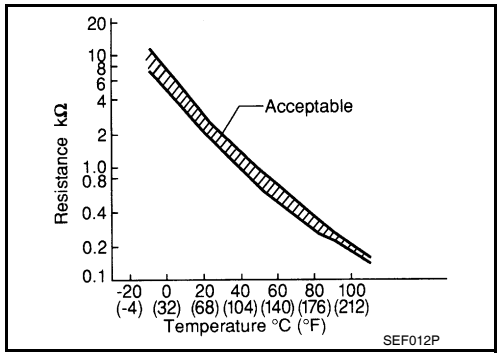

CAUTION:

Never use ECM ground terminals when measuring input/output voltage. Doing so may result damage the ECM's transistor. Use ground other than ECM, such as ground.

On Board Diagnosis Logic

INFOID:0000000005285940

DTC No.	Trouble diagnosis name	DTC detecting condition	Possible cause
P0181 0181	Fuel tank temperature sensor circuit range/performance	Rationally incorrect voltage from the sensor is sent to ECM, compared with the voltage signals from engine coolant temperature sensor and intake air temperature sensor.	• Harness or connectors (Fuel tank temperature sensor circuit is open or shorted) • Fuel tank temperature sensor

DTC Confirmation Procedure

INFOID:0000000005285941

NOTE:

If DTC Confirmation Procedure has been previously conducted, always turn ignition switch OFF and wait at least 10 seconds before conducting the next test.

WITH CONSULT-III

1. Turn ignition switch ON wait at least 10 seconds.
2. Check 1st trip DTC.
   If 1st trip DTC is detected, go to EC-1403, "Diagnosis Procedure".
   If 1st trip DTC is not detected, go to following step.
3. Select “DATA MONITOR” mode with CONSULT-III.
4. Check “COOLAN TEMP/S” value.
   If the “COOLAN TEMP/S” is less than 60°C (140°F), the result will be OK.
   If the “COOLAN TEMP/S” is above 60°C (140°F), go to the following step.
5. Cool engine down until “COOLAN TEMP/S” signal is less than 60°C (140°F).
6. Wait at least 10 seconds.
7. Check 1st trip DTC.
8. If 1st trip DTC is detected, go to EC-1403, "Diagnosis Procedure".

WITH GST

Follow the procedure “WITH CONSULT-III” above.

Wiring Diagram

INFOID:0000000005285942

EC-FTTS-01

: DETECTABLE LINE FOR DTC
: NON-DETECTABLE LINE FOR DTC

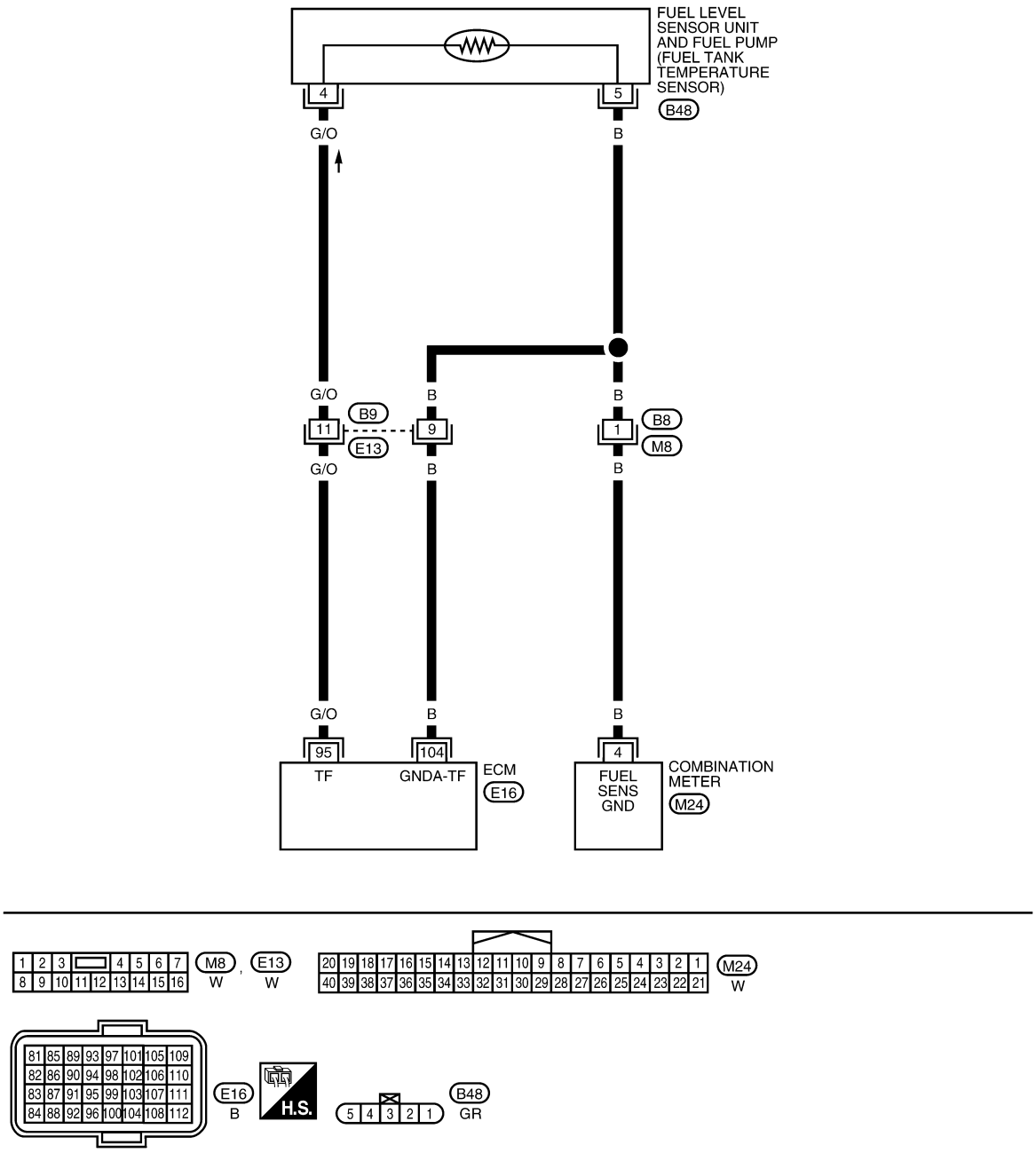

Diagnosis Procedure

INFOID:0000000005285943

1. CHECK GROUND CONNECTIONS

1. Turn ignition switch OFF.

2. Loosen and retighten ground screws on the body.
   Refer to EC-1251, "Ground Inspection".

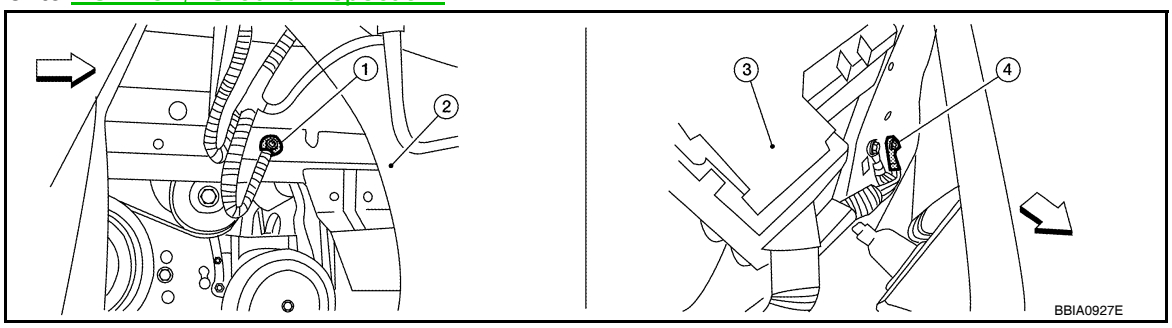

⇦: Vehicle front

1. Body ground E9 (view with front wheel RH and fender protector RH removed.)
2. Washer tank
3. Fuse and fusible link box
4. Body ground E15

OK or NG

OK >> GO TO 2.
NG >> Repair or replace ground connections.

2. CHECK FUEL TANK TEMPERATURE SENSOR POWER SUPPLY CIRCUIT

1. Turn ignition switch OFF.
2. Disconnect “fuel level sensor unit and fuel pump” harness connector (1).
- ⇦: Vehicle front
3. Turn ignition switch ON.

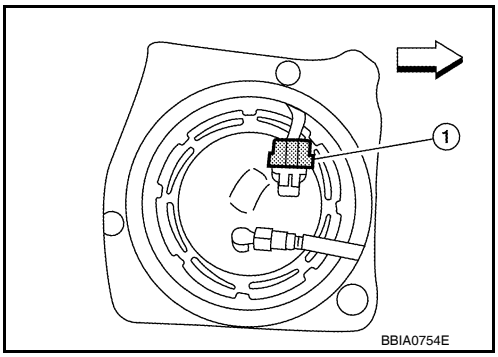

4. Check voltage between “fuel level sensor unit and fuel pump” terminal 4 and ground with CONSULT-III or tester.

Voltage: Approximately 5 V

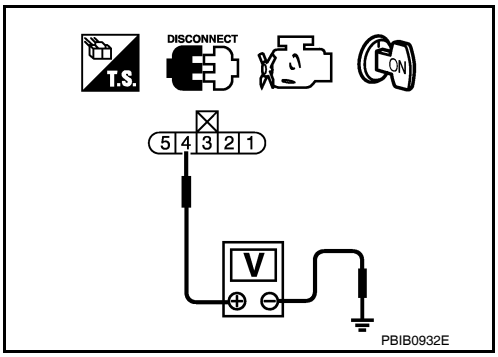

OK or NG

OK >> GO TO 4.
NG >> GO TO 3.

3. DETECT MALFUNCTIONING PART

Check the following.
- Harness connectors B9, E13
- Harness for open or short between ECM and “fuel level sensor unit and fuel pump”

>> Repair open circuit or short to ground or short to power in harness or connector.

4. CHECK FUEL TANK TEMPERATURE SENSOR GROUND CIRCUIT FOR OPEN AND SHORT

1. Turn ignition switch OFF.
2. Disconnect combination meter harness connector.

3. Check harness continuity between “fuel level sensor unit and fuel pump” terminal 5 and combination meter terminal 4, ECM terminal 104. Refer to Wiring Diagram.

Continuity should exist.

4. Also check harness for short to ground and short to power.

OK or NG

OK >> GO TO 6.
NG >> GO TO 5.

5. DETECT MALFUNCTIONING PART

Check the following.
- Harness connectors B8, M8
- Harness connectors B9, E13
- Harness for open or short between “fuel level sensor unit and fuel pump” and combination meter.
- Harness for open or short between “fuel level sensor unit and fuel pump” and ECM.

>> Repair open circuit or short to ground or short to power in harness or connectors.

6. CHECK FUEL TANK TEMPERATURE SENSOR

Refer to, EC-1405, "Component Inspection".

OK or NG

OK >> GO TO 7.
NG >> Replace “fuel level sensor unit and fuel pump”.

7. CHECK INTERMITTENT INCIDENT

Perform EC-1245.

>> **INSPECTION END**

Component Inspection

INFOID:0000000005285944

FUEL TANK TEMPERATURE SENSOR

1. Check resistance between “fuel level sensor unit and fuel pump” terminal 4 and 5 by heating with hot water as shown in the figure.

Temperature [°C (°F)]	Resistance (kΩ)
20 (68)	2.3 - 2.7
50 (122)	0.79 - 0.90

2. If NG, replace “fuel level sensor unit and fuel pump”.

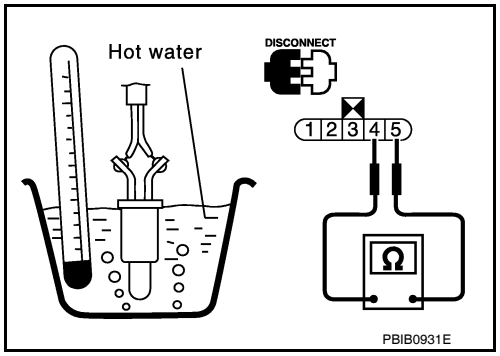

Removal and Installation

INFOID:0000000005285945

FUEL TANK TEMPERATURE SENSOR

Refer to FL-6.

DTC P0182, P0183 FTT SENSOR

Component Description

INFOID:0000000005285946

The fuel tank temperature sensor (4) is used to detect the fuel temperature inside the fuel tank. The sensor modifies a voltage signal from the ECM. The modified signal returns to the ECM as the fuel temperature input. The sensor uses a thermistor which is sensitive to the change in temperature. The electrical resistance of the thermistor decreases as temperature increases.

- Fuel level sensor unit and fuel pump (1)
- Fuel pressure regulator (2)
- Fuel level sensor (3)

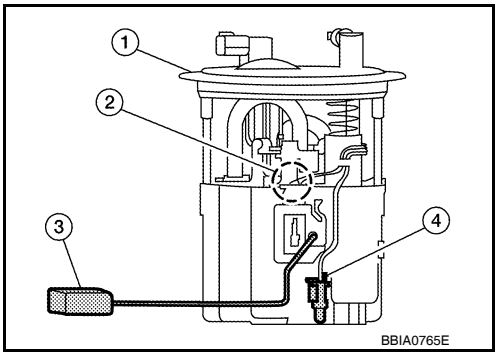

<Reference data>

Fluid temperature [°C (°F)]	Voltage* (V)	Resistance (kΩ)
20 (68)	3.5	2.3 - 2.7
50 (122)	2.2	0.79 - 0.90

*: This data is reference values and is measured between ECM terminal 95 (Fuel tank temperature sensor) and ground.

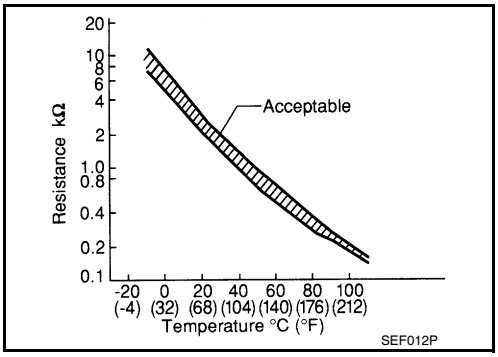

CAUTION:

Never use ECM ground terminals when measuring input/output voltage. Doing so may result damage the ECM's transistor. Use ground other than ECM, such as ground.

On Board Diagnosis Logic

INFOID:0000000005285947

DTC No.	Trouble diagnosis name	DTC detecting condition	Possible cause
P0182 0182	Fuel tank temperature sensor circuit low input	An excessively low voltage from the sensor is sent to ECM.	• Harness or connectors (Fuel tank temperature sensor circuit is open or shorted.) • Fuel tank temperature sensor
P0183 0183	Fuel tank temperature sensor circuit high input	An excessively high voltage from the sensor is sent to ECM.	

DTC Confirmation Procedure

INFOID:0000000005285948

NOTE:

If DTC Confirmation Procedure has been previously conducted, always turn ignition switch OFF and wait at least 10 seconds before conducting the next test.

1. Turn ignition switch ON and wait at least 5 seconds.
2. Check 1st trip DTC.
3. If 1st trip DTC is detected, go to EC-1407, "Diagnosis Procedure".

Wiring Diagram

INFOID:0000000005285949

EC-FTTS-01

: DETECTABLE LINE FOR DTC
: NON-DETECTABLE LINE FOR DTC

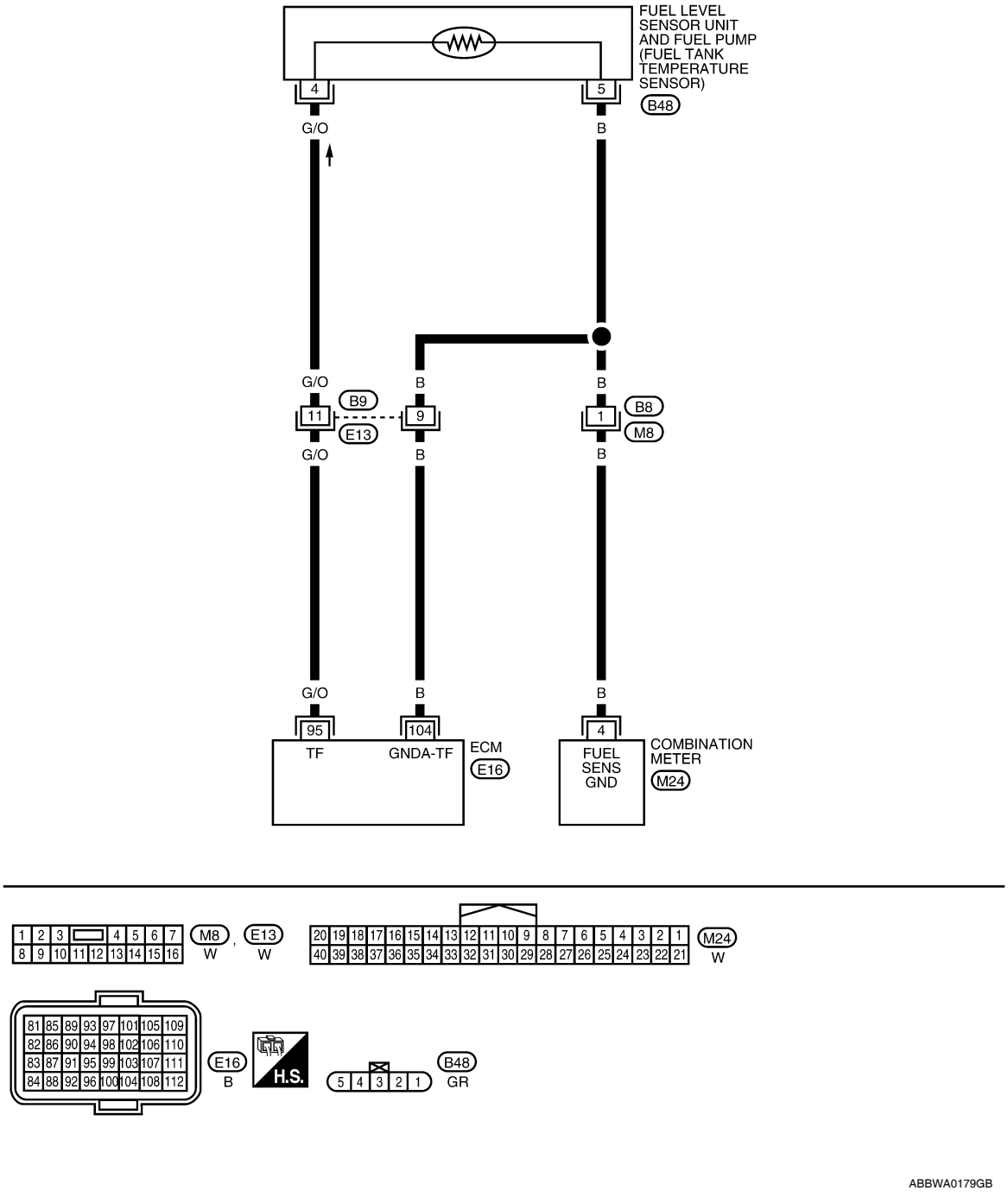

Diagnosis Procedure

INFOID:0000000005285950

1. CHECK GROUND CONNECTIONS

1. Turn ignition switch OFF.
2. Loosen and retighten ground screw on the body.

Refer to EC-1251, "Ground Inspection".

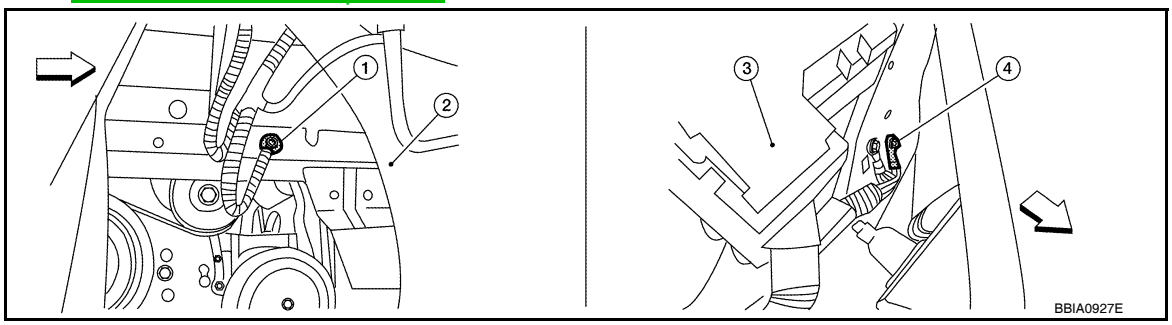

⇦: Vehicle front

1. Body ground E9 (view with front wheel RH and fender protector RH removed.)
2. Washer tank
3. Fuse and fusible link box
4. Body ground E15

OK or NG

OK >> GO TO 2.
NG >> Repair or replace ground connections.

2. CHECK FUEL TANK TEMPERATURE SENSOR POWER SUPPLY CIRCUIT

1. Disconnect “fuel level sensor unit and fuel pump” harness connector (1).
- ⇦: Vehicle front
2. Turn ignition switch ON.

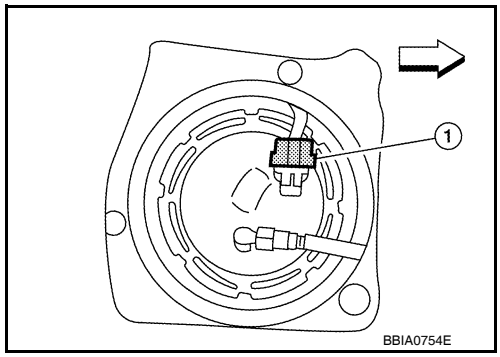

3. Check voltage between “fuel level sensor unit and fuel pump” terminal 4 and ground with CONSULT-III or tester.

Voltage: Approximately 5 V

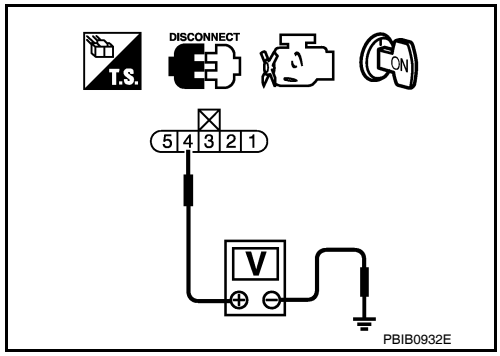

OK or NG

OK >> GO TO 4.
NG >> GO TO 3.

3. DETECT MALFUNCTIONING PART

Check the following.
- Harness connectors B9, E13
- Harness for open or short to ground or short between ECM and “fuel level sensor unit and fuel pump”

>> Repair open circuit or short to ground or short to power in harness or connector.

4. CHECK FUEL TANK TEMPERATURE SENSOR GROUND CIRCUIT FOR OPEN AND SHORT

1. Turn ignition switch OFF.
2. Disconnect combination meter harness connector.
3. Check harness continuity between “fuel level sensor unit and fuel pump” terminal 5 and combination meter terminal 4, ECM terminal 104. Refer to Wiring Diagram.

Continuity should exist.

4. Also check harness for short to ground and short to power.

OK or NG

OK >> GO TO 6.
NG >> GO TO 5.

5. DETECT MALFUNCTIONING PART

Check the following.
- Harness connectors B8, M8
- Harness connectors B9, E13
- Harness for open or short between “fuel level sensor unit and fuel pump” and combination meter
- Harness for open or short between “fuel level sensor unit and fuel pump” and ECM

>> Repair open circuit or short to ground or short to power in harness or connector.

6. CHECK FUEL TANK TEMPERATURE SENSOR

Refer to, EC-1409, "Component Inspection".

OK or NG

OK >> GO TO 7.
NG >> Replace “fuel level sensor unit and fuel pump”.

7. CHECK INTERMITTENT INCIDENT

Perform EC-1245.

>> **INSPECTION END**

Component Inspection

INFOID:0000000005285951

FUEL TANK TEMPERATURE SENSOR

1. Check resistance between “fuel level sensor unit and fuel pump” terminal 4 and 5 by heating with hot water as shown in the figure.

Temperature [°C (°F)]	Resistance (kΩ)
20 (68)	2.3 - 2.7
50 (122)	0.79 - 0.90

2. If NG, replace “fuel level sensor unit and fuel pump”.

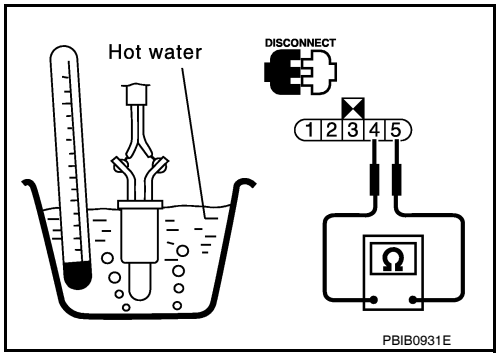

Removal and Installation

INFOID:0000000005285952

FUEL TANK TEMPERATURE SENSOR

Refer to FL-6.

DTC P0222, P0223 TP SENSOR

Component Description

INFOID:0000000005285953

Electric throttle control actuator consists of throttle control motor, throttle position sensor, etc. The throttle position sensor responds to the throttle valve movement.
The throttle position sensor has two sensors. These sensors are a kind of potentiometers which transform the throttle valve position into output voltage, and emit the voltage signal to the ECM. The ECM judges the current opening angle of the throttle valve from these signals and controls the throttle valve opening signal in response to driving conditions via the throttle control motor.

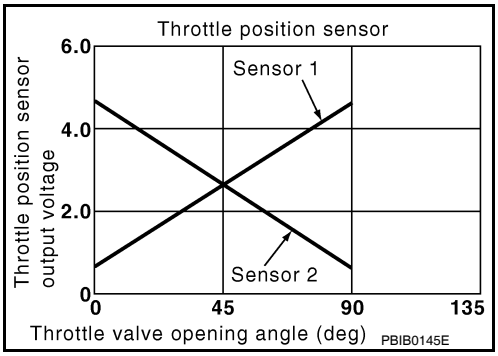

CONSULT-III Reference Value in Data Monitor Mode

INFOID:0000000005285954

Specification data are reference values.

Monitor item	Condition		Specification
TP SEN 1-B1 TP SEN 2-B1*	• Ignition switch: ON (Engine stopped)	Accelerator pedal: Fully released	More than 0.36 V
	• Selector lever: D (CVT), 1st (M/T)	Accelerator pedal: Fully depressed	Less than 4.75 V

*: Throttle position sensor 2 signal is converted by ECM internally. Thus, it differs from ECM terminal voltage signal.

On Board Diagnosis Logic

INFOID:0000000005285955

These self-diagnoses have the one trip detection logic.
NOTE:
If DTC P0222 or P0223 is displayed with DTC P0643, first perform the trouble diagnosis for DTC P0643. Refer to EC-1530.

DTC No.	Trouble diagnosis name	DTC detecting condition	Possible cause
P0222 0222	Throttle position sensor 1 circuit low input	An excessively low voltage from the TP sensor 1 is sent to ECM.	• Harness or connectors (TP sensor 1 circuit is open or shorted.) (APP sensor 2 circuit is shorted.) • Electric throttle control actuator (TP sensor 1) • Accelerator pedal position sensor (APP sensor 2)
P0223 0223	Throttle position sensor 1 circuit high input	An excessively high voltage from the TP sensor 1 is sent to ECM.	

FAIL-SAFE MODE

When the malfunction is detected, the ECM enters fail-safe mode and the MIL illuminates.

Engine operation condition in fail-safe mode
The ECM controls the electric throttle control actuator in regulating the throttle opening in order for the idle position to be within +10 degrees. The ECM regulates the opening speed of the throttle valve to be slower than the normal condition. So, the acceleration will be poor.

DTC Confirmation Procedure

INFOID:0000000005285956

NOTE:
If DTC Confirmation Procedure has been previously conducted, always turn ignition switch OFF and wait at least 10 seconds before conducting the next test.
TESTING CONDITION:
Before performing the following procedure, confirm that battery voltage is more than 8 V at idle.

1. Start engine and let it idle for 1 second.

2. Check DTC.
3. If DTC is detected, go to EC-1412, "Diagnosis Procedure".

Wiring Diagram

INFOID:0000000005285957

EC-TPS1-01

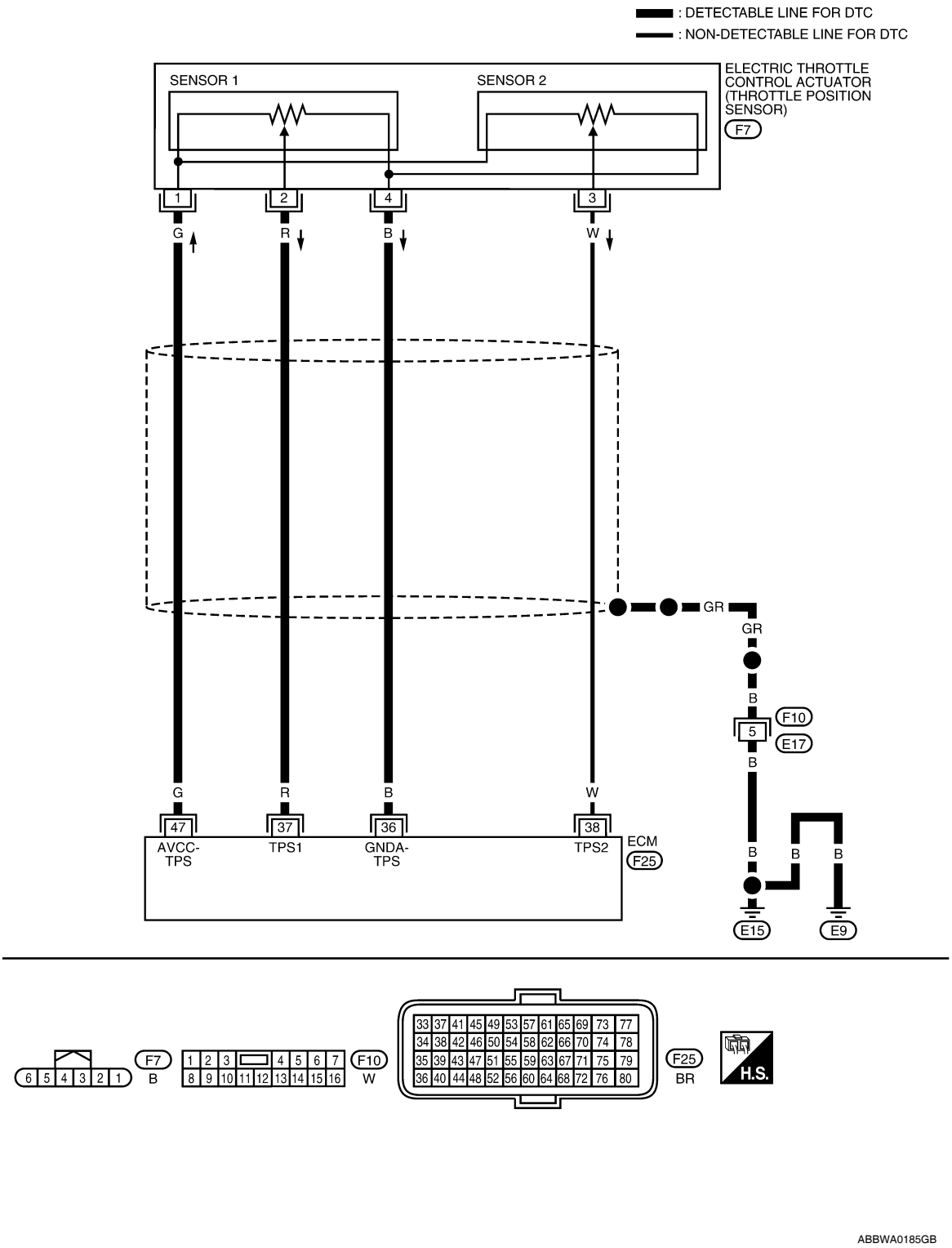

Specification data are reference values and are measured between each terminal and ground.

CAUTION:

Never use ECM ground terminals when measuring input/output voltage. Doing so may result in damage to the ECM's transistor. Use a ground other than ECM terminals, such as the ground.

TERMINAL NO.	WIRE COLOR	ITEM	CONDITION	DATA (DC Voltage)
36	B	Sensor ground (Throttle position sensor)	**[Engine is running]** • **Warm-up condition** • Idle speed	Approximately 0 V
37	R	Throttle position sensor 1	**[Ignition switch: ON]** • Engine stopped • Selector lever: D (CVT), 1st (M/T) • Accelerator pedal: Fully released	More than 0.36 V
			[Ignition switch: ON] • Engine stopped • Selector lever: D (CVT), 1st (M/T) • Accelerator pedal: Fully depressed	Less than 4.75 V
38	W	Throttle position sensor 2	**[Ignition switch: ON]** • Engine stopped • Selector lever: D (CVT), 1st (M/T) • Accelerator pedal: Fully released	Less than 4.75 V
			[Ignition switch: ON] • Engine stopped • Selector lever: D (CVT), 1st (M/T) • Accelerator pedal: Fully depressed	More than 0.36 V
47	G	Sensor power supply (Throttle position sensor)	**[Ignition switch: ON]**	Approximately 5 V

Diagnosis Procedure

INFOID:0000000005285958

1. CHECK GROUND CONNECTIONS

1. Turn ignition switch OFF.
2. Loosen and retighten ground screws on the body.
   Refer to EC-1251, "Ground Inspection".

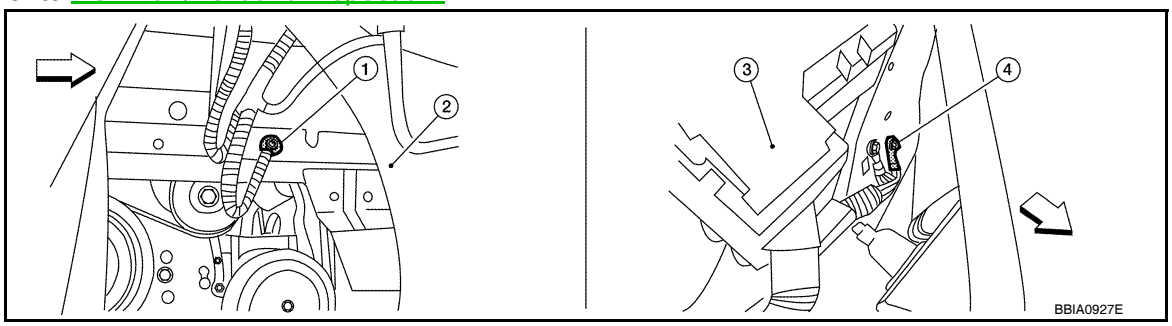

⇦: Vehicle front

1. Body ground E9 (view with front wheel RH and fender protector RH removed.)
2. Washer tank
3. Fuse and fusible link box
4. Body ground E15

OK or NG

OK >> GO TO 2.
NG >> Repair or replace ground connections.

2. CHECK THROTTLE POSITION SENSOR 1 POWER SUPPLY CIRCUIT

1. Disconnect electric throttle control actuator harness connector (1).
- ⇦: Vehicle front
2. Turn ignition switch ON.

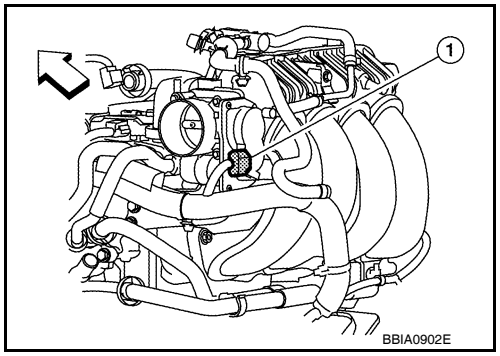

3. Check voltage between electric throttle control actuator terminal 1 and ground with CONSULT-III or tester.

Voltage: Approximately 5 V

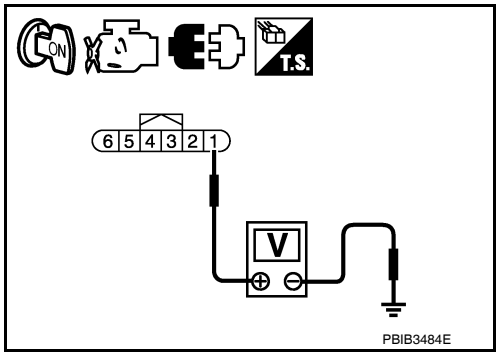

OK or NG

OK >> GO TO 3.
NG >> Repair open circuit or short to ground or short to power in harness connectors.

3. CHECK THROTTLE POSITION SENSOR 1 GROUND CIRCUIT FOR OPEN AND SHORT

1. Turn ignition switch OFF.
2. Disconnect ECM harness connector.
3. Check harness continuity between ECM terminal 36 and electric throttle control actuator terminal 4. Refer to Wiring Diagram.

Continuity should exist.

4. Also check harness for short to ground or short to power.

OK or NG

OK >> GO TO 4.
NG >> Repair open circuit or short to ground or short to power in harness or connectors.

4. CHECK THROTTLE POSITION SENSOR 1 INPUT SIGNAL CIRCUIT FOR OPEN AND SHORT

1. Check harness continuity between ECM terminal 37 and electric throttle control actuator terminal 2. Refer to Wiring Diagram.

Continuity should exist.

2. Also check harness for short to ground and short to power.

OK or NG

OK >> GO TO 5.
NG >> Repair open circuit or short to ground or short to power in harness or connectors.

5. CHECK THROTTLE POSITION SENSOR

Refer to EC-1414, "Component Inspection".

OK or NG

OK >> GO TO 7.
NG >> GO TO 6.

6. REPLACE ELECTRIC THROTTLE CONTROL ACTUATOR

1. Replace the electric throttle control actuator.
2. Perform EC-1193, "Throttle Valve Closed Position Learning".
3. Perform EC-1193, "Idle Air Volume Learning".

>> **INSPECTION END**

7. CHECK INTERMITTENT INCIDENT

Refer to EC-1245.

>> **INSPECTION END**

Component Inspection

INFOID:0000000005285959

THROTTLE POSITION SENSOR

1. Reconnect all harness connectors disconnected.
2. Perform EC-1193, "Throttle Valve Closed Position Learning".
3. Turn ignition switch ON.
4. Set selector lever to D position (CVT) or 1st position (M/T).
5. Check voltage between ECM terminals 37 (TP sensor 1 signal), 38 (TP sensor 2 signal) and ground under the following conditions.

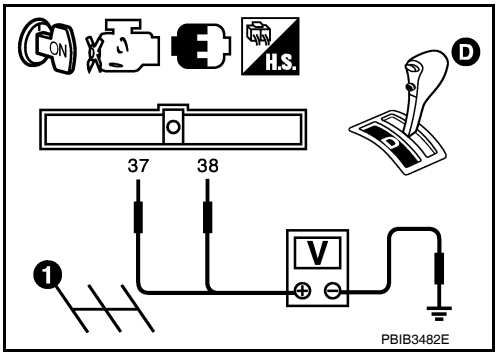

Terminal	Accelerator pedal	Voltage
37 (Throttle position sensor 1)	Fully released	More than 0.36 V
	Fully depressed	Less than 4.75 V
38 (Throttle position sensor 2)	Fully released	Less than 4.75 V
	Fully depressed	More than 0.36 V

6. If NG, replace electric throttle control actuator and go to the next step.
7. Perform EC-1193, "Throttle Valve Closed Position Learning".
8. Perform EC-1193, "Idle Air Volume Learning".

Removal and Installation

INFOID:0000000005285960

ELECTRIC THROTTLE CONTROL ACTUATOR

Refer to EM-135.

DTC P0300 - P0304 MULTIPLE CYLINDER MISFIRE, NO. 1 - 4 CYLINDER MISFIRE

On Board Diagnosis Logic

INFOID:0000000005285961

When a misfire occurs, engine speed will fluctuate. If the engine speed fluctuates enough to cause the crankshaft position (CKP) sensor (POS) signal to vary, ECM can determine that a misfire is occurring.

Sensor	Input Signal to ECM	ECM function
Crankshaft position sensor (POS)	Engine speed	On board diagnosis of misfire

The misfire detection logic consists of the following two conditions.

1. One Trip Detection Logic (Three Way Catalyst Damage)
   On the 1st trip when a misfire condition occurs that can damage the three way catalyst (TWC) due to overheating, the MIL will blink.
   When a misfire condition occurs, the ECM monitors the CKP sensor (POS) signal every 200 engine revolutions for a change.
   When the misfire condition decreases to a level that will not damage the TWC, the MIL will turn off.
   If another misfire condition occurs that can damage the TWC on a second trip, the MIL will blink.
   When the misfire condition decreases to a level that will not damage the TWC, the MIL will remain on.
   If another misfire condition occurs that can damage the TWC, the MIL will begin to blink again.
2. Two Trip Detection Logic (Exhaust quality deterioration)
   For misfire conditions that will not damage the TWC (but will affect vehicle emissions), the MIL will only light when the misfire is detected on a second trip. During this condition, the ECM monitors the CKP sensor signal every 1,000 engine revolutions.
   A misfire malfunction can be detected in any one cylinder or in multiple cylinders.

DTC No.	Trouble diagnosis name	DTC detecting condition	Possible cause
P0300 0300	Multiple cylinder misfires detected	Multiple cylinder misfire.	• Improper spark plug • Insufficient compression • Incorrect fuel pressure • Fuel injector circuit is open or shorted • Fuel injector • Intake air leak • The ignition signal circuit is open or shorted • Lack of fuel • Drive plate or flywheel • Air fuel ratio (A/F) sensor 1 • Incorrect PCV hose connection
P0301 0301	No.1 cylinder misfire detected	No. 1 cylinder misfires.	
P0302 0302	No. 2 cylinder misfire detected	No. 2 cylinder misfires.	
P0303 0303	No. 3 cylinder misfire detected	No. 3 cylinder misfires.	
P0304 0304	No. 4 cylinder misfire detected	No. 4 cylinder misfires.	

DTC Confirmation Procedure

INFOID:0000000005285962

CAUTION:
Always drive vehicle in safe manner according to traffic conditions and obey all traffic laws when driving.
NOTE:
If DTC Confirmation Procedure has been previously conducted, always turn ignition switch OFF and wait at least 10 seconds before conducting the next test.

1. Start engine and warm it up to normal operating temperature.
2. Turn ignition switch OFF and wait at least 10 seconds.
3. Restart engine and let it idle for approximately 15 minutes.
4. Check 1st trip DTC.
5. If 1st trip DTC is detected, go to EC-1416, "Diagnosis Procedure".
   NOTE:
   If 1st trip DTC is not detected during above procedure, performing the following procedure is advised.

a. Turn ignition switch OFF and wait at least 10 seconds.

b. Start engine and drive the vehicle under the similar conditions to (1st trip) Freeze Frame Data for a certain time. Refer to table below.
Hold the accelerator pedal as steady as possible.
The similar conditions to (1st trip) Freeze Frame Data means the vehicle operation that the following condition should be satisfied at the same time:

Engine speed	Engine speed in the freeze frame data ± 400 rpm
Vehicle speed	Vehicle speed in the freeze frame data ± 10 km/h (6 MPH)
Basic fuel schedule	Basic fuel schedule in freeze frame data × (1 ± 0.1)
Engine coolant temperature (T) condition	When the freeze frame data shows lower than 70°C (158°F), T should be lower than 70°C (158°F)
	When the freeze frame data shows higher than or equal to 70°C (158°F), T should be higher than or equal to 70°C (158°F)

Driving time varies according to the engine speed in the freeze frame data.
Refer to the following table.

Engine speed	Time
Around 1,000 rpm	Approximately 10 minutes
Around 2,000 rpm	Approximately 5 minutes
More than 3,000 rpm	Approximately 3.5 minutes

Diagnosis Procedure

INFOID:0000000005285963

1. CHECK FOR INTAKE AIR LEAK AND PCV HOSE

1. Start engine and run it at idle speed.
2. Listen for the sound of the intake air leak.
3. Check PCV hose connection.

OK or NG

OK >> GO TO 2.
NG >> Repair or replace.

2. CHECK FOR EXHAUST SYSTEM CLOGGING

Stop engine and visually check exhaust tube, three way catalyst and muffler for dents.

OK or NG

OK >> GO TO 3.
NG >> Repair or replace.

3. PERFORM POWER BALANCE TEST

With CONSULT-III
1. Perform “POWER BALANCE” in “ACTIVE TEST” mode.
2. Is there any cylinder which does not produce a momentary engine speed drop?

Without CONSULT-III
When disconnecting each fuel injector harness connector (1) one at a time, is there any cylinder which does not produce a momentary engine speed drop?
• ⇦: Vehicle front

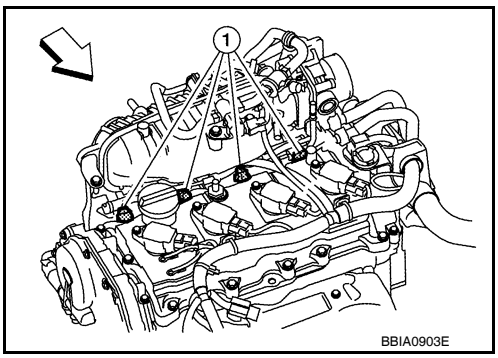

Yes or No

Yes >> GO TO 4.
No >> GO TO 9.

4. CHECK FUEL INJECTOR

Does each fuel injector make an operating sound at idle?

Yes or No

Yes >> GO TO 5.
No >> Check fuel injector(s) and circuit(s). Refer to EC-1647.

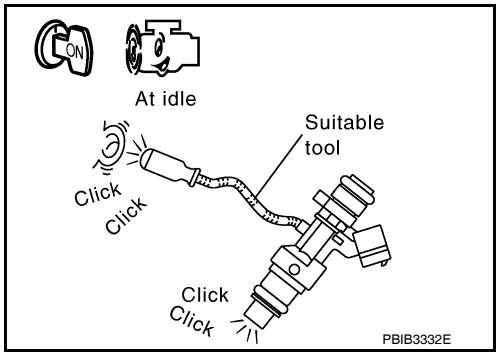

5. CHECK FUNCTION OF IGNITION COIL-I

CAUTION:
Perform the following procedure in a place with no combustible objects and good ventilation.

1. Turn ignition switch OFF.
2. Remove fuel pump fuse (1) in IPDM E/R (2) to release fuel pressure.
   NOTE:
   Do not use CONSULT-III to release fuel pressure, or fuel pressure applies again during the following procedure.
- ⇦: Vehicle front
3. Start engine.
4. After engine stalls, crank it two or three times to release all fuel pressure.
5. Turn ignition switch OFF.
6. Remove all ignition coil harness connectors to avoid the electrical discharge from the ignition coils.
7. Remove ignition coil and spark plug of the cylinder to be checked.
8. Crank engine for 5 seconds or more to remove combustion gas in the cylinder.
9. Connect spark plug and harness connector to ignition coil.
10. Fix ignition coil using a rope etc. with gap of 13 - 17 mm (0.52 - 0.66 in) between the edge of the spark plug and grounded metal portion as shown in the figure.
11. Crank engine for approximately 3 seconds, and check whether spark is generated between the spark plug and the grounded metal portion.

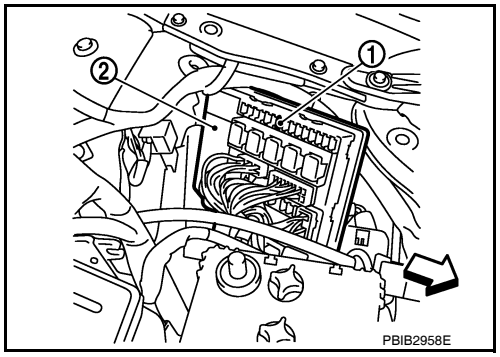

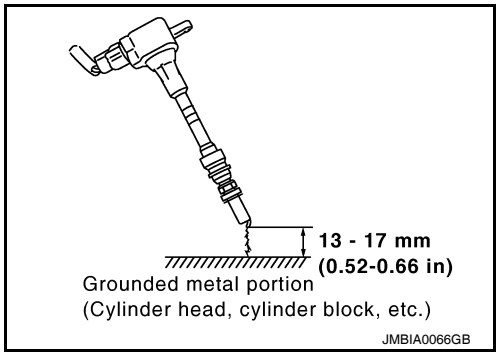

Spark should be generated.

CAUTION:
- **During the operation, always stay 0.5 m (19.7 in) or more away from the spark plag and the ignition coil. Be careful not to get an electrical shock while checking, because the electrical discharge voltage becomes 20 kV or more.**
- **It might cause to damage the ignition coil if the gap of more than 17 mm (0.66 in) is made.**

NOTE:
When the gap is less than 13 mm (0.52 in), a the spark might be generated even if the coil is malfunctioning.

OK or NG

OK >> GO TO 9.
NG >> GO TO 6.

6. CHECK FUNCTION OF IGNITION COIL-II

1. Turn ignition switch OFF.
2. Disconnect spark plug and connect a non-malfunctioning spark plug.
3. Crank engine for approximately 3 seconds, and recheck whether spark is generated between the spark plug and the grounded metal portion.

Spark should be generated.

OK or NG

OK >> GO TO 7.
NG >> Check ignition coil, power transistor and their circuits. Refer to EC-1657.

7. CHECK SPARK PLUG

Check the initial spark plug for fouling, etc.

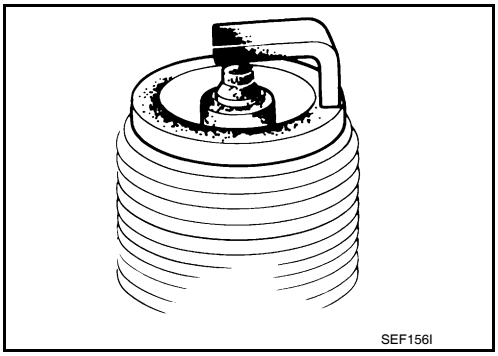

OK or NG

OK >> Replace spark plug(s) with standard type one(s). For spark plug type, refer to MA-39, "SPARK PLUG : Removal and Installation".
NG >> 1. Repair or clean spark plug.
2. GO TO 8.

8. CHECK FUNCTION OF IGNITION COIL-III

1. Reconnect the initial spark plugs.
2. Crank engine for approximately 3 seconds, and recheck whether spark is generated between the spark plug and the grounded portion.

Spark should be generated.

OK or NG

OK >> **INSPECTION END**
NG >> Replace spark plug(s) with standard type one(s). For spark plug type, refer to MA-39, "SPARK PLUG : Removal and Installation".

9. CHECK COMPRESSION PRESSURE

Check compression pressure. Refer to EM-175, "On-Vehicle Service".

OK or NG

OK >> GO TO 10.
NG >> Check pistons, piston rings, valves, valve seats and cylinder head gaskets.

10. CHECK FUEL PRESSURE

1. Install all removed parts.
2. Release fuel pressure to zero. Refer to EC-1195, "Fuel Pressure Check".
3. Install fuel pressure gauge and check fuel pressure. Refer to EC-1195, "Fuel Pressure Check".

At idling: Approximately 350 kPa (3.57 kg/cm^2, 51 psi)

OK or NG

OK >> GO TO 12.
NG >> GO TO 11.

11. DETECT MALFUNCTIONING PART

Check the following.
- Fuel pump and circuit (Refer to EC-1652.)
- Fuel pressure regulator (Refer to EC-1195, "Fuel Pressure Check".)
- Fuel lines (Refer to EM-148.)
- Fuel filter for clogging

>> Repair or replace.

12. CHECK IGNITION TIMING

Check the following items. Refer to EC-1187, "Basic Inspection".

Items	Specifications
Idle speed	CVT: 800 ± 50 rpm (in P or N position)
	M/T: 650 ± 50 rpm (in Neutral position)
Ignition timing	CVT:10 ± 5° BTDC (in Neutral position)
	M/T: 10 ± 5° BTDC (in Neutral position)

OK or NG

OK >> GO TO 13.
NG >> Follow the EC-1187, "Basic Inspection".

13. CHECK AIR FUEL RATIO (A/F) SENSOR 1 CIRCUIT FOR OPEN AND SHORT

1. Turn ignition switch OFF.
2. Disconnect air fuel ratio (A/F) sensor 1 harness connector.
- Air fuel ratio (A/F) sensor 1 (Bank 1) harness connector (1)
- Air fuel ratio (A/F) sensor 1 (Bank 1) (2)
- Air fuel ratio (A/F) sensor 1 (Bank 2) (3)
- Air fuel ratio (A/F) sensor 1 (Bank 2) harness connector (4)
3. Disconnect ECM harness connector.
4. Check harness continuity between the following terminals. Refer to Wiring Diagram.

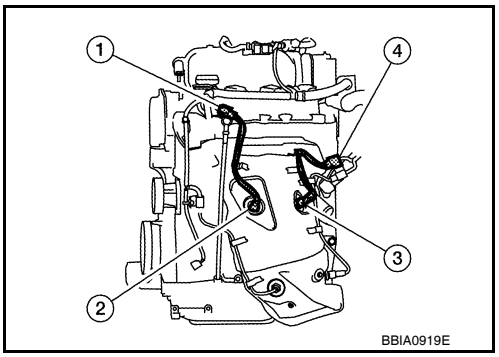

Bank	A/F sensor 1 terminal	ECM terminal
1	1	45
	2	49
2	1	53
	2	57

Continuity should exist.

5. Check harness continuity between the following terminals and ground. Refer to Wiring Diagram.

Bank 1		Bank 2	
A/F sensor terminal	ECM terminal	A/F sensor terminal	ECM terminal
1	45	1	53
2	49	2	57

Continuity should not exist.

6. Also check harness for short to power.

OK or NG

OK >> GO TO 14.
NG >> Repair open circuit or short to ground or short to power in harness or connectors.

14. CHECK AIR FUEL RATIO (A/F) SENSOR 1 HEATER

Refer to EC-1267, "Component Inspection".

OK or NG

OK >> GO TO 16.
NG >> GO TO 15.

15. REPLACE AIR FUEL RATIO (A/F) SENSOR 1

Replace malfunctioning air fuel ratio (A/F) sensor 1.

CAUTION:

- **Discard any A/F sensor which has been dropped from a height of more than 0.5 m (19.7 in) onto a hard surface such as a concrete floor; use a new one.**

- **Before installing new A/F sensor, clean exhaust system threads using oxygen sensor thread cleaner [commercial service tool (J-43897-18 or J-43897-12)] and approved anti-seize lubricant (commercial service tool).**

>> **INSPECTION END**

16. CHECK MASS AIR FLOW SENSOR

With CONSULT-III

1. Start engine and warm it up to normal operating temperature.
2. Check mass air flow sensor signal in “DATA MONITOR” mode with CONSULT-III.

At idling	**: 1.0 - 4.0 g·m/sec**
At 2,500 rpm	**: 4.0 - 10.0 g·m/sec**

With GST

1. Start engine and warm it up to normal operating temperature.
2. Check mass air flow sensor signal in Service $01 with GST.

At idling	**: 1.0 - 4.0 g·m/sec**
At 2,500 rpm	**: 4.0 - 10.0 g·m/sec**

OK or NG

OK >> GO TO 17.
NG >> Check connectors for rusted terminals or loose connections in the mass air flow sensor circuit or ground. Refer to EC-1282.

17. CHECK SYMPTOM MATRIX CHART

Check items on the rough idle symptom in EC-1204, "Symptom Matrix Chart".

OK or NG

OK >> GO TO 18.
NG >> Repair or replace.

18. ERASE THE 1ST TRIP DTC

Some tests may cause a 1st trip DTC to be set.
Erase the 1st trip DTC from the ECM memory after performing the tests. Refer to EC-1155, "Emission-related Diagnostic Information".

>> GO TO 19.

19. CHECK INTERMITTENT INCIDENT

Refer to EC-1245.

>> **INSPECTION END**

DTC P0327, P0328 KS

Component Description

INFOID:0000000005285964

The knock sensor (1) is attached to the cylinder block. It senses engine knocking using a piezoelectric element. A knocking vibration from the cylinder block is sensed as vibrational pressure. This pressure is converted into a voltage signal and sent to the ECM.
- Engine oil cooler (2)

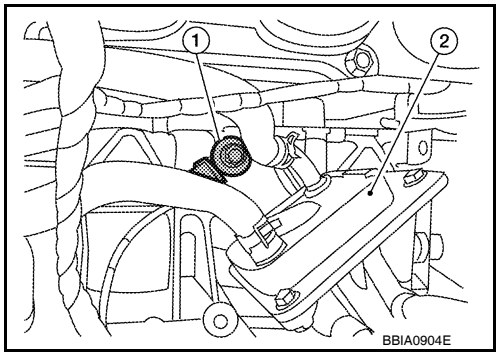

On Board Diagnosis Logic

INFOID:0000000005285965

The MIL will not illuminate for these self-diagnoses.

DTC No.	Trouble Diagnosis Name	DTC Detected Condition	Possible Cause
P0327 0327	Knock sensor circuit low input	An excessively low voltage from the sensor is sent to ECM.	• Harness or connectors (Knock sensor circuit is open or shorted.) • Knock sensor
P0328 0328	Knock sensor circuit high input	An excessively high voltage from the sensor is sent to ECM.	

DTC Confirmation Procedure

INFOID:0000000005285966

NOTE:
If DTC Confirmation Procedure has been previously conducted, always turn ignition switch OFF and wait at least 10 seconds before conducting the next test.
TESTING CONDITION:
Before performing the following procedure, confirm that battery voltage is more than 10 V at idle.

1. Start engine and run it for at least 5 seconds at idle speed.
2. Check 1st trip DTC.
3. If 1st trip DTC is detected, go to EC-1423, "Diagnosis Procedure".

Wiring Diagram

INFOID:0000000005285967

EC-KS-01

: DETECTABLE LINE FOR DTC
: NON-DETECTABLE LINE FOR DTC

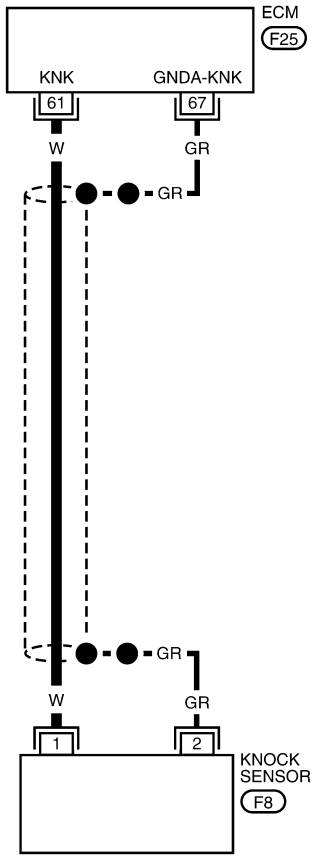

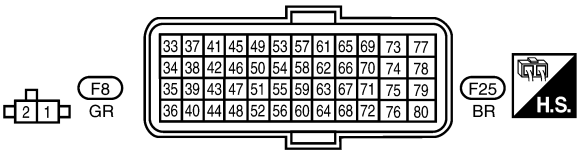

ABBWA0180GB

Specification data are reference values and are measured between each terminal and ground.

CAUTION:

Never use ECM ground terminals when measuring input/output voltage. Doing so may result in damage to the ECM's transistor. Use a ground other than ECM terminals, such as the ground.

TERMINAL NO.	WIRE COLOR	ITEM	CONDITION	DATA (DC Voltage)
61	W	Knock sensor	**[Engine is running]** • Idle speed	Approximately 2.5 V
67	GR	Sensor ground (Knock sensor)	**[Engine is running]** • **Warm-up condition** • Idle speed	Approximately 0 V

Diagnosis Procedure

INFOID:0000000005285968

1. CHECK KNOCK SENSOR INPUT SIGNAL CIRCUIT-I

1. Turn ignition switch OFF.
2. Disconnect ECM harness connector.
3. Check resistance between ECM terminal 61 and ground. Refer to Wiring Diagram.
   NOTE:
   It is necessary to use an ohmmeter which can measure more than 10 MΩ.

   Resistance: Approximately 532 - 588 kΩ [at 20°C (68°F)]

4. Also check harness for short to ground and short to power.

OK or NG

OK >> GO TO 4.
NG >> GO TO 2.

2. CHECK KNOCK SENSOR INPUT SIGNAL CIRCUIT-II

1. Disconnect knock sensor (1) harness connector.
- Engine oil cooler (2)
2. Check harness continuity between ECM terminal 61 and knock sensor terminal 1. Refer to Wiring Diagram.

   Continuity should exist.

3. Also check harness for short to ground and short to power.

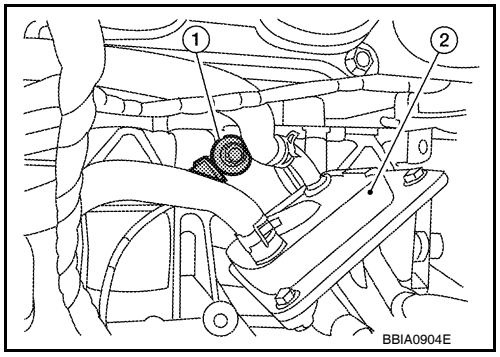

OK or NG

OK >> GO TO 3.
NG >> Repair open circuit or short to ground or short to power in harness or connectors.

3. CHECK KNOCK SENSOR

Refer to EC-1424, "Component Inspection".

OK or NG

OK >> GO TO 6.
NG >> Replace knock sensor.

4. CHECK GROUND CONNECTIONS

Loosen and retighten ground screws on the body.
Refer to EC-1251, "Ground Inspection".

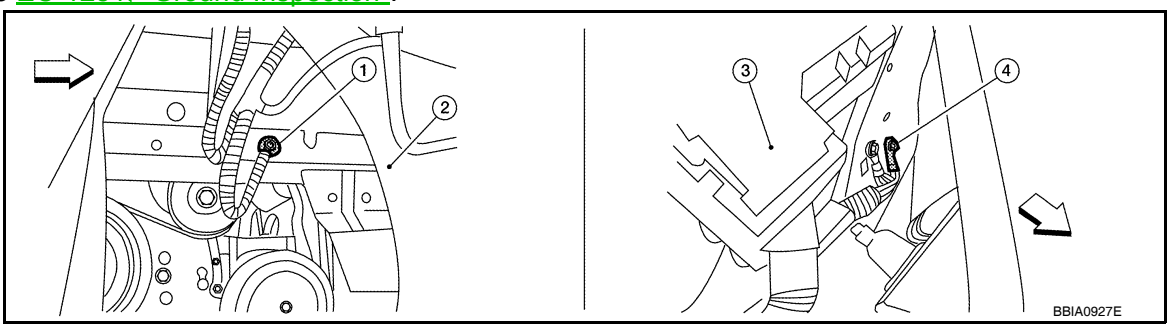

⇦: Vehicle front

1. Body ground E9 (view with front wheel RH and fender protector RH removed.)
2. Washer tank
3. Fuse and fusible link box
4. Body ground E15

OK or NG

OK >> GO TO 5.
NG >> Repair or replace ground connections.

5. CHECK KNOCK SENSOR SHIELD CIRCUIT FOR OPEN AND SHORT

1. Reconnect knock sensor harness connector.
2. Check harness continuity between ECM terminal 67 and knock sensor terminal 2.
   Refer to Wiring Diagram.

   Continuity should exist

3. Also check harness for short to ground and short to power.

OK or NG

OK >> GO TO 6.
NG >> Repair open circuit or short to ground or short to power in harness or connectors.

6. CHECK INTERMITTENT INCIDENT

Refer to EC-1245.

>> **INSPECTION END**

Component Inspection

INFOID:0000000005285969

KNOCK SENSOR

1. Check resistance between knock sensor terminal 1 and ground.
   NOTE:
   It is necessary to use an ohmmeter which can measure more than 10 MΩ.

   Resistance: Approximately 532 - 588 kΩ [at 20°C (68°F)]

   CAUTION:
   Never use any knock sensors that have been dropped or physically damaged. Use only new ones.

2. If NG, replace knock sensor.

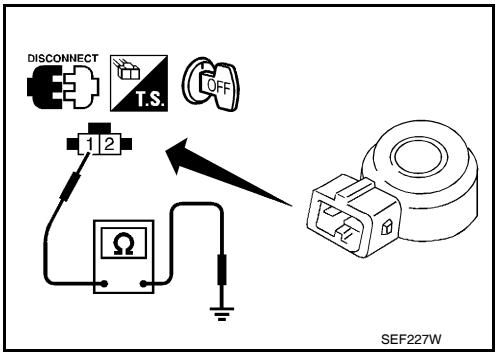

Removal and Installation

INFOID:0000000005285970

KNOCK SENSOR

Refer to EM-188.

DTC P0335 CKP SENSOR (POS)

Component Description

INFOID:0000000005285971

The crankshaft position sensor (POS) is located on the cylinder block rear housing facing the gear teeth (cogs) of the signal plate at the end of the crankshaft. It detects the fluctuation of the engine revolution. The sensor consists of a permanent magnet and Hall IC.
When the engine is running, the high and low parts of the teeth cause the gap with the sensor to change. The changing gap causes the magnetic field near the sensor to change. Due to the changing magnetic field, the voltage from the sensor changes. The ECM receives the voltage signal and detects the fluctuation of the engine revolution.
ECM receives the signals as shown in the figure.

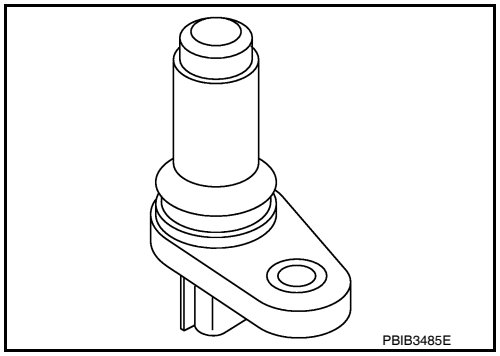

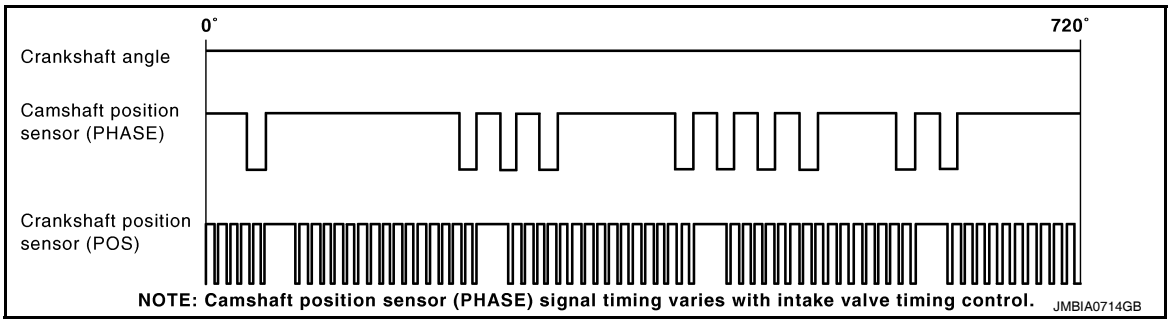

CONSULT-III Reference Value in Data Monitor Mode

INFOID:0000000005285972

Specification data are reference values.

Monitor item	Condition	Specification
ENG SPEED	• Run engine and compare CONSULT-III value with the tachometer indication.	Almost the same speed as the tachometer indication.

On Board Diagnosis Logic

INFOID:0000000005285973

DTC No.	Trouble diagnosis name	DTC detecting condition	Possible cause
P0335 0335	Crankshaft position sensor (POS) circuit	• The crankshaft position sensor (POS) signal is not detected by the ECM during the first few seconds of engine cranking. • The proper pulse signal from the crankshaft position sensor (POS) is not sent to ECM while the engine is running. • The crankshaft position sensor (POS) signal is not in the normal pattern during engine running.	• Harness or connectors [Crankshaft position sensor (POS) circuit is open or shorted.] (Accelerator pedal position sensor circuit is shorted.) (Refrigerant pressure sensor circuit is shorted.) (EVAP control system pressure sensor circuit is sorted.) • Crankshaft position sensor (POS) • Accelerator pedal position sensor (APP sensor 2) • Refrigerant pressure sensor • EVAP control system pressure sensor • Signal plate

DTC Confirmation Procedure

INFOID:0000000005285974

NOTE:
If DTC Confirmation Procedure has been previously conducted, always turn ignition switch OFF and wait at least 10 seconds before conducting the next test.

TESTING CONDITION:
Before performing the following procedure, confirm that battery voltage is more than 10.5 V with ignition switch ON.

1. Crank engine for at least 2 seconds and run it for at least 5 seconds at idle speed.
2. Check 1st trip DTC.
3. If 1st trip DTC is detected, go to EC-1427, "Diagnosis Procedure".

Wiring Diagram

INFOID:0000000005285975

EC-POS-01

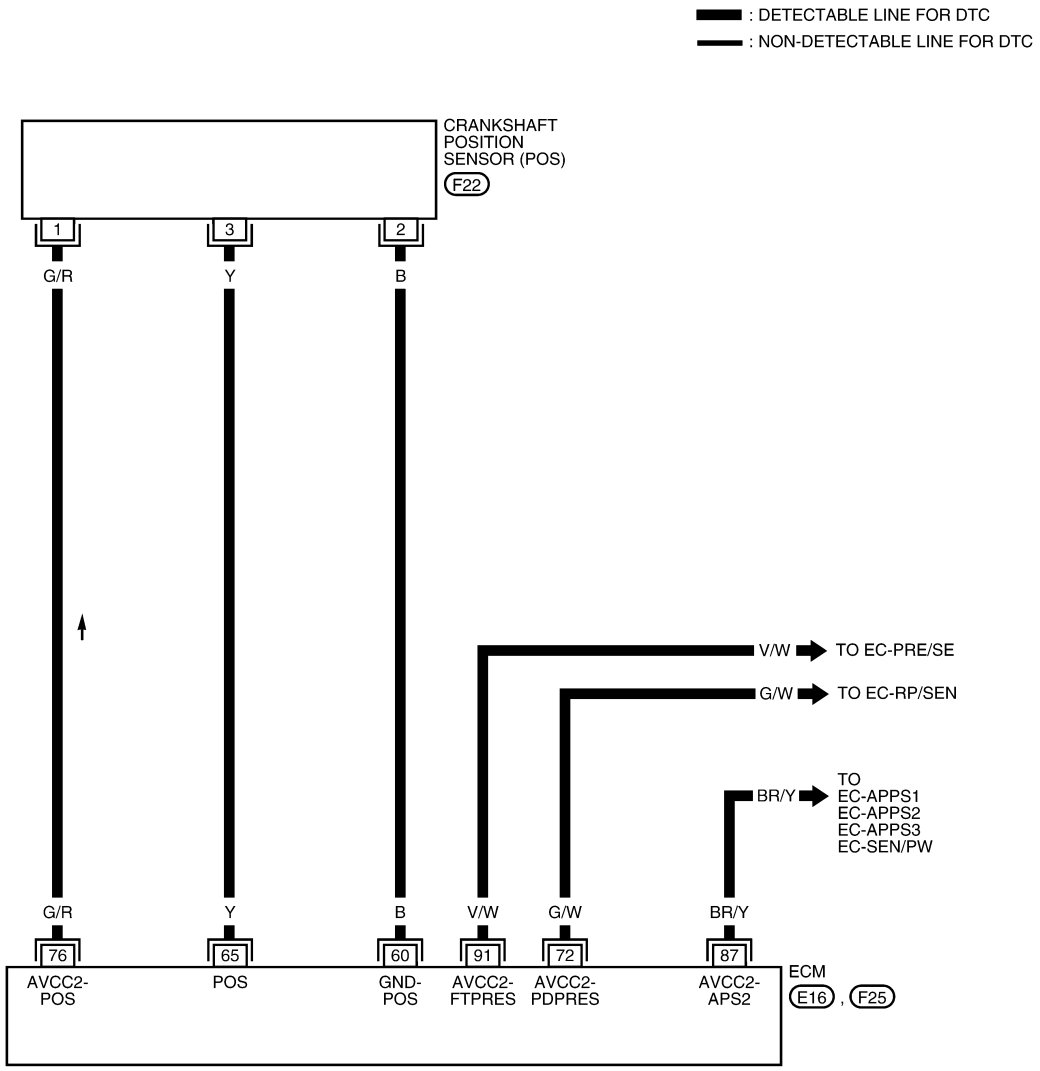

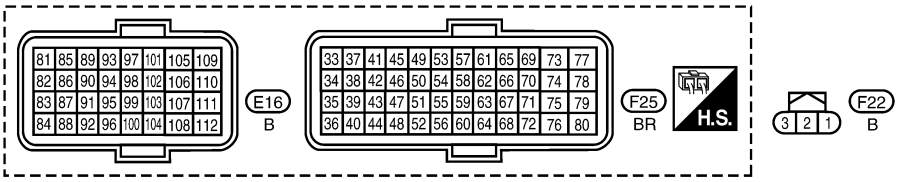

ABBWA0210GB

Specification data are reference values and are measured between each terminal and ground.
Pulse signal is measured by CONSULT-III.

CAUTION:

Never use ECM ground terminals when measuring input/output voltage. Doing so may result in damage to the ECM's transistor. Use a ground other than ECM terminals, such as the ground.

TERMINAL NO.	WIRE COLOR	ITEM	CONDITION	DATA (DC Voltage)
60	B	Sensor ground [Crankshaft position sensor (POS)]	**[Engine is running]** • **Warm-up condition** • Idle speed	Approximately 0 V
65	Y	Crankshaft position sensor (POS)	**[Engine is running]** • **Warm-up condition** • Idle speed **NOTE:** The pulse cycle changes depending on rpm at idle	Approximately 4.0 V★ 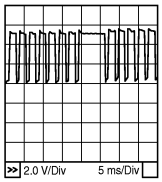 PBIB2998E
			[Engine is running] • Engine speed: 2,000 rpm	Approximately 4.0 V★ 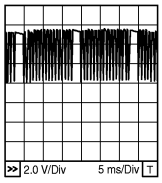 PBIB2999E
72	G/W	Sensor power supply (Refrigerant pressure sensor)	**[Ignition switch: ON]**	Approximately 5 V
76	G/R	Sensor power supply [Crankshaft position sensor (POS)]	**[Ignition switch: ON]**	Approximately 5 V
87	BR/Y	Sensor power supply (APP sensor 2)	**[Ignition switch: ON]**	Approximately 5 V
91	V/W	EVAP control system pressure sensor power supply	**[Ignition switch: ON]**	Approximately 5 V

★: Average voltage for pulse signal (Actual pulse signal can be confirmed by oscilloscope.)

Diagnosis Procedure

INFOID:0000000005285976

1. CHECK GROUND CONNECTIONS

1. Turn ignition switch OFF.
2. Loosen and retighten ground screws on the body.
   Refer to EC-1251, "Ground Inspection".

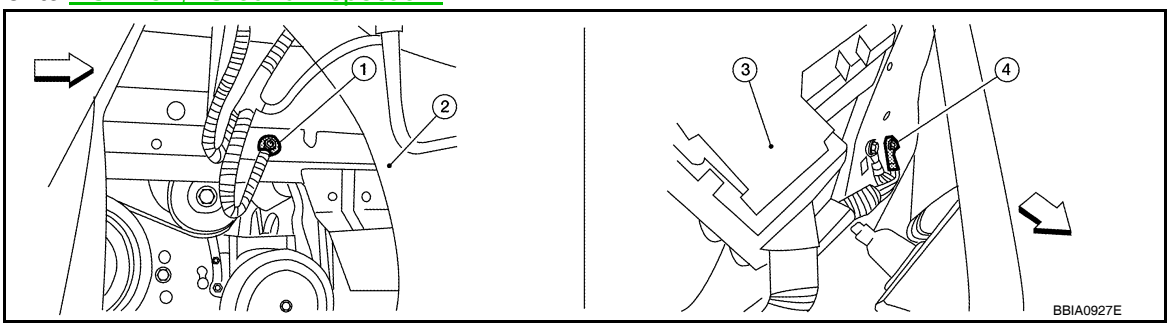

⇦: Vehicle front

1. Body ground E9 (view with front wheel RH and fender protector RH removed.)
2. Washer tank
3. Fuse and fusible link box
4. Body ground E15

OK or NG

OK >> GO TO 2.
NG >> Repair or replace ground connections.

2. CHECK CRANKSHAFT POSITION (CKP) SENSOR (POS) POWER SUPPLY CIRCUIT-I

1. Disconnect crankshaft position (CKP) sensor (POS) (1) harness connector.
- Drive shaft (RH) (2)
2. Turn ignition switch ON.

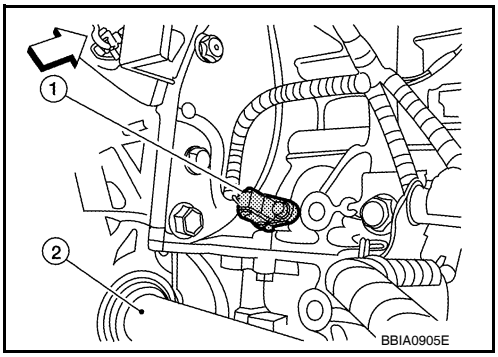

3. Check voltage between CKP sensor (POS) terminal 1 and ground with CONSULT-III or tester.

Voltage: Approximately 5V

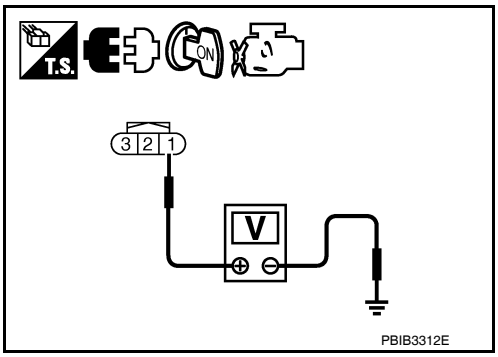

OK or NG

OK >> GO TO 9.
NG >> GO TO 3.

3. CHECK CKP SENSOR (POS) POWER SUPPLY CIRCUIT-II

1. Turn ignition switch OFF.
2. Disconnect ECM harness connector.
3. Check harness continuity between CKP sensor (POS) terminal 1 and ECM terminal 76. Refer to Wiring Diagram.

Continuity should exist.

OK or NG

OK >> GO TO 4.
NG >> Repair open circuit.

4. CHECK POWER SUPPLY CIRCUITS

Check harness for short to power and short to ground, between the following terminals.

ECM terminal	Sensor terminal	Reference Wiring Diagram
72	Refrigerant pressure sensor terminal 3	EC-1667, "Wiring Diagram"
76	Crankshaft position sensor (POS) terminal 1	EC-1426, "Wiring Diagram"
87	APP sensor terminal 5	EC-1608, "Wiring Diagram"
91	EVAP control system pressure sensor terminal 3	EC-1484, "Wiring Diagram"

OK or NG

OK >> GO TO 5.
NG >> Repair short to ground or short to power in harness or connectors.

5. CHECK REFRIGERANT PRESSURE SENSOR

Refer to MTC-27.

OK or NG

OK >> GO TO 6.
NG >> Replace refrigerant pressure sensor.

6. CHECK EVAP CONTROL SYSTEM PRESSURE SENSOR

Refer to EC-1488, "Component Inspection".

OK or NG

OK >> GO TO 7.
NG >> Replace EVAP control system pressure sensor.

7. CHECK APP SENSOR

Refer to EC-1611, "Component Inspection".

OK or NG

OK >> GO TO 13.
NG >> GO TO 8.

8. REPLACE ACCELERATOR PEDAL ASSEMBLY

1. Replace accelerator pedal assembly.
2. Perform EC-1193, "Accelerator Pedal Released Position Learning".
3. Perform EC-1193, "Throttle Valve Closed Position Learning".
4. Perform EC-1193, "Idle Air Volume Learning".

>> **INSPECTION END**

9. CHECK CKP SENSOR (POS) GROUND CIRCUIT FOR OPEN AND SHORT

1. Turn ignition switch OFF.
2. Disconnect ECM harness connector.
3. Check harness continuity between CKP sensor (POS) terminal 2 and ECM terminal 60.
   Refer to Wiring Diagram.

   Continuity should exist.

4. Also check harness for short to ground and short to power.

OK or NG

OK >> GO TO 10.
NG >> Repair open circuit or short to ground or short to power in harness or connectors.

10. CHECK CKP SENSOR (POS) INPUT SIGNAL CIRCUIT FOR OPEN AND SHORT

1. Check harness continuity between CKP sensor (POS) terminal 3 and ECM terminal 65.
   Refer to Wiring Diagram.

   Continuity should exist.

2. Also check harness for short to ground and short to power.

OK or NG

OK >> GO TO 11.
NG >> Repair open circuit or short to ground or short to power in harness or connectors.

11. CHECK CRANKSHAFT POSITION SENSOR (POS)

Refer to EC-1430, "Component Inspection".

OK or NG

OK >> GO TO 12.
NG >> Replace crankshaft position sensor (POS).

12. CHECK GEAR TOOTH

Visually check for chipping signal plate gear tooth.

OK or NG

OK >> GO TO 13.
NG >> Replace the signal plate.

13. CHECK INTERMITTENT INCIDENT

Refer to EC-1245.

>> **INSPECTION END**

Component Inspection

INFOID:0000000005285977

CRANKSHAFT POSITION SENSOR (POS)

1. Loosen the fixing bolt of the sensor.
2. Disconnect crankshaft position sensor (POS) harness connector.
3. Remove the sensor.
4. Visually check the sensor for chipping.

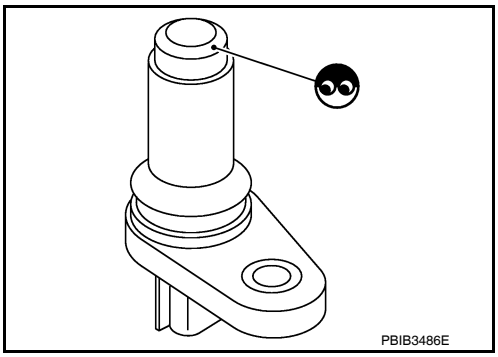

5. Check resistance as shown in the figure.

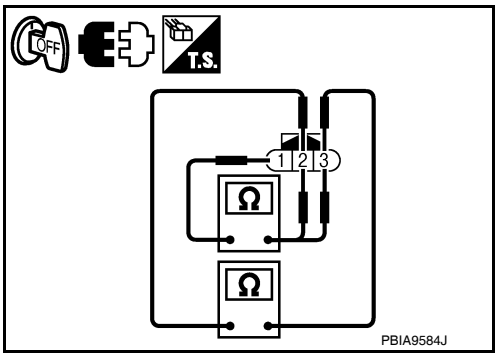

Terminal No. (Polarity)	Resistance Ω [at 25°C (77°F)]
1 (+) - 2 (-)	Except 0 or ∞
1 (+) - 3 (-)	
2 (+) - 3 (-)	

6. If NG, replace crankshaft position sensor (POS).

Removal and Installation

INFOID:0000000005285978

CRANKSHAFT POSITION SENSOR (POS)

Refer to EM-188.

DTC P0340 CMP SENSOR (PHASE)

Component Description

INFOID:0000000005285979

The camshaft position sensor (PHASE) senses the protrusion of camshaft (INT) to identify a particular cylinder. The camshaft position sensor (PHASE) senses the piston position. When the crankshaft position sensor (POS) system becomes inoperative, the camshaft position sensor (PHASE) provides various controls of engine parts instead, utilizing timing of cylinder identification signals. The sensor consists of a permanent magnet and Hall IC. When engine is running, the high and low parts of the teeth cause the gap with the sensor to change. The changing gap causes the magnetic field near the sensor to change. Due to the changing magnetic field, the voltage from the sensor changes.

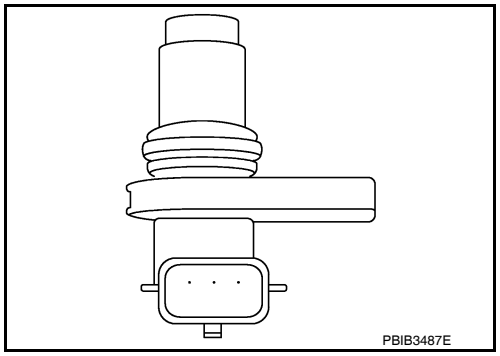

ECM receives the signals as shown in the figure.

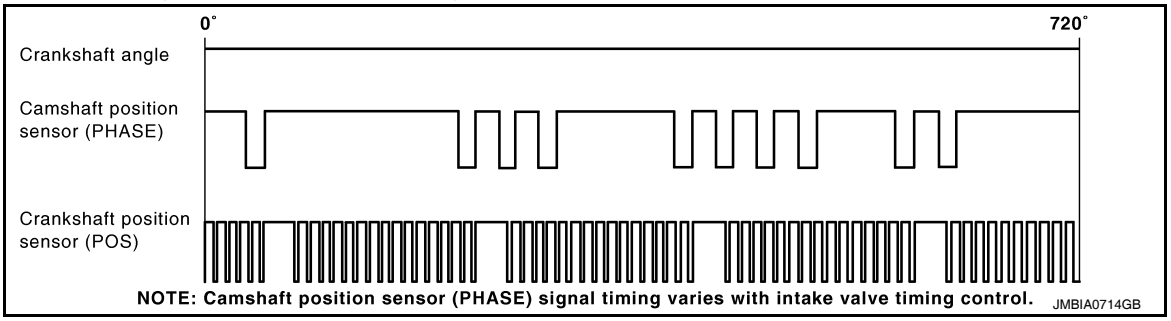

CONSULT-III Reference Value in Data Monitor Mode

INFOID:0000000005285980

Specification data are reference values.

Monitor item	Condition	Specification
ENG SPEED	• Run engine and compare CONSULT-III value with the tachometer indication.	Almost the same speed as the tachometer indication.

On Board Diagnosis Logic

INFOID:0000000005285981

NOTE:
If DTC P0340 is displayed with DTC P0643, first perform the trouble diagnosis for DTC P0643. Refer to EC-1530.

DTC No.	Trouble diagnosis name	DTC detecting condition	Possible cause
P0340 0340	Camshaft position sensor (PHASE) circuit	• The cylinder No. signal is not sent to ECM for the first few seconds during engine cranking. • The cylinder No. signal is not set to ECM during engine running. • The cylinder No. signal is not in the normal pattern during engine running.	• Harness or connectors [Camshaft position sensor (PHASE) circuit is open or shorted.] • Camshaft position sensor (PHASE) • Camshaft (INT) • Starter motor (Refer to SC-11.) • Starting system circuit (Refer to SC-11.) • Dead (Weak) battery

DTC Confirmation Procedure

INFOID:0000000005285982

NOTE:
If DTC Confirmation Procedure has been previously conducted, always turn ignition switch OFF and wait at least 10 seconds before conducting the next test.
TESTING CONDITION:
Before performing the following procedure, confirm that battery voltage is more than 10.5 V with ignition switch ON.

1. Crank engine for at least 2 seconds and run it for at least 5 seconds at idle speed.

2. Check 1st trip DTC.
3. If 1st trip DTC is detected, go to EC-1433, "Diagnosis Procedure".
   If 1st trip DTC is not detected, go to next step.
4. Maintain engine speed at more than 800 rpm for at least 5 seconds.
5. Check 1st trip DTC.
6. If 1st trip DTC is detected, go to EC-1433, "Diagnosis Procedure".

Wiring Diagram

INFOID:0000000005285983

EC-PHASE-01

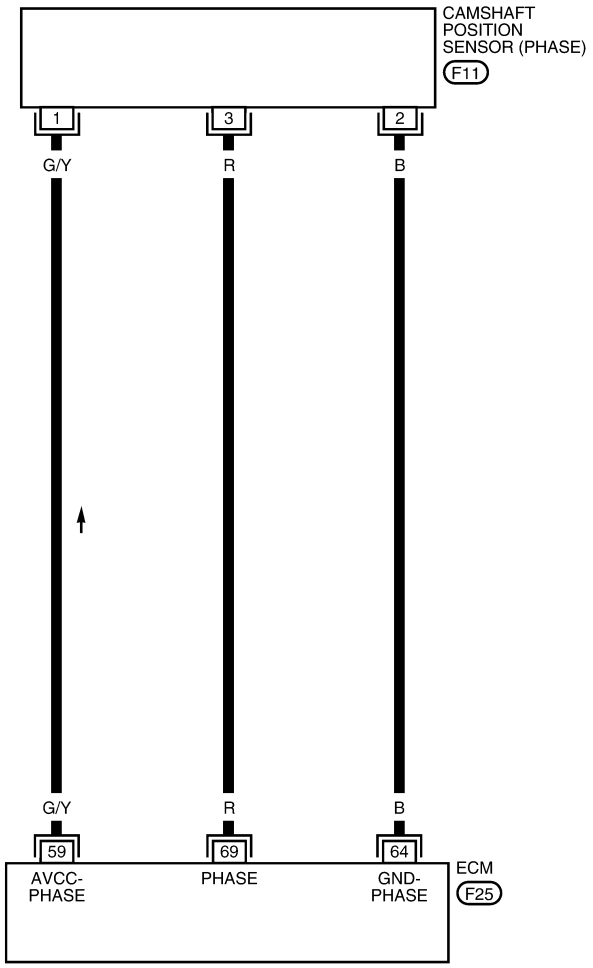

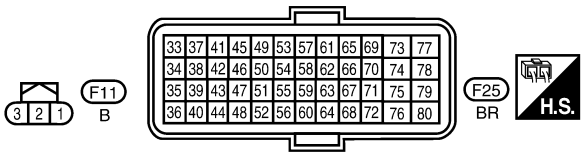

BBWA3041E

Specification data are reference values and are measured between each terminal and ground.
Pulse signal is measured by CONSULT-III.

CAUTION:

Never use ECM ground terminals when measuring input/output voltage. Doing so may result in damage to the ECM's transistor. Use a ground other than ECM terminals, such as the ground.

TERMINAL NO.	WIRE COLOR	ITEM	CONDITION	DATA (DC Voltage)
59	G/Y	Sensor power supply [Camshaft position sensor (PHASE)]	**[Ignition switch: ON]**	Approximately 5 V
64	B	Sensor ground [Camshaft position sensor (PHASE)]	**[Engine is running]** • **Warm-up condition** • Idle speed	Approximately 0 V
69	R	Camshaft position sensor (PHASE)	**[Engine is running]** • **Warm-up condition** • Idle speed **NOTE:** The pulse cycle changes depending on rpm at idle	1.0 - 2.0 V★ 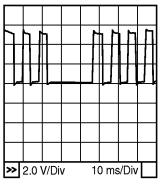 PBIB2986E
			[Engine is running] • Engine speed: 2,000 rpm	1.0 - 2.0 V★ 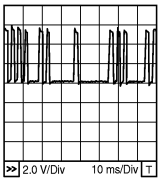 PBIB2987E

★: Average voltage for pulse signal (Actual pulse signal can be confirmed by oscilloscope.)

Diagnosis Procedure

INFOID:0000000005285984

1. CHECK STARTING SYSTEM

Turn ignition switch to START position.

Does the engine turn over?

Does the starter motor operate?

Yes or No

Yes >> GO TO 2.
No >> Check starting system. (Refer to SC-11.)

2. CHECK GROUND CONNECTIONS

1. Turn ignition switch OFF.
2. Loosen and retighten ground screws on the body.

Refer to EC-1251, "Ground Inspection".

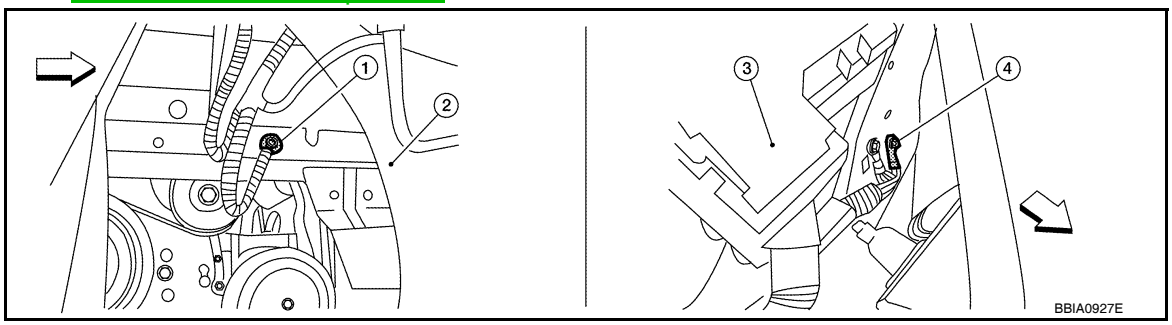

⇦: Vehicle front

1. Body ground E9 (view with front wheel RH and fender protector RH removed.)
2. Washer tank
3. Fuse and fusible link box
4. Body ground E15

OK or NG

OK >> GO TO 3.
NG >> Repair or replace ground connections.

3. CHECK CAMSHAFT POSITION (CMP) SENSOR (PHASE) POWER SUPPLY CIRCUIT

1. Disconnect camshaft position (CMP) sensor (PHASE) (1) harness connector.
- ⇦: Vehicle front
2. Turn ignition switch ON.

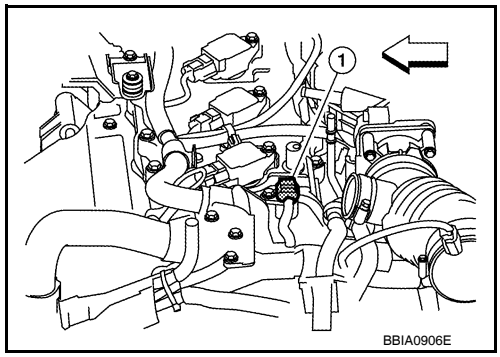

3. Check voltage between CMP sensor (PHASE) terminal 1 and ground with CONSULT-III or tester.

Voltage: Approximately 5 V

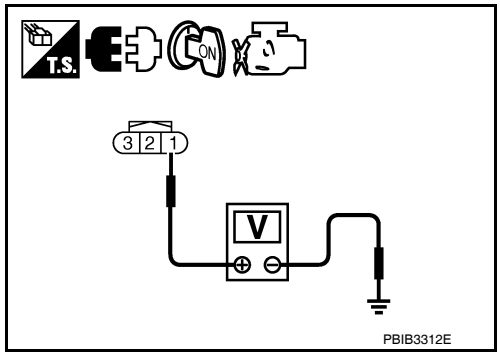

OK or NG

OK >> GO TO 4.
NG >> Repair open circuit or short to ground or short to power in harness or connectors.

4. CHECK CMP SENSOR (PHASE) GROUND CIRCUIT FOR OPEN AND SHORT

1. Turn ignition switch OFF.
2. Disconnect ECM harness connector.
3. Check harness continuity between CMP sensor (PHASE) terminal 2 and ECM terminal 64. Refer to Wiring Diagram.

Continuity should exist.

4. Also check harness for short to ground and short to power.

OK or NG

OK >> GO TO 5.
NG >> Repair open circuit or short to ground or short to power in harness or connectors.

5. CHECK CMP SENSOR (PHASE) INPUT SIGNAL CIRCUIT FOR OPEN AND SHORT

1. Check harness continuity between CMP sensor (PHASE) terminal 3 and ECM terminal 69. Refer to Wiring Diagram.

Continuity should exist.

2. Also check harness for short to ground and short to power.

OK or NG

OK >> GO TO 6.
NG >> Repair open circuit or short to ground or short to power in harness or connectors.

6. CHECK CAMSHAFT POSITION SENSOR (PHASE)

Refer to EC-1435, "Component Inspection".

OK or NG

OK >> GO TO 7.
NG >> Replace camshaft position sensor (PHASE).

7. CHECK CAMSHAFT (INTAKE)

Check the following.
- Accumulation of debris to the signal plate of camshaft (1) rear end
- Chipping signal plate of camshaft rear end

OK or NG

OK >> GO TO 8.
NG >> Remove debris and clean the signal plate of camshaft rear end or replace camshaft.

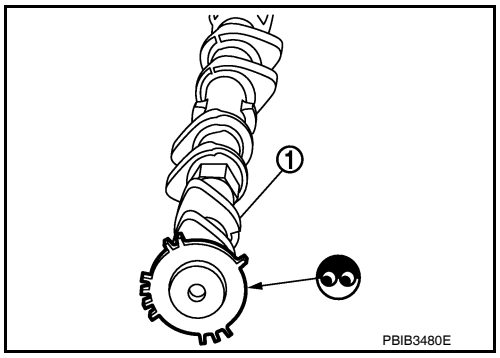

8. CHECK INTERMITTENT INCIDENT

Refer to EC-1245.

>> **INSPECTION END**

Component Inspection

INFOID:0000000005285985

CAMSHAFT POSITION SENSOR (PHASE)

1. Loosen the fixing bolt of the sensor.
2. Disconnect camshaft position sensor (PHASE) harness connector.
3. Remove the sensor.
4. Visually check the sensor for chipping.

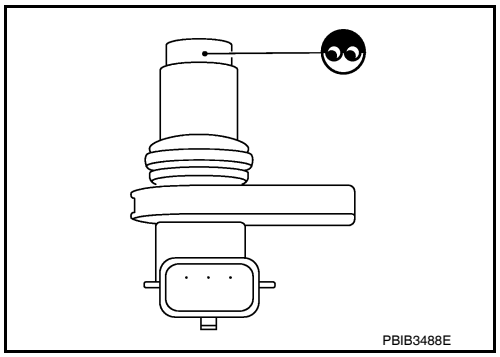

5. Check resistance as shown in the figure.

Terminal No. (Polarity)	Resistance [at 25°C (77°F)]
1 (+) - 2 (-)	Except 0 or ∞ Ω
1 (+) - 3 (-)	
2 (+) - 3 (-)	

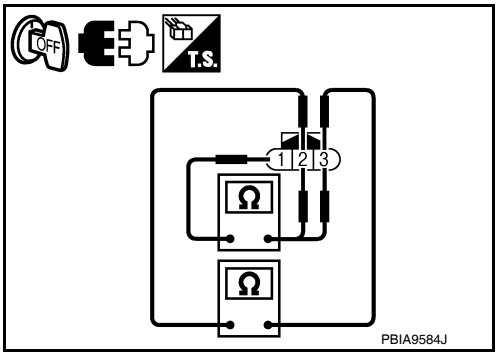

6. If NG, replace camshaft position sensor (PHASE).

Removal and Installation

INFOID:0000000005285986

CAMSHAFT POSITION SENSOR (PHASE)

Refer to EM-153.

DTC P0420, P0430 THREE WAY CATALYST FUNCTION

On Board Diagnosis Logic

INFOID:0000000005285987

The ECM monitors the switching frequency ratio of air fuel ratio (A/F) sensor 1 and heated oxygen sensor 2.
A three way catalyst (manifold) with high oxygen storage capacity will indicate a low switching frequency of heated oxygen sensor 2. As oxygen storage capacity decreases, the heated oxygen sensor 2 switching frequency will increase.
When the frequency ratio of air fuel ratio (A/F) sensor 1 and heated oxygen sensor 2 approaches a specified limit value, the three way catalyst (manifold) malfunction is diagnosed.

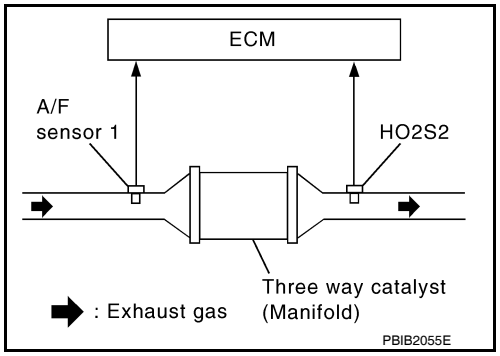

DTC No.	Trouble diagnosis name	DTC detecting condition	Possible cause
P0420 0420 (Bank 1)	Catalyst system efficiency below threshold	• Three way catalyst (manifold) does not operate properly. • Three way catalyst (manifold) does not have enough oxygen storage capacity.	• Three way catalyst (manifold) • Exhaust tube • Intake air leaks • Fuel injector • Fuel injector leaks • Spark plug • Improper ignition timing
P0430 0430 (Bank 2)			

DTC Confirmation Procedure

INFOID:0000000005285988

NOTE:
If DTC Confirmation Procedure has been previously conducted, always turn ignition switch OFF and wait at least 10 seconds before conducting the next test.

WITH CONSULT-III

TESTING CONDITION:
Do not maintain engine speed for more than the specified minutes below.

1. Turn ignition switch ON and select “DATA MONITOR” mode with CONSULT-III.
2. Start engine and warm it up to the normal operating temperature.
3. Turn ignition switch OFF and wait at least 10 seconds.
4. Start engine and keep the engine speed between 3,500 and 4,000 rpm for at least 1 minute under no load.
5. Let engine idle for 1 minute.
6. Check that “COOLAN TEMP/S” indicates more than 70°C (158°F).
   If not, warm up engine and go to next step when “COOLAN TEMP/S” indication reaches to 70°C (158°F).
7. Open engine hood.
8. Select “DTC & SRT CONFIRMATION” then “SRT WORK SUPPORT” mode with CONSULT-III.
9. Rev engine up to between 2,000 to 3,000 rpm and hold it for 3 consecutive minutes then release the accelerator pedal completely.
   If “INCMP” of “CATALYST” changed to “CMPLT”, go to step 12.
10. Wait 5 seconds at idle.
11. Rev engine up to between 2,000 to 3,000 rpm and maintain it until “INCMP” of “CATALYST” changes to “CMPLT” (It will take approximately 5 minutes).
    If not “CMPLT”, stop engine and cool it down to less than 70°C (158°F) and then retest from step 1.
12. Select “SELF-DIAG RESULTS” mode with CONSULT-III.
13. Confirm that 1st trip DTC is not detected.
    If 1st trip DTC is detected, go to EC-1438, "Diagnosis Procedure".

Overall Function Check

INFOID:0000000005285989

Use this procedure to check the overall function of the three way catalyst (manifold). During this check, a 1st trip DTC might not be confirmed.

WITH GST

1. Start engine and warm it up to the normal operating temperature.
2. Turn ignition switch OFF and wait at least 10 seconds.
3. Start engine and keep the engine speed between 3,500 and 4,000 rpm for at least 1 minute under no load.
4. Let engine idle for 1 minute.
5. Open engine hood.
6. Set voltmeter probe between ECM terminals 33 [HO2S2 (B1) signal] or 34 [HO2S2 (B2) signal] and ground.
7. Keep engine speed at 2,500 rpm constant under no load.
8. Check that the voltage does not vary for more than 5 seconds. If the voltage fluctuation cycle takes less than 5 seconds, go to EC-1438, "Diagnosis Procedure".
   - 1 cycle: 0.6 - 1.0 → 0 - 0.3 → 0.6 - 1.0

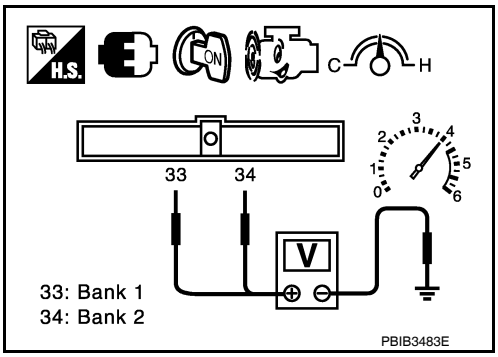

Diagnosis Procedure

INFOID:0000000005285990

1. CHECK EXHAUST SYSTEM

Visually check exhaust tubes and muffler for dents.

OK or NG

OK >> GO TO 2.
NG >> Repair or replace.

2. CHECK EXHAUST GAS LEAK

1. Start engine and run it at idle.
2. Listen for an exhaust gas leak before the three way catalyst (manifold).

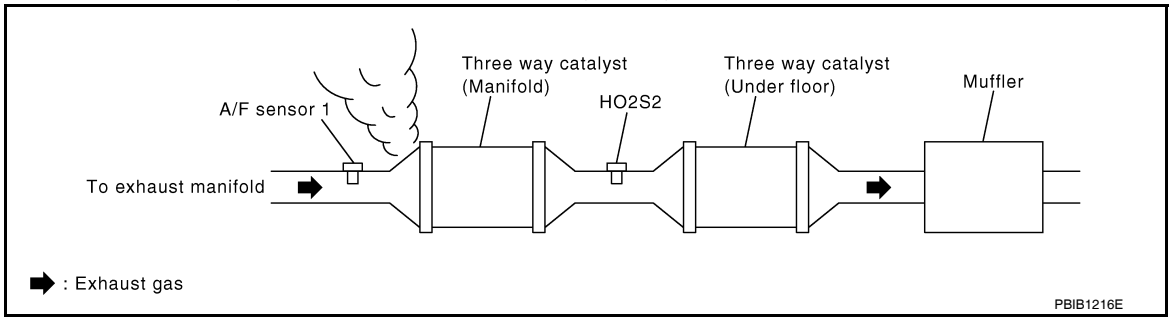

OK or NG

OK >> GO TO 3.
NG >> Repair or replace.

3. CHECK INTAKE AIR LEAK

Listen for an intake air leak after the mass air flow sensor.

OK or NG

OK >> GO TO 4.
NG >> Repair or replace.

4. CHECK IGNITION TIMING

Check the following items. Refer to EC-1187, "Basic Inspection".

Items	Specifications
Target idle speed	CVT:650 ± 50 rpm (in P or N position)
	M/T: 800 ± 50 rpm (in Neutral position)
Ignition timing	CVT: 10 ± 5° BTDC (in P or N position)
	M/T: 10 ± 5° BTDC (in Neutral position)

OK or NG

OK >> GO TO 5.
NG >> Follow the EC-1187, "Basic Inspection".

5. CHECK FUEL INJECTORS

1. Stop engine and turn ignition switch OFF.
2. Disconnect ECM harness connector.
3. Turn ignition switch ON.
4. Check voltage between ECM terminals 29, 30, 31, 32 and ground with CONSULT-III or tester. Refer to Wiring Diagram for fuel injectors, EC-1648, "Wiring Diagram".

Voltage: Battery voltage

OK or NG

OK >> GO TO 6.
NG >> Perform EC-1649, "Diagnosis Procedure".

6. CHECK FUNCTION OF IGNITION COIL-I

CAUTION:
Perform following procedure in a place with no combustible objects and good ventilation.

1. Turn ignition switch OFF.
2. Remove fuel pump fuse (1) in IPDM E/R (2) to release fuel pressure.
   NOTE:
   Do not use CONSULT-III to release fuel pressure, or fuel pressure applies again during the following procedure.

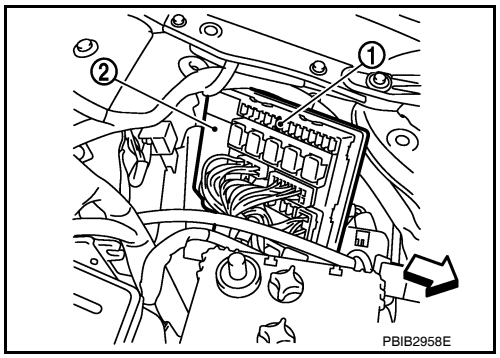

- ⇦: Vehicle front
3. Start engine.
4. After engine stalls, crank it two or three times to release all fuel pressure.
5. Turn ignition switch OFF.
6. Remove all ignition coil harness connectors to avoid the electrical discharge from the ignition coils.
7. Remove ignition coil and spark plug of the cylinder to be checked.
8. Crank engine for 5 seconds or more to remove combustion gas in the cylinder.
9. Connect spark plug and harness connector to ignition coil.
10. Fix ignition coil using a rope etc. with gap of 13 - 17 mm (0.52 - 0.66 in) between the edge of the spark plug and grounded metal portion as shown in the figure.
11. Crank engine for approximately 3 seconds, and check whether spark is generated between the spark plug and the grounded metal portion.

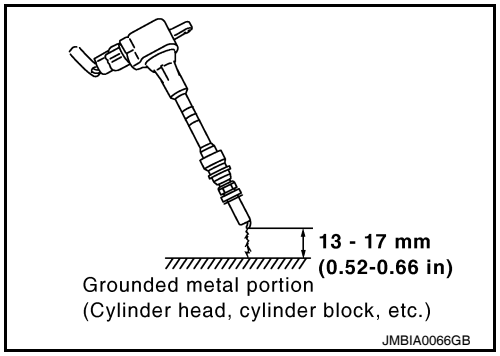

Spark should be generated.

CAUTION:
- **During the operation, always stay 0.5 m (19.7 in) or more away from the spark plag and the ignition coil. Be careful not to get an electrical shock while checking, because the electrical discharge voltage becomes 20 kV or more.**
- **It might cause to damage the ignition coil if the gap of more than 17 mm (0.66 in) is made.**

NOTE:

When the gap is less than 13 mm (0.52 in), a the spark might be generated even if the coil is malfunctioning.

OK or NG

OK >> GO TO 10.
NG >> GO TO 7.

7. CHECK FUNCTION OF IGNITION COIL-II

1. Turn ignition switch OFF.
2. Disconnect spark plug and connect non- malfunctioning spark plug.
3. Crank engine for approximately 3 seconds, and recheck whether spark is generated between the spark plug and the grounded metal portion.

Spark should be generated.

OK or NG

OK >> GO TO 8.
NG >> Check ignition coil, power transistor and their circuits. Refer to EC-1657.

8. CHECK SPARK PLUG

Check the initial spark plug for fouling, etc.

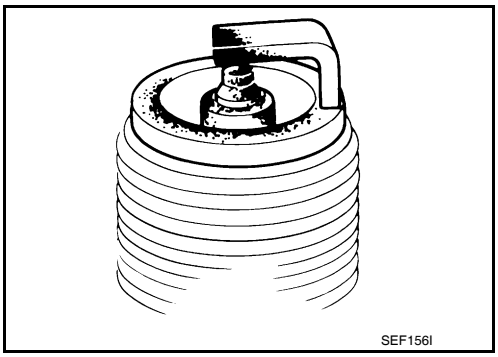

OK or NG

OK >> Replace spark plug(s) with standard type one(s). For spark plug type, refer to MA-39, "SPARK PLUG : Removal and Installation".
NG >> 1. Repair or clean spark plug.
2. GO TO 9.

9. CHECK FUNCTION OF IGNITION COIL-III

1. Reconnect the initial spark plugs.
2. Crank engine for approximately 3 seconds, and recheck whether spark is generated between the spark plug and the grounded portion.

Spark should be generated.

OK or NG

OK >> **INSPECTION END**
NG >> Replace spark plug (s) with standard type one (s). For spark plug type, refer to MA-39, "SPARK PLUG : Removal and Installation".

10. CHECK FUEL INJECTOR

1. Turn ignition switch OFF.
2. Remove fuel injector assembly.
   Refer to EM-148.
   Keep fuel hose and all fuel injectors connected to fuel tube.
3. Disconnect all ignition coil harness connectors.
4. Reconnect all fuel injector harness connectors disconnected.
5. Turn ignition switch ON.
   Check that fuel does not drip from fuel injector.

OK or NG

OK (Does not drip.)>>GO TO 11.
NG (Drips.)>>Replace the fuel injector (s) from which fuel is dripping.

11. CHECK INTERMITTENT INCIDENT

Refer to EC-1245.

Trouble is fixed.>>**INSPECTION END**
Trouble is not fixed.>>Replace malfunctioning three way catalyst (manifold).

DTC P0441 EVAP CONTROL SYSTEM

System Description

INFOID:0000000005285991

NOTE:
If DTC P0441 is displayed with other DTC such as P2122, P2123 P2127, P2128, P2138, first perform trouble diagnosis for other DTC.

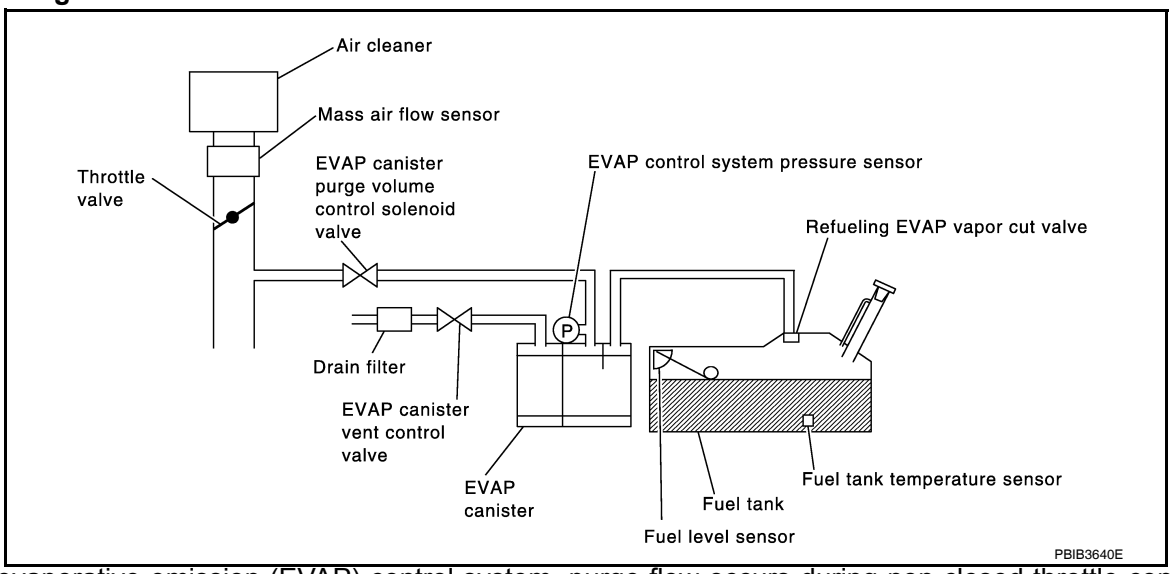

In this evaporative emission (EVAP) control system, purge flow occurs during non-closed throttle conditions. Purge volume is related to air intake volume. Under normal purge conditions (non-closed throttle), the EVAP canister purge volume control solenoid valve is open to admit purge flow. Purge flow exposes the EVAP control system pressure sensor to intake manifold vacuum.

On Board Diagnosis Logic

INFOID:0000000005285992

Under normal conditions (non-closed throttle), sensor output voltage indicates if pressure drop and purge flow are adequate. If not, a malfunction is determined.

DTC No.	Trouble diagnosis name	DTC detecting condition	Possible cause
P0441 0441	EVAP control system incorrect purge flow	• EVAP control system does not operate properly. • EVAP control system has a leak between intake manifold and EVAP control system pressure sensor.	• EVAP canister purge volume control solenoid valve stuck closed • EVAP control system pressure sensor and the circuit • Loose, disconnected or improper connection of rubber tube • Blocked rubber tube • Cracked EVAP canister • EVAP canister purge volume control solenoid valve circuit • Accelerator pedal position sensor • Blocked purge port • EVAP canister vent control valve • Drain filter

DTC Confirmation Procedure

INFOID:0000000005285993

CAUTION:
Always drive vehicle at a safe speed.
NOTE:
If DTC Confirmation Procedure has been previously conducted, always turn ignition switch OFF and wait at least 10 seconds before conducting the next test.
TESTING CONDITION:
Always perform test at a temperature of 5°C (41°F) or more.

WITH CONSULT-III

1. Start engine and warm it up to normal operating temperature.
2. Turn ignition switch OFF and wait at least 10 seconds.
3. Start engine and let it idle for at least 70 seconds.
4. Select “PURG FLOW P0441” of “EVAPORATIVE SYSTEM” in “DTC & SRT CONFIRMATION” mode with CONSULT-III.
5. Touch “START”.
   If “COMPLETED” is displayed, go to step 7.
6. When the following conditions are met, “TESTING” will be displayed on the CONSULT-III screen. Maintain the conditions continuously until “TESTING” changes to “COMPLETED”. (It will take at least 35 seconds.)

Selector lever	Suitable position
VHCL SPEED SE	32 - 120 km/h (20 - 75 MPH)
ENG SPEED	500 - 3,800 rpm
B/FUEL SCHDL	1.0 - 10.0 msec
COOLAN TEMP/S	More than 0°C (32 °F)

If TESTING does not change for a long time, retry from step 2.

7. Check that “OK” is displayed after touching “SELF-DIAG RESULTS”. If “NG” is displayed, refer to EC-1443, "Diagnosis Procedure".

Overall Function Check

INFOID:0000000005285994

Use this procedure to check the overall monitoring function of the EVAP control system purge flow monitoring. During this check, a 1st trip DTC might not be confirmed.

WITH GST

1. Lift up drive wheels.
2. Start engine and warm it up to normal operating temperature.
3. Turn ignition switch OFF and wait at least 10 seconds.
4. Start engine and wait at least 70 seconds.
5. Set voltmeter probes to ECM terminals 42 (EVAP control system pressure sensor signal) and ground.
6. Check EVAP control system pressure sensor value at idle speed and note it.
7. Establish and maintain the following conditions for at least 1 minute.

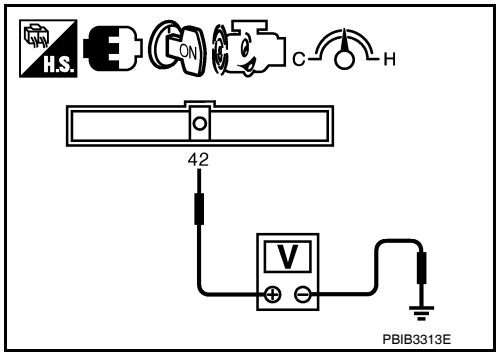

Air conditioner switch	ON
Headlamp switch	ON
Rear window defogger switch	ON
Engine speed	Approx. 3,000 rpm
Selector lever	Any position other than P, N or R

8. Verify that EVAP control system pressure sensor value stays 0.1 V less than the value at idle speed (measured at step 6) for at least 1 second.
9. If NG, go to EC-1443, "Diagnosis Procedure".

Diagnosis Procedure

INFOID:0000000005285995

1. CHECK EVAP CANISTER

1. Turn ignition switch OFF.
2. Check EVAP canister for cracks.

OK or NG

OK (With CONSULT-III)>>GO TO 2.
OK (Without CONSULT-III)>>GO TO 3.
NG >> Replace EVAP canister.

2. CHECK PURGE FLOW

With CONSULT-III

1. Disconnect vacuum hose connected to EVAP canister purge volume control solenoid valve at EVAP service port and install vacuum gauge. For the location of EVAP service port, refer to EC-1138, "Description".
2. Start engine and let it idle.
3. Select “PURG VOL CONT/V” in “ACTIVE TEST” mode with CONSULT-III.
4. Rev engine up to 2,000 rpm.
5. Touch “Qd” and “Qu” on CONSULT-III screen to adjust “PURG VOL CONT/V” opening and check vacuum existence.

PURG VOL CONT/V	VACUUM
100%	Should exist.
0%	Should not exist.

OK or NG

OK >> GO TO 7.
NG >> GO TO 4.

3. CHECK PURGE FLOW

Without CONSULT-III

1. Start engine and warm it up to normal operating temperature.
2. Stop engine.
3. Disconnect vacuum hose connected to EVAP canister purge volume control solenoid valve at EVAP service port and install vacuum gauge. For the location of EVAP service port, refer to EC-1138, "Description".
4. Start engine and let it idle.
   Do not depress accelerator pedal even slightly.
5. Check vacuum gauge indication before 60 seconds pass after starting engine.

   Vacuum should not exist.

6. Rev engine up to 2,000 rpm after 100 seconds pass after starting engine.

   Vacuum should exist.

OK or NG

OK >> GO TO 7.
NG >> GO TO 4.

4. CHECK EVAP PURGE LINE

1. Turn ignition switch OFF.
2. Check EVAP purge line for improper connection or disconnection.
   Refer to EC-1138, "Description".

OK or NG

OK >> GO TO 5.
NG >> Repair it.

5. CHECK EVAP PURGE HOSE AND PURGE PORT

1. Disconnect purge hoses connected to EVAP service port **A** and EVAP canister purge volume control solenoid valve **B**.
2. Blow air into each hose and EVAP purge port **C**.

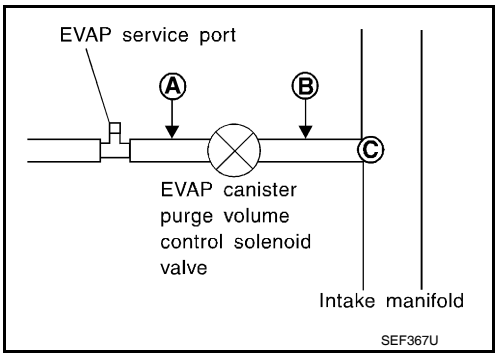

3. Check that air flows freely.

OK or NG

OK (With CONSULT-III)>>GO TO 6.
OK (Without CONSULT-III)>>GO TO 7.
NG >> Repair or clean hoses and/or purge port.

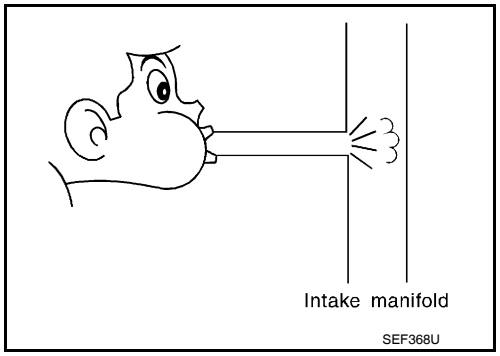

6. CHECK EVAP CANISTER PURGE VOLUME CONTROL SOLENOID VALVE

With CONSULT-III

1. Start engine.
2. Perform “PURG VOL CONT/V” in “ACTIVE TEST” mode with CONSULT-III. Check that engine speed varies according to the valve opening.

OK or NG

OK >> GO TO 8.
NG >> GO TO 7.

7. CHECK EVAP CANISTER PURGE VOLUME CONTROL SOLENOID VALVE

Refer to EC-1467, "Component Inspection".

OK or NG

OK >> GO TO 8.
NG >> Replace EVAP canister purge volume control solenoid valve.

8. CHECK EVAP CONTROL SYSTEM PRESSURE SENSOR CONNECTOR

1. Disconnect EVAP control system pressure sensor harness connector.
2. Check connectors for water.

Water should not exist

OK or NG

OK >> GO TO 9.
NG >> Replace EVAP control system pressure sensor.

9. CHECK EVAP CONTROL SYSTEM PRESSURE SENSOR FUNCTION

Refer to EC-1482 for DTC P0452 and EC-1489 for DTC P0453.

OK or NG

OK >> GO TO 10.
NG >> Replace EVAP control system pressure sensor.

10. CHECK RUBBER TUBE FOR CLOGGING

1. Disconnect rubber tube connected to EVAP canister vent control valve.
2. Check the rubber tube for clogging.

OK or NG

OK >> GO TO 11.
NG >> Clean the rubber tube using an air blower.

11. CHECK DRAIN FILTER

Refer to EC-1446, "Component Inspection".

OK or NG

OK >> GO TO 12.
NG >> Replace drain filter.

12. CHECK EVAP CANISTER VENT CONTROL VALVE

Refer to EC-1472, "Component Inspection".

OK or NG

OK >> GO TO 13.
NG >> Replace EVAP canister vent control valve.

13. CHECK EVAP PURGE LINE

Inspect EVAP purge line (pipe and rubber tube). Check for evidence of leaks.
Refer to EC-1138, "Description".

OK or NG

OK >> GO TO 14.
NG >> Replace it.

14. CLEAN EVAP PURGE LINE

Clean EVAP purge line (pipe and rubber tube) using air blower.

>> GO TO 15.

15. CHECK INTERMITTENT INCIDENT

Refer to EC-1245.

>> **INSPECTION END**

Component Inspection

INFOID:0000000005285996

DRAIN FILTER

1. Check visually for insect nests in the drain filter air inlet.
2. Check visually for cracks or flaws in the appearance.
3. Check visually for cracks or flaws in the hose.
4. Blow air into port A and check that it flows freely out of port B.
5. Block port B.
6. Blow air into port A and check that there is no leakage.
7. If NG, replace drain filter.

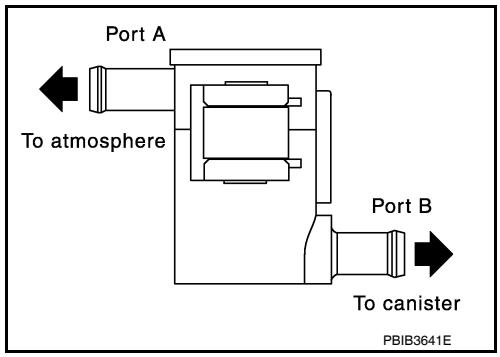

DTC P0442 EVAP CONTROL SYSTEM

On Board Diagnosis Logic

INFOID:0000000005285997

This diagnosis detects leaks in the EVAP purge line using engine intake manifold vacuum.
If pressure does not increase, the ECM will check for leaks in the line between the fuel tank and EVAP canister purge volume control solenoid valve, under the following Vacuum test conditions.
The EVAP canister vent control valve is closed to shut the EVAP purge line off. The EVAP canister purge volume control solenoid valve will then be opened to depressurize the EVAP purge line using intake manifold vacuum. After this occurs, the EVAP canister purge volume control solenoid valve will be closed.

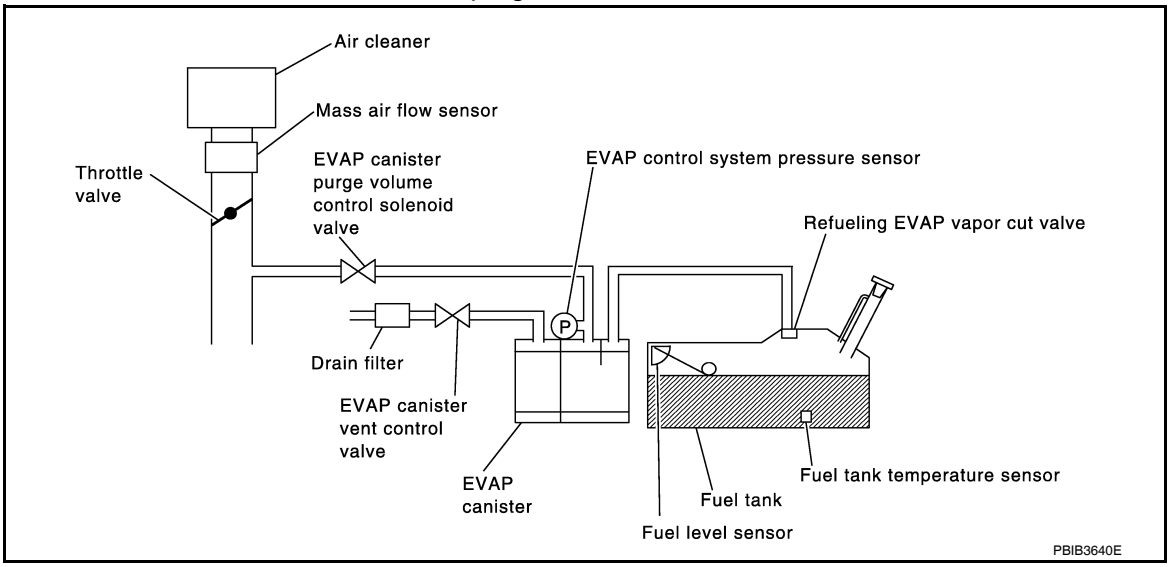

DTC No.	Trouble diagnosis name	DTC detecting condition	Possible cause
P0442 0442	EVAP control system small leak detected (negative pressure)	EVAP control system has a leak, EVAP control system does not operate properly.	• Incorrect fuel tank vacuum relief valve • Incorrect fuel filler cap used • Fuel filler cap remains open or fails to close. • Foreign matter caught in fuel filler cap. • Leak is in line between intake manifold and EVAP canister purge volume control solenoid valve. • Foreign matter caught in EVAP canister vent control valve. • EVAP canister or fuel tank leaks • EVAP purge line (pipe and rubber tube) leaks • EVAP purge line rubber tube bent • Loose or disconnected rubber tube • EVAP canister vent control valve and the circuit • EVAP canister purge volume control solenoid valve and the circuit • Fuel tank temperature sensor • O-ring of EVAP canister vent control valve is missing or damaged • Drain filter • EVAP canister is saturated with water • EVAP control system pressure sensor • Fuel level sensor and the circuit • Refueling EVAP vapor cut valve • ORVR system leaks

CAUTION:
- **Use only a genuine NISSAN fuel filler cap as a replacement. If an incorrect fuel filler cap is used, the MIL may illuminate.**
- **If the fuel filler cap is not tightened properly, the MIL may illuminate.**
- **Use only a genuine NISSAN rubber tube as a replacement.**

DTC Confirmation Procedure

INFOID:0000000005285998

NOTE:
If DTC Confirmation Procedure has been previously conducted, always turn ignition switch OFF and wait at least 10 seconds before conducting the next test.

TESTING CONDITION:
- **Perform "DTC WORK SUPPORT" when the fuel level is between 1/4 and 3/4 full, and vehicle is placed on flat level surface.**
- **Always perform test at a temperature of 0 to 10°C (32 to 140°F).**
- **Open engine hood before conducting following procedure.**

WITH CONSULT-III

1. Turn ignition switch ON.
2. Turn ignition switch OFF and wait at least 10 seconds.
3. Turn ignition switch ON and select "DATA MONITOR" mode with CONSULT-III.
4. Check the following conditions are met.
   COOLAN TEMP/S: 0 - 100°C (32 - 212°F)
   INT/A TEMP SE: 0 - 60°C (32 - 140°F)
5. Select "EVAP SML LEAK P0442/P1442" of "EVAPORATIVE SYSTEM" in "DTC WORK SUPPORT" mode with CONSULT-III.
   Follow the instruction displayed.
   NOTE:
   If the engine speed cannot be maintained within the range displayed on the CONSULT-III screen, go to EC-1187, "Basic Inspection".
6. Check that "OK" is displayed.
   If "NG" is displayed, refer to EC-1448, "Diagnosis Procedure".

WITH GST

NOTE:
Be sure to read the explanation of Driving Pattern on EC-1155, "Emission-related Diagnostic Information" before driving vehicle.

1. Start engine.
2. Drive vehicle according to Driving Pattern, EC-1155, "Emission-related Diagnostic Information"
3. Stop vehicle.
4. Turn ignition switch OFF and wait at least 10 seconds and then turn ignition switch ON.
5. Select Service $07 with GST.

- If P0442 is displayed on the screen, go to EC-1448, "Diagnosis Procedure".
- If P0441 is displayed on the screen, go to EC-1443, "Diagnosis Procedure" for DTC P0441.

Diagnosis Procedure

INFOID:0000000005285999

1. CHECK FUEL FILLER CAP DESIGN

1. Turn ignition switch OFF.
2. Check for genuine NISSAN fuel filler cap design.

OK or NG

OK >> GO TO 2.
NG >> Replace with genuine NISSAN fuel filler cap.

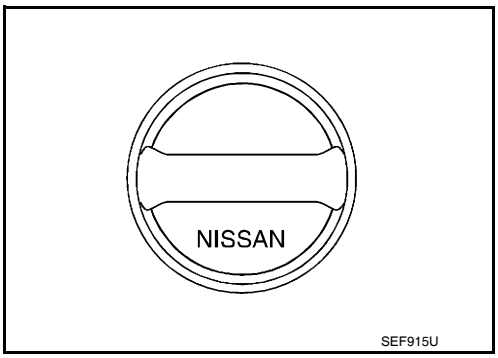

2. CHECK FUEL FILLER CAP INSTALLATION

Check that the cap is tightened properly by rotating the cap clockwise.

OK or NG

OK >> GO TO 3.
NG >> 1. Open fuel filler cap, then clean cap and fuel filler neck threads using air blower.

2. Retighten until reteaching sound is heard.

3. CHECK FUEL FILLER CAP FUNCTION

Check for air releasing sound while opening the fuel filler cap.

OK or NG

OK >> GO TO 5.
NG >> GO TO 4.

4. CHECK FUEL TANK VACUUM RELIEF VALVE

Refer to EC-1140, "Component Inspection".

OK or NG

OK >> GO TO 5.
NG >> Replace fuel filler cap with a genuine one.

5. INSTALL THE PRESSURE PUMP

To locate the EVAP leak, install EVAP service port (1) adapter and pressure pump to EVAP service port securely.

For the location of EVAP service port, refer to EC-1138, "Description".

- ⇦: Vehicle front

NOTE:
Improper installation of the EVAP service port adapter to the EVAP service port may cause leaking.

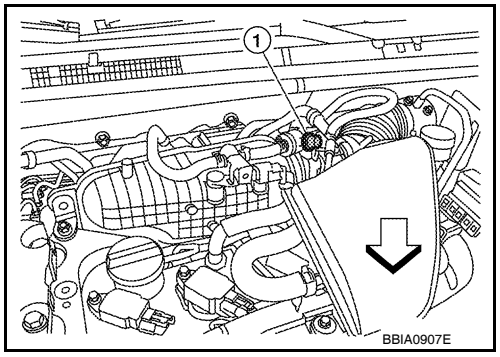

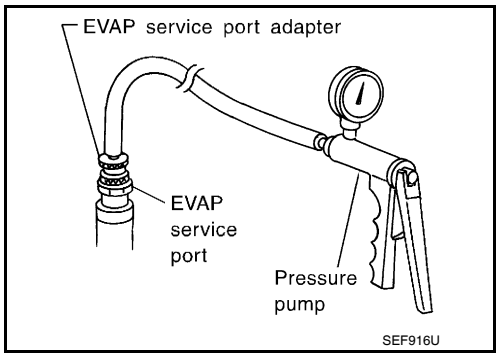

With CONSULT-III>>GO TO 6.
Without CONSULT-III>>GO TO 7.

6. CHECK FOR EVAP LEAK

With CONSULT-III

1. Turn ignition switch ON.
2. Select “EVAP SYSTEM CLOSE” of “WORK SUPPORT” mode with CONSULT-III.
3. Touch “START” and apply pressure into the EVAP line until the pressure indicator reaches the middle of the bar graph.

   CAUTION:
   - **Never use compressed air or a high pressure pump.**
   - **Never exceed 4.12 kPa (0.042 kg/cm^2, 0.6 psi) of pressure in the system.**

4. Using EVAP leak detector, locate the EVAP leak. For the leak detector, refer to the instruction manual for more details. Refer to EC-1138, "Description".

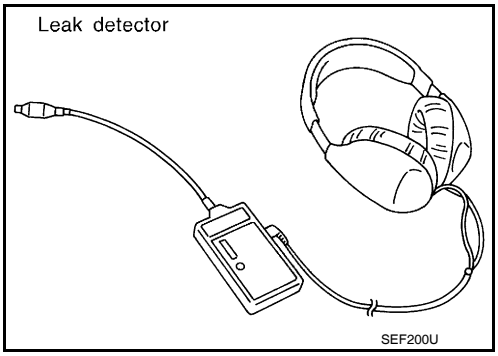

OK or NG

OK >> GO TO 8.
NG >> Repair or replace.

7. CHECK FOR EVAP LEAK

Without CONSULT-III

1. Turn ignition switch OFF.
2. Apply 12 volts DC to EVAP canister vent control valve. The valve will close. (Continue to apply 12 volts until the end of test.)
- This illustration is a view from under vehicle
- EVAP control system pressure sensor (1)
- EVAP canister (2)
- EVAP canister vent control valve (3)
3. Pressurize the EVAP line using pressure pump with 1.3 to 2.7 kPa (0.013 to 0.028 kg/cm^2, 0.19 to 0.39 psi), then remove pump and EVAP service port adapter.

   CAUTION:
   - **Never use compressed air or a high pressure pump.**
   - **Never exceed 4.12 kPa (0.042 kg/cm^2, 0.6 psi) of pressure in the system.**

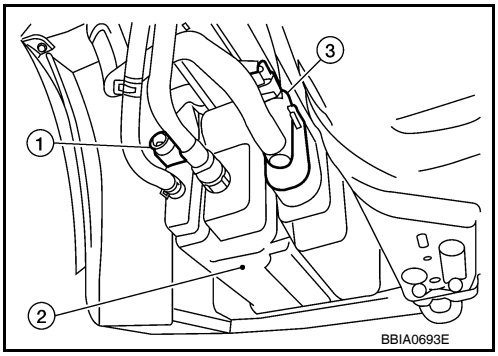

4. Using EVAP leak detector, locate the EVAP leak. For the leak detector, refer to the instruction manual for more details. Refer to EC-1138, "Description".

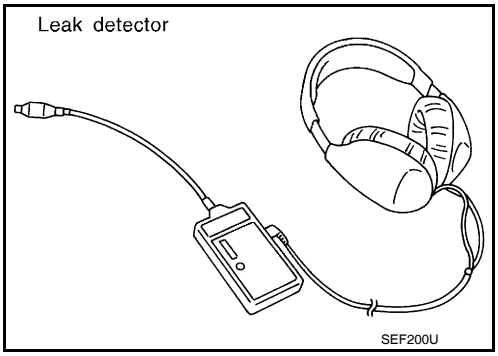

OK or NG

OK >> GO TO 8.
NG >> Repair or replace.

8. CHECK DRAIN FILTER

Refer to EC-1453, "Component Inspection".

OK or NG

OK >> GO TO 9.
NG >> Replace drain filter.

9. CHECK EVAP CANISTER VENT CONTROL VALVE

Check the following,
- EVAP canister vent control valve is installed properly.
  Refer to EC-1142, "Removal and Installation".
- EVAP canister vent control valve.
  Refer to EC-1472, "Component Inspection".

OK or NG

OK >> GO TO 10.
NG >> Repair or replace EVAP canister vent control valve and O-ring.

10. CHECK IF EVAP CANISTER SATURATED WITH WATER

1. Remove EVAP canister with EVAP canister vent control valve and EVAP control system pressure sensor attached.
2. Does water drain from the EVAP canister?

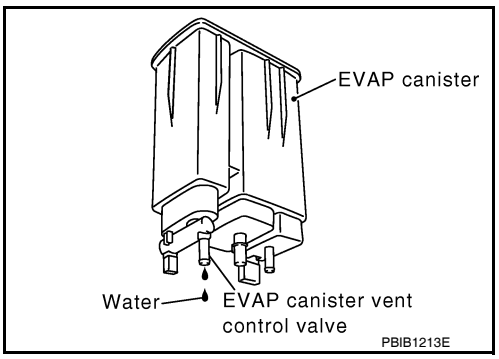

Yes or No

Yes >> GO TO 11.
No (With CONSULT-III)>>GO TO 13.
No (Without CONSULT-III)>>GO TO 14.

11. CHECK EVAP CANISTER

Weigh the EVAP canister with the EVAP canister vent control valve and EVAP control system pressure sensorattached.

The weight should be less than 1.9 kg (4.2 lb).

OK or NG

OK (With CONSULT-III)>>GO TO 13.
OK (Without CONSULT-III)>>GO TO 14.
NG >> GO TO 12.

12. DETECT MALFUNCTIONING PART

Check the following.
- EVAP canister for damage
- EVAP hose connected to EVAP canister and vehicle frame for clogging or poor connection

>> Repair hose or replace EVAP canister.

13. CHECK EVAP CANISTER PURGE VOLUME CONTROL SOLENOID VALVE OPERATION

With CONSULT-III

1. Disconnect vacuum hose to EVAP canister purge volume control solenoid valve at EVAP service port.
2. Start engine.
3. Perform “PURG VOL CONT/V” in “ACTIVE TEST” mode.
4. Touch “Qu” on CONSULT-III screen to increase “PURG VOL CONT/V” opening to 100%.
5. Check vacuum hose for vacuum.

Vacuum should exist.

OK or NG

OK >> GO TO 16.
NG >> GO TO 15.

14. CHECK EVAP CANISTER PURGE VOLUME CONTROL SOLENOID VALVE OPERATION

Without CONSULT-III

1. Start engine and warm it up to normal operating temperature.
2. Stop engine.
3. Disconnect vacuum hose to EVAP canister purge volume control solenoid valve at EVAP service port.
4. Start engine and let it idle for at least 80 seconds.
5. Check vacuum hose for vacuum when revving engine up to 2,000 rpm.

Vacuum should exist.

OK or NG

OK >> GO TO 17.
NG >> GO TO 15.

15. CHECK VACUUM HOSE

Check vacuum hoses for clogging or disconnection. Refer to EC-1214, "Vacuum Hose Drawing".

OK or NG

OK >> GO TO 16.
NG >> Repair or reconnect the hose.

16. CHECK EVAP CANISTER PURGE VOLUME CONTROL SOLENOID VALVE

Refer to EC-1467, "Component Inspection".

OK or NG

OK >> GO TO 17.
NG >> Replace EVAP canister purge volume control solenoid valve.

17. CHECK FUEL TANK TEMPERATURE SENSOR

Refer to EC-1405, "Component Inspection".

OK or NG

OK >> GO TO 18.
NG >> Replace fuel level sensor unit.

18. CHECK EVAP CONTROL SYSTEM PRESSURE SENSOR

Refer to EC-1488, "Component Inspection".

OK or NG

OK >> GO TO 19.
NG >> Replace EVAP control system pressure sensor.

19. CHECK EVAP PURGE LINE

Check EVAP purge line (pipe, rubber tube, fuel tank and EVAP canister) for cracks or improper connection. Refer to EC-1138.

OK or NG

OK >> GO TO 20.
NG >> Repair or reconnect the hose.

20. CLEAN EVAP PURGE LINE

Clean EVAP purge line (pipe and rubber tube) using air blower.

>> GO TO 21.

21. CHECK EVAP/ORVR LINE

Check EVAP/ORVR line between EVAP canister and fuel tank for clogging, kinks, looseness and improper connection. For location, refer to EC-1145.

OK or NG

OK >> GO TO 22.
NG >> Repair or replace hoses and tubes.

22. CHECK RECIRCULATION LINE

Check recirculation line between filler neck tube and fuel tank for clogging, kinks, cracks, looseness and improper connection.

OK or NG

OK >> GO TO 23.
NG >> Repair or replace hoses, tubes or filler neck tube.

23. CHECK REFUELING EVAP VAPOR CUT VALVE

Refer to EC-1148, "Component Inspection".

OK or NG

OK >> GO TO 24.
NG >> Replace refueling EVAP vapor cut valve with fuel tank.

24. CHECK FUEL LEVEL SENSOR

Refer to FL-6.

OK or NG

OK >> GO TO 25.
NG >> Replace fuel level sensor unit.

25. CHECK INTERMITTENT INCIDENT

Refer to EC-1245.

>> **INSPECTION END**

Component Inspection

INFOID:0000000005286000

DRAIN FILTER

1. Check visually for insect nests in the drain filter air inlet.
2. Check visually for cracks or flaws in the appearance.
3. Check visually for cracks or flaws in the hose.
4. Blow air into port A and check that it flows freely out of port B.
5. Block port B.
6. Blow air into port A and check that there is no leakage.
7. If NG, replace drain filter.

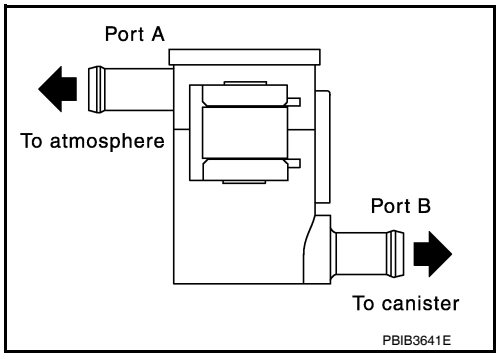

DTC P0443 EVAP CANISTER PURGE VOLUME CONTROL SOLENOID VALVE

Description

INFOID:0000000005286001

SYSTEM DESCRIPTION

Sensor	Input Signal to ECM	ECM function	Actuator
Crankshaft position sensor (POS) Camshaft position sensor (PHASE)	Engine speed*1	EVAP canister purge flow control	EVAP canister purge volume control solenoid valve
Mass air flow sensor	Amount of intake air		
Engine coolant temperature sensor	Engine coolant temperature		
Battery	Battery voltage*1		
Throttle position sensor	Throttle position		
Accelerator pedal position sensor	Accelerator pedal position		
Air fuel ratio (A/F) sensor 1	Density of oxygen in exhaust gas (Mixture ratio feedback signal)		
Fuel tank temperature sensor	Fuel temperature in fuel tank		
Combination meter	Vehicle speed*2		

*1: ECM determines the start signal status by the signals of engine speed and battery voltage.

*2: This signal is sent to the ECM though CAN communication line.

This system controls flow rate of fuel vapor from the EVAP canister. The opening of the vapor by-pass passage in the EVAP canister purge volume control solenoid valve changes to control the flow rate. The EVAP canister purge volume control solenoid valve repeats ON/OFF operation according to the signal sent from the ECM. The opening of the valve varies for optimum engine control. The optimum value stored in the ECM is determined by considering various engine conditions. When the engine is operating, the flow rate of fuel vapor from the EVAP canister is regulated as the air flow changes.

COMPONENT DESCRIPTION

The EVAP canister purge volume control solenoid valve uses a ON/OFF duty to control the flow rate of fuel vapor from the EVAP canister. The EVAP canister purge volume control solenoid valve is moved by ON/OFF pulses from the ECM. The longer the ON pulse, the greater the amount of fuel vapor that will flow through the valve.

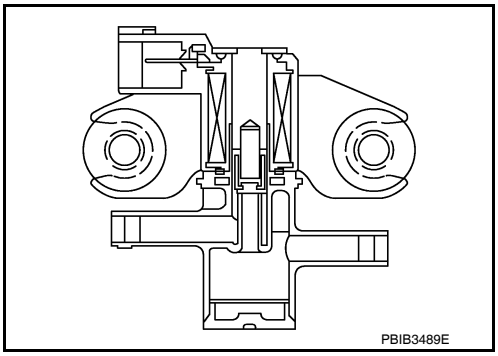

CONSULT-III Reference Value in Data Monitor Mode

INFOID:0000000005286002

Specification data are reference values.

Monitor item	Condition		Specification
PURG VOL C/V	• Engine: After warming up • Selector lever: P or N (CVT), Neutral (M/T) • Air conditioner switch: OFF • No load	Idle (Accelerator pedal: Not depressed even slightly, after engine starting)	0%
		2,000 rpm	20 - 90%

On Board Diagnosis Logic

INFOID:0000000005286003

DTC No.	Trouble diagnosis name	DTC detecting condition		Possible cause
P0443 0443	EVAP canister purge volume control solenoid valve	A	The canister purge flow is detected during the vehicle is stopped while the engine is running, even when EVAP canister purge volume control solenoid valve is completely closed.	• EVAP control system pressure sensor • EVAP canister purge volume control solenoid valve (EVAP canister purge volume control solenoid valve is stuck open.) • EVAP canister vent control valve • Drain filter • EVAP canister • Hoses (Hoses are connected incorrectly or clogged.)
		B	The canister purge flow is detected during the specified driving conditions, even when EVAP canister purge volume control solenoid valve is completely closed.	

DTC Confirmation Procedure

INFOID:0000000005286004

Perform PROCEDURE FOR MALFUNCTION A first.
If the DTC cannot be confirmed, perform PROCEDURE FOR MALFUNCTION B.
NOTE:
If DTC Confirmation Procedure has been previously conducted, always turn ignition switch OFF and wait at least 10 seconds before conducting the next test.

PROCEDURE FOR MALFUNCTION A

TESTING CONDITION:
- Perform “DTC Confirmation Procedure” when the fuel level is between 1/4 and 3/4 full, and vehicle is placed on flat level surface.
- Always perform test at a temperature of 5 to 60°C (41 to 140°F).
- Cool the vehicle so that engine coolant temperature becomes same level as ambient temperature.

With CONSULT-III

1. Turn ignition switch ON and select “DATA MONITOR” mode with CONSULT-III.
2. Check that the following condition are met.
   FUEL T/TMP SE: 0 – 35°C (32 – 95°F)
3. Start engine and wait at least 60 seconds.
4. Check 1st trip DTC.
5. If 1st trip DTC is detected, go to EC-1458, "Diagnosis Procedure".

With GST

1. Turn ignition switch ON.
2. Set voltmeter probes to ECM terminal 95 (FTT sensor signal) and ground.
3. Check that the voltage is 3.1 – 4.2 V.
4. Start engine and wait at least 60 seconds.
5. Check 1st trip DTC.
6. If 1st trip DTC is detected, go to EC-1458, "Diagnosis Procedure".

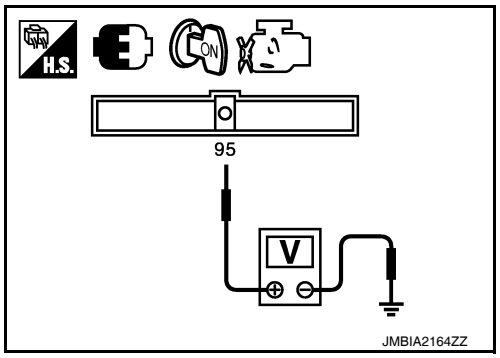

PROCEDURE FOR MALFUNCTION B

NOTE:
If DTC Confirmation Procedure has been previously conducted, always turn ignition switch OFF and wait at least 10 seconds before conducting the next test.
TESTING CONDITION:
Always perform test at a temperature of 5°C (41°F) or more.

With CONSULT-III

1. Start engine and warm it up to normal operating temperature.
2. Turn ignition switch OFF and wait at least 10 seconds.
3. Turn ignition switch ON.
4. Select “PURG VOL CN/V P1444” of “EVAPORATIVE SYSTEM” in “DTC WORK SUPPORT” mode with CONSULT-III.
5. Touch “START”.
6. Start engine and let it idle until “TESTING” on CONSULT-III changes to “COMPLETED”. (It will take approximately 10 seconds.)
   If “TESTING” is not displayed after 5 minutes, retry from step 2.
7. Check that “OK” is displayed after touching “SELF-DIAG RESULTS”. If “NG” is displayed, refer to EC-1458, "Diagnosis Procedure".

With GST

1. Start engine and warm it up to normal operating temperature.
2. Turn ignition switch OFF and wait at least 10 seconds.
3. Start engine and let it idle for at least 20 seconds.
4. Select Service $07 with GST.
5. If 1st trip DTC is detected, go to EC-1458, "Diagnosis Procedure".

Wiring Diagram

INFOID:0000000005286005

EC-MAFS-01

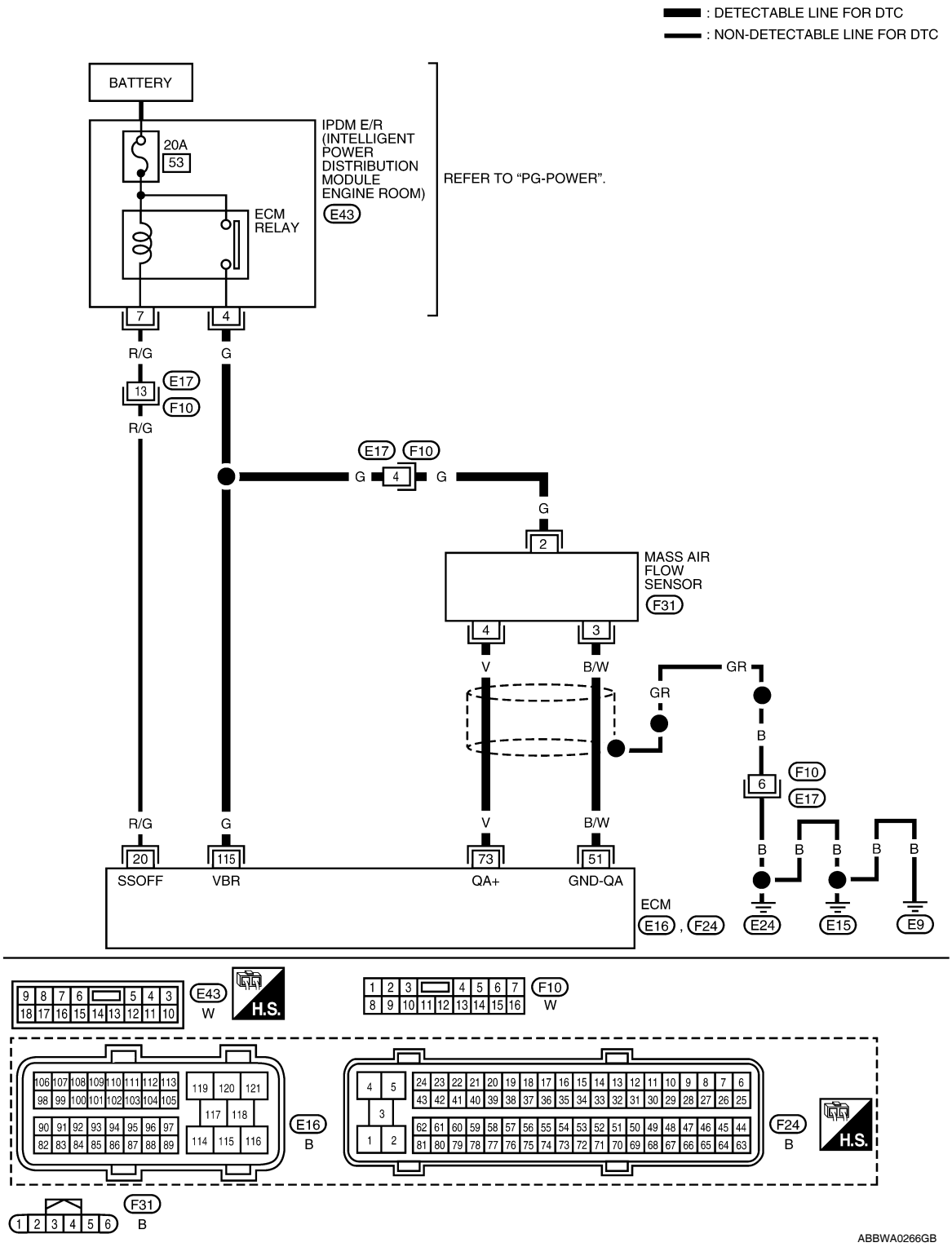

Specification data are reference values and are measured between each terminal and ground.
Pulse signal is measured by CONSULT-III.

CAUTION:

Never use ECM ground terminals when measuring input/output voltage. Doing so may result in damage to the ECM's transistor. Use a ground other than ECM terminals, such as the ground.

TERMINAL NO.	WIRE COLOR	ITEM	CONDITION	DATA (DC Voltage)
24	R/G	ECM relay (Self shut-off)	**[Engine is running]** **[Ignition switch: OFF]** • For a few seconds after turning ignition switch OFF	0 - 1.0 V
			[Ignition switch: OFF] • More than a few seconds after turning ignition switch OFF	BATTERY VOLTAGE (11 - 14 V)
25	W/B	EVAP canister purge volume control solenoid valve	**[Engine is running]** • Idle speed • Accelerator pedal: Not depressed even slightly, after engine starting.	BATTERY VOLTAGE (11 - 14 V)★ 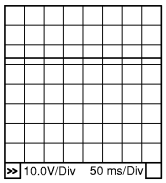 PBIB0050E
			[Engine is running] • Engine speed: Approx. 2,000 rpm (More than 100 seconds after starting engine)	BATTERY VOLTAGE (11 - 14 V)★ 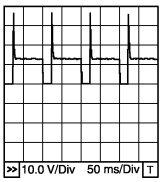 PBIB0520E
105	G	Power supply for ECM	**[Ignition switch: ON]**	BATTERY VOLTAGE (11 - 14 V)

★: Average voltage for pulse signal (Actual pulse signal can be confirmed by oscilloscope.)

Diagnosis Procedure

INFOID:0000000005286006

1. CHECK EVAP CANISTER PURGE VOLUME CONTROL SOLENOID VALVE POWER SUPPLY CIRCUIT

1. Turn ignition switch OFF.
2. Disconnect EVAP canister purge volume control solenoid valve (1) harness connector.
- ⇦: Vehicle front
3. Turn ignition switch ON.

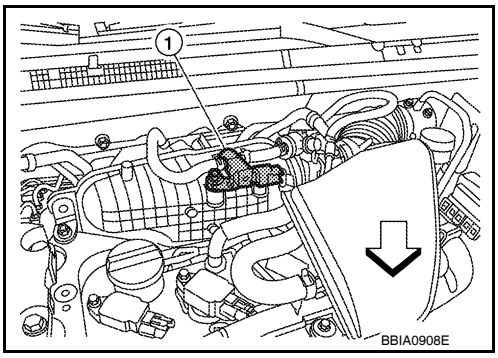

4. Check voltage between EVAP canister purge volume control solenoid valve terminal 1 and ground with CONSULT-III or tester.

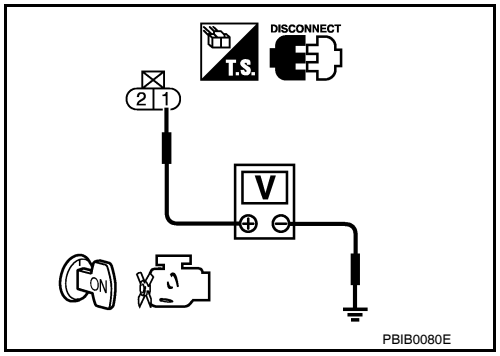

Voltage: Battery voltage

OK or NG

OK >> GO TO 3.
NG >> GO TO 2.

2. DETECT MALFUNCTIONING PART

Check the following.
- Harness connectors E17, F10
- Harness for open or short between EVAP canister purge volume control solenoid valve and IPDM E/R
- Harness for open or short between EVAP canister purge volume control solenoid valve and ECM

>> Repair open circuit or short to ground or short to power in harness or connectors.

3. CHECK EVAP CANISTER PURGE VOLUME CONTROL SOLENOID VALVE OUTPUT SIGNAL CIRCUIT FOR OPEN AND SHORT

1. Turn ignition switch OFF.
2. Disconnect ECM harness connector.
3. Check harness continuity between ECM terminal 25 and EVAP canister purge volume control solenoid valve terminal 2. Refer to Wiring Diagram.

Continuity should exist.

4. Also check harness for short to ground and short to power.

OK or NG

OK >> GO TO 4.
NG >> Repair open circuit or short to ground or short to power in harness or connectors.

4. CHECK EVAP CONTROL SYSTEM PRESSURE SENSOR CONNECTOR

1. Disconnect EVAP control system pressure sensor harness connector.
- This illustration is a view from under vehicle
- EVAP control system pressure sensor (1)
- EVAP canister (2)
- EVAP canister vent control valve (3)
2. Check that water is not inside connectors.

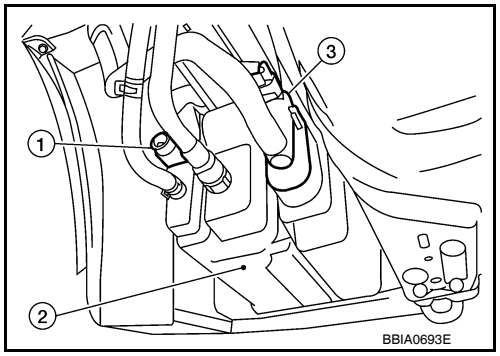

OK or NG

OK >> GO TO 5.
NG >> Replace EVAP control system pressure sensor.

5. CHECK EVAP CONTROL SYSTEM PRESSURE SENSOR

Refer to EC-1488, "Component Inspection".

OK or NG

OK (With CONSULT-III)>>GO TO 6.
OK (Without CONSULT-III)>>GO TO 7.
NG >> Replace EVAP control system pressure sensor.

6. CHECK EVAP CANISTER PURGE VOLUME CONTROL SOLENOID VALVE

With CONSULT-III

1. Turn ignition switch OFF.
2. Reconnect harness connectors disconnected.
3. Start engine.

4. Perform “PURG VOL CONT/V” in “ACTIVE TEST” mode with CONSULT-III. Check that engine speed varies according to the valve opening.

OK or NG

OK >> GO TO 8.
NG >> GO TO 7.

7. CHECK EVAP CANISTER PURGE VOLUME CONTROL SOLENOID VALVE

Refer to EC-1461, "Component Inspection".

OK or NG

OK >> GO TO 8.
NG >> Replace EVAP canister purge volume control solenoid valve.

8. CHECK RUBBER TUBE FOR CLOGGING

1. Disconnect rubber tube connected to EVAP canister vent control valve.
2. Check the rubber tube for clogging.

OK or NG

OK >> GO TO 9.
NG >> Clean the rubber tube using an air blower.

9. CHECK DRAIN FILTER

Refer to EC-1446, "Component Inspection".

OK or NG

OK >> GO TO 10.
NG >> Replace drain filter.

10. CHECK EVAP CANISTER VENT CONTROL VALVE

Refer to EC-1472, "Component Inspection".

OK or NG

OK >> GO TO 11.
NG >> Replace EVAP canister vent control valve.

11. CHECK IF EVAP CANISTER IS SATURATED WITH WATER

1. Remove EVAP canister with EVAP canister vent control valve attached.
2. Does water drain from the EVAP canister?

YES or NO

YES >> GO TO 12.
NO >> GO TO 14.

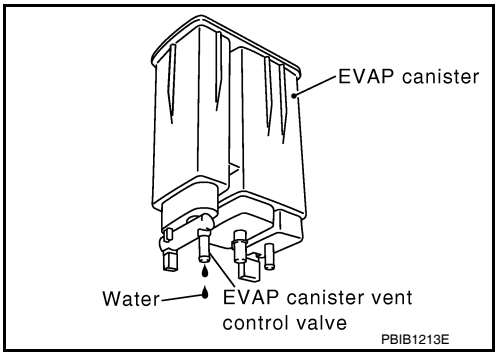

12. CHECK EVAP CANISTER

Weigh the EVAP canister with the EVAP canister vent control valve and EVAP control system pressure sensor attached.

The weight should be less than 1.9 kg (4.2 lb).

OK or NG

OK >> GO TO 14.
NG >> GO TO 13.

13. DETECT MALFUNCTIONING PART

Check the following.
- EVAP canister for damage

- EVAP hose between EVAP canister and vehicle frame for clogging or poor connection

>> Repair hose or replace EVAP canister.

14. CHECK INTERMITTENT INCIDENT

Refer to EC-1245.

>> **INSPECTION END**

Component Inspection

INFOID:0000000005286007

EVAP CANISTER PURGE VOLUME CONTROL SOLENOID VALVE

With CONSULT-III

Check air passage continuity of EVAP canister purge volume control solenoid valve under the following conditions.

Condition (PURG VOL CONT/V value)	Air passage continuity between A and B
100%	Yes
0%	No

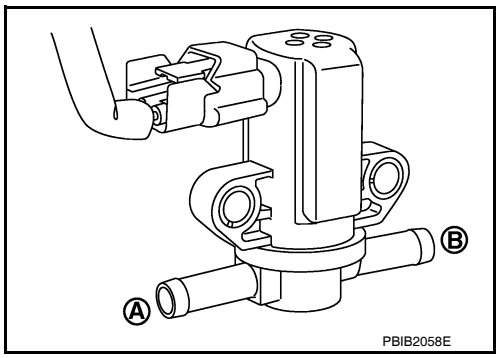

Without CONSULT-III

Check air passage continuity of EVAP canister purge volume control solenoid valve under the following conditions.

Condition	Air passage continuity between A and B
12 V direct current supply between terminals 1 and 2	Yes
No supply	No

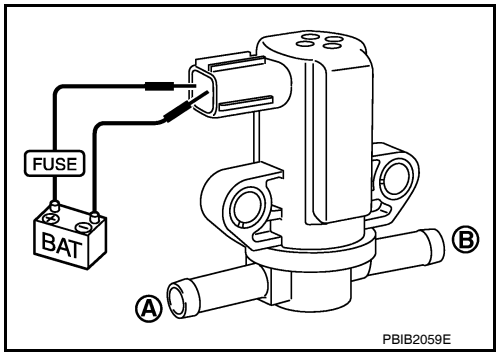

Removal and Installation

INFOID:0000000005286008

EVAP CANISTER PURGE VOLUME CONTROL SOLENOID VALVE

Refer to EM-135.

DTC P0444, P0445 EVAP CANISTER PURGE VOLUME CONTROL SOLENOID VALVE

Description

INFOID:0000000005286009

SYSTEM DESCRIPTION

Sensor	Input Signal to ECM	ECM function	Actuator
Crankshaft position sensor (POS) Camshaft position sensor (PHASE)	Engine speed*1	EVAP canister purge flow control	EVAP canister purge volume control solenoid valve
Mass air flow sensor	Amount of intake air		
Engine coolant temperature sensor	Engine coolant temperature		
Battery	Battery voltage*1		
Throttle position sensor	Throttle position		
Accelerator pedal position sensor	Accelerator pedal position		
Air fuel ratio (A/F) sensor 1	Density of oxygen in exhaust gas (Mixture ratio feedback signal)		
Fuel tank temperature sensor	Fuel temperature in fuel tank		
Combination meter	Vehicle speed*2		

*1: The ECM determines the start signal status by the signal of engine speed and battery voltage.

*2: This signal is sent to the ECM through CAN communication line.

This system controls flow rate of fuel vapor from the EVAP canister. The opening of the vapor by-pass passage in the EVAP canister purge volume control solenoid valve changes to control the flow rate. The EVAP canister purge volume control solenoid valve repeats ON/OFF operation according to the signal sent from the ECM. The opening of the valve varies for optimum engine control. The optimum value stored in the ECM is determined by considering various engine conditions. When the engine is operating, the flow rate of fuel vapor from the EVAP canister is regulated as the air flow changes.

COMPONENT DESCRIPTION

The EVAP canister purge volume control solenoid valve uses a ON/OFF duty to control the flow rate of fuel vapor from the EVAP canister. The EVAP canister purge volume control solenoid valve is moved by ON/OFF pulses from the ECM. The longer the ON pulse, the greater the amount of fuel vapor that will flow through the valve.

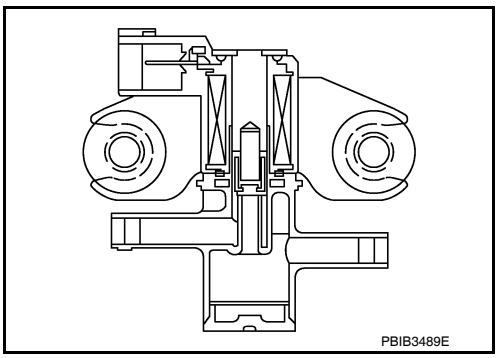

CONSULT-III Reference Value in Data Monitor Mode

INFOID:0000000005286010

Specification data are reference values.

Monitor item	Condition		Specification
PURG VOL C/V	• Engine: After warming up • Selector lever: P or N (CVT), Neutral (M/T) • Air conditioner switch: OFF • No load	Idle (Accelerator pedal: Not depressed even slightly, after engine starting)	0%
		2,000 rpm	20 - 90%

On Board Diagnosis Logic

INFOID:0000000005286011

DTC No.	Trouble diagnosis name	DTC detecting condition	Possible cause
P0444 0444	EVAP canister purge volume control solenoid valve circuit open	An excessively low voltage signal is sent to ECM through the valve	• Harness or connectors (EVAP canister purge volume control solenoid valve circuit is open or shorted.) • EVAP canister purge volume control solenoid valve
P0445 0445	EVAP canister purge volume control solenoid valve circuit shorted	An excessively high voltage signal is sent to ECM through the valve	• Harness or connectors (EVAP canister purge volume control solenoid valve circuit is shorted.) • EVAP canister purge volume control solenoid valve

DTC Confirmation Procedure

INFOID:0000000005286012

NOTE:
If DTC Confirmation Procedure has been previously conducted, always turn ignition switch OFF and wait at least 10 seconds before conducting the next test.
TESTING CONDITION:
Before performing the following procedure, confirm battery voltage is more than 11 V at idle.
1. Start engine and let it idle for at least 13 seconds.
2. Check 1st trip DTC.
3. If 1st trip DTC is detected, go to EC-1465, "Diagnosis Procedure".

Wiring Diagram

INFOID:0000000005286013

EC-MAFS-01

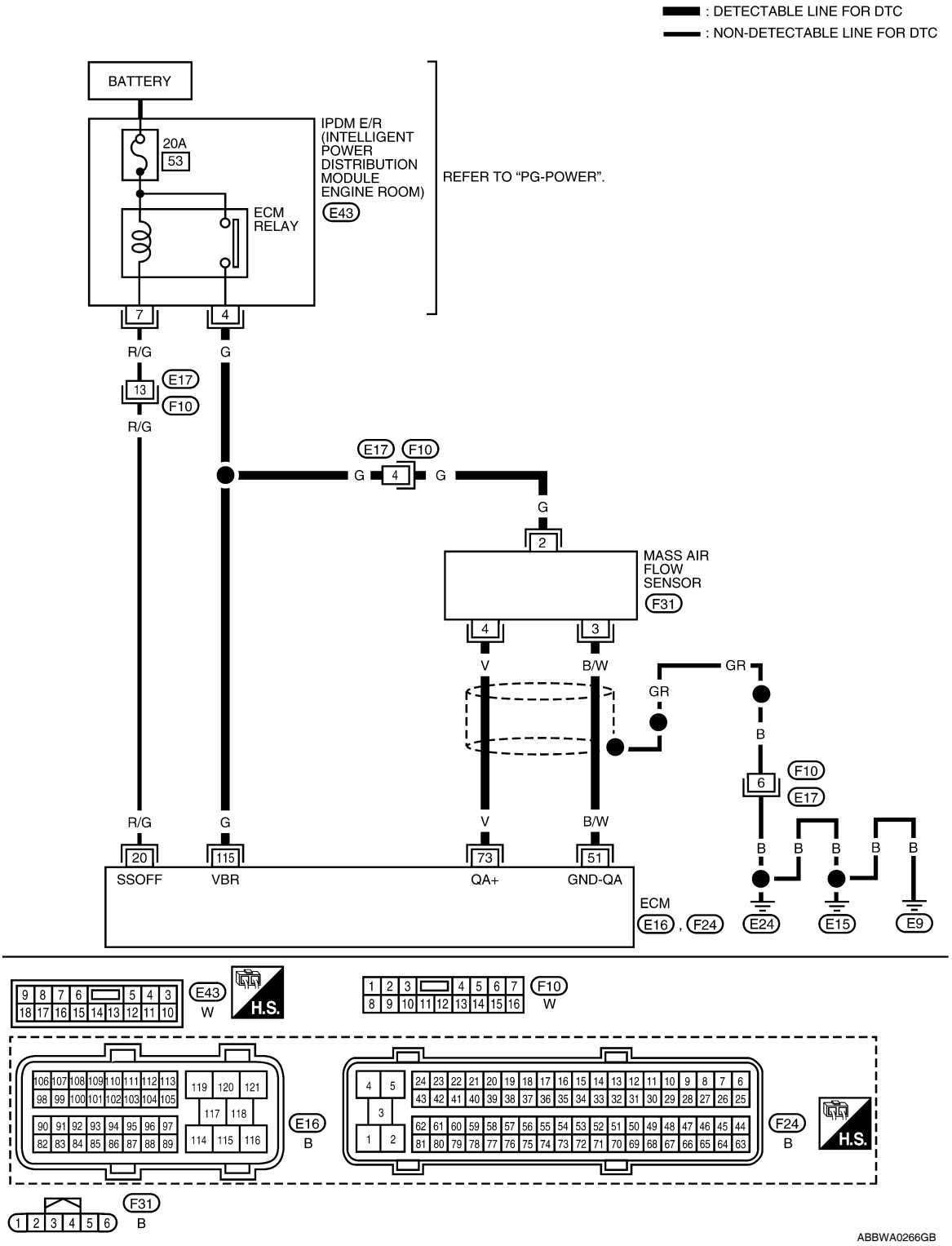

Specification data are reference values and are measured between each terminal and ground.
Pulse signal is measured by CONSULT-III.

CAUTION:

Never use ECM ground terminals when measuring input/output voltage. Doing so may result in damage to the ECM's transistor. Use a ground other than ECM terminals, such as the ground.

TERMINAL NO.	WIRE COLOR	ITEM	CONDITION	DATA (DC Voltage)
24	R/G	ECM relay (Self shut-off)	**[Engine is running]** **[Ignition switch: OFF]** • For a few seconds after turning ignition switch OFF	0 - 1.0 V
			[Ignition switch: OFF] • More than a few seconds after turning ignition switch OFF	BATTERY VOLTAGE (11 - 14 V)
25	W/B	EVAP canister purge volume control solenoid valve	**[Engine is running]** • Idle speed • Accelerator pedal: Not depressed even slightly, after engine starting.	BATTERY VOLTAGE (11 - 14 V)★ 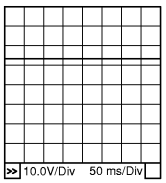 PBIB0050E
			[Engine is running] • Engine speed: Approx. 2,000 rpm (More than 100 seconds after starting engine)	BATTERY VOLTAGE (11 - 14 V)★ 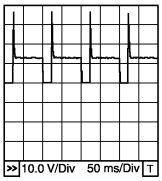 PBIB0520E
105	G	Power supply for ECM	**[Ignition switch: ON]**	BATTERY VOLTAGE (11 - 14 V)

★: Average voltage for pulse signal (Actual pulse signal can be confirmed by oscilloscope.)

Diagnosis Procedure

INFOID:0000000005286014

1. CHECK EVAP CANISTER PURGE VOLUME CONTROL SOLENOID VALVE POWER SUPPLY CIRCUIT

1. Turn ignition switch OFF.
2. Disconnect EVAP canister purge volume control solenoid valve (1) harness connector.
- ⇦: Vehicle front
3. Turn ignition switch ON.

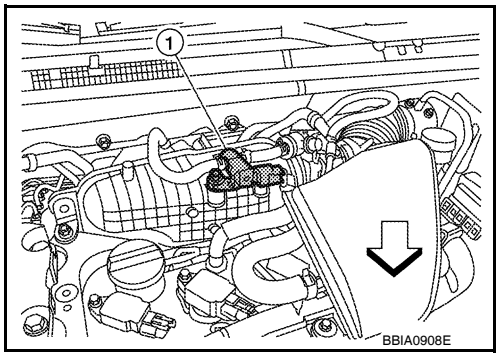

4. Check voltage between EVAP canister purge volume control solenoid valve terminal 1 and ground with CONSULT-III or tester.

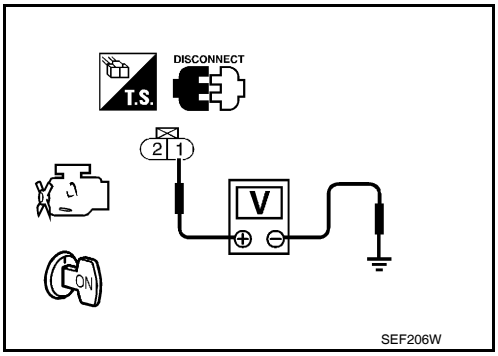

Voltage: Battery voltage

OK or NG

OK >> GO TO 3.
NG >> GO TO 2.

2. DETECT MALFUNCTIONING PART

Check the following.
- Harness connectors E17, F10
- Harness for open or short between EVAP canister purge volume control solenoid valve and IPDM E/R
- Harness for open or short between EVAP canister purge volume control solenoid valve and ECM

>> Repair open circuit or short to ground or short to power in harness or connectors.

3. CHECK EVAP CANISTER PURGE VOLUME CONTROL SOLENOID VALVE OUTPUT SIGNAL CIRCUIT FOR OPEN AND SHORT

1. Turn ignition switch OFF.
2. Disconnect ECM harness connector.
3. Check harness continuity between ECM terminal 25 and EVAP canister purge volume control solenoid valve terminal 2. Refer to Wiring Diagram.

Continuity should exist.

4. Also check harness for short to ground and short to power.

OK or NG

OK (With CONSULT-III)>>GO TO 4.
OK (Without CONSULT-III)>>GO TO 5.
NG >> Repair open circuit or short to ground or short to power in harness or connectors.

4. CHECK EVAP CANISTER PURGE VOLUME CONTROL SOLENOID VALVE OPERATION

With CONSULT-III

1. Reconnect all harness connectors disconnected.
2. Start engine.
3. Perform “PURG VOL CONT/V” in “ACTIVE TEST” mode with CONSULT-III. Check that engine speed varies according to the valve opening.

OK or NG

OK >> GO TO 6.
NG >> GO TO 5.

5. CHECK EVAP CANISTER PURGE VOLUME CONTROL SOLENOID VALVE

Refer to EC-1467, "Component Inspection".

OK or NG

OK >> GO TO 6.
NG >> Replace EVAP canister purge volume control solenoid valve.

6. CHECK INTERMITTENT INCIDENT

Refer to EC-1245.

>> **INSPECTION END**

Component Inspection

INFOID:0000000005286015

EVAP CANISTER PURGE VOLUME CONTROL SOLENOID VALVE

With CONSULT-III

Check air passage continuity of EVAP canister purge volume control solenoid valve under the following conditions.

Condition (PURG VOL CONT/V value)	Air passage continuity between A and B
100%	Yes
0%	No

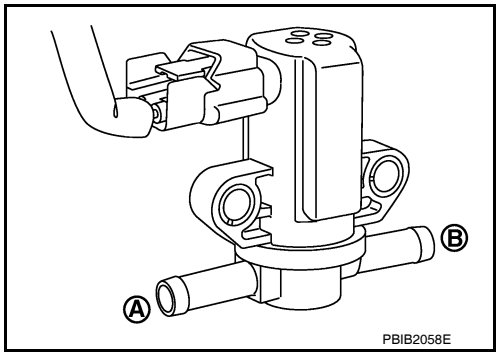

Without CONSULT-III

Check air passage continuity of EVAP canister purge volume control solenoid valve under the following conditions.

Condition	Air passage continuity between A and B
12 V direct current supply between terminals 1 and 2	Yes
No supply	No

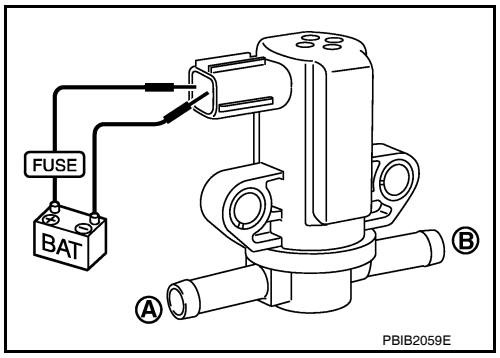

Removal and Installation

INFOID:0000000005286016

EVAP CANISTER PURGE VOLUME CONTROL SOLENOID VALVE

Refer to EM-135.

DTC P0447 EVAP CANISTER VENT CONTROL VALVE

Component Description

INFOID:0000000005286017

The EVAP canister vent control valve (3) is located on the EVAP canister (2) and is used to seal the canister vent.
This solenoid valve responds to signals from the ECM. When the ECM sends an ON signal, the coil in the solenoid valve is energized. A plunger will then move to seal the canister vent. The ability to seal the vent is necessary for the on board diagnosis of other evaporative emission control system components.
This solenoid valve is used only for diagnosis, and usually remains opened.
When the vent is closed, under normal purge conditions, the evaporative emission control system is depressurized and allows EVAP control system diagnoses.
- This illustration is a view from under vehicle
- EVAP control system pressure sensor (1)

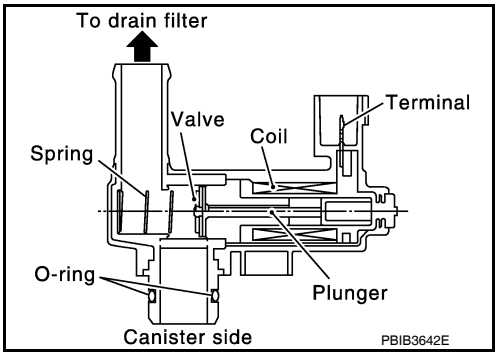

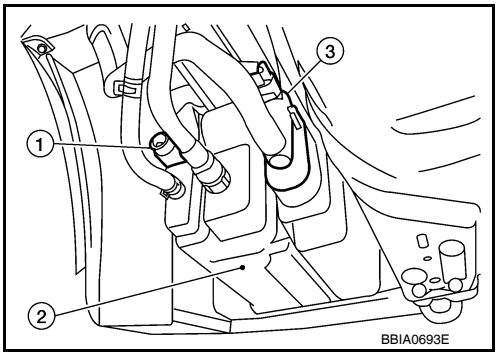

CONSULT-III Reference Value in Data Monitor Mode

INFOID:0000000005286018

Specification data are reference values.

Monitor item	Condition	Specification
VENT CONT/V	• Ignition switch: ON	OFF

On Board Diagnosis Logic

INFOID:0000000005286019

DTC No.	Trouble diagnosis name	DTC detecting condition	Possible cause
P0447 0447	EVAP canister vent control valve circuit open	An improper voltage signal is sent to ECM through EVAP canister vent control valve.	• Harness or connectors (EVAP canister vent control valve circuit is open or shorted.) • EVAP canister vent control valve • Drain filter

DTC Confirmation Procedure

INFOID:0000000005286020

NOTE:
If DTC Confirmation Procedure has been previously conducted, always turn ignition switch OFF and wait at least 10 seconds before conducting the next test.
TESTING CONDITION:
Before performing the following procedure, confirm battery voltage is more than 11 V at idle.
1. Start engine and wait at least 8 seconds.
2. Check 1st trip DTC.
3. If 1st trip DTC is detected, go to EC-1470, "Diagnosis Procedure".

Wiring Diagram

INFOID:0000000005286021

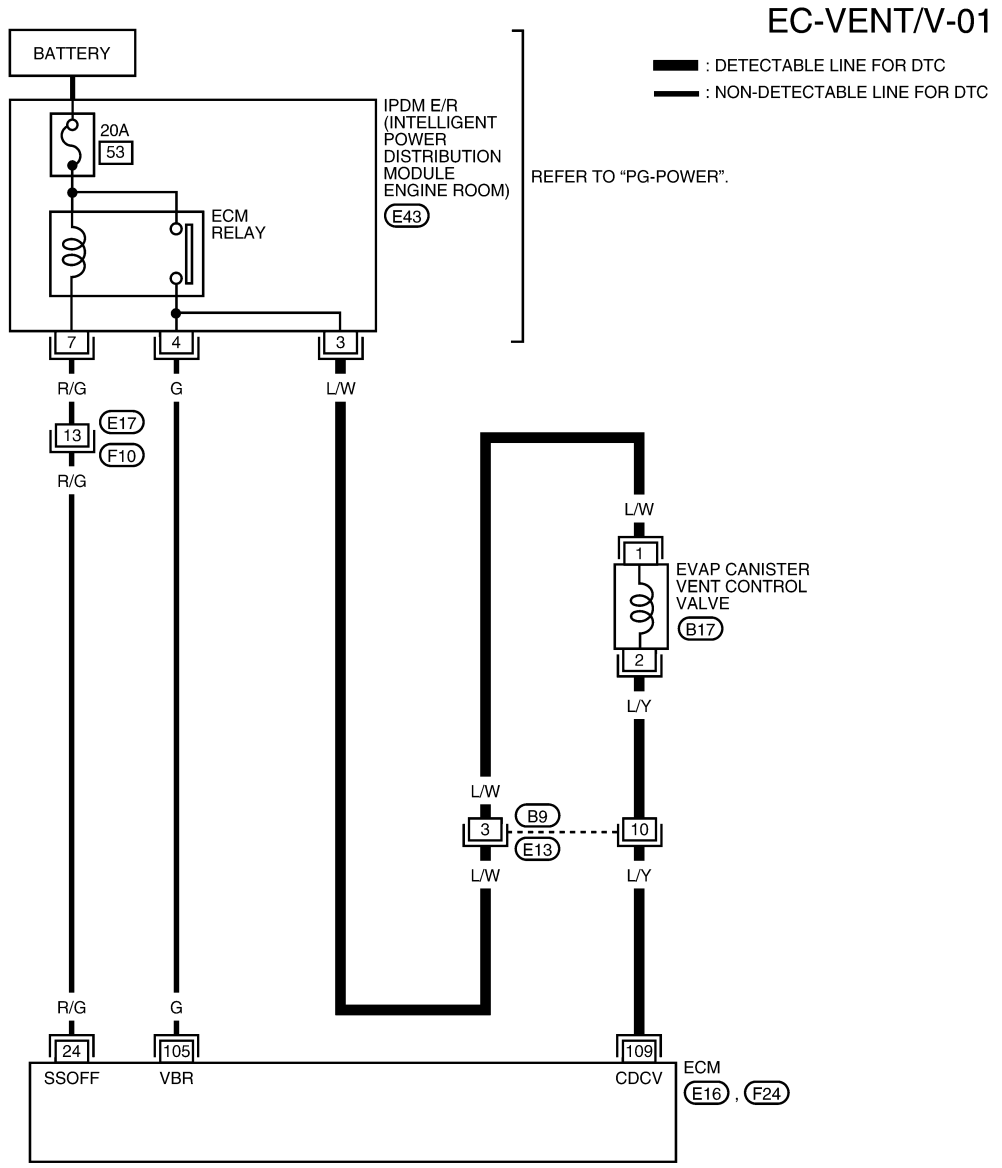

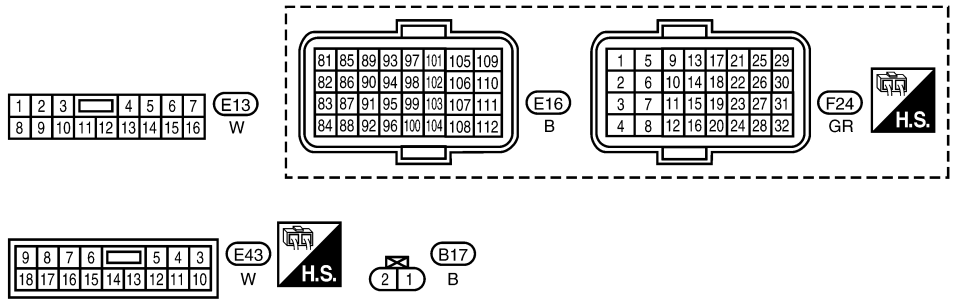

AABWA0267GB

Specification data are reference values and are measured between each terminal and ground.

CAUTION:

Never use ECM ground terminals when measuring input/output voltage. Doing so may result in damage to the ECM's transistor. Use a ground other than ECM terminals, such as the ground.

TERMINAL NO.	WIRE COLOR	ITEM	CONDITION	DATA (DC Voltage)
24	R/G	ECM relay (Self shut-off)	**[Engine is running]** **[Ignition switch: OFF]** • For a few seconds after turning ignition switch OFF	0 - 1.0 V
			[Ignition switch: OFF] • More than a few seconds after turning ignition switch OFF	BATTERY VOLTAGE (11 - 14 V)
105	G	Power supply for ECM	**[Ignition switch: ON]**	BATTERY VOLTAGE (11 - 14 V)
109	L/Y	EVAP canister vent control valve	**[Ignition switch: ON]**	BATTERY VOLTAGE (11 - 14 V)

Diagnosis Procedure

INFOID:0000000005286022

1. INSPECTION START

1. Do you have CONSULT-III?

Yes or No

Yes >> GO TO 2.
No >> GO TO 3.

2. CHECK EVAP CANISTER VENT CONTROL VALVE CIRCUIT

With CONSULT-III

1. Turn ignition switch OFF and then turn ON.
2. Select “VENT CONTROL/V” in “ACTIVE TEST” mode with CONSULT-III.
3. Touch “ON/OFF” on CONSULT-III screen.
4. Check for operating sound of the valve.

Clicking noise should be heard.

OK or NG

OK >> GO TO 8.
NG >> GO TO 3.

3. CHECK EVAP CANISTER VENT CONTROL VALVE POWER SUPPLY CIRCUIT

1. Turn ignition switch OFF.
2. Disconnect EVAP canister vent control valve (3) harness connector.
- This illustration is a view from under vehicle
- EVAP control system pressure sensor (1)
- EVAP canister (2)
3. Turn ignition switch ON.

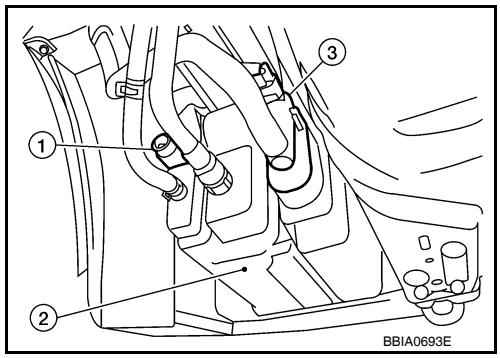

4. Check voltage between EVAP canister vent control valve terminal 1 and ground with CONSULT-III or tester.

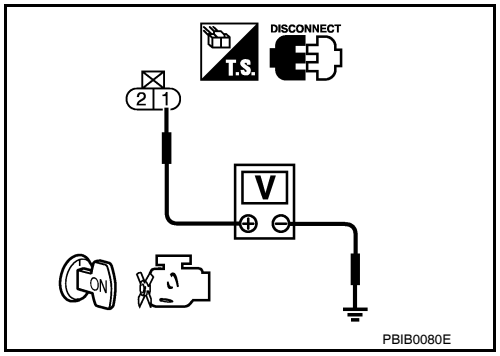

Voltage: Battery voltage

OK or NG

OK >> GO TO 5.
NG >> GO TO 4.

4. DETECT MALFUNCTIONING PART

Check the following.
- Harness connectors B9, E13
- Harness for open or short between EVAP canister vent control valve and IPDM E/R

>> Repair open circuit or short to ground or short to power in harness or connectors.

5. CHECK EVAP CANISTER VENT CONTROL VALVE OUTPUT SIGNAL CIRCUIT FOR OPEN AND SHORT

1. Turn ignition switch OFF.
2. Disconnect ECM harness connector.
3. Check harness continuity between ECM terminal 109 and EVAP canister vent control valve terminal 2. Refer to Wiring Diagram.

Continuity should exist.

4. Also check harness for short to ground and short to power.

OK or NG

OK >> GO TO 6.
NG >> Repair open circuit or short to ground or short to power in harness or connectors.

6. CHECK RUBBER TUBE FOR CLOGGING

1. Disconnect rubber tube connected to EVAP canister vent control valve.
2. Check the rubber tube for clogging.

OK or NG

OK >> GO TO 7.
NG >> Clean the rubber tube using an air blower.

7. CHECK DRAIN FILTER

Refer to EC-1446, "Component Inspection".

OK or NG

OK >> GO TO 8.
NG >> Replace drain filter.

8. CHECK EVAP CANISTER VENT CONTROL VALVE

Refer to EC-1472, "Component Inspection".

OK or NG

OK >> GO TO 9.
NG >> Replace EVAP canister vent control valve.

9. CHECK INTERMITTENT INCIDENT

Refer to EC-1245.

>> **INSPECTION END**

Component Inspection

INFOID:0000000005286023

EVAP CANISTER VENT CONTROL VALVE

With CONSULT-III

1. Remove EVAP canister vent control valve from EVAP canister.
2. Check portion **B** of EVAP canister vent control valve for being rusted.
   If NG, replace EVAP canister vent control valve.
   If OK, go to next step.
3. Reconnect harness connectors disconnected.
4. Turn ignition switch ON.
5. Perform “VENT CONTROL/V” in “ACTIVE TEST” mode.
6. Check air passage continuity and operation delay time.
   Check that new O-ring is installed properly.

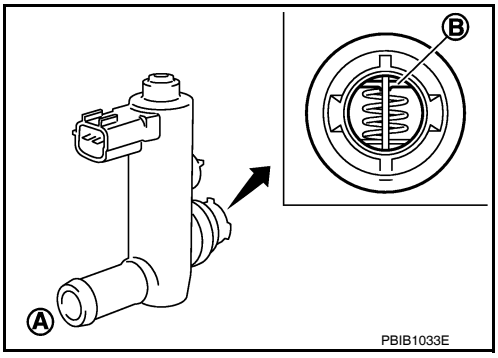

Condition VENT CONTROL/V	Air passage continuity between A and B
ON	No
OFF	Yes

Operation takes less than 1 second.
If NG, replace EVAP canister vent control valve.
If OK, go to next step.

7. Clean the air passage (Portion **A** to **B)** of EVAP canister vent control valve using an air blower.
8. Perform step 6 again.

Without CONSULT-III

1. Remove EVAP canister vent control valve from EVAP canister.
2. Check portion **B** of EVAP canister vent control valve for being rusted.

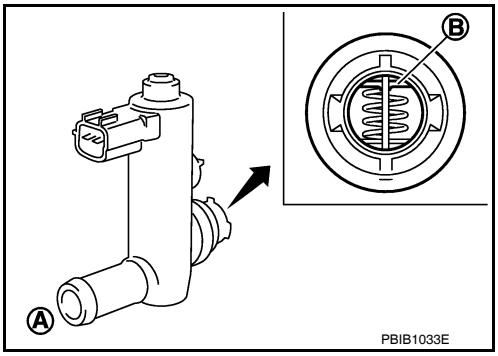

3. Check air passage continuity and operation delay time under the following conditions.
   Check that new O-ring is installed properly.

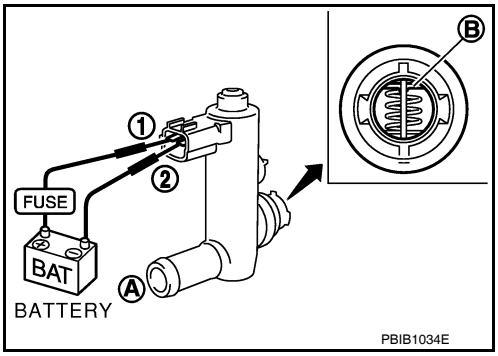

Condition	Air passage continuity between A and B
12 V direct current supply between terminals 1 and 2	No
OFF	Yes

Operation takes less than 1 second.
If NG, replace EVAP canister vent control valve.
If OK, go to next step.

4. Clean the air passage (Portion **A** to **B**) of EVAP canister vent control valve using an air blower.
5. Perform step 3 again.

DTC P0448 EVAP CANISTER VENT CONTROL VALVE

Component Description

INFOID:0000000005286024

The EVAP canister vent control valve (3) is located on the EVAP canister (2) and is used to seal the canister vent.
This solenoid valve responds to signals from the ECM. When the ECM sends an ON signal, the coil in the solenoid valve is energized. A plunger will then move to seal the canister vent. The ability to seal the vent is necessary for the on board diagnosis of other evaporative emission control system components.
This solenoid valve is used only for diagnosis, and usually remains opened.
When the vent is closed, under normal purge conditions, the evaporative emission control system is depressurized and allows EVAP control system diagnoses.
- This illustration is a view from under vehicle
- EVAP control system pressure sensor (1)

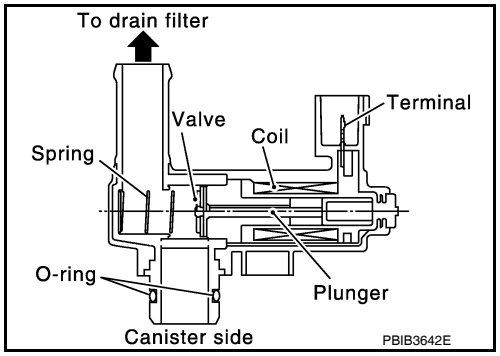

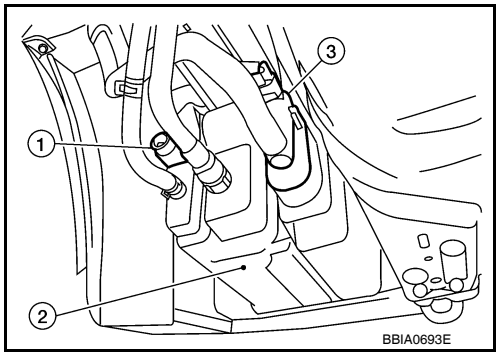

CONSULT-III Reference Value in Data Monitor Mode

INFOID:0000000005286025

Specification data are reference values.

Monitor item	Condition	Specification
VENT CONT/V	• Ignition switch: ON	OFF

On Board Diagnosis Logic

INFOID:0000000005286026

DTC No.	Trouble diagnosis name	DTC detecting condition	Possible cause
P0448 0448	EVAP canister vent control valve close	EVAP canister vent control valve remains closed under specified driving conditions.	• EVAP canister vent control valve • EVAP control system pressure sensor and the circuit • Blocked rubber tube to EVAP canister vent control valve • Drain filter • EVAP canister is saturated with water

DTC Confirmation Procedure

INFOID:0000000005286027

CAUTION:
Always drive vehicle at a safe speed.
NOTE:
If DTC Confirmation Procedure has been previously conducted, always turn ignition switch OFF and wait at least 10 seconds before conducting the next test.

WITH CONSULT-III

1. Turn ignition switch ON and wait at least 5 seconds.
2. Turn ignition switch OFF and wait at least 10 seconds.
3. Turn ignition switch ON and select “DATA MONITOR” mode with CONSULT-III.

4. Start engine and let it idle for at least 1 minute.
5. Repeat next procedures three times.

a. Increase the engine speed up to between 3,000 to 3,500 rpm and maintain that speed for 2 minutes and 50 seconds to 3 minutes.
Never exceed 3 minutes.

b. Fully released accelerator pedal and keep engine idle for approximately 5 seconds.

6. Check 1st trip DTC.
7. If 1st trip DTC is detected, go to EC-1476, "Diagnosis Procedure".
If 1st trip DTC is not detected, go to the next step.
8. Repeat next procedure 20 times.

a. Quickly increase the engine speed up to between 4,000 to 4,500 rpm and maintain that speed for 25 to 30 seconds.

b. Fully released accelerator pedal and keep engine idle for at least 35 seconds.

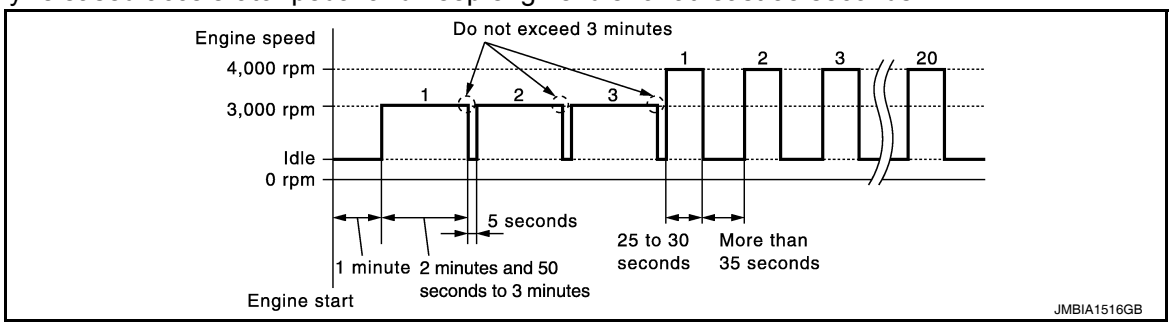

9. Check 1st trip DTC.
10. If 1st trip DTC is detected, go to EC-1476, "Diagnosis Procedure".

WITH GST

Follow the procedure “WITH CONSULT-III” above.

Wiring Diagram

INFOID:0000000005286028

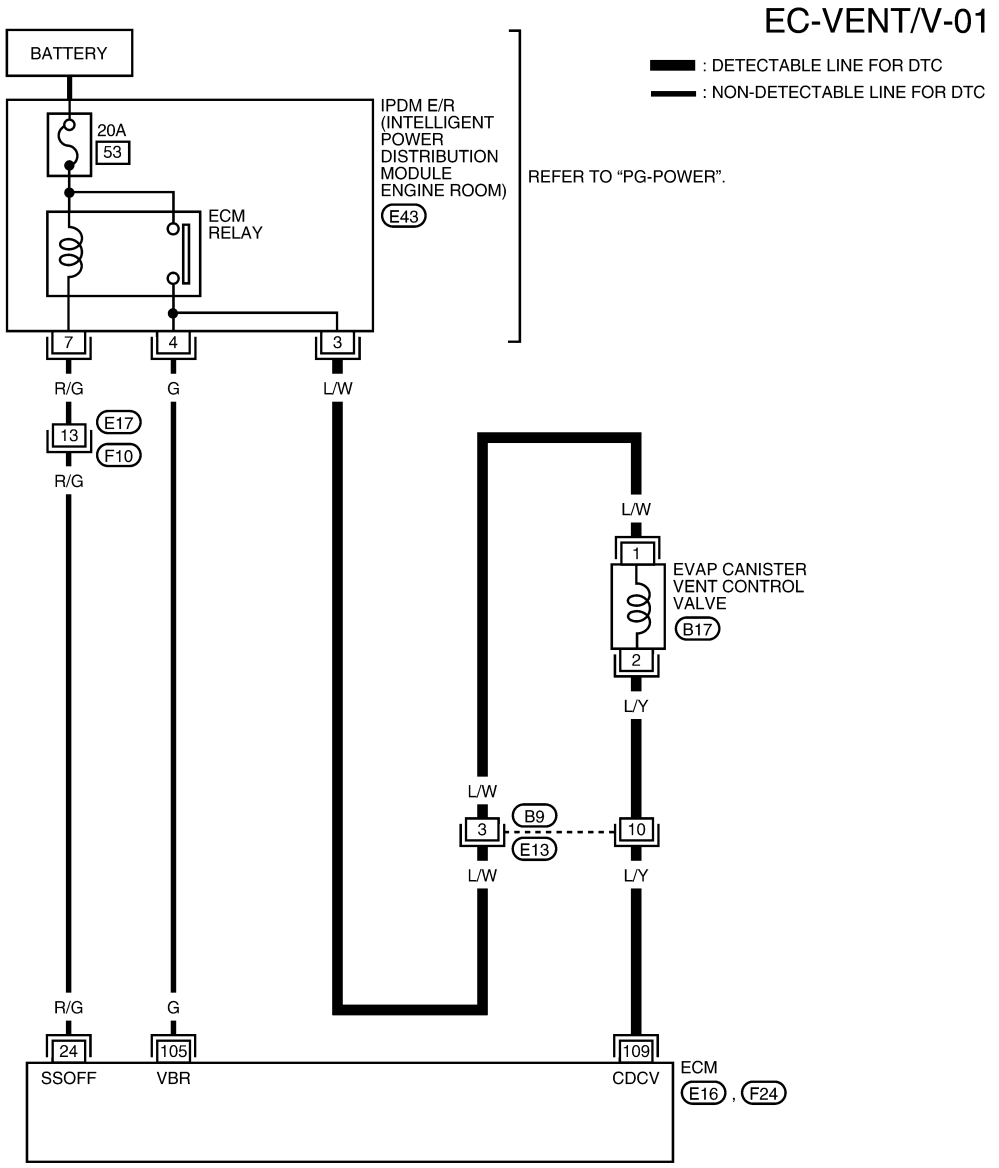

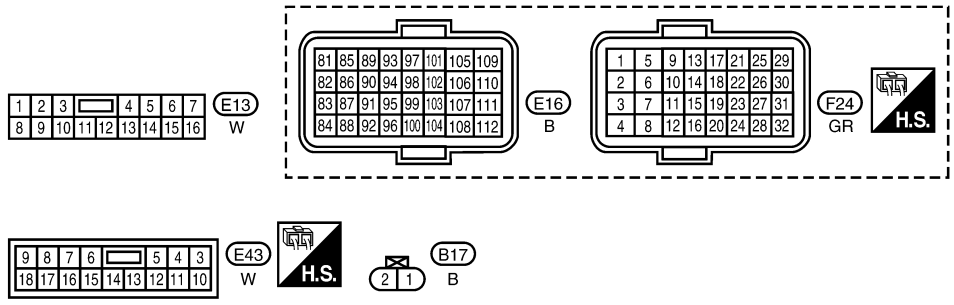

AABWA0267GB

Specification data are reference values and are measured between each terminal and ground.

CAUTION:

Never use ECM ground terminals when measuring input/output voltage. Doing so may result in damage to the ECM's transistor. Use a ground other than ECM terminals, such as the ground.

TERMINAL NO.	WIRE COLOR	ITEM	CONDITION	DATA (DC Voltage)
24	R/G	ECM relay (Self shut-off)	**[Engine is running]** **[Ignition switch: OFF]** • For a few seconds after turning ignition switch OFF	0 - 1.0 V
			[Ignition switch: OFF] • More than a few seconds after turning ignition switch OFF	BATTERY VOLTAGE (11 - 14 V)
105	G	Power supply for ECM	**[Ignition switch: ON]**	BATTERY VOLTAGE (11 - 14 V)
109	L/Y	EVAP canister vent control valve	**[Ignition switch: ON]**	BATTERY VOLTAGE (11 - 14 V)

Diagnosis Procedure

INFOID:0000000005286029

1. CHECK RUBBER TUBE

1. Turn ignition switch OFF.
2. Disconnect rubber tube connected to EVAP canister vent control valve (3).
3. Check the rubber tube for clogging.

- This illustration is a view from under vehicle
- EVAP control system pressure sensor (1)
- EVAP canister (2)

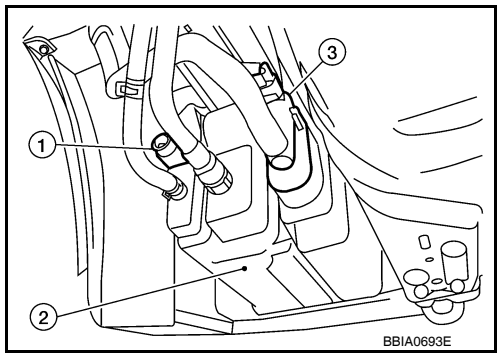

OK or NG

OK >> GO TO 2.
NG >> Clean rubber tube using an air blower.

2. CHECK DRAIN FILTER

Refer to EC-1446, "Component Inspection".

OK or NG

OK >> GO TO 3.
NG >> Replace drain filter.

3. CHECK EVAP CANISTER VENT CONTROL VALVE

Refer to EC-1477, "Component Inspection".

OK or NG

OK >> GO TO 4.
NG >> Replace EVAP canister vent control valve.

4. CHECK IF EVAP CANISTER SATURATED WITH WATER

1. Remove EVAP canister with EVAP canister vent control valve attached.
2. Does water drain from the EVAP canister?

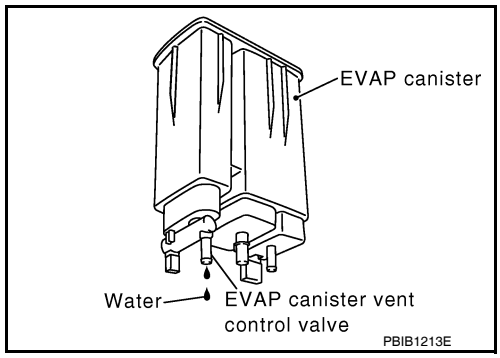

Yes >> GO TO 5.
No >> GO TO 7.

5. CHECK EVAP CANISTER

Weigh the EVAP canister with the EVAP canister vent control valve and EVAP control system pressure sensor attached.

The weight should be less than 1.9 kg (4.2 lb).

OK or NG

OK >> GO TO 7.
NG >> GO TO 6.

6. DETECT MALFUNCTIONING PART

Check the following.
- EVAP canister for damage
- EVAP hose between EVAP canister and vehicle frame for clogging or poor connection

>> Repair hose or replace EVAP canister.

7. CHECK EVAP CONTROL SYSTEM PRESSURE SENSOR CONNECTOR

1. Disconnect EVAP control system pressure sensor (1) harness connector.
- This illustration is a view from under vehicle
- EVAP canister (2)
- EVAP canister vent control valve (3)
2. Check that water is not inside connectors.

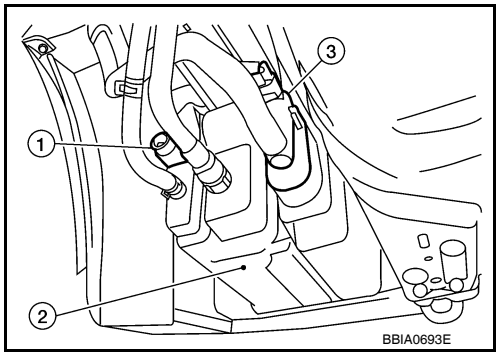

OK or NG

OK >> GO TO 8.
NG >> Replace EVAP control system pressure sensor.

8. CHECK EVAP CONTROL SYSTEM PRESSURE SENSOR

Refer to EC-1496, "Component Inspection".

OK or NG

OK >> GO TO 9.
NG >> Replace EVAP control system pressure sensor.

9. CHECK INTERMITTENT INCIDENT

Refer to EC-1245.

>> **INSPECTION END**

Component Inspection

INFOID:0000000005286030

EVAP CANISTER VENT CONTROL VALVE

With CONSULT-III

1. Remove EVAP canister vent control valve from EVAP canister.
2. Check portion **B** of EVAP canister vent control valve for being rusted.
   If NG, replace EVAP canister vent control valve.
   If OK, go to next step.
3. Reconnect harness connectors disconnected.
4. Turn ignition switch ON.
5. Perform “VENT CONTROL/V” in “ACTIVE TEST” mode.
6. Check air passage continuity and operation delay time.
   Check that new O-ring is installed properly.

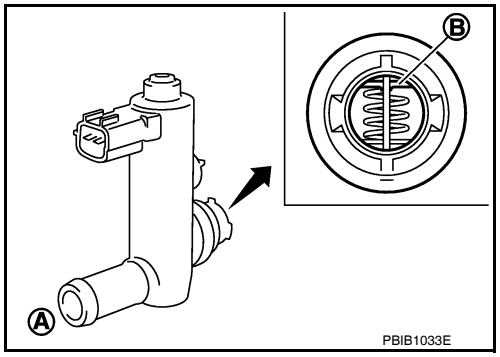

Condition (VENT CONT/V)	Air passage continuity between A and B
ON	No
OFF	Yes

Operation takes less than 1 second.
If NG, go to next step.

7. Clean the air passage (Portion **A** to **B**) of EVAP canister vent control valve using an air blower.
8. Perform step 6 again.
   If NG, replace EVAP canister vent control valve.

Without CONSULT-III

1. Remove EVAP canister vent control valve from EVAP canister.
2. Check portion **B** of EVAP canister vent control valve for being rusted.

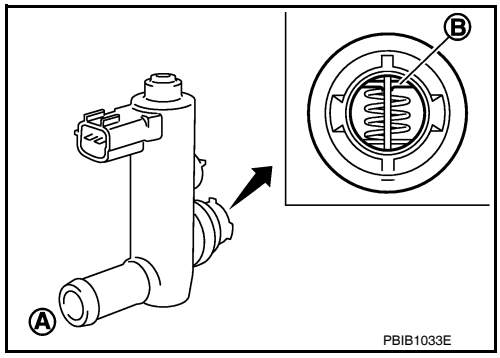

3. Check air passage continuity and operation delay time under the following conditions.
   Check that new O-ring is installed properly.

Condition	Air passage continuity between A and B
12 V direct current supply between terminals 1 and 2	No
OFF	Yes

Operation takes less than 1 second.
If NG, go to next step.

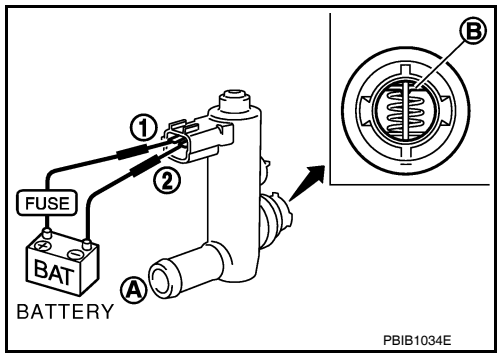

4. Clean the air passage (Portion **A** to **B**) of EVAP canister vent control valve using an air blower.
5. Perform step 3 again.
   If NG, replace EVAP canister vent control valve.

DTC P0451 EVAP CONTROL SYSTEM PRESSURE SENSOR

Component Description

INFOID:0000000005286031

The EVAP control system pressure sensor (1) detects pressure in the purge line. The sensor output voltage to the ECM increases as pressure increases.

- This illustration is a view from under vehicle
- EVAP canister (2)
- EVAP canister vent control valve (3)

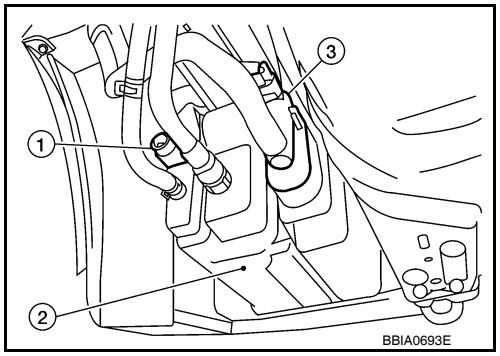

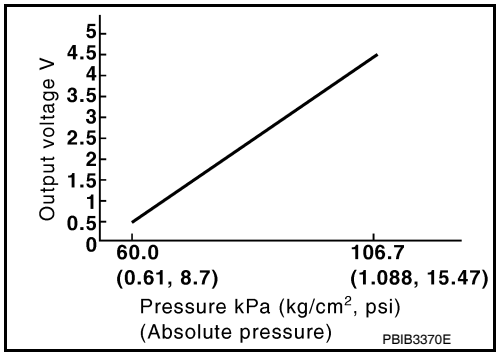

CONSULT-III Reference Value in Data Monitor Mode

INFOID:0000000005286032

Specification data are reference values.

Monitor item	Condition	Specification
EVAP SYS PRES	• Ignition switch: ON	1.8 - 4.8 V

On Board Diagnosis Logic

INFOID:0000000005286033

DTC No.	Trouble diagnosis name	DTC detecting condition	Possible cause
P0451 0451	EVAP control system pressure sensor performance	ECM detects a sloshing signal from the EVAP control system pressure sensor	• Harness or connectors [Crankshaft position sensor (POS) circuit is shorted.] (Accelerator pedal position sensor circuit is shorted.) (Refrigerant pressure sensor circuit is shorted.) • EVAP control system pressure sensor • Crankshaft position sensor (POS) • Accelerator pedal position sensor • Refrigerant pressure sensor

DTC Confirmation Procedure

INFOID:0000000005286034

NOTE:
If DTC Confirmation Procedure has been previously conducted, always turn ignition switch OFF and wait at least 10 seconds before conducting the next test.

1. Start engine and wait at least 40 seconds.
   NOTE:
   Do not depress accelerator pedal even slightly.

2. Check 1st trip DTC.
3. If 1st trip DTC is detected, go to EC-1480, "Diagnosis Procedure".

Diagnosis Procedure

INFOID:0000000005286035

1. CHECK GROUND CONNECTIONS

1. Turn ignition switch OFF.
2. Loosen and retighten ground screws on the body.
   Refer to EC-1251, "Ground Inspection".

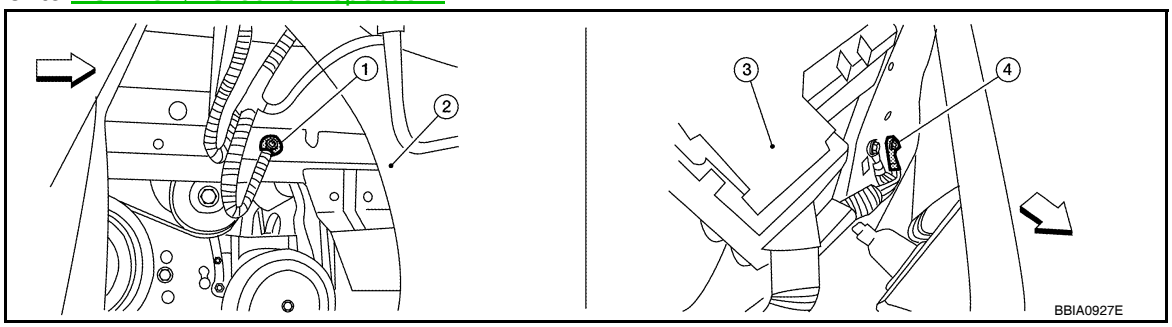

⇦: Vehicle front

1. Body ground E9 (view with front wheel RH and fender protector RH removed.)
2. Washer tank
3. Fuse and fusible link box
4. Body ground E15

OK or NG

OK >> GO TO 2.
NG >> Repair or replace ground connections.

2. CHECK EVAP CONTROL SYSTEM PRESSURE SENSOR CONNECTOR FOR WATER

1. Disconnect EVAP control system pressure sensor (1) harness connector.
- This illustration is a view from under vehicle
- EVAP canister (2)
- EVAP canister vent control valve (3)
2. Check that water is not inside connectors.

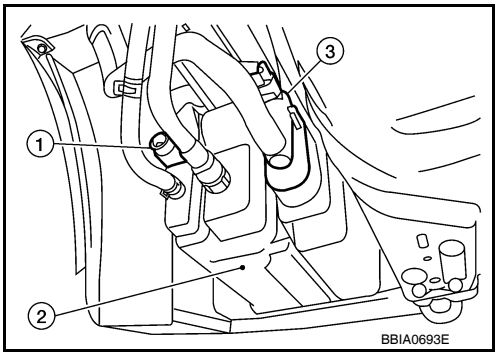

OK or NG

OK >> GO TO 3.
NG >> Repair or replace harness connector.

3. CHECK POWER SUPPLY CIRCUITS

Check harness for short to power and short to ground, between the following terminals.

ECM terminal	Sensor terminal	Reference Wiring Diagram
72	Refrigerant pressure sensor terminal 3	EC-1667, "Wiring Diagram"
76	Crankshaft position sensor (POS) terminal 1	EC-1426, "Wiring Diagram"
87	APP sensor terminal 5	EC-1608, "Wiring Diagram"
91	EVAP control system pressure sensor terminal 3	EC-1484, "Wiring Diagram"

OK or NG

OK >> GO TO 4.
NG >> Repair short to ground or short to power in harness or connectors.

4. CHECK REFRIGERANT PRESSURE SENSOR

Refer to MTC-27.

OK or NG

OK >> GO TO 5.
NG >> Replace refrigerant pressure sensor.

5. CHECK CRANKSHAFT POSITION SENSOR (POS)

Refer to EC-1488, "Component Inspection".

OK or NG

OK >> GO TO 6.
NG >> Replace crankshaft position sensor (POS).

6. CHECK APP SENSOR

Refer to EC-1611, "Component Inspection".

OK or NG

OK >> GO TO 8.
NG >> GO TO 7.

7. REPLACE ACCELERATOR PEDAL ASSEMBLY

1. Replace accelerator pedal assembly.
2. Perform EC-1193, "Accelerator Pedal Released Position Learning".
3. Perform EC-1193, "Throttle Valve Closed Position Learning".
4. Perform EC-1193, "Idle Air Volume Learning".

>> **INSPECTION END**

8. CHECK EVAP CONTROL SYSTEM PRESSURE SENSOR

Refer to EC-1481, "Component Inspection".

OK or NG

OK >> GO TO 9.
NG >> Replace EVAP control system pressure sensor.

9. CHECK INTERMITTENT INCIDENT

Refer to EC-1245.
For wiring diagram, refer to EC-1484, "Wiring Diagram".

>> **INSPECTION END**

Component Inspection

INFOID:0000000005286036

EVAP CONTROL SYSTEM PRESSURE SENSOR

1. Remove EVAP control system pressure sensor with its harness connector connected from EVAP canister. **Always replace O-ring with a new one.**
2. Install a vacuum pump to EVAP control system pressure sensor.
3. Turn ignition switch ON and check output voltage between ECM terminal 42 (EVAP control system pressure sensor signal) and ground under the following conditions.

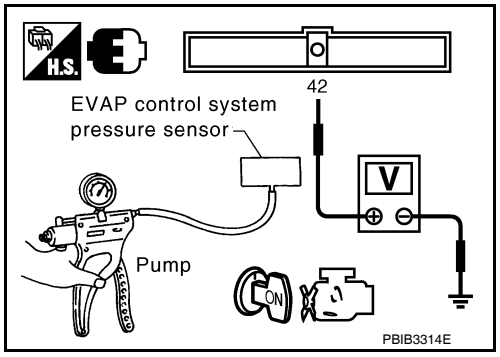

Applied vacuum kPa (kg/cm^2, psi)	Voltage (V)
Not applied	1.8 - 4.8
-26.7 (-0.272, -3.87)	2.1 to 2.5 V lower than above value

CAUTION:
- **Always calibrate the vacuum pump gauge when using it.**
- **Never apply below -93.3 kPa (-0.952 kg/cm^2, -13.53 psi) or pressure over 101.3 kPa (1.033 kg/cm^2, 14.69 psi).**

4. If NG, replace EVAP control system pressure sensor.

DTC P0452 EVAP CONTROL SYSTEM PRESSURE SENSOR

Component Description

INFOID:0000000005286037

The EVAP control system pressure sensor (1) detects pressure in the purge line. The sensor output voltage to the ECM increases as pressure increases.
- This illustration is a view from under vehicle
- EVAP canister (2)
- EVAP canister vent control valve (3)

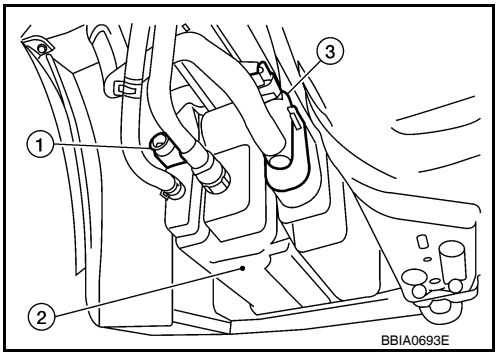

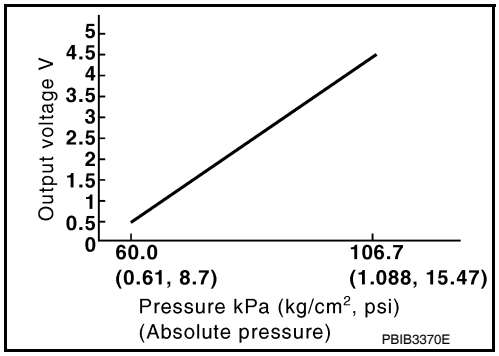

CONSULT-III Reference Value in Data Monitor Mode

INFOID:0000000005286038

Specification data are reference values.

Monitor item	Condition	Specification
EVAP SYS PRES	• Ignition switch: ON	1.8 - 4.8 V

On Board Diagnosis Logic

INFOID:0000000005286039

DTC No.	Trouble diagnosis name	DTC detecting condition	Possible cause
P0452 0452	EVAP control system pressure sensor low input	An excessively low voltage from the sensor is sent to ECM.	• Harness or connectors (EVAP control system pressure sensor circuit is open or sorted.) [Crankshaft position sensor (POS) circuit is shorted.] (Accelerator pedal position sensor circuit is shorted.) (Refrigerant pressure sensor circuit is shorted.) • EVAP control system pressure sensor • Crankshaft position sensor (POS) • Accelerator pedal position sensor • Refrigerant pressure sensor

DTC Confirmation Procedure

INFOID:0000000005286040

NOTE:
If DTC Confirmation Procedure has been previously conducted, always turn ignition switch OFF and wait at least 10 seconds before conducting the next test.
TESTING CONDITION:
Always perform test at a temperature of 5°C (41°F) or more.

WITH CONSULT-III

1. Start engine and warm it up to normal operating temperature.
2. Turn ignition switch OFF and wait at least 10 seconds.
3. Turn ignition switch ON.
4. Select “DATA MONITOR” mode with CONSULT-III.
5. Check that “FUEL T/TMP SE” is more than 0°C (32°F).
6. Start engine and wait at least 20 seconds.
7. Check 1st trip DTC.
8. If 1st trip DTC is detected, go to EC-1485, "Diagnosis Procedure".

WITH GST

1. Start engine and warm it up to normal operating temperature.
2. Check that voltage between ECM terminal 95 (Fuel tank temperature sensor signal) and ground is less than 4.2 V.
3. Turn ignition switch OFF and wait at least 10 seconds.
4. Start engine and wait at least 20 seconds.
5. Select Service $07 with GST.
6. If 1st trip DTC is detected, go to EC-1485, "Diagnosis Procedure".

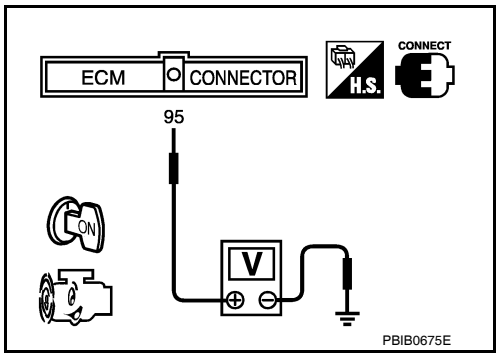

Wiring Diagram

INFOID:0000000005286041

EC-PRE/SE-01

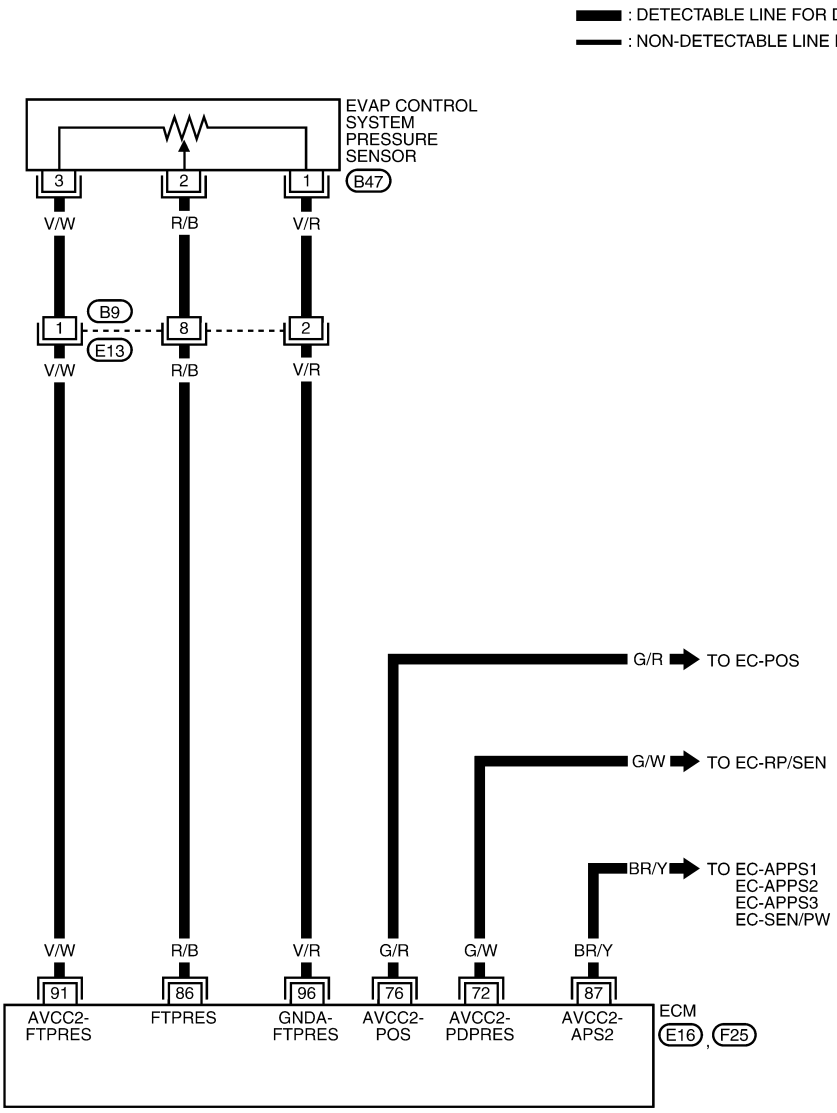

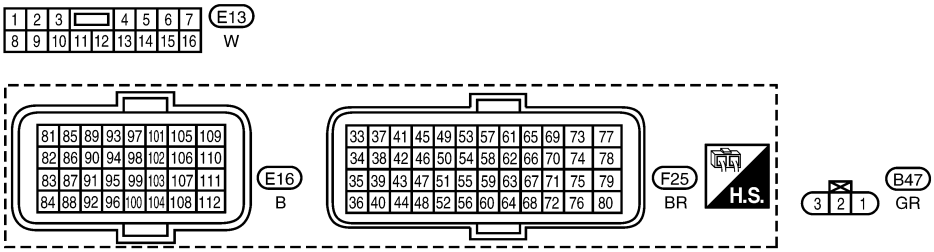

ABBWA0212GB

Specification data are reference values and are measured between each terminal and ground.

CAUTION:

Never use ECM ground terminals when measuring input/output voltage. Doing so may result in damage to the ECM's transistor. Use a ground other than ECM terminals, such as the ground.

TERMINAL NO.	WIRE COLOR	ITEM	CONDITION	DATA (DC Voltage)
72	G/W	Sensor power supply (Refrigerant pressure sensor)	**[Ignition switch: ON]**	Approximately 5 V
76	G/R	Sensor power supply [Crankshaft position sensor (POS)]	**[Ignition switch: ON]**	Approximately 5 V
86	R/B	EVAP control system pressure sensor	**[Ignition switch: ON]**	Approximately 1.8 - 4.8 V
87	BR/Y	Sensor power supply (APP sensor 2)	**[Ignition switch: ON]**	Approximately 5 V
91	V/W	EVAP control system pressure sensor power supply	**[Ignition switch: ON]**	Approximately 5 V
96	V/R	Sensor ground (EVAP control system pressure sensor)	**[Engine is running]** • **Warm-up condition** • Idle speed	Approximately 0 V

Diagnosis Procedure

INFOID:0000000005286042

1. CHECK GROUND CONNECTIONS

1. Turn ignition switch OFF.
2. Loosen and retighten ground screws on the body.
   Refer to EC-1251, "Ground Inspection".

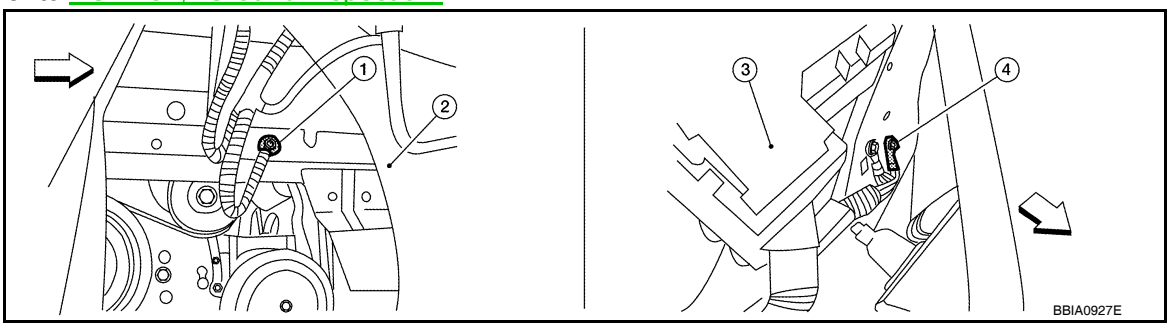

⇦: Vehicle front

1. Body ground E9 (view with front wheel RH and fender protector RH removed.)
2. Washer tank
3. Fuse and fusible link box
4. Body ground E15

OK or NG

OK >> GO TO 2.
NG >> Repair or replace ground connections.

2. CHECK CONNECTOR

1. Disconnect EVAP control system pressure sensor (1) harness connector.
- This illustration is a view from under vehicle
- EVAP canister (2)
- EVAP canister vent control valve (3)
2. Check that water is not inside connectors.

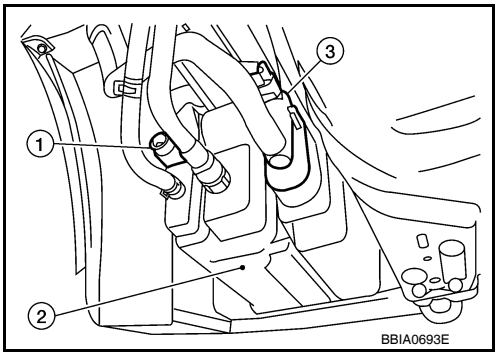

OK or NG

OK >> GO TO 3.
NG >> Repair or replace harness connector.

3. CHECK EVAP CONTROL SYSTEM PRESSURE SENSOR POWER SUPPLY CIRCUIT-I

1. Turn ignition switch ON.
2. Check voltage between EVAP control system pressure sensor terminal 3 and ground with CONSULT-III or tester.

Voltage: Approximately 5 V

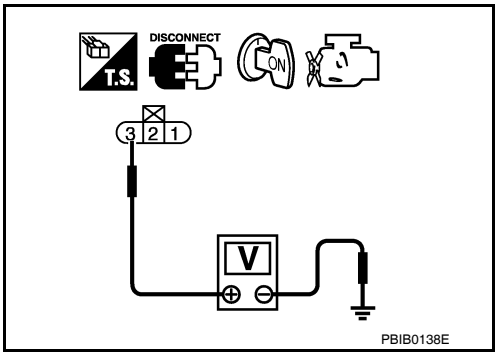

OK or NG

OK >> GO TO 11.
NG >> GO TO 4.

4. CHECK EVAP CONTROL SYSTEM PRESSURE SENSOR POWER SUPPLY CIRCUIT-II

1. Turn ignition switch OFF.
2. Disconnect ECM harness connector.
3. Check harness continuity between EVAP control system pressure sensor terminal 3 and ECM terminal 76. Refer to Wiring Diagram.

Continuity should exist.

OK or NG

OK >> GO TO 6.
NG >> GO TO 5.

5. DETECT MALFUNCTIONING PART

Check the following.
- Harness connectors B9, E13
- Harness for open between EVAP control system pressure sensor and ECM

>> Repair open circuit.

6. CHECK POWER SUPPLY CIRCUITS

Check harness for short to power and short to ground between the following terminals.

ECM terminal	Sensor terminal	Reference Wiring Diagram
72	Refrigerant pressure sensor terminal 3	EC-1667, "Wiring Diagram"
76	Crankshaft position sensor (POS) terminal 1	EC-1426, "Wiring Diagram"
87	APP sensor terminal 5	EC-1608, "Wiring Diagram"
91	EVAP control system pressure sensor terminal 3	EC-1484, "Wiring Diagram"

OK or NG

OK >> GO TO 7.
NG >> Repair short to ground or short to power in harness or connectors.

7. CHECK REFRIGERANT PRESSURE SENSOR

Refer to MTC-27.

OK or NG

OK >> GO TO 8.
NG >> Replace refrigerant pressure sensor.

8. CHECK CRANKSHAFT POSITION SENSOR (POS)

Refer to EC-1488, "Component Inspection".

OK or NG

OK >> GO TO 9.
NG >> Replace crankshaft position sensor (POS).

9. CHECK APP SENSOR

Refer to EC-1611, "Component Inspection".

OK or NG

OK >> GO TO 16.
NG >> GO TO 10.

10. REPLACE ACCELERATOR PEDAL ASSEMBLY

1. Replace accelerator pedal assembly.
2. Perform EC-1193, "Accelerator Pedal Released Position Learning".
3. Perform EC-1193, "Throttle Valve Closed Position Learning".
4. Perform EC-1193, "Idle Air Volume Learning".

>> **INSPECTION END**

11. CHECK EVAP CONTROL SYSTEM PRESSURE SENSOR GROUND CIRCUIT FOR OPEN AND SHORT

1. Turn ignition switch OFF.
2. Disconnect ECM harness connector.
3. Check harness continuity between EVAP control system pressure sensor terminal 1 and ECM terminal 96. Refer to Wiring Diagram.

Continuity should exist.

4. Also check harness for short to ground and short to power.

OK or NG

OK >> GO TO 13.
NG >> GO TO 12.

12. DETECT MALFUNCTIONING PART

Check the following.
- Harness connectors B9, E13
- Harness for open or short between EVAP control system pressure sensor and ECM

>> Repair open circuit or short to ground or short to power in harness or connectors.

13. CHECK EVAP CONTROL SYSTEM PRESSURE SENSOR INPUT SIGNAL CIRCUIT FOR OPEN AND SHORT

1. Check harness continuity between ECM terminal 86 and EVAP control system pressure sensor terminal 2. Refer to Wiring Diagram.

Continuity should exist.

2. Also check harness for short to ground and short to power.

OK or NG

OK >> GO TO 15.
NG >> GO TO 14.

14. DETECT MALFUNCTIONING PART

Check the following.
- Harness connectors B9, E13
- Harness for open or short between ECM and EVAP control system pressure sensor

>> Repair open circuit or short to ground or short to power in harness or connectors.

15. CHECK EVAP CONTROL SYSTEM PRESSURE SENSOR

Refer to EC-1488, "Component Inspection".

OK or NG

OK >> GO TO 16.
NG >> Replace EVAP control system pressure sensor.

16. CHECK INTERMITTENT INCIDENT

Refer to EC-1245.

>> **INSPECTION END**

Component Inspection

INFOID:0000000005286043

EVAP CONTROL SYSTEM PRESSURE SENSOR

1. Remove EVAP control system pressure sensor with its harness connector connected from EVAP canister. **Always replace O-ring with a new one.**
2. Install a vacuum pump to EVAP control system pressure sensor.
3. Turn ignition switch ON and check output voltage between ECM terminal 42 (EVAP control system pressure sensor signal) and ground under the following conditions.

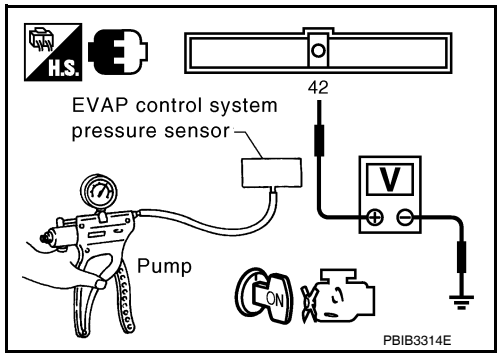

Applied vacuum kPa (kg/cm^2, psi)	Voltage (V)
Not applied	1.8 - 4.8
-26.7 (-0.272, -3.87)	2.1 to 2.5 V lower than above value

CAUTION:
- **Always calibrate the vacuum pump gauge when using it.**
- **Never apply below -93.3 kPa (-0.952 kg/cm^2, -13.53 psi) or pressure over 101.3 kPa (1.033 kg/cm^2, -).**

4. If NG, replace EVAP control system pressure sensor.

DTC P0453 EVAP CONTROL SYSTEM PRESSURE SENSOR

Component Description

INFOID:0000000005286044

The EVAP control system pressure sensor (1) detects pressure in the purge line. The sensor output voltage to the ECM increases as pressure increases.

- This illustration is a view from under vehicle
- EVAP canister (2)
- EVAP canister vent control valve (3)

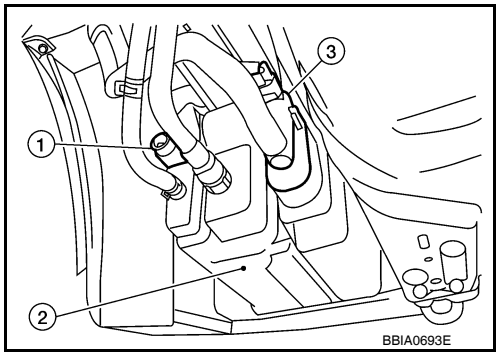

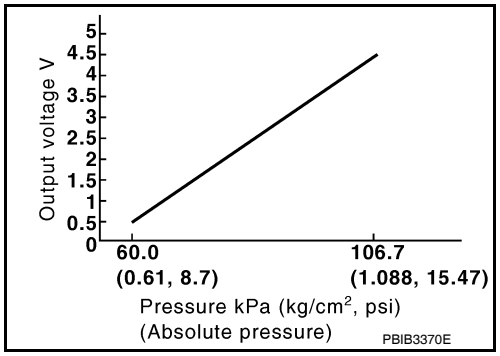

CONSULT-III Reference Value in Data Monitor Mode

INFOID:0000000005286045

Specification data are reference values.

Monitor item	Condition	Specification
EVAP SYS PRES	• Ignition switch: ON	Approx. 1.8 - 4.8 V

On Board Diagnosis Logic

INFOID:0000000005286046

DTC No.	Trouble diagnosis name	DTC detecting condition	Possible cause
P0453 0453	EVAP control system pressure sensor high input	An excessively high voltage from the sensor is sent to ECM.	• Harness or connectors (EVAP control system pressure sensor circuit is open or sorted.) [Crankshaft position sensor (POS) circuit is shorted.] (Accelerator pedal position sensor circuit is shorted.) (Refrigerant pressure sensor circuit is shorted.) • EVAP control system pressure sensor • Crankshaft position sensor (POS) • Accelerator pedal position sensor • Refrigerant pressure sensor • EVAP canister vent control valve • EVAP canister • Drain filter • Rubber hose to EVAP canister vent control valve

DTC Confirmation Procedure

INFOID:0000000005286047

NOTE:
If DTC Confirmation Procedure has been previously conducted, always turn ignition switch OFF and wait at least 10 seconds before conducting the next test.
TESTING CONDITION:
Always perform test at a temperature of 5°C (41°F) or more.

WITH CONSULT-III

1. Start engine and warm it up to normal operating temperature.
2. Turn ignition switch OFF and wait at least 10 seconds.
3. Turn ignition switch ON.
4. Select “DATA MONITOR” mode with CONSULT-III.
5. Check that “FUEL T/TMP SE” is more than 0°C (32°F).
6. Wait at least 10 seconds.
7. Check 1st trip DTC.
   If 1st trip DTC is detected, go to EC-1492, "Diagnosis Procedure".

WITH GST

1. Start engine and warm it up to normal operating temperature.
2. Check that voltage between ECM terminal 95 (Fuel tank temperature sensor signal) and ground is less than 4.2 V.
3. Turn ignition switch OFF and wait at least 10 seconds.
4. Wait at least 10 seconds.
5. Select Service $07 with GST.
   If 1st trip DTC is detected, go to EC-1492, "Diagnosis Procedure".

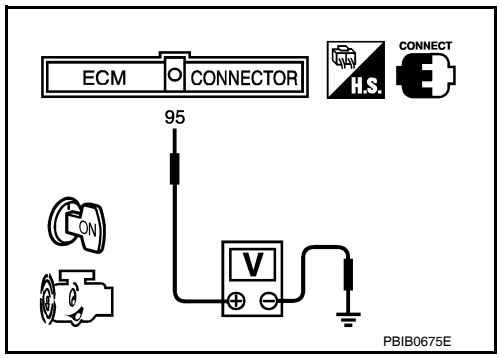

Wiring Diagram

INFOID:0000000005286048

EC-PRE/SE-01

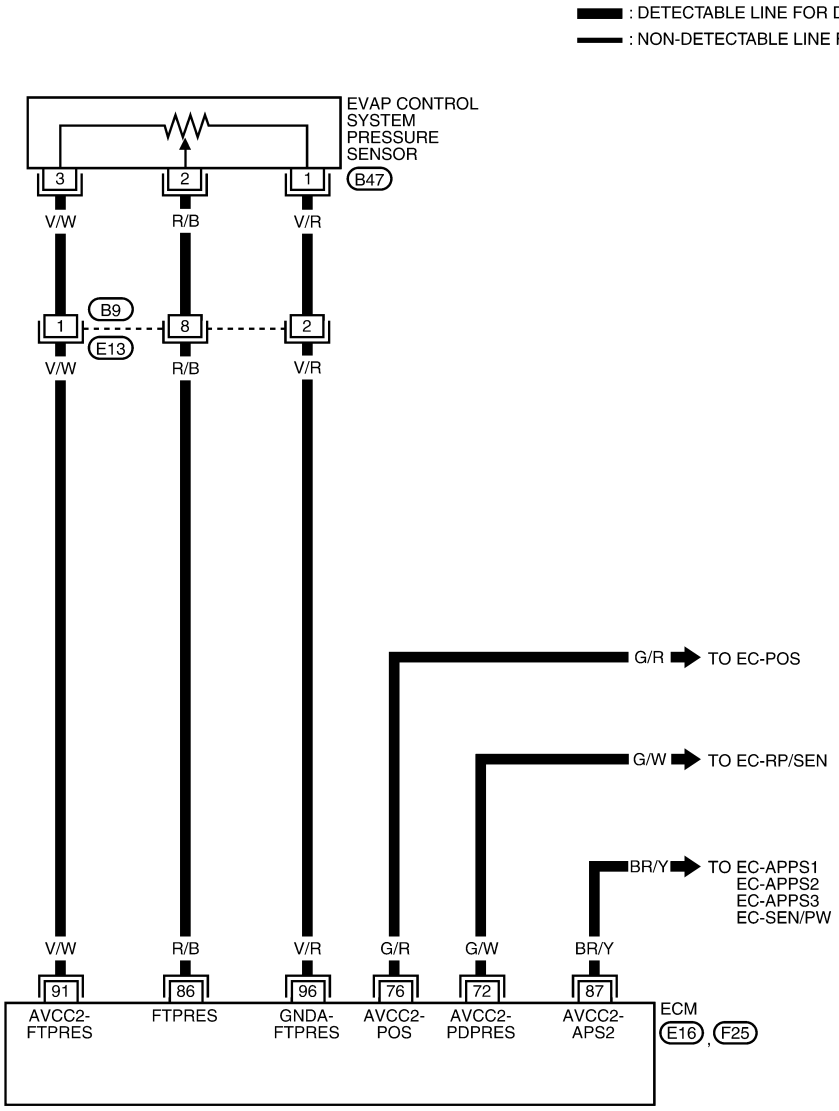

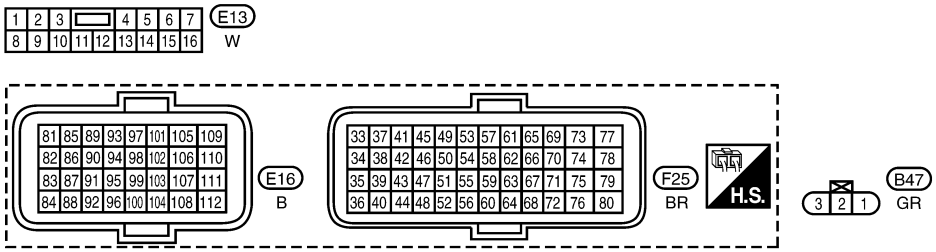

ABBWA0212GB

Specification data are reference values and are measured between each terminal and ground.

CAUTION:

Never use ECM ground terminals when measuring input/output voltage. Doing so may result in damage to the ECM's transistor. Use a ground other than ECM terminals, such as the ground.

TERMINAL NO.	WIRE COLOR	ITEM	CONDITION	DATA (DC Voltage)
72	G/W	Sensor power supply (Refrigerant pressure sensor)	**[Ignition switch: ON]**	Approximately 5 V
76	G/R	Sensor power supply [Crankshaft position sensor (POS)]	**[Ignition switch: ON]**	Approximately 5 V
86	R/B	EVAP control system pressure sensor	**[Ignition switch: ON]**	Approximately 1.8 - 4.8 V
87	BR/Y	Sensor power supply (APP sensor 2)	**[Ignition switch: ON]**	Approximately 5 V
91	V/W	EVAP control system pressure sensor power supply	**[Ignition switch: ON]**	Approximately 5 V
96	V/R	Sensor ground (EVAP control system pressure sensor)	**[Engine is running]** • **Warm-up condition** • Idle speed	Approximately 0 V

Diagnosis Procedure

INFOID:0000000005286049

1. CHECK GROUND CONNECTIONS

1. Turn ignition switch OFF.
2. Loosen and retighten ground screws on the body.
   Refer to EC-1251, "Ground Inspection".

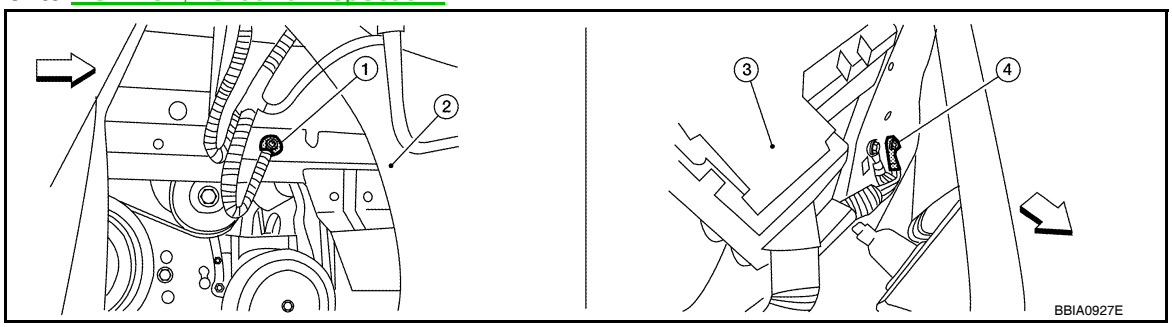

⇦: Vehicle front

1. Body ground E9 (view with front wheel RH and fender protector RH removed.)
2. Washer tank
3. Fuse and fusible link box
4. Body ground E15

OK or NG

OK >> GO TO 2.
NG >> Repair or replace ground connections.

2. CHECK CONNECTOR

1. Disconnect EVAP control system pressure sensor (1) harness connector.
- This illustration is a view from under vehicle
- EVAP canister (2)
- EVAP canister vent control valve (3)
2. Check that water is not inside connectors.

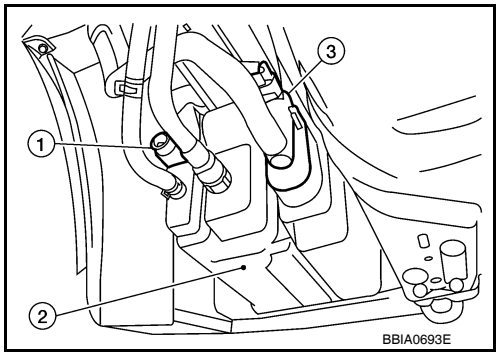

OK or NG

OK >> GO TO 3.
NG >> Repair or replace harness connector.

3. CHECK EVAP CONTROL SYSTEM PRESSURE SENSOR POWER SUPPLY CIRCUIT-I

1. Turn ignition switch ON.
2. Check voltage between EVAP control system pressure sensor terminal 3 and ground with CONSULT-III or tester.

Voltage: Approximately 5 V

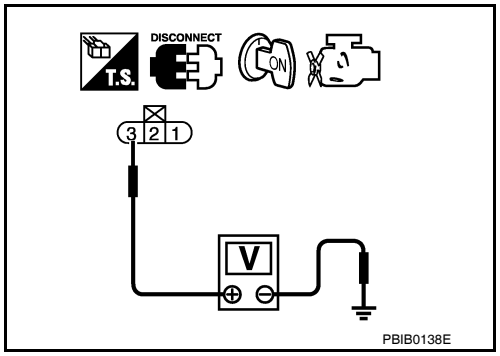

OK or NG

OK >> GO TO 11.
NG >> GO TO 4.

4. CHECK EVAP CONTROL SYSTEM PRESSURE SENSOR POWER SUPPLY CIRCUIT-II

1. Turn ignition switch OFF.
2. Disconnect ECM harness connector.
3. Check harness continuity between EVAP control system pressure sensor terminal 3 and ECM terminal 91. Refer to Wiring Diagram.

Continuity should exist.

OK or NG

OK >> GO TO 6.
NG >> GO TO 5.

5. DETECT MALFUNCTIONING PART

Check the following.
- Harness connectors B9, E13
- Harness for open between EVAP control system pressure sensor and ECM

>> Repair open circuit.

6. CHECK POWER SUPPLY CIRCUITS

Check harness for short to power and short to ground, between the following terminals.

ECM terminal	Sensor terminal	Reference Wiring Diagram
72	Refrigerant pressure sensor terminal 3	EC-1667, "Wiring Diagram"
76	Crankshaft position sensor (POS) terminal 1	EC-1426, "Wiring Diagram"
87	APP sensor terminal 5	EC-1608, "Wiring Diagram"
91	EVAP control system pressure sensor terminal 3	EC-1484, "Wiring Diagram"

OK or NG

OK >> GO TO 7.
NG >> Repair short to ground or short to power in harness or connectors.

7. CHECK REFRIGERANT PRESSURE SENSOR

Refer to MTC-27.

OK or NG

OK >> GO TO 8.
NG >> Replace refrigerant pressure sensor.

8. CHECK CRANKSHAFT POSITION SENSOR (POS)

Refer to EC-1488, "Component Inspection".

OK or NG

OK >> GO TO 9.
NG >> Replace crankshaft position sensor (POS).

9. CHECK APP SENSOR

Refer to EC-1611, "Component Inspection".

OK or NG

OK >> GO TO 22.
NG >> GO TO 10.

10. REPLACE ACCELERATOR PEDAL ASSEMBLY

1. Replace accelerator pedal assembly.
2. Perform EC-1193, "Accelerator Pedal Released Position Learning".
3. Perform EC-1193, "Throttle Valve Closed Position Learning".
4. Perform EC-1193, "Idle Air Volume Learning".

>> **INSPECTION END**

11. CHECK EVAP CONTROL SYSTEM PRESSURE SENSOR GROUND CIRCUIT FOR OPEN AND SHORT

1. Turn ignition switch OFF.
2. Disconnect ECM harness connector.
3. Check harness continuity between EVAP control system pressure sensor terminal 1 and ECM terminal 96. Refer to Wiring Diagram.

Continuity should exist.

4. Also check harness for short to ground and short to power.

OK or NG

OK >> GO TO 13.
NG >> GO TO 12.

12. DETECT MALFUNCTIONING PART

Check the following.
- Harness connectors B9, E13
- Harness for open or short between EVAP control system pressure sensor and ECM

>> Repair open circuit or short to ground or short to power in harness or connectors.

13. CHECK EVAP CONTROL SYSTEM PRESSURE SENSOR INPUT SIGNAL CIRCUIT FOR OPEN AND SHORT

1. Check harness continuity between ECM terminal 86 and EVAP control system pressure sensor terminal 2. Refer to Wiring Diagram.

Continuity should exist.

2. Also check harness for short to ground and short to power.

OK or NG

OK >> GO TO 15.
NG >> GO TO 14.

14. DETECT MALFUNCTIONING PART

Check the following.
- Harness connectors B9, E13
- Harness for open or short between ECM and EVAP control system pressure sensor

>> Repair open circuit or short to ground or short to power in harness or connectors.

15. CHECK RUBBER TUBE

1. Disconnect rubber tube connected to EVAP canister vent control valve.
2. Check the rubber tube for clogging, vent and kinked.

OK or NG

OK >> GO TO 16.
NG >> Clean the rubber tube using an air blower, repair or replace rubber tube.

16. CHECK EVAP CANISTER VENT CONTROL VALVE

Refer to EC-1472, "Component Inspection".

OK or NG

OK >> GO TO 17.
NG >> Replace EVAP canister vent control valve.

17. CHECK EVAP CONTROL SYSTEM PRESSURE SENSOR

Refer to EC-1496, "Component Inspection".

OK or NG

OK >> GO TO 18.
NG >> Replace EVAP control system pressure sensor.

18. CHECK DRAIN FILTER

Refer to EC-1446, "Component Inspection".

OK or NG

OK >> GO TO 19.
NG >> Replace drain filter.

19. CHECK IF EVAP CANISTER IS SATURATED WITH WATER

1. Remove EVAP canister with EVAP canister vent control valve and EVAP control system pressure sensor attached.
2. Does water drain from the EVAP canister?

Yes or No

Yes >> GO TO 20.
No >> GO TO 21.

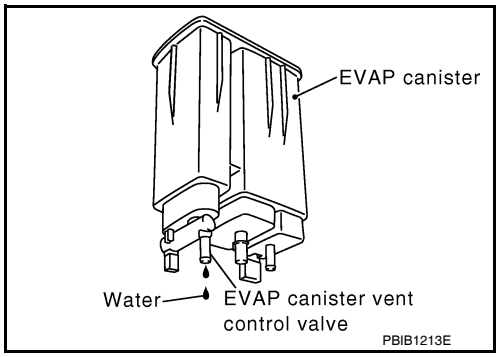

20. CHECK EVAP CANISTER

Weigh the EVAP canister with the EVAP canister vent control valve and EVAP control system pressure sensorattached.

The weight should be less than 1.9 kg (4.2 lb).

OK or NG

OK >> GO TO 22.
NG >> GO TO 21.

21. DETECT MALFUNCTIONING PART

Check the following.
- EVAP canister for damage
- EVAP hose between EVAP canister and drain filter for clogging or poor connection

>> Repair hose or replace EVAP canister.

22. CHECK INTERMITTENT INCIDENT

Refer to EC-1245.

>> **INSPECTION END**

Component Inspection

INFOID:0000000005286050

EVAP CONTROL PRESSURE SENSOR

1. Remove EVAP control system pressure sensor with its harness connector connected from EVAP canister. **Always replace O-ring with a new one.**
2. Install a vacuum pump to EVAP control system pressure sensor.
3. Turn ignition switch ON and check output voltage between ECM terminal 42 (EVAP control system pressure sensor signal) and ground under the following conditions.

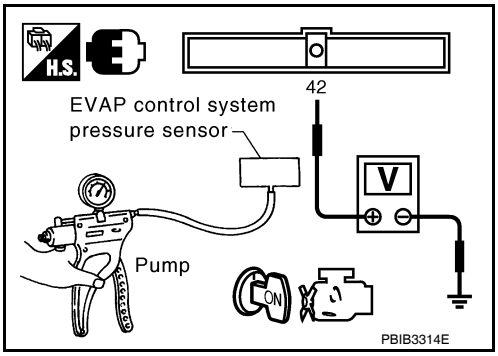

Applied vacuum kPa (kg/cm^2, psi)	Voltage (V)
Not applied	1.8 - 4.8
-26.7 (-0.272, -3.87)	2.1 to 2.5 V lower than above value

CAUTION:
- **Always calibrate the vacuum pump gauge when using it.**
- **Never apply below -93.3 kPa (-0.952 kg/cm^2, -13.53 psi) or pressure over 101.3 kPa (1.033 kg/cm^2, 14.69 psi).**

4. If NG, replace EVAP control system pressure sensor.

DTC P0455 EVAP CONTROL SYSTEM

On Board Diagnosis Logic

INFOID:0000000005286051

This diagnosis detects a very large leak (fuel filler cap fell off etc.) in EVAP system between the fuel tank and EVAP canister purge volume control solenoid valve.

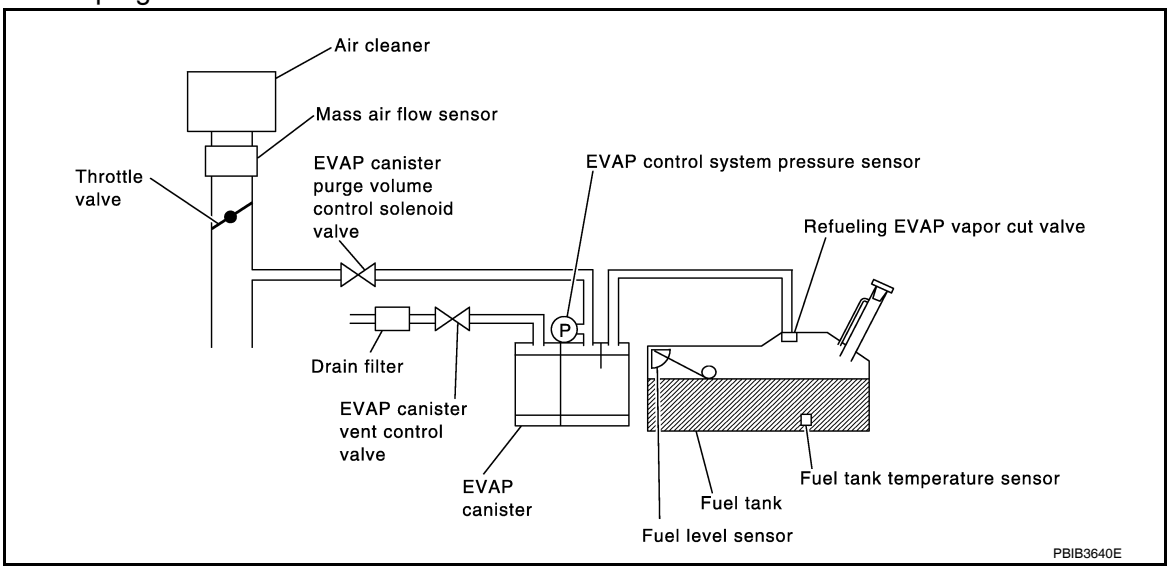

DTC No.	Trouble diagnosis name	DTC detecting condition	Possible cause
P0455 0455	EVAP control system gross leak detected	• EVAP control system has a very large leak such as fuel filler cap fell off. • EVAP control system does not operate properly.	• Fuel filler cap remains open or fails to close. • Incorrect fuel tank vacuum relief valve • Incorrect fuel filler cap used • Foreign matter caught in fuel filler cap • Leak is in line between intake manifold and EVAP canister purge volume control solenoid valve • Foreign matter caught in EVAP canister vent control valve. • EVAP canister or fuel tank leaks • EVAP purge line (pipe and rubber tube) leaks • EVAP purge line rubber tube bent. • Loose or disconnected rubber tube • EVAP canister vent control valve and the circuit • Drain filter • EVAP canister purge volume control solenoid valve and the circuit • Fuel tank temperature sensor • O-ring of EVAP canister vent control valve is missing or damaged. • EVAP control system pressure sensor • Refueling EVAP vapor cut valve • ORVR system leaks

CAUTION:
- **Use only a genuine NISSAN fuel filler cap as a replacement. If an incorrect fuel filler cap is used, the MIL may illuminate.**
- **If the fuel filler cap is not tightened properly, the MIL may illuminate.**
- **Use only a genuine NISSAN rubber tube as a replacement.**

DTC Confirmation Procedure

INFOID:0000000005286052

CAUTION:
Never remove fuel filler cap during the DTC Confirmation Procedure.

NOTE:
If DTC Confirmation Procedure has been previously conducted, always turn ignition switch OFF and wait at least 10 seconds before conducting the next test.

TESTING CONDITION:
- **Perform "DTC WORK SUPPORT" when the fuel level is between 1/4 and 3/4 full, and vehicle is placed on flat level surface.**
- **Open engine hood before conducting the following procedure.**

WITH CONSULT-III

1. Tighten fuel filler cap securely until reteaching sound is heard.
2. Turn ignition switch ON.
3. Turn ignition switch OFF and wait at least 10 seconds.
4. Turn ignition switch ON and select "DATA MONITOR" mode with CONSULT-III.
5. Check that the following conditions are met.
   COOLAN TEMP/S: 0 - 100°C (32 - 212°F)
   INT/A TEMP SE: 0 - 60°C (32 - 140°F)
6. Select "EVAP SML LEAK P0442/P1442" of "EVAPORATIVE SYSTEM" in "DTC WORK SUPPORT" mode with CONSULT-III.
   Follow the instruction displayed.
   NOTE:
   If the engine speed cannot be maintained within the range displayed on the CONSULT-III screen, go to EC-1187, "Basic Inspection".
7. Check that "OK" is displayed.
   If "NG" is displayed, select "SELF-DIAG RESULTS" mode with CONSULT-III and check that "EVAP GROSS LEAK [P0455]" is displayed. If it is displayed, refer to EC-1498, "Diagnosis Procedure".
   If P0442 is displayed, perform Diagnostic Procedure for DTC P0442, EC-1448, "Diagnosis Procedure".

WITH GST

NOTE:
Be sure to read the explanation of Driving Pattern on EC-1155, "Emission-related Diagnostic Information" before driving vehicle.

1. Start engine.
2. Drive vehicle according to Driving Pattern, EC-1155, "Emission-related Diagnostic Information".
3. Stop vehicle.
4. Turn ignition switch OFF, wait at least 10 seconds and then turn ignition switch ON.
5. Select Service $07 with GST.

- If P0441 is displayed on the screen, go to EC-1443, "Diagnosis Procedure".
- If P0442 is displayed on the screen, go to EC-1448, "Diagnosis Procedure".
- If P0455 is displayed on the screen, go to EC-1498, "Diagnosis Procedure".

Diagnosis Procedure

INFOID:0000000005286053

1. CHECK FUEL FILLER CAP DESIGN

1. Turn ignition switch OFF.
2. Check for genuine NISSAN fuel filler cap design.

OK or NG

OK >> GO TO 2.
NG >> Replace with genuine NISSAN fuel filler cap.

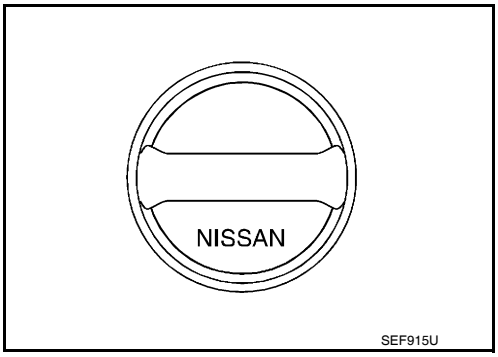

2. CHECK FUEL FILLER CAP INSTALLATION

Check that the cap is tightened properly by rotating the cap clockwise.

OK or NG

OK >> GO TO 3.
NG >> 1. Open fuel filler cap, then clean cap and fuel filler neck threads using air blower.
2. Retighten until reteaching sound is heard.

3. CHECK FUEL FILLER CAP FUNCTION

Check for air releasing sound while opening the fuel filler cap.

OK or NG

OK >> GO TO 5.
NG >> GO TO 4.

4. CHECK FUEL TANK VACUUM RELIEF VALVE

Refer to EC-1140, "Component Inspection".

OK or NG

OK >> GO TO 5.
NG >> Replace fuel filler cap with a genuine one.

5. CHECK EVAP PURGE LINE

Check EVAP purge line (pipe, rubber tube, fuel tank and EVAP canister) for cracks, improper connection or disconnection.
Refer to EC-1138.

OK or NG

OK >> GO TO 6.
NG >> Repair or reconnect the hose.

6. CLEAN EVAP PURGE LINE

Clean EVAP purge line (pipe and rubber tube) using air blower.

>> GO TO 7.

7. CHECK DRAIN FILTER

Refer to EC-1502, "Component Inspection".

OK or NG

OK >> GO TO 8.
NG >> Replace drain filter.

8. CHECK EVAP CANISTER VENT CONTROL VALVE

Check the following.
- EVAP canister vent control is installed properly.
  Refer to EC-1142, "Removal and Installation".
- EVAP canister vent control valve.
  Refer to EC-1472, "Component Inspection".

OK or NG

OK >> GO TO 9.
NG >> Repair or replace EVAP canister vent control valve and O-ring.

9. INSTALL THE PRESSURE PUMP

To locate the EVAP leak, install EVAP service port adapter and pressure pump to EVAP service port securely.
For the location of EVAP service port (1), refer to EC-1138, "Description".

• ⇦: Vehicle front

NOTE:

Improper installation of the EVAP service port adapter to the EVAP service port may cause leaking.

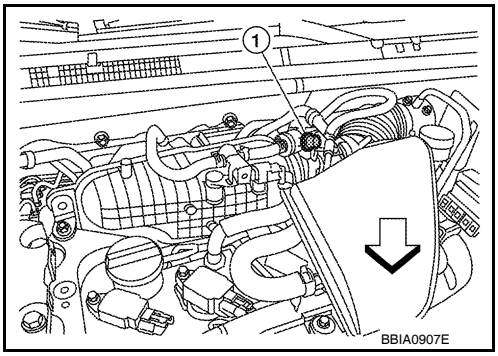

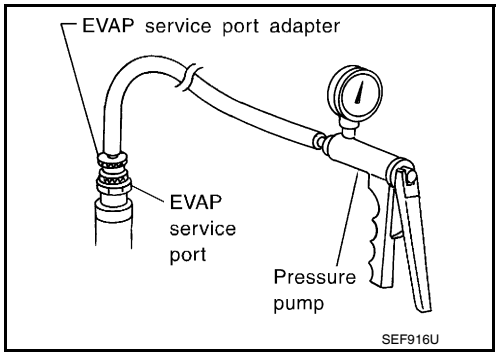

With CONSULT-III>>GO TO 10.
Without CONSULT-III>>GO TO 11.

10. CHECK FOR EVAP LEAK

With CONSULT-III

1. Turn ignition switch ON.
2. Select “EVAP SYSTEM CLOSE” of “WORK SUPPORT” mode with CONSULT-III.
3. Touch “START” and apply pressure into the EVAP line until the pressure indicator reaches the middle of the bar graph.
   CAUTION:
   - **Never use compressed air or a high pressure pump.**
   - **Never exceed 4.12 kPa (0.042 kg/cm^2, 0.6 psi) of pressure in the system.**
4. Using EVAP leak detector, locate the EVAP leak. For the leak detector, refer to the instruction manual for more details.
   Refer to EC-1138, "Description".

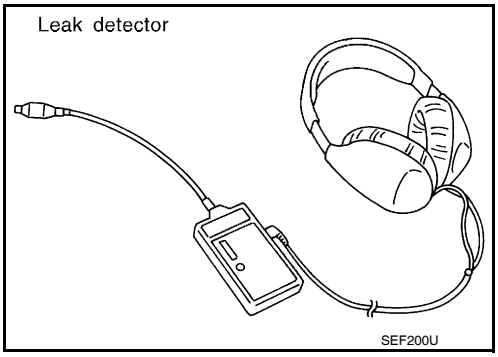

OK or NG

OK >> GO TO 12.
NG >> Repair or replace.

11. CHECK FOR EVAP LEAK

Without CONSULT-III

1. Turn ignition switch OFF.

2. Apply 12 volts DC to EVAP canister vent control valve (3). The valve will close. (Continue to apply 12 volts until the end of test.)
- This illustration is a view from under vehicle
- EVAP control system pressure sensor (1)
- EVAP canister (2)
3. Pressurize the EVAP line using pressure pump with 1.3 to 2.7 kPa (0.013 to 0.028 kg/cm^2, 0.19 to 0.39 psi), then remove pump and EVAP service port adapter.
   CAUTION:
   - **Never use compressed air or a high pressure pump.**
   - **Never exceed 4.12 kPa (0.042 kg/cm^2, 0.6 psi) of pressure in the system.**
4. Using EVAP leak detector, locate the EVAP leak. For the leak detector, refer to the instruction manual for more details.
   Refer to EC-1138, "Description".

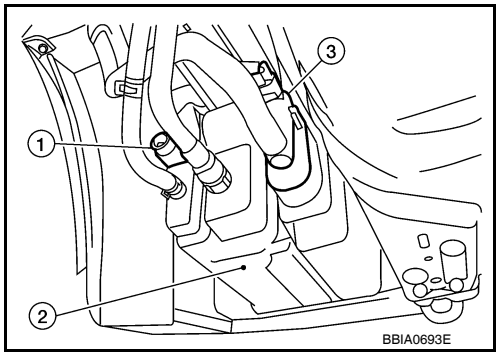

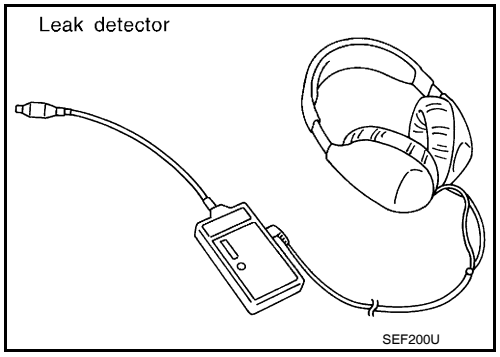

OK or NG

OK >> GO TO 13.
NG >> Repair or replace.

12. CHECK EVAP CANISTER PURGE VOLUME CONTROL SOLENOID VALVE OPERATION

With CONSULT-III

1. Disconnect vacuum hose to EVAP canister purge volume control solenoid valve at EVAP service port.
2. Start engine.
3. Perform “PURG VOL CONT/V” in “ACTIVE TEST” mode.
4. Touch “Qu” on CONSULT-III screen to increase “PURG VOL CONT/V” opening to 100%.
5. Check vacuum hose for vacuum.

Vacuum should exist.

OK or NG

OK >> GO TO 15.
NG >> GO TO 14.

13. CHECK EVAP CANISTER PURGE VOLUME CONTROL SOLENOID VALVE OPERATION

Without CONSULT-III

1. Start engine and warm it up to normal operating temperature.
2. Stop engine.
3. Disconnect vacuum hose to EVAP canister purge volume control solenoid valve at EVAP service port.
4. Start engine and let it idle for at least 80 seconds.
5. Check vacuum hose for vacuum when revving engine up to 2,000 rpm.

Vacuum should exist.

OK or NG

OK >> GO TO 16.
NG >> GO TO 14.

14. CHECK VACUUM HOSE

Check vacuum hoses for clogging or disconnection. Refer to EC-1214, "Vacuum Hose Drawing".

OK or NG

OK (With CONSULT-III)>>GO TO 15.
OK (Without CONSULT-III)>>GO TO 16.
NG >> Repair or reconnect the hose.

15. CHECK EVAP CANISTER PURGE VOLUME CONTROL SOLENOID VALVE

With CONSULT-III

1. Start engine.
2. Perform “PURG VOL CONT/V” in “ACTIVE TEST” mode with CONSULT-III. Check that engine speed varies according to the valve opening.

OK or NG

OK >> GO TO 17.
NG >> GO TO 16.

16. CHECK EVAP CANISTER PURGE VOLUME CONTROL SOLENOID VALVE

Refer to EC-1467, "Component Inspection".

OK or NG

OK >> GO TO 17.
NG >> Replace EVAP canister purge volume control solenoid valve.

17. CHECK FUEL TANK TEMPERATURE SENSOR

Refer to EC-1405, "Component Inspection".

OK or NG

OK >> GO TO 18.
NG >> Replace fuel level sensor unit.

18. CHECK EVAP CONTROL SYSTEM PRESSURE SENSOR

Refer to EC-1488, "Component Inspection".

OK or NG

OK >> GO TO 19.
NG >> Replace EVAP control system pressure sensor.

19. CHECK EVAP/ORVR LINE

Check refueling EVAP/ORVR line between EVAP canister and fuel tank for clogging, kinks, looseness and improper connection. For location, refer to EC-1145.

OK or NG

OK >> GO TO 20.
NG >> Repair or replace hoses and tubes.

20. CHECK RECIRCULATION LINE

Check recirculation line between filler neck tube and fuel tank for clogging, kinks, cracks, looseness and improper connection.

OK or NG

OK >> GO TO 21.
NG >> Repair or replace hoses, tubes or filler neck tube.

21. CHECK REFUELING EVAP VAPOR CUT VALVE

Refer to EC-1148, "Component Inspection".

OK or NG

OK >> GO TO 22.
NG >> Replace refueling EVAP vapor cut valve with fuel tank.

22. CHECK INTERMITTENT INCIDENT

Refer to EC-1245.

>> **INSPECTION END**

Component Inspection

INFOID:0000000005286054

DRAIN FILTER

1. Check visually for insect nests in the drain filter air inlet.
2. Check visually for cracks or flaws in the appearance.
3. Check visually for cracks or flaws in the hose.
4. Blow air into port A and check that it flows freely out of port B.
5. Block port B.
6. Blow air into port A and check that there is no leakage.
7. If NG, replace drain filter.

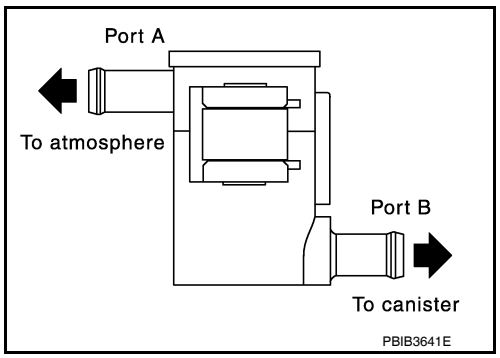

DTC P0456 EVAP CONTROL SYSTEM

On Board Diagnosis Logic

INFOID:0000000005286055

This diagnosis detects very small leaks in the EVAP line between fuel tank and EVAP canister purge volume control solenoid valve, using the intake manifold vacuum in the same way as conventional EVAP small leak diagnosis.
If ECM judges a leak which corresponds to a very small leak, the very small leak P0456 will be detected.
If ECM judges a leak equivalent to a small leak, EVAP small leak P0442 will be detected.
If ECM judges that there are no leaks, the diagnosis will be OK.

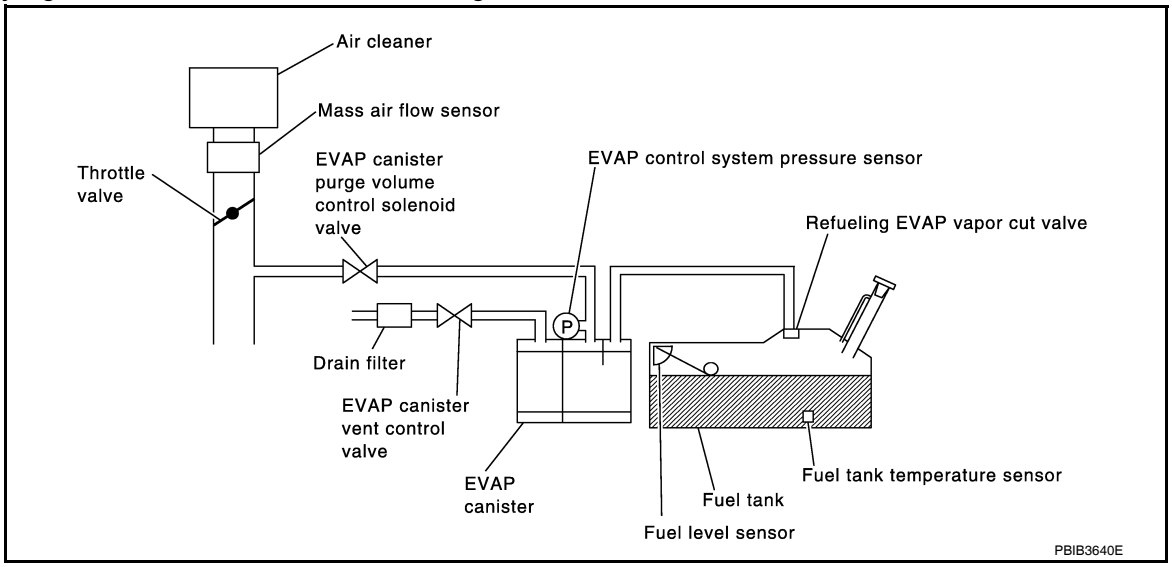

DTC No.	Trouble diagnosis name	DTC detecting condition	Possible cause
P0456 0456	Evaporative emission control system very small leak (negative pressure check)	• EVAP system has a very small leak. • EVAP system does not operate properly.	• Incorrect fuel tank vacuum relief valve • Incorrect fuel filler cap used • Fuel filler cap remains open or fails to close. • Foreign matter caught in fuel filler cap • Leak is in line between intake manifold and EVAP canister purge volume control solenoid valve. • Foreign matter caught in EVAP canister vent control valve • EVAP canister or fuel tank leaks • EVAP purge line (pipe and rubber tube) leaks • EVAP purge line rubber tube bent • Loose or disconnected rubber tube • EVAP canister vent control valve and the circuit • EVAP canister purge volume control solenoid valve and the circuit • Fuel tank temperature sensor • Drain filter • O-ring of EVAP canister vent control valve is missing or damaged • EVAP canister is saturated with water • EVAP control system pressure sensor • Refueling EVAP vapor cut valve • ORVR system leaks • Fuel level sensor and the circuit • Foreign matter caught in EVAP canister purge volume control solenoid valve

CAUTION:
- **Use only a genuine NISSAN fuel filler cap as a replacement. If an incorrect fuel filler cap is used, the MIL may illuminate.**
- **If the fuel filler cap is not tightened properly, the MIL may illuminate.**
- **Use only a genuine NISSAN rubber tube as a replacement.**

DTC Confirmation Procedure

INFOID:0000000005286056

NOTE:
- **If DTC P0456 is displayed with P0442, first perform trouble diagnosis for DTC P0456.**
- **After repair, check that the hoses and clips are installed properly.**
- If DTC Confirmation Procedure has been previously conducted, always turn ignition switch OFF and wait at least 10 seconds before conducting the next test.

TESTING CONDITION:
- **Open engine hood before conducting following procedure.**
- **If any of following conditions are met just before the DTC confirmation procedure, leave the vehicle for more than 1 hour.**
  - **Fuel filler cap is removed.**
  - **Refilled or drained the fuel.**
  - **EVAP component parts is/are removed.**
- **Before performing the following procedure, confirm that battery voltage is more than 11 V at idle.**

WITH CONSULT-III

1. Turn ignition switch ON and select “DATA MONITOR” mode with CONSULT-III.
2. Check that the following conditions are met.
   FUEL LEVEL SE: 0.25 - 1.4 V
   COOLAN TEMP/S: 0 - 32°C (32 - 90°F)
   FUEL T/TMP SE: 0 - 35°C (32 - 95°F)
   INT/A TEMP SE: More than 0°C (32°F)
   If NG, turn ignition switch OFF and leave the vehicle in a cool place (soak the vehicle), or refill/drain fuel until the output voltage of the “FUEL LEVEL SE” meets within the range above and leave the vehicle for more than 1 hour. Then start from step 1.
3. Turn ignition switch OFF and wait at least 10 seconds.
4. Turn ignition switch ON.
5. Select “EVAP V/S LEAK P0456” of “EVAPORATIVE SYSTEM” in “DTC WORK SUPPORT” mode with CONSULT-III.
   Follow the instruction displayed.
6. Check that “OK” is displayed.
   If “NG” is displayed, refer to EC-1506, "Diagnosis Procedure".
   NOTE:
   If the engine speed cannot be maintained within the range displayed on CONSULT-III screen, go to EC-1187, "Basic Inspection".

Overall Function Check

INFOID:0000000005286057

WITH GST

Use this procedure to check the overall function of the EVAP very small leak function. During this check, a 1st trip DTC might not be confirmed.

CAUTION:
- **Never use compressed air, doing so may damage the EVAP system.**
- **Never start engine.**
- **Never exceeded 4.12 kPa (0.042 kg/cm^2, 0.6 psi).**

1. Attach the EVAP service port (1) adapter securely to the EVAP service port.
   - ⇦: Vehicle front

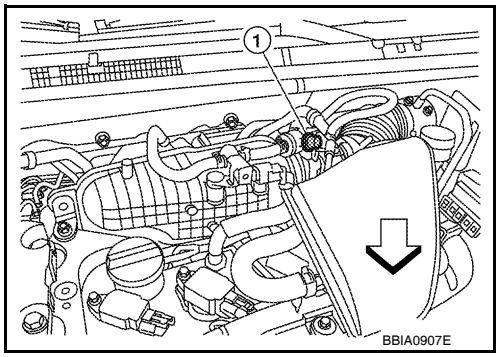

2. Set the pressure pump and a hose.
3. Also set the pressure pump with pressure gauge to the EVAP service port adapter.
4. Turn ignition switch ON.
5. Connect GST and select Service $08.
6. Using Service $08 control the EVAP canister vent control valve (close).
7. Apply pressure and check that the following conditions are satisfied.

   Pressure to be applied: 2.7 kPa (0.028 kg/cm^2, 0.39 psi)
   Time to be waited after the pressure drawn in to the EVAP system and the pressure to be dropped: 60 seconds and the pressure should not be dropped more than 0.4 kPa (0.0041 kg/cm^2, 0.06 psi).
   If NG, go to EC-1506, "Diagnosis Procedure".
   If OK, go to next step.

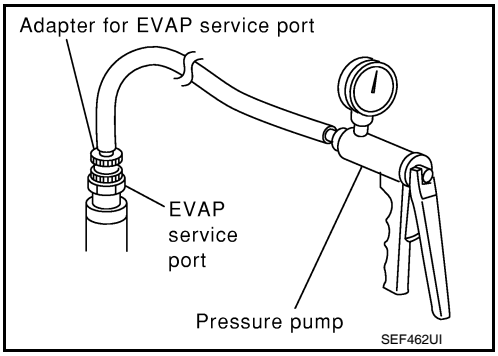

8. Disconnect GST.
9. Start engine and warm it up to normal operating temperature.
10. Turn ignition switch OFF and wait at least 10 seconds.
11. Restart engine and let it idle for 90 seconds.
12. Keep engine speed at 2,000 rpm for 30 seconds.
13. Turn ignition switch OFF.
    NOTE:
    For more information, refer to GST Instruction Manual.

Diagnosis Procedure

INFOID:0000000005286058

1. CHECK FUEL FILLER CAP DESIGN

1. Turn ignition switch OFF.
2. Check for genuine NISSAN fuel filler cap design.

OK or NG

OK >> GO TO 2.
NG >> Replace with genuine NISSAN fuel filler cap.

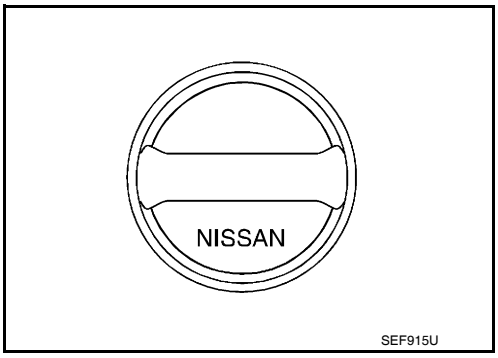

2. CHECK FUEL FILLER CAP INSTALLATION

Check that the cap is tightened properly by rotating the cap clockwise.

OK or NG

OK >> GO TO 3.
NG >> 1. Open fuel filler cap, then clean cap and fuel filler neck threads using air blower.
2. Retighten until reteaching sound is heard.

3. CHECK FUEL FILLER CAP FUNCTION

Check for air releasing sound while opening the fuel filler cap.

OK or NG

OK >> GO TO 5.
NG >> GO TO 4.

4. CHECK FUEL TANK VACUUM RELIEF VALVE

Refer to EC-1140, "Component Inspection".

OK or NG

OK >> GO TO 5.
NG >> Replace fuel filler cap with a genuine one.

5. INSTALL THE PRESSURE PUMP

To locate the EVAP leak, install EVAP service port (1) adapter and pressure pump to EVAP service port securely. For the location of EVAP service port, refer to EC-1138, "Description".

- ⇦: Vehicle front

NOTE:
Improper installation of the EVAP service port adapter to the EVAP service port may cause leaking.

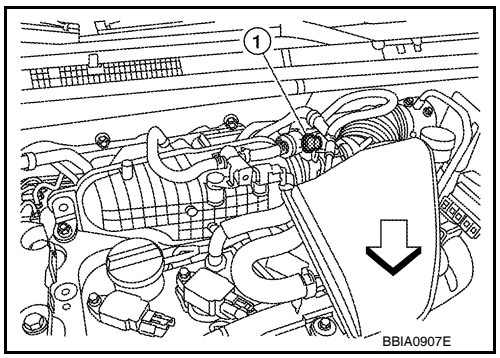

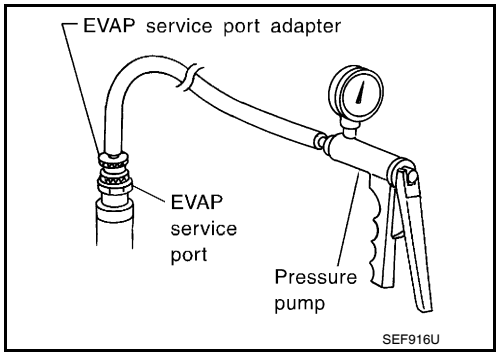

With CONSULT-III>>GO TO 6.
Without CONSULT-III>>GO TO 7.

6. CHECK FOR EVAP LEAK

With CONSULT-III

1. Turn ignition switch ON.
2. Select “EVAP SYSTEM CLOSE” of “WORK SUPPORT” mode with CONSULT-III.
3. Touch “START” and apply pressure into the EVAP line until the pressure indicator reaches the middle of the bar graph.
   CAUTION:
   - **Never use compressed air or a high pressure pump.**
   - **Never exceed 4.12 kPa (0.042 kg/cm^2, 0.6 psi) of pressure in the system.**
4. Using EVAP leak detector, locate the EVAP leak. For the leak detector, refer to the instruction manual for more details.
   Refer to EC-1138, "Description".

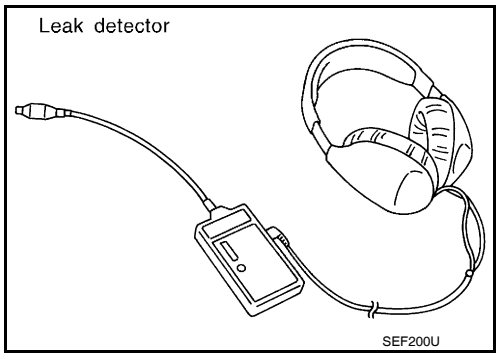

OK or NG

OK >> GO TO 8.
NG >> Repair or replace.

7. CHECK FOR EVAP LEAK

Without CONSULT-III

1. Turn ignition switch OFF.

2. Apply 12 volts DC to EVAP canister vent control valve (3). The valve will close. (Continue to apply 12 volts until the end of test.)
- This illustration is a view from under vehicle
- EVAP control system pressure sensor (1)
- EVAP canister (2)
3. Pressurize the EVAP line using pressure pump with 1.3 to 2.7 kPa (0.0133 to 0.028 kg/cm^2, 0.19 to 0.39 psi), then remove pump and EVAP service port adapter.
   CAUTION:
   - **Never use compressed air or a high pressure pump.**
   - **Never exceed 4.12 kPa (0.042 kg/cm^2, 0.6 psi) of pressure in the system.**
4. Using EVAP leak detector, locate the EVAP leak. For the leak detector, refer to the instruction manual for more details.
   Refer to EC-1138, "Description".

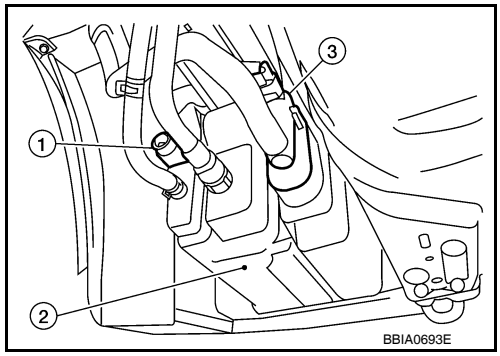

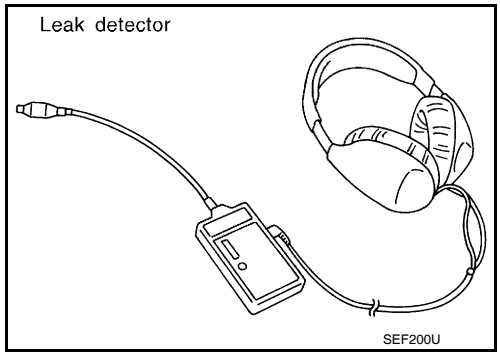

OK or NG

OK >> GO TO 8.
NG >> Repair or replace.

8. CHECK DRAIN FILTER

Refer to EC-1510, "Component Inspection".

OK or NG

OK >> GO TO 9.
NG >> Replace drain filter.

9. CHECK EVAP CANISTER VENT CONTROL VALVE

Check the following.
- EVAP canister vent control valve is installed properly.
  Refer to EC-1142, "Removal and Installation".
- EVAP canister vent control valve.
  Refer to EC-1472, "Component Inspection".

OK or NG

OK >> GO TO 10.
NG >> Repair or replace EVAP canister vent control valve and O-ring.

10. CHECK IF EVAP CANISTER IS SATURATED WITH WATER

1. Remove EVAP canister with EVAP canister vent control valve and EVAP control system pressure sensor attached.
2. Does water drain from the EVAP canister?

Yes or No

Yes >> GO TO 11.
No (With CONSULT-III)>>GO TO 13.
No (Without CONSULT-III)>>GO TO 14.

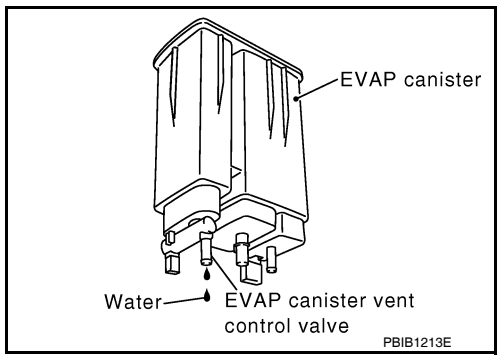

11. CHECK EVAP CANISTER

Weigh the EVAP canister with the EVAP canister vent control valve and EVAP control system pressure sensor attached.

The weight should be less than 1.9 kg (4.2 lb).

OK or NG

OK (With CONSULT-III)>>GO TO 13.
OK (Without CONSULT-III)>>GO TO 14.
NG >> GO TO 12.

12. DETECT MALFUNCTIONING PART

Check the following.
- EVAP canister for damage
- EVAP hose between EVAP canister and vehicle frame for clogging or poor connection

>> Repair hose or replace EVAP canister.

13. CHECK EVAP CANISTER PURGE VOLUME CONTROL SOLENOID VALVE OPERATION

With CONSULT-III

1. Disconnect vacuum hose connected to EVAP service port and EVAP canister purge volume control solenoid valve from EVAP service port.
2. Start engine.
3. Perform “PURG VOL CONT/V” in “ACTIVE TEST” mode.
4. Touch “Qu” on CONSULT-III screen to increase “PURG VOL CONT/V” opening to 100%.
5. Check vacuum hose for vacuum.

Vacuum should exist.

OK or NG

OK >> GO TO 16.
NG >> GO TO 15.

14. CHECK EVAP CANISTER PURGE VOLUME CONTROL SOLENOID VALVE OPERATION

Without CONSULT-III

1. Start engine and warm it up to normal operating temperature.
2. Stop engine.
3. Disconnect vacuum hose connected to EVAP service port and EVAP canister purge volume control solenoid valve from EVAP service port.
4. Start engine and let it idle for at least 80 seconds.
5. Check vacuum hose for vacuum when revving engine up to 2,000 rpm.

Vacuum should exist.

OK or NG

OK >> GO TO 17.
NG >> GO TO 15.

15. CHECK VACUUM HOSE

Check vacuum hoses for clogging or disconnection. Refer to EC-1214, "Vacuum Hose Drawing".

OK or NG

OK >> GO TO 16.
NG >> Repair or reconnect the hose.

16. CHECK EVAP CANISTER PURGE VOLUME CONTROL SOLENOID VALVE

Refer to EC-1467, "Component Inspection".

OK or NG

OK >> GO TO 17.
NG >> Replace EVAP canister purge volume control solenoid valve.

17. CHECK FUEL TANK TEMPERATURE SENSOR

Refer to EC-1405, "Component Inspection".

OK or NG

OK >> GO TO 18.
NG >> Replace fuel level sensor unit.

18. CHECK EVAP CONTROL SYSTEM PRESSURE SENSOR

Refer to EC-1488, "Component Inspection".

OK or NG

OK >> GO TO 19.
NG >> Replace EVAP control system pressure sensor.

19. CHECK EVAP PURGE LINE

Check EVAP purge line (pipe, rubber tube, fuel tank and EVAP canister) for cracks or improper connection. Refer to EC-1138, "Description".

OK or NG

OK >> GO TO 20.
NG >> Repair or reconnect the hose.

20. CLEAN EVAP PURGE LINE

Clean EVAP purge line (pipe and rubber tube) using air blower.

>> GO TO 21.

21. CHECK EVAP/ORVR LINE

Check EVAP/ORVR line between EVAP canister and fuel tank for clogging, kinks, looseness and improper connection. For location, refer to EC-1145.

OK or NG

OK >> GO TO 22.
NG >> Repair or replace hoses and tubes.

22. CHECK RECIRCULATION LINE

Check recirculation line between filler neck tube and fuel tank for clogging, kinks, cracks, looseness and improper connection.

OK or NG

OK >> GO TO 23.
NG >> Repair or replace hose, tube or filler neck tube.

23. CHECK REFUELING EVAP VAPOR CUT VALVE

Refer to EC-1148, "Component Inspection".

OK or NG

OK >> GO TO 24.
NG >> Replace refueling EVAP vapor cut valve with fuel tank.

24. CHECK FUEL LEVEL SENSOR

Refer to FL-6.

OK or NG

OK >> GO TO 25.
NG >> Replace fuel level sensor unit.

25. CHECK INTERMITTENT INCIDENT

Refer to EC-1245.

>> **INSPECTION END**

Component Inspection

INFOID:0000000005286059

DRAIN FILTER

1. Check visually for insect nests in the drain filter air inlet.
2. Check visually for cracks or flaws in the appearance.
3. Check visually for cracks or flaws in the hose.

4. Blow air into port A and check that it flows freely out of port B.
5. Block port B.
6. Blow air into port A and check that there is no leakage.
7. If NG, replace drain filter.

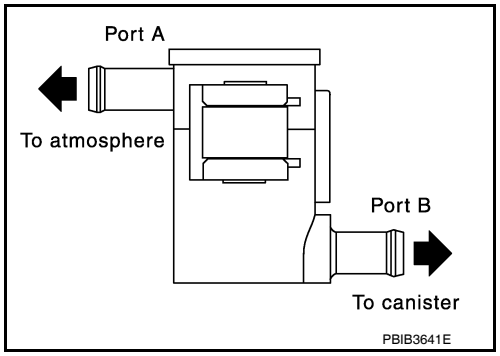

DTC P0460 FUEL LEVEL SENSOR

Component Description

INFOID:0000000005286060

The fuel level sensor (3) is mounted in the fuel level sensor unit. The sensor detects a fuel level in the fuel tank and transmits a signal to the combination meter. The combination meter sends the fuel level sensor signal to the ECM through CAN communication line.
It consists of two parts, one is mechanical float and the other is variable resistor. Fuel level sensor output voltage changes depending on the movement of the fuel mechanical float.

- Fuel level sensor unit and fuel pump (1)
- Fuel pressure regulator (2)
- Fuel tank temperature sensor (4)

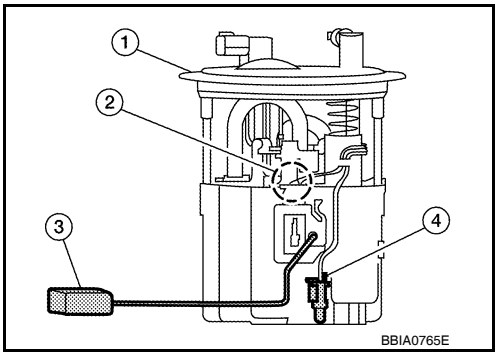

On Board Diagnosis Logic

INFOID:0000000005286061

NOTE:

- **If DTC P0460 is displayed with DTC UXXXX, first perform the trouble diagnosis for DTC UXXXX.**
- **If DTC P0460 is displayed with DTC P0607, first perform the trouble diagnosis for DTC P0607. Refer to EC-1529.**
  When the vehicle is parked, naturally the fuel level in the fuel tank is stable. It means that output signal of the fuel level sensor does not change. If ECM senses sloshing signal from the sensor, fuel level sensor malfunction is detected.

DTC No.	Trouble diagnosis name	DTC detecting condition	Possible cause
P0460 0460	Fuel level sensor circuit noise	Even though the vehicle is parked, a signal being varied is sent from the fuel level sensor to ECM.	• Harness or connectors (CAN communication line is open or shorted) • Harness or connectors (Fuel level sensor circuit is open or shorted) • Combination meter • Fuel level sensor

DTC Confirmation Procedure

INFOID:0000000005286062

NOTE:
If DTC Confirmation Procedure has been previously conducted, always turn ignition switch OFF and wait at least 10 seconds before conducting the next test.

1. Start engine and wait maximum of 2 consecutive minutes.
2. Check 1st trip DTC.
3. If 1st trip DTC is detected, go to EC-1512, "Diagnosis Procedure".

Diagnosis Procedure

INFOID:0000000005286063

1. CHECK FUEL GAUGE OPERATION

Refer to DI-14, "Self-Diagnosis Mode of Combination Meter".

OK or NG

OK >> GO TO 2.
NG >> Follow the instruction of DI-14, "Self-Diagnosis Mode of Combination Meter".

2. CHECK FUEL LEVEL SENSOR AND CIRCUIT

Refer to DI-20, "Fuel Level Sensor Signal Inspection".

OK or NG

OK >> GO TO 3.
NG >> Repair or replace malfunctioning parts.

3. CHECK INTERMITTENT INCIDENT

Refer to EC-1245.

>> **INSPECTION END**

Removal and Installation

INFOID:0000000005286064

FUEL LEVEL SENSOR

Refer to FL-6.

DTC P0461 FUEL LEVEL SENSOR

Component Description

INFOID:0000000005286065

The fuel level sensor (3) is mounted in the fuel level sensor unit. The sensor detects a fuel level in the fuel tank and transmits a signal to the combination meter. The combination meter sends the fuel level sensor signal to the ECM through CAN communication line.
It consists of two parts, one is mechanical float and the other is variable resistor. Fuel level sensor output voltage changes depending on the movement of the fuel mechanical float.

- Fuel level sensor unit and fuel pump (1)
- Fuel pressure regulator (2)
- Fuel tank temperature sensor (4)

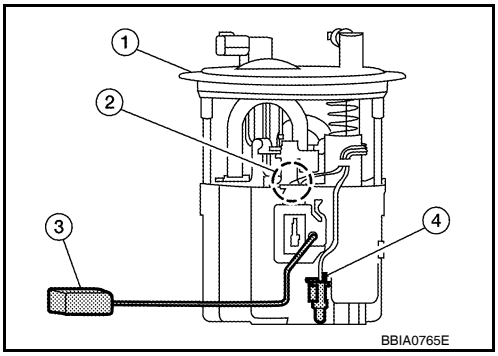

On Board Diagnosis Logic

INFOID:0000000005286066

NOTE:

- **If DTC P0461 is displayed with DTC UXXXX, first perform the trouble diagnosis for DTC UXXXX.**
- **If DTC P0461 is displayed with DTC P0607, first perform the trouble diagnosis for DTC P0607. Refer to EC-1529.**
  This diagnosis detects the fuel gauge malfunction of the gauge not moving even after a long distance has been driven.Driving long distances naturally affect fuel gauge level.

DTC No.	Trouble diagnosis name	DTC detecting condition	Possible cause
P0461 0461	Fuel level sensor circuit range/performance	The output signal of the fuel level sensor does not change within the specified range even though the vehicle has been driven a long distance.	• Harness or connectors (CAN communication line is open or shorted) • Harness or connectors (Fuel level sensor circuit is open or shorted) • Combination meter • Fuel level sensor

Overall Function Check

INFOID:0000000005286067

Use this procedure to check the overall function of the fuel level sensor function. During this check, a 1st trip DTC might not be confirmed.

WARNING:
When performing following procedure, be sure to observe the handling of the fuel.
Refer to FL-10.
TESTING CONDITION:
Before starting overall function check, preparation of draining fuel and refilling fuel is required.

WITH CONSULT-III

NOTE:
Start from step 10, if it is possible to confirm that the fuel cannot be drained by 30 ℓ (7-7/8 US gal, 6-5/8 Imp gal) in advance.

1. Prepare a fuel container and a spare hose.
2. Release fuel pressure from fuel line, refer to EC-1195, "Fuel Pressure Check".
3. Remove the fuel feed hose on the fuel level sensor unit.
4. Connect a spare fuel hose where the fuel feed hose was removed.
5. Turn ignition switch OFF and wait at least 10 seconds then turn ON.
6. Select “FUEL LEVEL SE” in “DATA MONITOR” mode with CONSULT-III.
7. Check “FUEL LEVEL SE” output voltage and note it.
8. Select “FUEL PUMP RELAY” in “ACTIVE TEST” mode with CONSULT-III.
9. Touch “ON” and drain fuel approximately 30 ℓ (7-7/8 US gal, 6-5/8 Imp gal) and stop it.
10. Check “FUEL LEVEL SE” output voltage and note it.
11. Fill fuel into the fuel tank for 30 ℓ (7-7/8 US gal, 6-5/8 Imp gal).

12. Check “FUEL LEVEL SE” output voltage and note it.
13. Confirm whether the voltage changes more than 0.03 V during step 7 to 10 and 10 to 12.
    If NG, go to EC-1515, "Diagnosis Procedure".

WITH GST

NOTE:
Start from step 8, if it is possible to confirm that the fuel cannot be drained by 30 ℓ (7-7/8 US gal, 6-5/8 Imp gal) in advance.

1. Prepare a fuel container and a spare hose.
2. Release fuel pressure from fuel line, refer to EC-1195, "Fuel Pressure Check".
3. Remove the fuel feed hose on the fuel level sensor unit.
4. Connect a spare fuel hose where the fuel feed hose was removed.
5. Turn ignition switch ON.
6. Drain fuel by 30 ℓ (7-7/8 US gal, 6-5/8 Imp gal) from the fuel tank using proper equipment.
7. Confirm that the fuel gauge indication varies.
8. Fill fuel into the fuel tank for 30 ℓ (7-7/8 US gal, 6-5/8 Imp gal).
9. Confirm that the fuel gauge indication varies.
10. If NG, go to EC-1515, "Diagnosis Procedure".

Diagnosis Procedure

INFOID:0000000005286068

1. CHECK FUEL GAUGE OPERATION

Refer to DI-14, "Self-Diagnosis Mode of Combination Meter".

OK or NG

OK >> GO TO 2.
NG >> Follow the instruction of DI-14, "Self-Diagnosis Mode of Combination Meter".

2. CHECK FUEL LEVEL SENSOR AND CIRCUIT

Refer to DI-20, "Fuel Level Sensor Signal Inspection".

OK or NG

OK >> GO TO 3.
NG >> Repair or replace malfunctioning parts.

3. CHECK INTERMITTENT INCIDENT

Refer to EC-1245.

>> **INSPECTION END**

Removal and Installation

INFOID:0000000005286069

FUEL LEVEL SENSOR

Refer to FL-6.

DTC P0462, P0463 FUEL LEVEL SENSOR

Component Description

INFOID:0000000005286070

The fuel level sensor (3) is mounted in the fuel level sensor unit. The sensor detects a fuel level in the fuel tank and transmits a signal to the combination meter. The combination meter. sends the fuel level sensor signal to the ECM through CAN communication line.
It consists of two parts, one is mechanical float and the other is variable resistor. Fuel level sensor output voltage changes depending on the movement of the fuel mechanical float.

- Fuel level sensor unit and fuel pump (1)
- Fuel pressure regulator (2)
- Fuel tank temperature sensor (4)

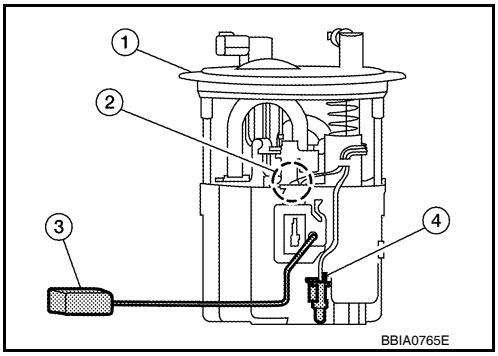

On Board Diagnosis Logic

INFOID:0000000005286071

NOTE:

- **If DTC P0462 or P0463 is displayed with DTC UXXXX, first perform the trouble diagnosis for DTC UXXXX.**
- **If DTC P0462 or P0463 is displayed with DTC P0607, first perform the trouble diagnosis for DTC P0607. Refer to EC-1529.**

DTC No.	Trouble diagnosis name	DTC detecting condition	Possible cause
P0462 0462	Fuel level sensor circuit low input	An excessively low voltage from the sensor is sent to ECM.	• Harness or connectors (CAN communication line is open or shorted) • Harness or connectors (Fuel level sensor circuit is open or shorted) • Combination meter • Fuel level sensor
P0463 0463	Fuel level sensor circuit high input	An excessively high voltage from the sensor is sent to ECM.	

DTC Confirmation Procedure

INFOID:0000000005286072

NOTE:
If DTC Confirmation Procedure has been previously conducted, always turn ignition switch OFF and wait at least 10 seconds before conducting the next test.
TESTING CONDITION:
Before performing the following procedure, confirm that battery voltage is more than 11 V at ignition switch ON.

1. Turn ignition switch ON and wait at least 5 seconds.
2. Check 1st trip DTC.
3. If 1st trip DTC is detected, go to EC-1516, "Diagnosis Procedure".

Diagnosis Procedure

INFOID:0000000005286073

1. CHECK FUEL GAUGE OPERATION

Refer to DI-14, "Self-Diagnosis Mode of Combination Meter".

OK or NG

OK >> GO TO 2.
NG >> Follow the instruction of DI-14, "Self-Diagnosis Mode of Combination Meter".

2. CHECK FUEL LEVEL SENSOR AND CIRCUIT

Refer to DI-20, "Fuel Level Sensor Signal Inspection".

OK or NG

OK >> GO TO 3.
NG >> Repair or replace malfunctioning parts.

3. CHECK INTERMITTENT INCIDENT

Refer to EC-1245.

>> **INSPECTION END**

Removal and Installation

INFOID:0000000005286074

FUEL LEVEL SENSOR

Refer to FL-6.

DTC P0500 VSS

Description

INFOID:0000000005286075

NOTE:
- **If DTC P0500 is displayed with DTC UXXXX, first perform the trouble diagnosis for DTC UXXXX.**
- **If DTC P0500 is displayed with DTC P0607, first perform the trouble diagnosis for DTC P0607. Refer to EC-1529.**

The vehicle speed signal is sent to the combination meter from “ABS actuator and electric unit (control unit)” through CAN communication line. The combination meter then sends a signal to the ECM through CAN communication line.

On Board Diagnosis Logic

INFOID:0000000005286076

DTC No.	Trouble diagnosis name	DTC detecting condition	Possible cause
P0500 0500	Vehicle speed sensor	The almost 0 km/h (0 MPH) signal from vehicle speed sensor is sent to ECM even when vehicle is being driven.	• Harness or connectors (CAN communication line is open or shorted.) • Harness or connectors (Vehicle speed signal circuit is open or shorted) • ABS actuator and electric unit (control unit) • Combination meter

FAIL-SAFE MODE

When the malfunction is detected, ECM enters fail-safe mode.

Detected item	Engine operating condition in fail-safe mode
Vehicle speed sensor	When the fail-safe system for vehicle speed sensor is activated, the cooling fan operates (High) while engine is running.

DTC Confirmation Procedure

INFOID:0000000005286077

CAUTION:
Always drive vehicle at a safe speed.
NOTE:
If DTC Confirmation Procedure has been previously conducted, always turn ignition switch OFF and wait at least 10 seconds before conducting the next test.
TESTING CONDITION:
Steps 1 and 2 may be conducted with the drive wheels lifted in the shop or by driving the vehicle. If a road test is expected to be easier, it is unnecessary to lift the vehicle.

WITH CONSULT-III

1. Start engine.
2. Read “VHCL SPEED SE” in “DATA MONITOR” mode with CONSULT-III. The vehicle speed on CONSULT-III should exceed 10 km/h (6 MPH) when rotating wheels with suitable gear position.
   If NG, go to EC-1519, "Diagnosis Procedure".
   If OK, go to following step.
3. Select “DATA MONITOR” mode with CONSULT-III.
4. Warm engine up to normal operating temperature.
5. Maintain the following conditions for at least 60 consecutive seconds.

ENG SPEED	More than 1,800 rpm (M/T) More than 1,600 rpm (CVT)
COOLAN TEMP/S	More than 70°C (158°F)
B/FUEL SCHDL	4.5 - 31.8 msec (M/T) 6.0 - 31.8 msec (CVT)
Selector lever	Suitable position
PW/ST SIGNAL	OFF

6. Check 1st trip DTC.
7. If 1st trip DTC is detected, go to EC-1519, "Diagnosis Procedure".

Overall Function Check

INFOID:0000000005286078

Use this procedure to check the overall function of the vehicle speed signal circuit. During this check, a 1st trip DTC might not be confirmed.

WITH GST

1. Lift up drive wheels.
2. Start engine.
3. Read vehicle speed signal in Service $01 with GST.
   The vehicle speed signal on GST should be able to exceed 10 km/h (6 MPH) when rotating wheels with suitable gear position.
4. If NG, go to EC-1519, "Diagnosis Procedure".

Diagnosis Procedure

INFOID:0000000005286079

1. CHECK DTC WITH “ABS ACTUATOR AND ELECTRIC UNIT (CONTROL UNIT)”

Refer to BRC-10.

OK or NG

OK >> GO TO 2.
NG >> Repair or replace.

2. CHECK COMBINATION METER

Refer to DI-6.

>> **INSPECTION END**

DTC P0506 ISC SYSTEM

Description

INFOID:0000000005286080

NOTE:
If DTC P0506 is displayed with other DTC, first perform the trouble diagnosis for the other DTC.
The ECM controls the engine idle speed to a specified level through the fine adjustment of the air, which is let into the intake manifold, by operating the electric throttle control actuator. The operating of the throttle valve is varied to allow for optimum control of the engine idling speed. The ECM calculates the actual engine speed from signals of crankshaft position sensor (POS) and camshaft position sensor (PHASE).
The ECM controls the electric throttle control actuator so that the engine speed coincides with the target value memorized in the ECM. The target engine speed is the lowest speed at which the engine can operate steadily. The optimum value stored in the ECM is determined by taking into consideration various engine conditions, such as during warming up, deceleration, and engine load (air conditioner, power steering and cooling fan operation, etc.).

On Board Diagnosis Logic

INFOID:0000000005286081

DTC No.	Trouble diagnosis name	DTC detecting condition	Possible cause
P0506 0506	Idle speed control system RPM lower than expected	The idle speed is less than the target idle speed by 100 rpm or more.	• Electric throttle control actuator • Intake air leak

DTC Confirmation Procedure

INFOID:0000000005286082

NOTE:
- If DTC Confirmation Procedure has been previously conducted, always turn ignition switch OFF and wait at least 10 seconds before conducting the next test.
- **If the target idle speed is out of the specified value, perform EC-1193, "Idle Air Volume Learning", before conducting DTC Confirmation Procedure. For the target idle speed, refer to the EC-1673.**

TESTING CONDITION:
- **Before performing the following procedure, confirm that battery voltage is more than 11 V at idle.**
- **Always perform the test at a temperature above –10°C (14°F).**

1. Start engine and warm it up to normal operating temperature.
2. Turn ignition switch OFF and wait at least 10 seconds.
3. Start engine and run it for at least 1 minute at idle speed.
4. Check 1st trip DTC.
5. If 1st trip DTC is detected, go to EC-1520, "Diagnosis Procedure".

Diagnosis Procedure

INFOID:0000000005286083

1. CHECK INTAKE AIR LEAK

1. Start engine and let it idle.
2. Listen for an intake air leak after the mass air flow sensor.

OK or NG

OK >> GO TO 2.
NG >> Discover air leak location and repair.

2. REPLACE ECM

1. Stop engine.
2. Replace ECM.
3. Perform initialization of NVIS (NATS) system and registration of all NVIS (NATS) ignition key IDs.
   Refer to BL-171, "ECM Re-communicating Function".
4. Perform EC-1193, "VIN Registration".
5. Perform EC-1193, "Accelerator Pedal Released Position Learning".
6. Perform EC-1193, "Throttle Valve Closed Position Learning".
7. Perform EC-1193, "Idle Air Volume Learning".

>> **INSPECTION END**

DTC P0507 ISC SYSTEM

Description

INFOID:0000000005286084

NOTE:
If DTC P0507 is displayed with other DTC, first perform the trouble diagnosis for the other DTC.
The ECM controls the engine idle speed to a specified level through the fine adjustment of the air, which is let into the intake manifold, by operating the electric throttle control actuator. The operating of the throttle valve is varied to allow for optimum control of the engine idling speed. The ECM calculates the actual engine speed from signals of camshaft position sensor (POS) and camshaft position sensor (PHASE).
The ECM controls the electric throttle control actuator so that the engine speed coincides with the target value memorized in the ECM. The target engine speed is the lowest speed at which the engine can operate steadily. The optimum value stored in the ECM is determined by taking into consideration various engine conditions, such as during warming up, deceleration, and engine load (air conditioner, power steering and cooling fan operation, etc.).

On Board Diagnosis Logic

INFOID:0000000005286085

DTC No.	Trouble diagnosis name	DTC detecting condition	Possible cause
P0507 0507	Idle speed control system RPM higher than expected	The idle speed is more than the target idle speed by 200 rpm or more.	• Electric throttle control actuator • Intake air leak • PCV system

DTC Confirmation Procedure

INFOID:0000000005286086

NOTE:
- If DTC Confirmation Procedure has been previously conducted, always turn ignition switch OFF and wait at least 10 seconds before conducting the next test.
- **If the target idle speed is out of the specified value, perform EC-1193, "Idle Air Volume Learning", before conducting DTC Confirmation Procedure. For the target idle speed, refer to the EC-1673.**

TESTING CONDITION:
- **Before performing the following procedure, confirm that battery voltage is more than 11 V at idle.**
- **Always perform the test at a temperature above –10°C (14°F).**

1. Start engine and warm it up to normal operating temperature.
2. Turn ignition switch OFF and wait at least 10 seconds.
3. Start engine and run it for at least 1 minute at idle speed.
4. Check 1st trip DTC.
5. If 1st trip DTC is detected, go to EC-1522, "Diagnosis Procedure".

Diagnosis Procedure

INFOID:0000000005286087

1. CHECK PCV HOSE CONNECTION

Confirm that PCV hose is connected correctly.

OK or NG

OK >> GO TO 2.
NG >> Repair or replace.

2. CHECK INTAKE AIR LEAK

1. Start engine and let it idle.
2. Listen for an intake air leak after the mass air flow sensor.

OK or NG

OK >> GO TO 3.
NG >> Discover air leak location and repair.

3. REPLACE ECM

1. Stop engine.
2. Replace ECM.

3. Perform initialization of NVIS (NATS) system and registration of all NVIS (NATS) ignition key IDs. Refer to BL-171, "ECM Re-communicating Function".
4. Perform EC-1193, "VIN Registration".
5. Perform EC-1193, "Accelerator Pedal Released Position Learning".
6. Perform EC-1193, "Throttle Valve Closed Position Learning".
7. Perform EC-1193, "Idle Air Volume Learning".

>> **INSPECTION END**

DTC P0603 ECM POWER SUPPLY

Component Description

INFOID:0000000005286088

Battery voltage is supplied to the ECM even when the ignition switch is turned OFF for the ECM memory function of the DTC memory, the air-fuel ratio feedback compensation value memory, the Idle Air Volume Learning value memory, etc.

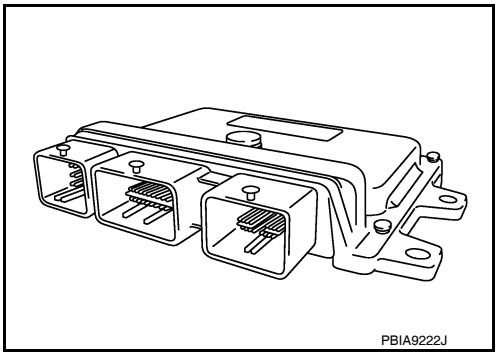

On Board Diagnosis Logic

INFOID:0000000005286089

DTC No.	Trouble diagnosis name	DTC detecting condition	Possible cause
P0603 0603	ECM power supply circuit	ECM back-up RAM system does not function properly.	• Harness or connectors [The ECM power supply (back-up) circuit is open or shorted.] • ECM

DTC Confirmation Procedure

INFOID:0000000005548697

NOTE:
If DTC Confirmation Procedure has been previously conducted, always turn ignition switch OFF and wait at least 10 seconds before conducting the next test.

1. Turn ignition switch ON and wait at least 10 seconds.
2. Turn ignition switch OFF and wait at least 5 minutes.
3. Turn ignition switch ON and wait at least 10 seconds.
4. Repeat steps 2 and 3 for five times.
5. Check 1st trip DTC.
6. If 1st trip DTC is detected, go to EC-1526, "Diagnosis Procedure".

Wiring Diagram

INFOID:0000000005286091

EC-ECM/PW-01

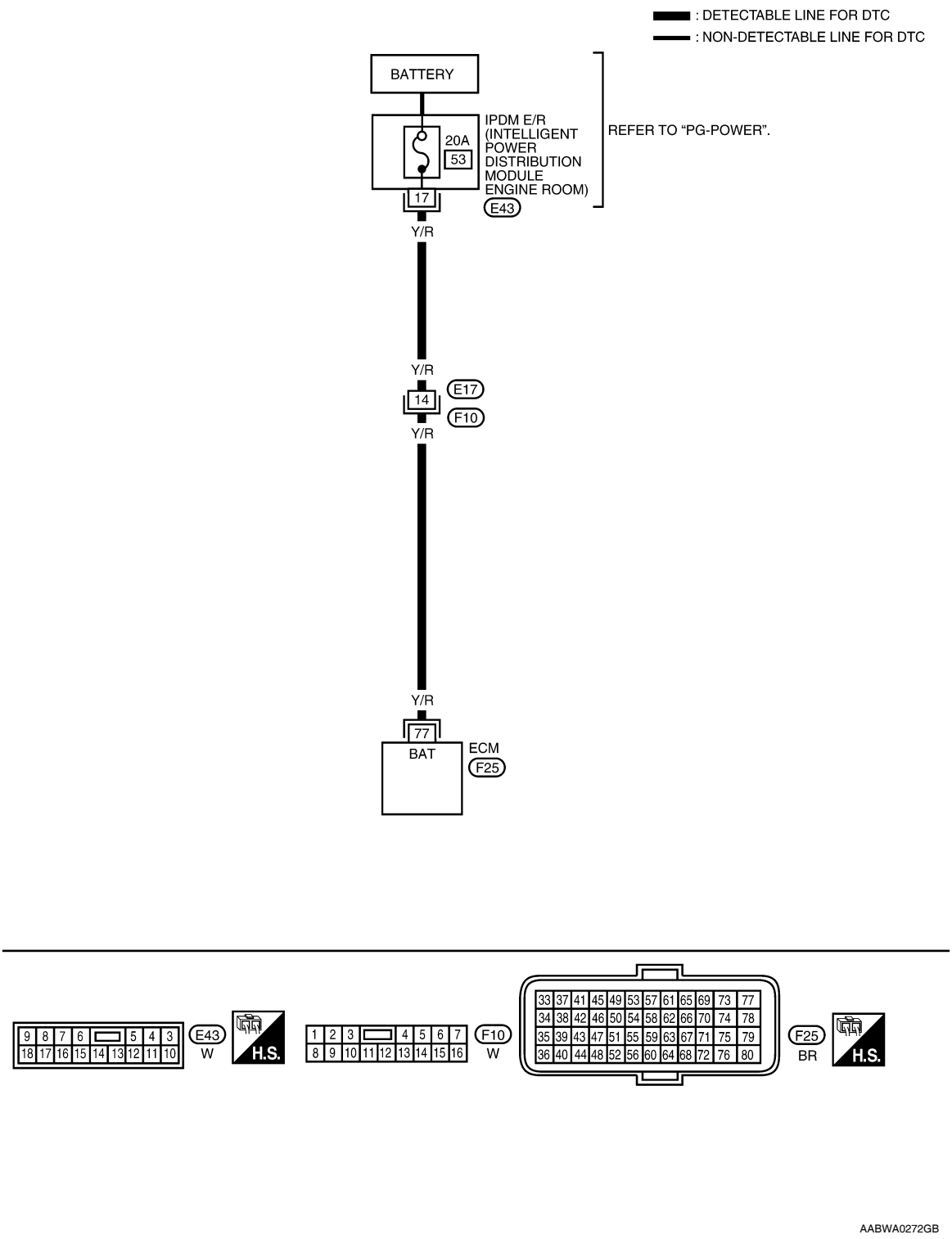

Specification data are reference values and are measured between each terminal and ground.

CAUTION:

Never use ECM ground terminals when measuring input/output voltage. Doing so may result in damage to the ECM's transistor. Use a ground other than ECM terminals, such as the ground.

TER-MI-NAL NO.	WIRE COLOR	ITEM	CONDITION	DATA (DC Voltage)
77	Y/R	Power supply for ECM (Back-up)	**[Ignition switch: OFF]**	BATTERY VOLTAGE (11 - 14 V)

Diagnosis Procedure

INFOID:0000000005286092

1. CHECK ECM POWER SUPPLY

1. Turn ignition switch OFF.
2. Check voltage between ECM terminal and ground with CONSULT-III or tester.

Voltage: Battery voltage

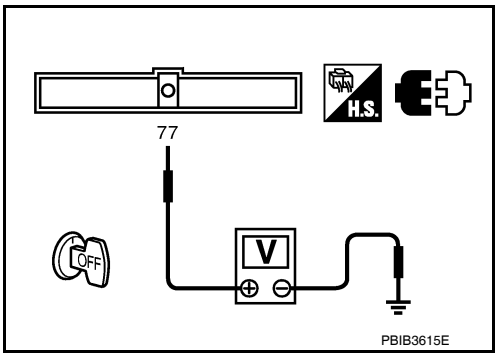

OK or NG

OK >> GO TO 3.
NG >> GO TO 2.

2. DETECT MALFUNCTIONING PART

Check the following.
- Harness connectors E17, F10
- 20 A fuse
- Harness for open or short between ECM and battery

>> Repair open circuit or short to ground or short to power in harness or connectors.

3. CHECK INTERMITTENT INCIDENT

Refer to EC-1245.

OK or NG

OK >> GO TO 4.
NG >> Repair or replace harness or connectors.

4. PERFORM DTC CONFIRMATION PROCEDURE

1. Erase DTC.
2. **Perform DTC Confirmation Procedure.**
   See EC-1524, "DTC Confirmation Procedure".
3. Is the 1st trip DTC P0603 displayed again?

Yes or No

Yes >> GO TO 5.
No >> **INSPECTION END**

5. REPLACE ECM

1. Replace ECM.
2. Perform initialization of NVIS (NATS) system and registration of all NVIS (NATS) ignition key IDs.
   Refer to BL-170.
3. Perform EC-1193, "VIN Registration".
4. Perform EC-1193, "Accelerator Pedal Released Position Learning".
5. Perform EC-1193, "Throttle Valve Closed Position Learning".
6. Perform EC-1193, "Idle Air Volume Learning".

>> **INSPECTION END**

DTC P0605 ECM

Component Description

INFOID:0000000005286093

The ECM consists of a microcomputer and connectors for signal input and output and for power supply. The ECM controls the engine.

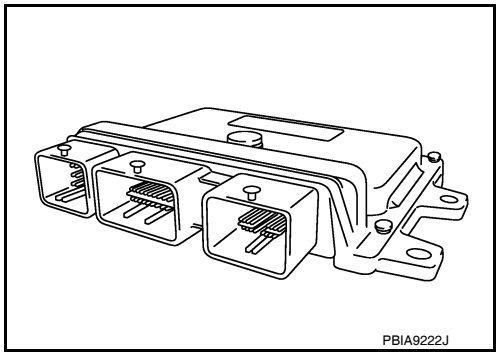

On Board Diagnosis Logic

INFOID:0000000005286094

This self-diagnosis has one or two trip detection logic.

DTC No.	Trouble diagnosis name	DTC detecting condition		Possible cause
P0605 0605	Engine control module	A)	ECM calculation function is malfunctioning.	• ECM
		B)	ECM EEP-ROM system is malfunctioning.	
		C)	ECM self shut-off function is malfunctioning.	

FAIL-SAFE MODE

ECM enters fail-safe mode when malfunction A is detected.

Detected items	Engine operation condition in fail-safe mode
Malfunction A	• ECM stops the electric throttle control actuator control, throttle valve is maintained at a fixed opening (approx. 5 degrees) by the return spring. • ECM deactivates ASCD operation.

DTC Confirmation Procedure

INFOID:0000000005286095

Perform PROCEDURE FOR MALFUNCTION A first. If the 1st trip DTC cannot be confirmed, perform PROCEDURE FOR MALFUNCTION B. If there is no malfunction on PROCEDURE FOR MALFUNCTION B, perform PROCEDURE FOR MALFUNCTION C.

NOTE:

If DTC Confirmation Procedure has been previously conducted, always turn ignition switch OFF and wait at least 10 seconds before conducting the next test.

PROCEDURE FOR MALFUNCTION A

1. Turn ignition switch ON.
2. Check 1st trip DTC.
3. If 1st trip DTC is detected, go to EC-1528, "Diagnosis Procedure".

PROCEDURE FOR MALFUNCTION B

1. Turn ignition switch ON and wait at least 1 second.
2. Turn ignition switch OFF, wait at least 10 seconds and then turn ON.
3. Check 1st trip DTC.
4. If 1st trip DTC is detected, go to EC-1528, "Diagnosis Procedure".

PROCEDURE FOR MALFUNCTION C

1. Turn ignition switch ON and wait at least 1 second.
2. Turn ignition switch OFF, wait at least 10 seconds and then turn ON.
3. Repeat step 2 for 32 times.

4. Check 1st trip DTC.
5. If 1st trip DTC is detected, go to EC-1528, "Diagnosis Procedure".

Diagnosis Procedure

INFOID:0000000005286096

1. INSPECTION START

1. Erase DTC.
2. **Perform DTC Confirmation Procedure.**
   See EC-1527, "DTC Confirmation Procedure".
3. Is the 1st trip DTC P0605 displayed again?

Yes or No

Yes >> GO TO 2.
No >> **INSPECTION END**

2. REPLACE ECM

1. Replace ECM.
2. Perform initialization of NVIS(NATS) system and registration of all NVIS(NATS) ignition key IDs.
   Refer to BL-171, "ECM Re-communicating Function".
3. Perform EC-1193, "VIN Registration".
4. Perform EC-1193, "Accelerator Pedal Released Position Learning".
5. Perform EC-1193, "Throttle Valve Closed Position Learning".
6. Perform EC-1193, "Idle Air Volume Learning".

>> **INSPECTION END**

DTC P0607 ECM

Description

INFOID:0000000005286097

CAN (Controller Area Network) is a serial communication line for real time application. It is an on-vehicle multiplex communication line with high data communication speed and excellent error detection ability. Many electronic control units are equipped onto a vehicle, and each control unit shares information and links with other control units during operation (not independent). In CAN communication, control units are connected with 2 communication lines (CAN H line, CAN L line) allowing a high rate of information transmission with less wiring. Each control unit transmits/receives data but selectively reads required data only.

On Board Diagnosis Logic

INFOID:0000000005286098

The MIL will not illuminate for this self-diagnosis.

DTC No.	Trouble diagnosis name	DTC detecting condition	Possible cause
P0607 0607	CAN communication bus	When detecting error during the initial diagnosis of CAN controller of ECM.	• ECM

DTC Confirmation Procedure

INFOID:0000000005286099

1. Turn ignition switch ON.
2. Check 1st trip DTC.
3. If 1st trip DTC is detected, go to EC-1529, "Diagnosis Procedure".

Diagnosis Procedure

INFOID:0000000005286100

1. INSPECTION START

1. Erase DTC.
2. **Perform DTC Confirmation Procedure.**
   See EC-1529, "DTC Confirmation Procedure".
3. Is the 1st trip DTC P0607 displayed again?

Yes or No

Yes >> GO TO 2.
No >> **INSPECTION END**

2. REPLACE ECM

1. Replace ECM.
2. Perform initialization of NVIS (NATS) system and registration of all NVIS (NATS) ignition key IDs.
   Refer to EC-1193, "VIN Registration".
3. Perform EC-1193, "Accelerator Pedal Released Position Learning".
4. Perform EC-1193, "Throttle Valve Closed Position Learning".
5. Perform EC-1193, "Idle Air Volume Learning".

>> **INSPECTION END**

DTC P0643 SENSOR POWER SUPPLY

On Board Diagnosis Logic

INFOID:0000000005286101

This self-diagnosis has the one trip detection logic.

DTC No.	Trouble diagnosis name	DTC detecting condition	Possible cause
P0643 0643	Sensor power supply circuit short	ECM detects a voltage of power source for sensor is excessively low or high.	• Harness or connectors (APP sensor 1 circuit is shorted.) (Throttle position sensor circuit is shorted.) [Camshaft position sensor (PHASE) circuit is shorted.] • Accelerator pedal position sensor (APP sensor 1) • Throttle position sensor (TP sensor 1 and 2) • Camshaft position sensor (PHASE)

FAIL-SAFE MODE

When the malfunction is detected, ECM enters fail-safe mode and the MIL illuminates.

Engine operation condition in fail-safe mode
ECM stops the electric throttle control actuator control, throttle valve is maintained at a fixed opening (approx. 5 degrees) by the return spring.

DTC Confirmation Procedure

INFOID:0000000005286102

NOTE:
If DTC Confirmation Procedure has been previously conducted, always turn ignition switch OFF and wait at least 10 seconds before conducting the next test.
TESTING CONDITION:
Before performing the following procedure, confirm that battery voltage is more than 8 V at idle.

1. Start engine and let it idle for 1 second.
2. Check DTC.
3. If DTC is detected, go to EC-1532, "Diagnosis Procedure".

Wiring Diagram

INFOID:0000000005286103

EC-SEN/PW-01

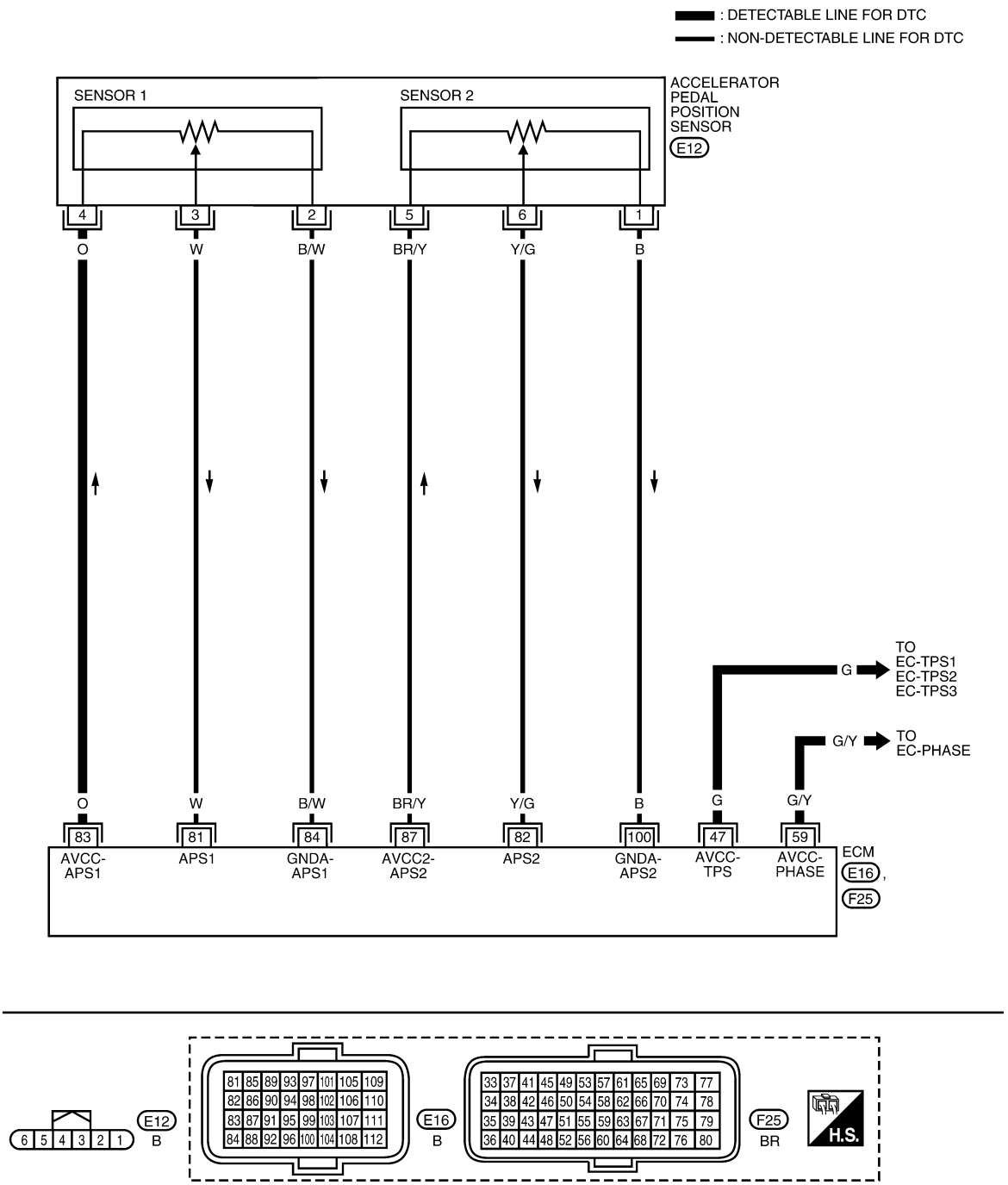

Specification data are reference values and are measured between each terminal and ground.

CAUTION:

Never use ECM ground terminals when measuring input/output voltage. Doing so may result in damage to the ECM's transistor. Use a ground other than ECM terminals, such as the ground.

TERMINAL NO.	WIRE COLOR	ITEM	CONDITION	DATA (DC Voltage)
47	G	Sensor power supply (Throttle position sensor)	**[Ignition switch: ON]**	Approximately 5 V
59	G/Y	Sensor power supply [Camshaft position sensor (PHASE)]	**[Ignition switch: ON]**	Approximately 5 V
81	W	Accelerator pedal position sensor 1	**[Ignition switch: ON]** • Engine stopped • Accelerator pedal: Fully released	0.6 - 0.9 V
			[Ignition switch: ON] • Engine stopped • Accelerator pedal: Fully depressed	3.9 - 4.7 V
82	Y/G	Accelerator pedal position sensor 2	**[Ignition switch: ON]** • Engine stopped • Accelerator pedal: Fully released	0.3 - 0.6 V
			[Ignition switch: ON] • Engine stopped • Accelerator pedal: Fully depressed	1.95 - 2.4 V
83	O	Sensor power supply (APP sensor 1)	**[Ignition switch: ON]**	Approximately 5 V
84	B/W	Sensor ground (APP sensor 1)	**[Engine is running]** • **Warm-up condition** • Idle speed	Approximately 0 V
87	BR/Y	Sensor power supply (APP sensor 2)	**[Ignition switch: ON]**	Approximately 5 V
100	B	Sensor ground (APP sensor 2)	**[Engine is running]** • **Warm-up condition** • Idle speed	Approximately 0 V

Diagnosis Procedure

INFOID:0000000005286104

1. CHECK GROUND CONNECTIONS

1. Turn ignition switch OFF.
2. Loosen and retighten ground screws on the body.
   Refer to EC-1251, "Ground Inspection".

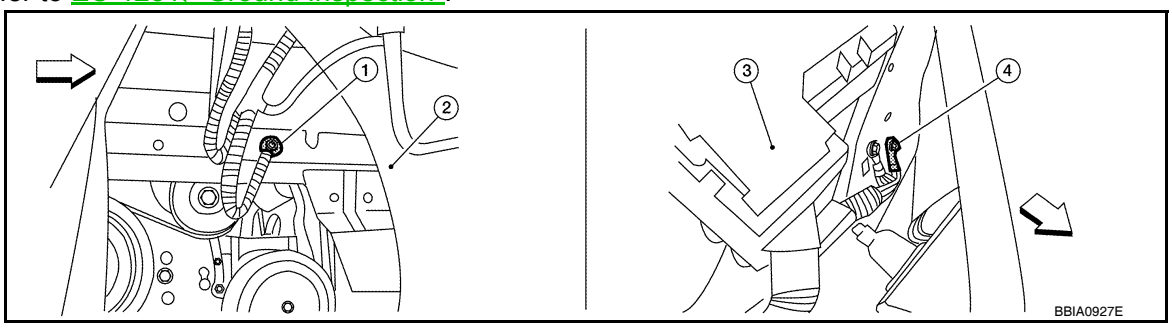

⇦: Vehicle front

1. Body ground E9 (view with front wheel RH and fender protector RH removed.)
2. Washer tank
3. Fuse and fusible link box
4. Body ground E15

OK or NG

OK >> GO TO 2.

NG >> Repair or replace ground connections.

2. CHECK ACCELERATOR PEDAL POSITION SENSOR 1 POWER SUPPLY CIRCUIT

1. Disconnect accelerator pedal position (APP) sensor (1) harness connector.
2. Turn ignition switch ON.

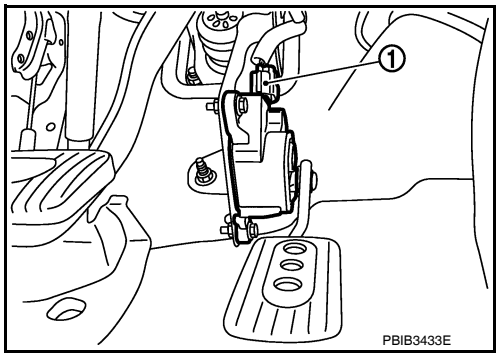

3. Check voltage between APP sensor terminal 4 and ground with CONSULT-III or tester.

Voltage: Approximately 5 V

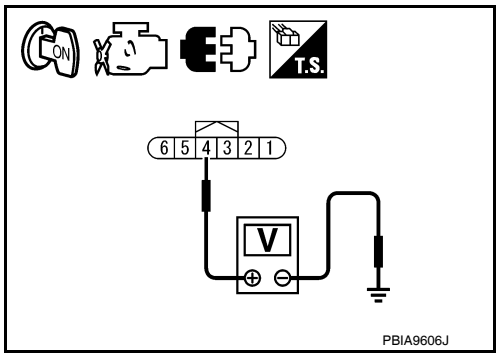

OK or NG

OK >> GO TO 7.
NG >> GO TO 3.

3. CHECK SENSOR POWER SUPPLY CIRCUITS

Check harness for short to power and short to ground, between the following terminals.

ECM terminal	Sensor terminal	Reference Wiring Diagram
47	Throttle position sensor terminal 1	EC-1614, "Wiring Diagram"
59	Camshaft position sensor (PHASE) terminal 1	EC-1432, "Wiring Diagram"
83	APP sensor terminal 4	EC-1531, "Wiring Diagram"

OK or NG

OK >> GO TO 4.
NG >> Repair short to ground or short to power in harness or connectors.

4. CHECK CAMSHAFT POSITION SENSOR (PHASE)

Refer to EC-1435, "Component Inspection".

OK or NG

OK >> GO TO 5.
NG >> Replace camshaft position sensor (PHASE).

5. CHECK THROTTLE POSITION SENSOR

Refer to EC-1617, "Component Inspection".

OK or NG

OK >> GO TO 7.
NG >> GO TO 6.

6. REPLACE ELECTRIC THROTTLE CONTROL ACTUATOR

1. Replace the electric throttle control actuator.
2. Perform EC-1193, "Throttle Valve Closed Position Learning".
3. Perform EC-1193, "Idle Air Volume Learning".

>> **INSPECTION END**

7. CHECK APP SENSOR

Refer to EC-1624, "Component Inspection".

OK or NG

OK >> GO TO 9.
NG >> GO TO 8.

8. REPLACE ACCELERATOR PEDAL ASSEMBLY

1. Replace accelerator pedal assembly.
2. Perform EC-1193, "Accelerator Pedal Released Position Learning".
3. Perform EC-1193, "Throttle Valve Closed Position Learning".
4. Perform EC-1193, "Idle Air Volume Learning".

>> **INSPECTION END**

9. CHECK INTERMITTENT INCIDENT

Refer to EC-1245.

>> **INSPECTION END**

DTC P0850 PNP SWITCH

Component Description

INFOID:0000000005286105

When the shift lever position is Neutral, park/neutral position (PNP) switch is ON. (M/T models)
When the shift lever position is P or N, transmission range switch is ON. (CVT models)
ECM detects the position because the continuity of the line (the ON signal) exists.

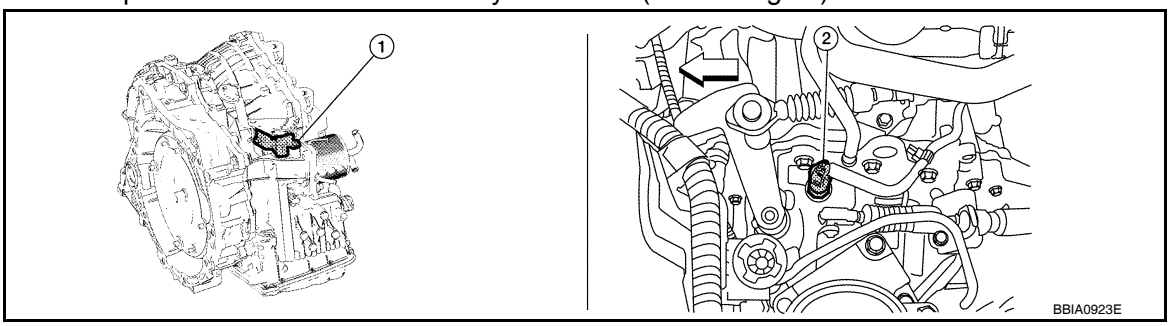

1. Transmission range switch (CVT models)
2. PNP switch (M/T models) (view with air cleaner assembly removed.)

CONSULT-III Reference Value in Data Monitor Mode

INFOID:0000000005286106

Specification data are reference values.

Monitor item	Condition		Specification
P/N POSI SW	• Ignition switch: ON	Selector lever: P or N (CVT), Neutral (M/T)	ON
		Selector lever: Except above	OFF

On Board Diagnosis Logic

INFOID:0000000005286107

DTC No.	Trouble diagnosis name	DTC detecting condition	Possible cause
P0850 0850	Park/neutral position switch	The signal of the park/neutral position (PNP) does not change during driving after the engine is started.	• Harness or connectors [Park/neutral position (PNP) signal circuit is open or shorted.] • Park/neutral position (PNP) switch (M/T) • Transmission range switch (CVT)

DTC Confirmation Procedure

INFOID:0000000005286108

CAUTION:
Always drive vehicle at a safe speed.
NOTE:
If DTC Confirmation Procedure has been previously conducted, always turn ignition switch OFF and wait at least 10 seconds before conducting the next test.

WITH CONSULT-III

1. Turn ignition switch ON.
2. Select “P/N POSI SW” in “DATA MONITOR” mode with CONSULT-III. Then check the “P/N POSI SW” signal under the following conditions.

Position (Selector lever)	Known-good signal
N or P position (CVT) Neutral position (M/T)	ON
Except above	OFF

If NG, go to EC-1538, "Diagnosis Procedure".

If OK, go to following step.

3. Select “DATA MONITOR” mode with CONSULT-III.
4. Start engine and warm it up to normal operating temperature.
5. Maintain the following conditions for at least 60 consecutive seconds.

ENG SPEED	More than 1,300 rpm
COOLAN TEMP/S	More than 70°C (158°F)
B/FUEL SCHDL	2.1 - 31.8 msec
VHCL SPEED SE	More than 64km/h (29 MPH)
Selector lever	Suitable position

6. Check 1st trip DTC.
7. If 1st trip DTC is detected, go to EC-1538, "Diagnosis Procedure".

Overall Function Check

INFOID:0000000005286109

Use this procedure to check the overall function of the park/neutral position (PNP) signal circuit. During this check, a 1st trip DTC might not be confirmed.

WITH GST

1. Turn ignition switch ON.
2. Check voltage between ECM terminal 102 (PNP signal) and ground under the following conditions.

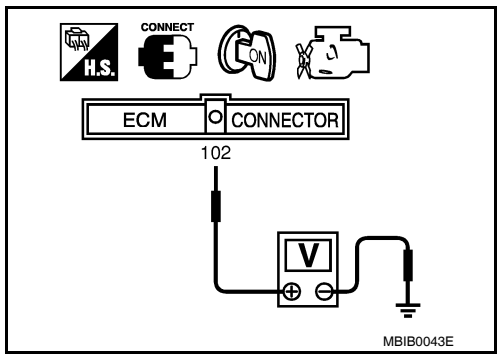

Condition (Selector lever)	Voltage (Known-good data)
P or N position (CVT) Neutral position (M/T)	Approx. 0 V
Except above	BATTERY VOLTAGE (11 - 14 V)

3. If NG, go to EC-1538, "Diagnosis Procedure".

Wiring Diagram

INFOID:0000000005286110

EC-PNP/SW-01

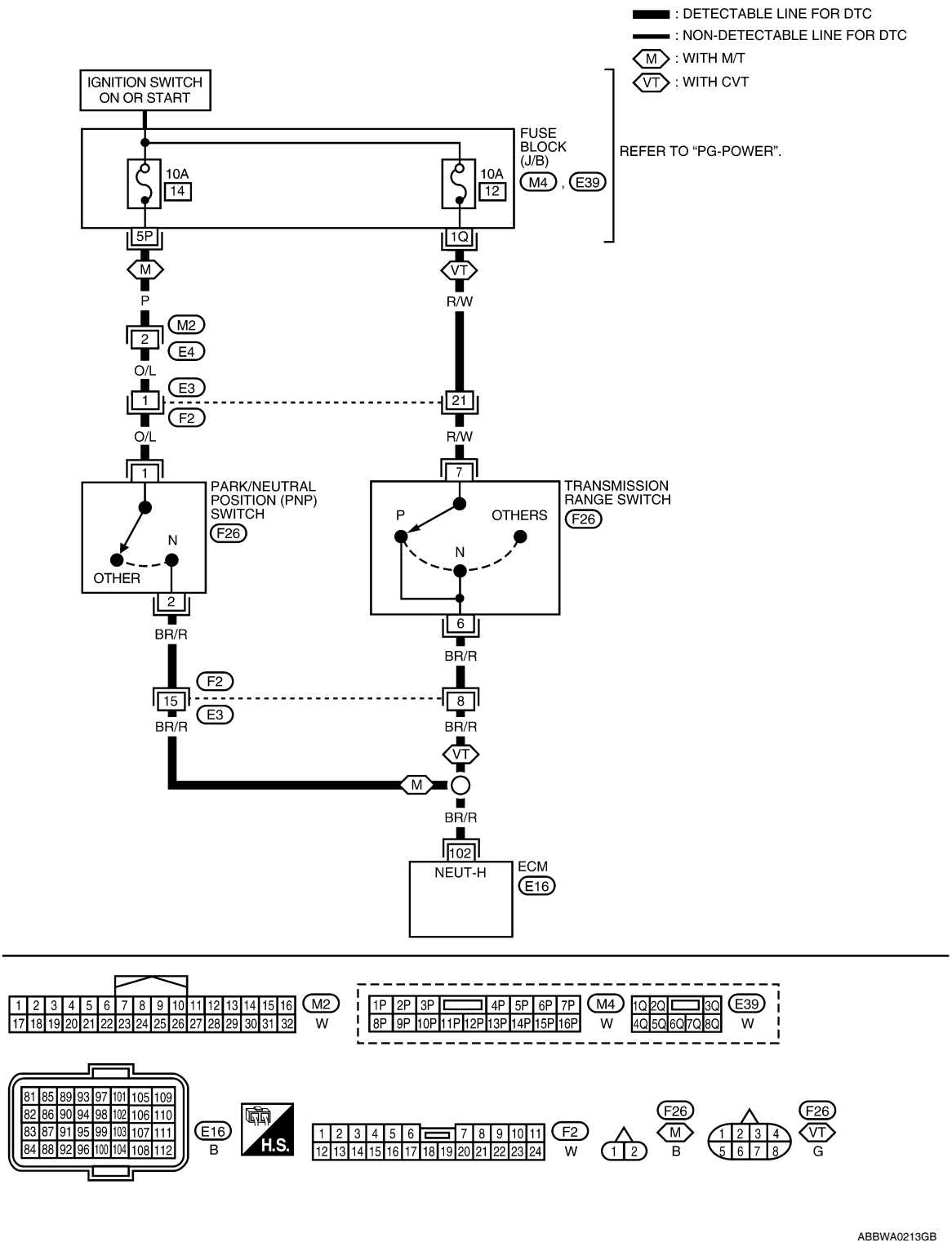

Specification data are reference values and are measured between each terminal and ground.

CAUTION:

Never use ECM ground terminals when measuring input/output voltage. Doing so may result in damage to the ECM's transistor. Use a ground other than ECM terminals, such as the ground.

TERMINAL NO.	WIRE COLOR	ITEM	CONDITION	DATA (DC Voltage)
102	BR/R	PNP signal	**[Ignition switch: ON]** • Selector lever: P or N (CVT), Neutral (M/T)	BATTERY VOLTAGE (11 - 14 V)
			[Ignition switch: ON] • Except above	Approximately 0 V

Diagnosis Procedure

INFOID:0000000005286111

M/T MODELS

1. CHECK PNP SWITCH POWER SUPPLY CIRCUIT

1. Turn ignition switch OFF.
2. Disconnect PNP switch harness connector.
3. Turn ignition switch ON.
4. Check voltage between PNP switch terminal 1 and ground with CONSULT-III or tester.

Voltage: Battery voltage

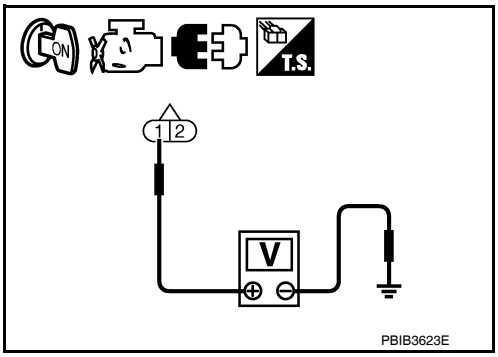

OK or NG

OK >> GO TO 3.
NG >> GO TO 2.

2. DETECT MALFUNCTIONING PART

Check the following.
- Harness connectors M2, E4
- Harness connectors E3, F2
- 10 A fuse
- Harness for open or short between PNP switch and fuse

>> Repair open circuit or short to ground or short to power in harness or connectors.

3. CHECK PNP SWITCH INPUT SIGNAL CIRCUIT FOR OPEN AND SHORT

1. Turn ignition switch OFF.
2. Disconnect ECM harness connector.
3. Check harness continuity between PNP switch terminal 2 and ECM terminal 102.
   Refer to Wiring Diagram.

Continuity should exist.

4. Also check harness for short to ground and short to power.

OK or NG

OK >> GO TO 5.
NG >> GO TO 4.

4. DETECT MALFUNCTIONING PART

Check the following.
- Harness connectors F2, E3
- Harness for open or short between PNP switch and ECM

>> Repair open circuit or short to ground or short to power in harness or connectors.

5. CHECK PNP SWITCH

Refer to MT-14.

OK or NG

OK >> GO TO 6.
NG >> Replace PNP switch.

6. CHECK INTERMITTENT INCIDENT

Refer to EC-1245.

>> **INSPECTION END**

CVT MODELS

1. CHECK TRANSMISSION RANGE SWITCH POWER SUPPLY CIRCUIT

1. Turn ignition switch OFF.
2. Disconnect transmission range switch harness connector.
3. Turn ignition switch ON.
4. Check voltage between transmission range switch terminal 7 and ground with CONSULT-III or tester.

Voltage: Battery voltage

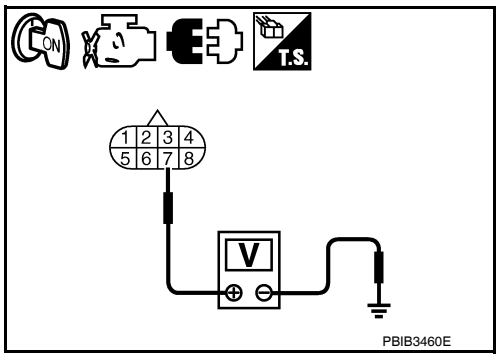

OK or NG

OK >> GO TO 3.
NG >> GO TO 2.

2. DETECT MALFUNCTIONING PART

Check the following.
- Harness connectors E3, F2
- 10 A fuse
- Harness for open or short between transmission range switch and fuse

>> Repair open circuit or short to ground or short to power in harness or connectors.

3. CHECK PNP INPUT SIGNAL CIRCUIT FOR OPEN AND SHORT

1. Turn ignition switch OFF.
2. Disconnect ECM harness connector.
3. Check harness continuity between transmission range switch terminal 6 and ECM terminal 102. Refer to Wiring Diagram.

Continuity should exist.

4. Also check harness for short to ground and short to power.

OK or NG

OK >> GO TO 5.
NG >> GO TO 4.

4. DETECT MALFUNCTIONING PART

Check the following.
- Harness connectors F2, E3
- Harness for open or short between transmission range switch and ECM

>> Repair open circuit or short to ground or short to power in harness or connectors.

5. CHECK TRANSMISSION RANGE SWITCH

Refer to CVT-60.

OK or NG

OK >> GO TO 6.
NG >> Replace transmission range switch.

6. CHECK INTERMITTENT INCIDENT

Refer to EC-1245.

>> **INSPECTION END**

DTC P1148, P1168 CLOSED LOOP CONTROL

On Board Diagnosis Logic

INFOID:0000000005286112

This self-diagnosis has the one trip detection logic.

DTC No.	Trouble diagnosis name	DTC detecting condition	Possible cause
P1148 1148 (Bank 1)	Closed loop control function	The closed loop control function for bank 1 does not operate even when vehicle is being driven in the specified condition.	• Harness or connectors [Air fuel ratio (A/F) sensor 1 circuit is open or shorted.] • Air fuel ratio (A/F) sensor 1 • Air fuel ratio (A/F) sensor 1 heater
P1168 1168 (Bank 2)		The closed loop control function for bank 2 does not operate even when vehicle is being driven in the specified condition.	

NOTE:
DTC P1148 or P1168 is displayed with another DTC for air fuel ratio (A/F) sensor 1.
Perform the trouble diagnosis for the corresponding DTC.

DTC P1212 TCS COMMUNICATION LINE

Description

INFOID:0000000005585157

NOTE:
- **If DTC P1212 is displayed with DTC U1001, first perform the trouble diagnosis for DTC U1001. Refer to EC-1256.**
- **If DTC P1212 is displayed with DTC P0607, first perform the trouble diagnosis for DTC P0607. Refer to EC-1529.**

This CAN communication line is used to control the smooth engine operation during the TCS operation. Pulse signals are exchanged between ECM and “ABS actuator and electric unit (control unit)”.
Be sure to erase the malfunction information such as DTC not only for “ABS actuator and electric unit (control unit)” but also for ECM after TCS related repair.

On Board Diagnosis Logic

INFOID:0000000005548643

Freeze frame data is not stored in the ECM for this self-diagnosis.
The MIL will not light up for this self-diagnosis.

DTC No.	Trouble diagnosis name	DTC detecting condition	Possible cause
P1212 1212	TCS communication line	ECM can not receive the information from “ABS actuator and electric unit (control unit)” continuously.	• Harness or connectors (The CAN communication line is open or shorted.) • ABS actuator and electric unit (control unit) • Dead (Weak) battery

DTC Confirmation Procedure

INFOID:0000000005548644

TESTING CONDITION:
Before performing the following procedure, confirm that battery voltage is more than 10.5 V at idle.

1. Start engine and let it idle for at least 10 seconds.
2. Check 1st trip DTC.
3. If 1st trip DTC is detected, go to EC-1542, "Diagnosis Procedure".

Diagnosis Procedure

INFOID:0000000005548645

Go to BRC-45.

DTC P1217 ENGINE OVER TEMPERATURE

System Description

INFOID:0000000005286113

SYSTEM DESCRIPTION

NOTE:
- **If DTC P1217 is displayed with DTC UXXXX, first perform the trouble diagnosis for DTC UXXXX.**
- **If DTC P1217 is displayed with DTC P0607, first perform the trouble diagnosis for DTC P0607. Refer to EC-1529.**

Cooling Fan Control

Sensor	Input Signal to ECM	ECM function	Actuator
Crankshaft position sensor (POS) Camshaft position sensor (PHASE)	Engine speed*1	Cooling fan control	• IPDM E/R (Cooling fan relays-1, -2 and -3) • Cooling fan relays-4 and -5
Battery	Battery voltage*1		
Combination meter	Vehicle speed*2		
Engine coolant temperature sensor	Engine coolant temperature		
Air conditioner switch	Air conditioner ON signal*2		
Refrigerant pressure sensor	Refrigerant pressure		

*1: The ECM determines the start signal status by the signals of engine speed and battery voltage.

*2: This signal is sent to ECM through CAN communication line.

The ECM controls the cooling fan corresponding to the vehicle speed, engine coolant temperature, refrigerant pressure, and air conditioner ON signal. The control system has 3-step control [HIGH/LOW/OFF].

Cooling Fan Operation

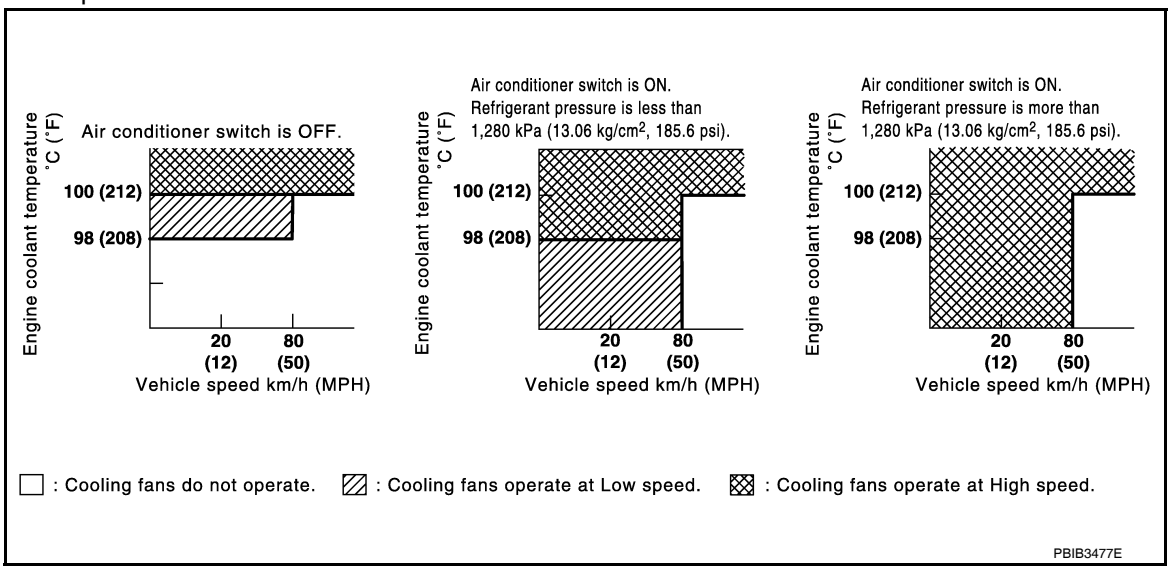

Cooling Fan Relay Operation

The ECM controls cooling fan relays through CAN communication line.

Cooling fan speed	Cooling fan relay				
	1	2	3	4	5
Stop (OFF)	OFF	OFF	OFF	OFF	OFF
Low (LOW)	OFF	OFF	OFF	ON	OFF
High (HI)	ON	ON	ON	OFF	ON

CONSULT-III Reference Value in Data Monitor Mode

INFOID:0000000005286114

Specification data are reference values.

Monitor item	Condition		Specification
AIR COND SIG	• Engine: After warming up, idle the engine	Air conditioner switch: OFF	OFF
		Air conditioner switch: ON (Compressor operates.)	ON
COOLING FAN	• Engine: After warming up, idle the engine • Air conditioner switch: OFF	Engine coolant temperature is 97°C (207°F) or less	OFF
		Engine coolant temperature is between 98°C (208°F) and 99°C (210°F)	LOW
		Engine coolant temperature is 100°C (212°F) or more	HIGH

On Board Diagnosis Logic

INFOID:0000000005286115

If the cooling fan or another component in the cooling system malfunctions, engine coolant temperature will rise. When the engine coolant temperature reaches an abnormally high temperature condition, a malfunction is indicated.
This self-diagnosis has the one trip detection logic.

DTC No.	Trouble diagnosis name	DTC detecting condition	Possible cause
P1217 1217	Engine over temperature (Overheat)	• Cooling fan does not operate properly (Overheat). • Cooling fan system does not operate properly (Overheat). • Engine coolant was not added to the system using the proper filling method. • Engine coolant is not within the specified range.	• Harness or connectors (Cooling fan circuit is open or shorted.) • Cooling fan motor • IPDM E/R (Cooling fan relays-1, -2 and -3) • Cooling fan relays-4 and -5 • Radiator hose • Radiator • Reservoir tank • Radiator cap • Water pump • Thermostat For more information, refer toEC-1553, "Main 12 Causes of Overheating".

CAUTION:
When a malfunction is indicated, always replace the coolant. Refer to MA-32, "ENGINE COOLANT : Changing Engine Coolant". Also, replace the engine oil. Refer to MA-37, "ENGINE OIL : Changing Engine Oil".

1. **Fill radiator with coolant up to specified level with a filling speed of 2 liters per minute. Always use coolant with the proper mixture ratio. Refer to MA-17, "Anti-freeze Coolant Mixture Ratio".**
2. **After refilling coolant, run engine to ensure that no water-flow noise is emitted.**

Overall Function Check

INFOID:0000000005286116

Use this procedure to check the overall function of the cooling fan. During this check, a DTC might not be confirmed.

WARNING:
Never remove the radiator cap when the engine is hot. Serious burns could be caused by high pressure fluid escaping from the reservoir tank or the radiator.
Wrap a thick cloth around cap. Carefully remove the cap by turning it a quarter turn to allow built-up pressure to escape. Then turn the cap all the way off.

WITH CONSULT-III

1. Check the coolant level in the reservoir tank and radiator.
   Allow engine to cool before checking coolant level.
   If the coolant level in the reservoir tank and/or radiator is below the proper range, skip the following steps and go to EC-1548, "Diagnosis Procedure".
2. Confirm whether customer filled the coolant or not. If customer filled the coolant, skip the following steps and go to EC-1548, "Diagnosis Procedure".
3. Turn ignition switch ON.
4. Perform “COOLING FAN” in “ACTIVE TEST” mode with CONSULT-III.
5. If the results are NG, go to EC-1548, "Diagnosis Procedure".

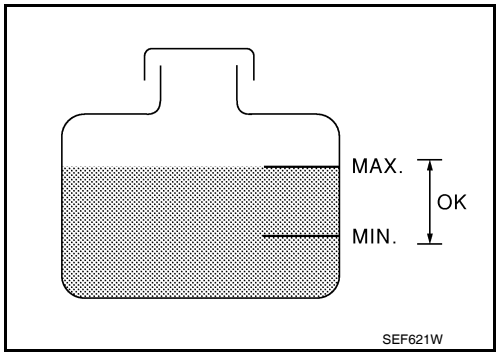

WITH GST

1. Check the coolant level in the reservoir tank and radiator.
   Allow engine to cool before checking coolant level.
   If the coolant level in the reservoir tank and/or radiator is below the proper range, skip the following steps and go to EC-1548, "Diagnosis Procedure".
2. Confirm whether customer filled the coolant or not. If customer filled the coolant, skip the following steps and go to EC-1548, "Diagnosis Procedure".
3. Perform IPDM E/R auto active test and check cooling fan motor operation. Refer to PG-20, "Auto Active Test".
4. If NG, go to EC-1548, "Diagnosis Procedure".

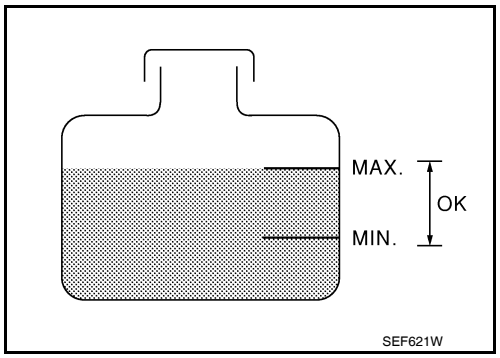

Wiring Diagram

INFOID:0000000005286117

EC-COOL/F-01

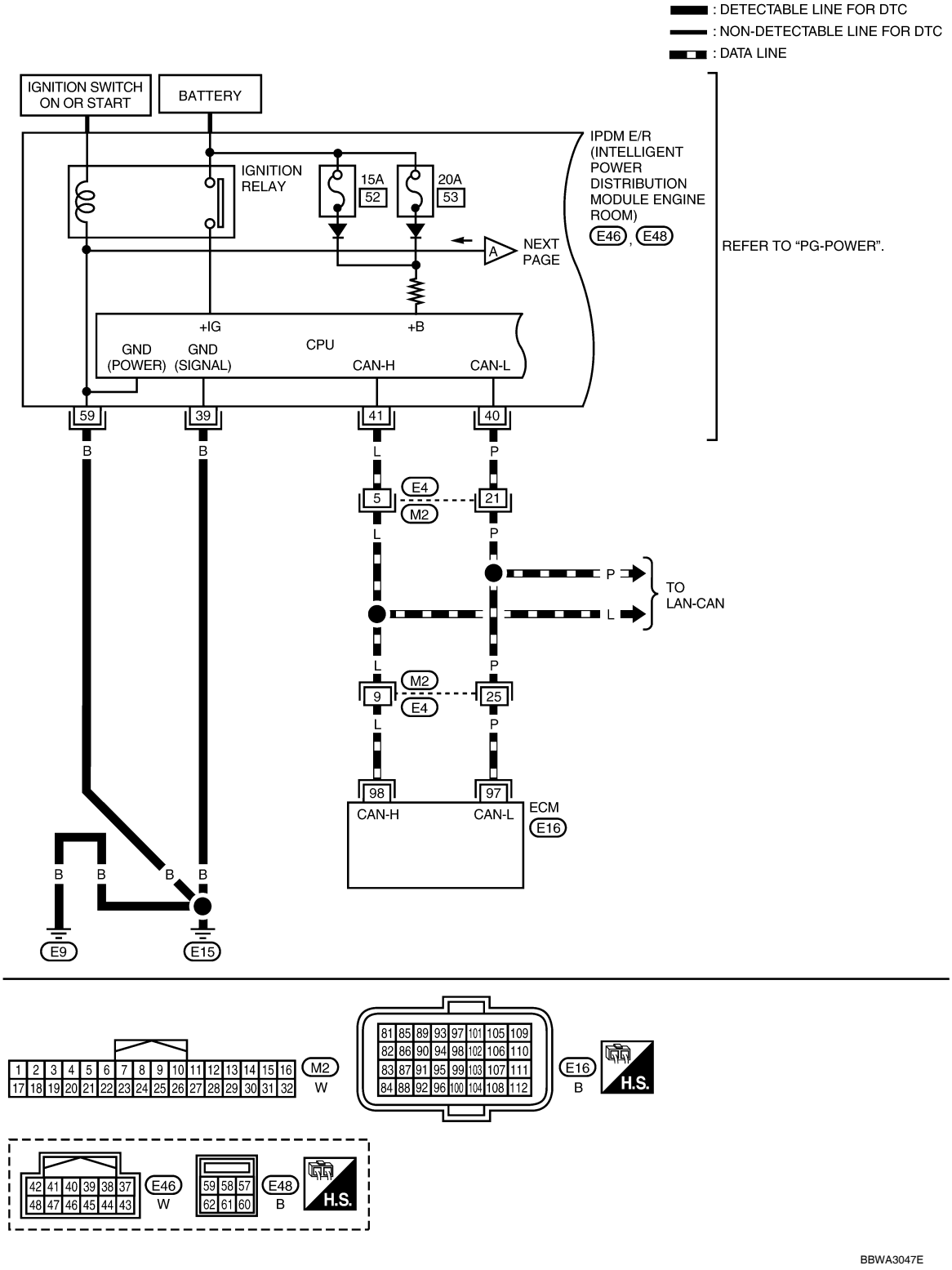

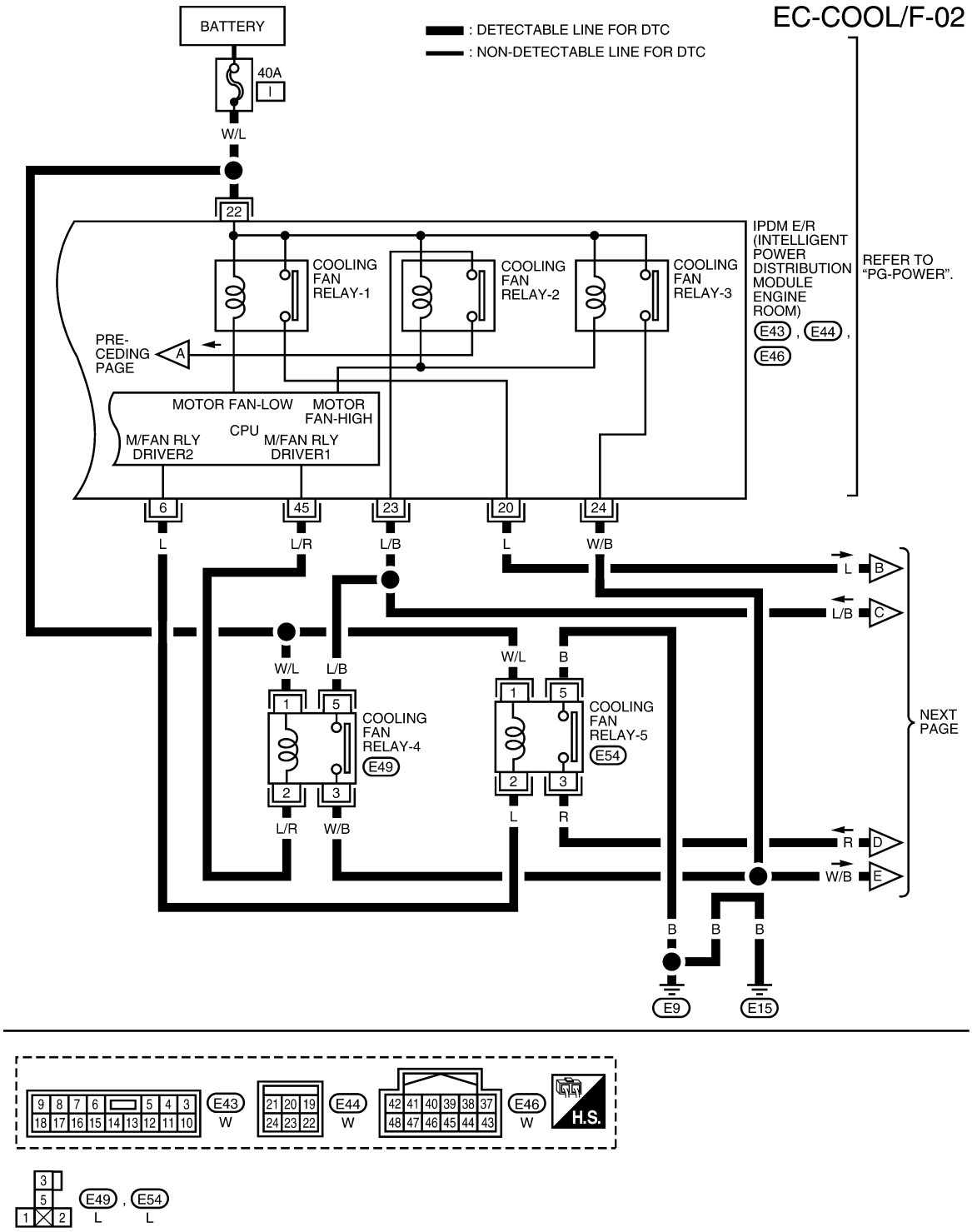
EC-COOL/F-02
: DETECTABLE LINE FOR DTC
: NON-DETECTABLE LINE FOR DTC
BATTERY
40A
I
W/L
22
IPDM E/R (INTELLIGENT POWER DISTRIBUTION MODULE ENGINE ROOM)
E43 , E44 , E46
REFER TO "PG-POWER".
COOLING FAN RELAY-1
COOLING FAN RELAY-2
COOLING FAN RELAY-3
PRE-CEDING PAGE
A
MOTOR FAN-LOW
MOTOR FAN-HIGH
CPU
M/FAN RLY DRIVER2
M/FAN RLY DRIVER1
6
45
23
20
24
L
L/R
L/B
L
W/B
B
C
W/L
L/B
COOLING FAN RELAY-4
E49
W/L
B
COOLING FAN RELAY-5
E54
L/R
W/B
L
R
D
E
NEXT PAGE
B
B
B
E9
E15
E43
W
E44
W
E46
W
H.S.
E49 , E54
L
L

BBWA3048E

EC-COOL/F-03

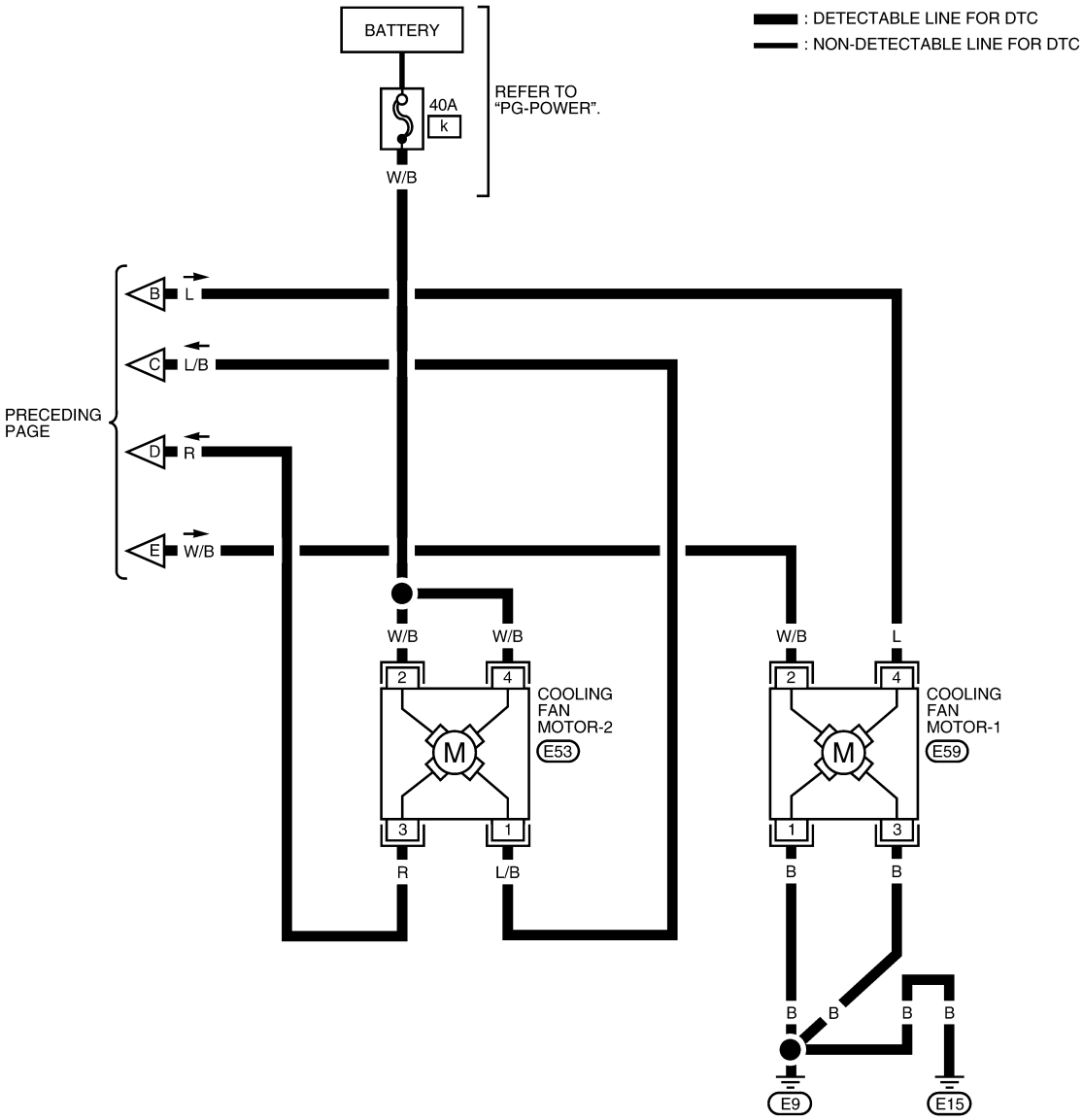

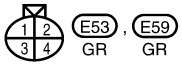

BBWA3049E

Diagnosis Procedure

INFOID:0000000005286118

1. INSPECTION START

Do you have CONSULT-III?

Yes or No

Yes >> GO TO 2.
No >> GO TO 3.

2. CHECK COOLING FAN OPERATION

With CONSULT-III

1. Turn ignition switch ON.
2. Select “COOLING FAN” in “ACTIVE TEST” mode with CONSULT-III.
3. Check that cooling fans-1 and -2 operates at each speed (LOW/HI).

OK or NG

OK >> GO TO 4.
NG >> Check cooling fan control circuit. (Refer to “PROCEDURE A”.)

3. CHECK COOLING FAN OPERATION

Without CONSULT-III

1. Perform IPDM E/R auto active test and check cooling fan motor operation.
   Refer to PG-20, "Auto Active Test".
2. Check that cooling fans-1 and -2 operates at each speed (Low/High).

OK or NG

OK >> GO TO 4.
NG >> Check cooling fan control circuit. (Refer to “PROCEDURE A”.)

4. CHECK COOLING SYSTEM FOR LEAK

Refer to CO-39.

OK or NG

OK >> GO TO 5.
NG >> Check the following for leak.
- Hose
- Radiator
- Water pump

5. CHECK RADIATOR CAP

Refer to CO-44.

OK or NG

OK >> GO TO 6.
NG >> Replace radiator cap.

6. CHECK COMPONENT PARTS

Check the following.
- Thermostat. (Refer to CO-48.)
- Engine coolant temperature sensor. (Refer to EC-1307, "Component Inspection".)

OK or NG

OK >> GO TO 7.
NG >> Replace malfunctioning component parts.

7. CHECK MAIN 13 CAUSES

If the cause cannot be isolated, go to EC-1553, "Main 12 Causes of Overheating".

>> **INSPECTION END**

PROCEDURE A

1. CHECK IPDM E/R POWER SUPPLY CIRCUIT

1. Turn ignition switch OFF.
2. Disconnect IPDM E/R harness connector E44.

3. Check voltage between IPDM E/R terminal 22 and ground with CONSULT-III or tester.

Voltage: Battery voltage

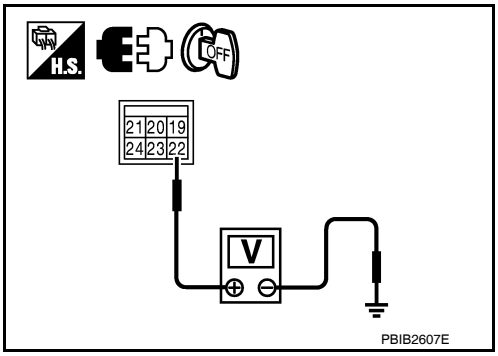

OK or NG

OK >> GO TO 3.
NG >> GO TO 2.

2. DETECT MALFUNCTIONING PART

Check the following.
- 40 A fusible link
- Harness for open or short between IPDM E/R and battery

>> Repair open circuit or short to ground or short to power in harness or connectors.

3. CHECK COOLING FAN RELAYS POWER SUPPLY CIRCUIT

1. Disconnect cooling fan relays-4 (2) and -5 (1).

- ⇦: Vehicle front

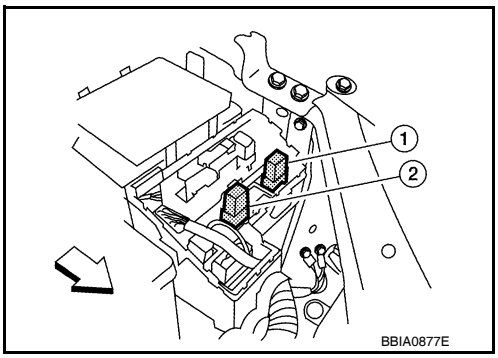

2. Check voltage between cooling fan relays-4, -5 terminal 1 and ground with CONSULT-III or tester.

Voltage: Battery voltage

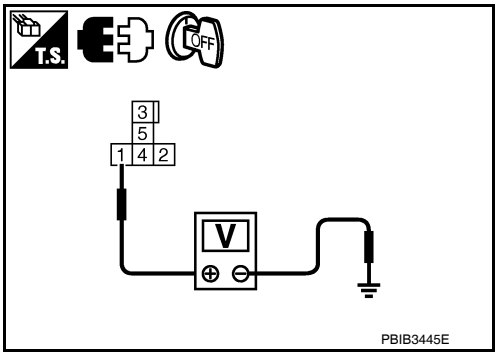

OK or NG

OK >> GO TO 5.
NG >> GO TO 4.

4. DETECT MALFUNCTIONING PART

Check the following.
- 40 A fusible link
- Harness for open or short between cooling fan relays-4, -5 and battery

>> Repair open circuit or short to ground or short to power in harness or connectors.

5. CHECK COOLING FAN MOTORS POWER SUPPLY CIRCUIT

1. Disconnect cooling fan motor-2 (2) harness connector.
- ⇦: Vehicle front
- Cooling fan motor-1 (1)

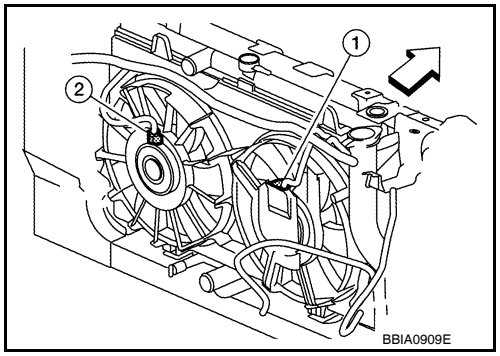

2. Check voltage between cooling fan motor-2 terminal 2, 4 and ground with CONSULT-III or tester.

Voltage: Battery voltage

OK or NG

OK >> GO TO 7.
NG >> GO TO 6.

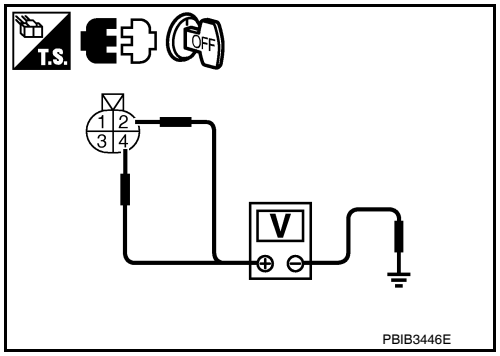

6. DETECT MALFUNCTIONING PART

Check the following.
- 40 A fusible link
- Harness for open or short between cooling fan motor-2 and battery

>> Repair open circuit or short to ground or short to power in harness or connectors.

7. CHECK COOLING FAN MOTORS CIRCUIT FOR OPEN AND SHORT

1. Turn ignition switch OFF.
2. Disconnect IPDM E/R harness connectors E43, E44 and E46.
3. Disconnect cooling fan motor-1 (1) harness connector.
- ⇦: Vehicle front
- Cooling fan motor-2 (2)
4. Check harness continuity between the following;
   cooling fan relay-4 terminal 2 and IPDM E/R terminal 45,
   cooling fan relay-4 terminal 5 and IPDM E/R terminal 23,
   cooling fan relay-5 terminal 2 and IPDM E/R terminal 6,
   cooling fan relay-5 terminal 5 and ground,
   cooling fan relay-4 terminal 3 and cooling fan motor-1 terminal 2,
   cooling fan motor-1 terminal 2 and IPDM E/R terminal 24,
   cooling fan motor-1 terminal 4 and IPDM E/R terminal 20,
   cooling fan motor-1 terminal 1, 3 and ground.
   IPDM E/R terminal 39, 59 and ground.
   cooling fan relay-4 terminal 5 and cooling fan motor-2 terminal 1,
   cooling fan relay-5 terminal 3 and cooling fan motor-2 terminal 3,
   Refer to Wiring Diagram.

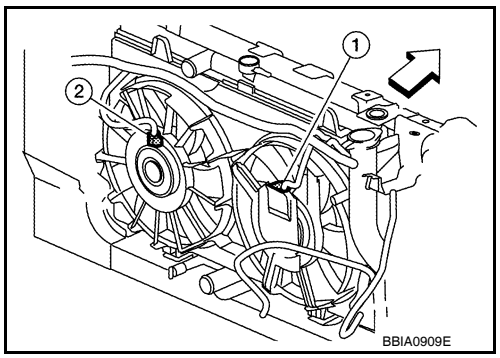

Continuity should exist.

5. Also check harness for short to ground and short to power.

OK or NG

OK >> GO TO 9.
NG >> GO TO 8.

8. DETECT MALFUNCTIONING PART

Check the following.
- Harness for open or short between cooling fan relay-4 and IPDM E/R
- Harness for open or short between cooling fan relay-5 and IPDM E/R
- Harness for open or short between cooling fan relay-4 and cooling fan motor-1
- Harness for open or short between cooling fan relay-4 and cooling fan motor-2
- Harness for open or short between cooling fan relay-5 and cooling fan motor-2
- Harness for open or short between cooling fan relay-5 and ground
- Harness for open or short between cooling fan motor-1 and ground
- Harness for open or short between IPDM E/R and ground

>> Repair open circuit or short to ground or short to power in harness or connectors.

9. CHECK GROUND CONNECTIONS

Loosen and retighten ground screw on the body.
Refer to EC-1251, "Ground Inspection".

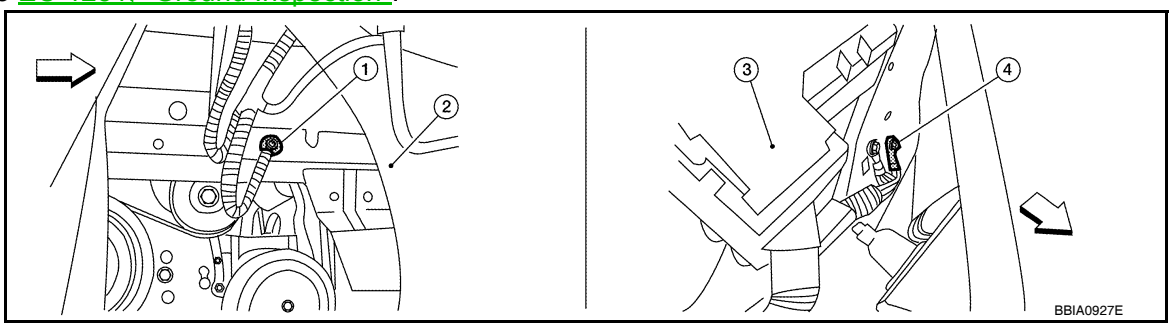

⇦: Vehicle front

1. Body ground E9 (view with front wheel RH and fender protector RH removed.)
2. Washer tank
3. Fuse and fusible link box
4. Body ground E15

OK or NG

OK >> GO TO 10.
NG >> Repair or replace ground connections.

10. CHECK COOLING FAN RELAYS-4 AND -5

Refer to EC-1553, "Component Inspection".

OK or NG

OK >> GO TO 11.
NG >> Replace malfunctioning cooling fan relay.

11. CHECK COOLING FAN MOTORS-1 AND -2

Refer to EC-1553, "Component Inspection".

OK or NG

OK >> GO TO 12.
NG >> Replace malfunctioning cooling fan motor.

12. CHECK INTERMITTENT INCIDENT

Perform EC-1245.

OK or NG

OK >> Replace IPDM E/R. Refer to PG-17.
NG >> Repair or replace harness or connector.

Main 12 Causes of Overheating

INFOID:0000000005286119

Engine	Step	Inspection item	Equipment	Standard	Reference page
OFF	1	• Blocked radiator • Blocked condenser • Blocked radiator grille • Blocked bumper	• Visual	No blocking	—
	2	• Coolant mixture	• Coolant tester	MA-17, "Anti-freeze Coolant Mixture Ratio".	
	3	• Coolant level	• Visual	Coolant up to MAX level in reservoir tank and radiator filler neck	CO-39, "Inspection".
	4	• Radiator cap	• Pressure tester	59 - 98 kPa (0.6 - 1.0 kg/cm^2, 9 - 14 psi) (Limit)	CO-39, "Inspection".
ON*2	5	• Coolant leaks	• Visual	No leaks	CO-39, "Inspection".
ON*2	6	• Thermostat	• Touch the upper and lower radiator hoses	Both hoses should be hot	CO-51.
ON*1	7	• Cooling fan	• CONSULT-III	Operating	(EC-1548, "Diagnosis Procedure").
OFF	8	• Combustion gas leak	• Color checker chemical tester 4 Gas analyzer	Negative	—
ON*3	9	• Coolant temperature gauge	• Visual	Gauge less than 3/4 when driving	—
		• Coolant overflow to reservoir tank	• Visual	No overflow during driving and idling	MA-32, "ENGINE COOLANT : Changing Engine Coolant".
OFF*4	10	• Coolant return from reservoir tank to radiator	• Visual	Should be initial level in reservoir tank	CO-39, "Inspection".
OFF	11	• Cylinder head	• Straight gauge feeler gauge	0.1 mm (0.004 in) Maximum distortion (warping)	EM-175.
	12	• Cylinder block and pistons	• Visual	No scuffing on cylinder walls or piston	EM-188.

*1: Turn the ignition switch ON.
*2: Engine running at 3,000 rpm for 10 minutes.
*3: Drive at 90 km/h (56 MPH) for 30 minutes and then let idle for 10 minutes.
*4: After 60 minutes of cool down time.
For more information, refer to CO-33.

Component Inspection

INFOID:0000000005286120

COOLING FAN MOTORS-1 AND -2

1. Disconnect cooling fan motor harness connectors.
2. Supply cooling fan motor terminals with battery voltage and check operation.

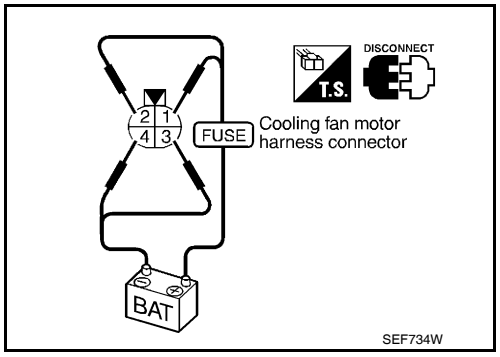

Cooling fan speed	Cooling fan motor terminals	
	(+)	(−)
Low (LO)	1	3 and 4
	2	3 and 4
High (HI)	1 and 2	3 and 4

Cooling fan motor should operate.
If NG, replace cooling fan motor.

COOLING FAN RELAYS-4 AND -5

Check continuity between terminals 3 and 4.

Conditions	Continuity
12 V direct current supply between terminal 1 and 2	Yes
No current supply	No

If NG, replace cooling fan relay.

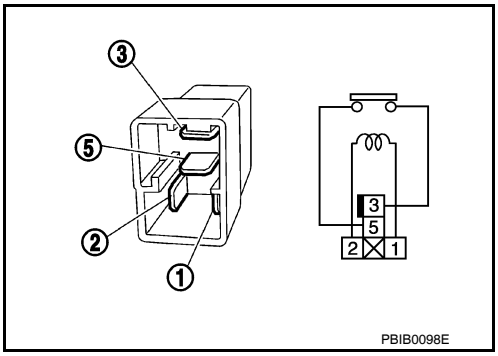

DTC P1225 TP SENSOR

Component Description

INFOID:0000000005286121

Electric throttle control actuator consists of throttle control motor, throttle position sensor, etc. The throttle position sensor responds to the throttle valve movement.
The throttle position sensor has two sensors. These sensors are a kind of potentiometers which transform the throttle valve position into output voltage, and emit the voltage signal to the ECM. The ECM judges the current opening angle of the throttle valve from these signals and controls the throttle valve opening signal in response to driving conditions via the throttle control motor.

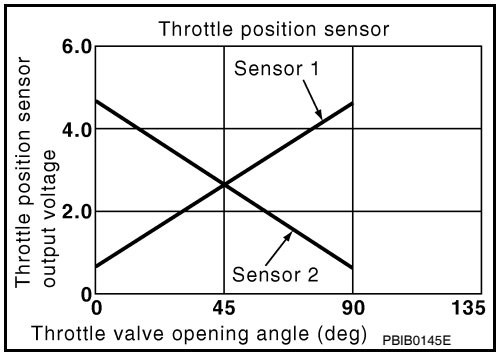

On Board Diagnosis Logic

INFOID:0000000005286122

The MIL will not illuminate for this self-diagnosis.

DTC No.	Trouble diagnosis name	DTC detecting condition	Possible cause
P1225 1225	Closed throttle position learning performance	Closed throttle position learning value is excessively low.	• Electric throttle control actuator (TP sensor 1 and 2)

DTC Confirmation Procedure

INFOID:0000000005286123

NOTE:
If DTC Confirmation Procedure has been previously conducted, always turn ignition switch OFF and wait at least 10 seconds before conducting the next test.
TESTING CONDITION:
Before performing the following procedure, confirm that battery voltage is more than 10 V at idle.

1. Turn ignition switch OFF and wait at least 10 seconds.
2. Turn ignition switch ON.
3. Check 1st trip DTC.
4. If 1st trip DTC is detected, go to EC-1555, "Diagnosis Procedure".

Diagnosis Procedure

INFOID:0000000005286124

1. CHECK ELECTRIC THROTTLE CONTROL ACTUATOR VISUALLY

1. Turn ignition switch OFF.
2. Remove the intake air duct.
3. Check if foreign matter is caught between the throttle valve (1) and the housing.

- ⇦: Vehicle front
- Electric throttle control actuator (2)

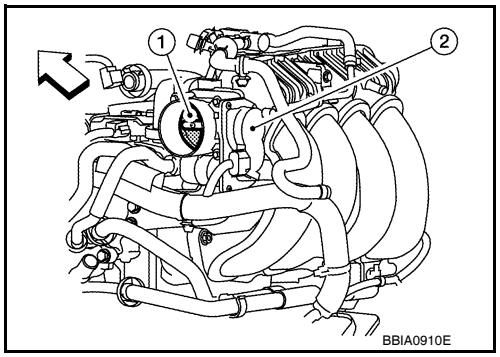

OK or NG

OK >> GO TO 2.
NG >> Remove the foreign matter and clean the electric throttle control actuator inside.

2. REPLACE ELECTRIC THROTTLE CONTROL ACTUATOR

1. Replace the electric throttle control actuator.
2. Perform EC-1193, "Throttle Valve Closed Position Learning".
3. Perform EC-1193, "Idle Air Volume Learning".

>> **INSPECTION END**

Removal and Installation

INFOID:0000000005286125

ELECTRIC THROTTLE CONTROL ACTUATOR
Refer to EM-135.

DTC P1226 TP SENSOR

Component Description

INFOID:0000000005286126

Electric throttle control actuator consists of throttle control motor, throttle position sensor, etc. The throttle position sensor responds to the throttle valve movement.
The throttle position sensor has two sensors. These sensors are a kind of potentiometers which transform the throttle valve position into output voltage, and emit the voltage signal to the ECM. The ECM judges the current opening angle of the throttle valve from these signals and controls the throttle valve opening signal in response to driving conditions via the throttle control motor.

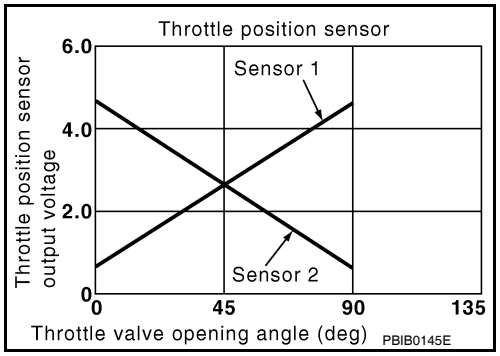

On Board Diagnosis Logic

INFOID:0000000005286127

The MIL will not illuminate for this self-diagnosis.

DTC No.	Trouble diagnosis name	DTC detecting condition	Possible cause
P1226 1226	Closed throttle position learning performance	Closed throttle position learning is not performed successfully, repeatedly.	• Electric throttle control actuator (TP sensor 1 and 2)

DTC Confirmation Procedure

INFOID:0000000005286128

NOTE:
If DTC Confirmation Procedure has been previously conducted, always turn ignition switch OFF and wait at least 10 seconds before conducting the next test.
TESTING CONDITION:
Before performing the following procedure, confirm that battery voltage is more than 10 V at idle.

1. Turn ignition switch OFF and wait at least 10 seconds.
2. Turn ignition switch ON.
3. Repeat steps 1 and 2 for 32 times.
4. Check 1st trip DTC.
5. If 1st trip DTC is detected, go to EC-1557, "Diagnosis Procedure".

Diagnosis Procedure

INFOID:0000000005286129

1. CHECK ELECTRIC THROTTLE CONTROL ACTUATOR VISUALLY

1. Turn ignition switch OFF.
2. Remove the intake air duct.
3. Check if foreign matter is caught between the throttle valve (1) and the housing.

- ⇦: Vehicle front
- Electric throttle control actuator (2)

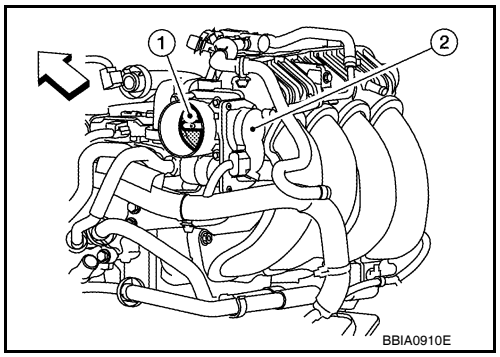

OK or NG

OK >> GO TO 2.
NG >> Remove the foreign matter and clean the electric throttle control actuator inside.

2. REPLACE ELECTRIC THROTTLE CONTROL ACTUATOR

1. Replace the electric throttle control actuator.
2. Perform EC-1193, "Throttle Valve Closed Position Learning".
3. Perform EC-1193, "Idle Air Volume Learning".

>> **INSPECTION END**

Removal and Installation

INFOID:0000000005286130

ELECTRIC THROTTLE CONTROL ACTUATOR
Refer to EM-135.

DTC P1421 COLD START CONTROL

Description

INFOID:0000000005286131

ECM controls ignition timing and engine idle speed when engine is started with pre-warming up condition. This control promotes the activation of three way catalyst by heating the catalyst and reduces emissions.

On Board Diagnosis Logic

INFOID:0000000005286132

DTC No.	Trouble diagnosis name	DTC detecting condition	Possible cause
P1421 1421	Cold start emission reduction strategy monitoring	ECM does not control ignition timing and engine idle speed properly when engine is started with pre-warming up condition.	• Lack of intake air volume • Fuel injection system • ECM

DTC Confirmation Procedure

INFOID:0000000005286133

NOTE:
- If DTC Confirmation Procedure has been previously conducted, always turn ignition switch OFF and wait at least 10 seconds before conducting the next test.
- **If DTC P1421 is displayed with other DTC, first perform the trouble diagnosis for other DTC.**

TESTING CONDITION:
Before performing the following procedure, confirm that battery voltage is more than 11 V at idle.

WITH CONSULT-III

1. Turn ignition switch OFF and wait at least 10 seconds.
2. Turn ignition switch ON.
3. Select “DATA MONITOR” mode with CONSULT-III.
4. Check that the “COOLAN TEMP/S” indication is between 4°C (39°F) and 36°C (97°F).
   If “COOLAN TEMP/S” indication is within the specified value, go to the following step.
   If “COOLAN TEMP/S” indication is out of the specified value, cool engine down or warm engine up and go to step 1.
5. Start engine and let it idle for 5 minutes.
6. Check 1st trip DTC.
7. If 1st trip DTC is detected, go to EC-1559, "Diagnosis Procedure".

WITH GST

Follow the procedure “WITH CONSULT-III” above.

Diagnosis Procedure

INFOID:0000000005286134

1. PERFORM IDLE AIR VOLUME LEARNING

Perform EC-1193, "Idle Air Volume Learning".
Is Idle Air Volume Learning carried out successfully?

Yes or No

Yes >> GO TO 2.
No >> Follow the instruction of Idle Air Volume Learning.

2. CHECK INTAKE SYSTEM

Check for the cause of intake air volume lacking. Refer to the following.
- Crushed intake air passage
- Intake air passage clogging

OK or NG

OK >> GO TO 3.
NG >> Repair or replace malfunctioning part

3. CHECK FUEL INJECTION SYSTEM FUNCTION

Perform EC-1385, "DTC Confirmation Procedure" for DTC P0171, P0174.

OK or NG

OK >> GO TO 4.
NG >> Go to EC-1390, "Diagnosis Procedure" for DTC P0171, P0174.

4. PERFORM DTC CONFIRMATION PROCEDURE

1. Erase DTC.
2. **Perform DTC Confirmation Procedure.**
   See EC-1559, "DTC Confirmation Procedure".
3. Is the 1st trip DTC P1421 displayed again?

Yes or No

Yes >> GO TO 5.
No >> **INSPECTION END**

5. REPLACE ECM

1. Replace ECM.
2. Perform initialization of NVIS (NATS) system and registration of all NVIS (NATS) ignition key IDs.
   Refer to BL-171, "ECM Re-communicating Function".
3. Perform EC-1193, "VIN Registration".
4. Perform EC-1193, "Accelerator Pedal Released Position Learning".
5. Perform EC-1193, "Throttle Valve Closed Position Learning".
6. Perform EC-1193, "Idle Air Volume Learning".

>> **INSPECTION END**

DTC P1564 ASCD STEERING SWITCH

Component Description

INFOID:0000000005286135

ASCD steering switch has variant values of electrical resistance for each button. ECM reads voltage variation of switch, and determines which button is operated.

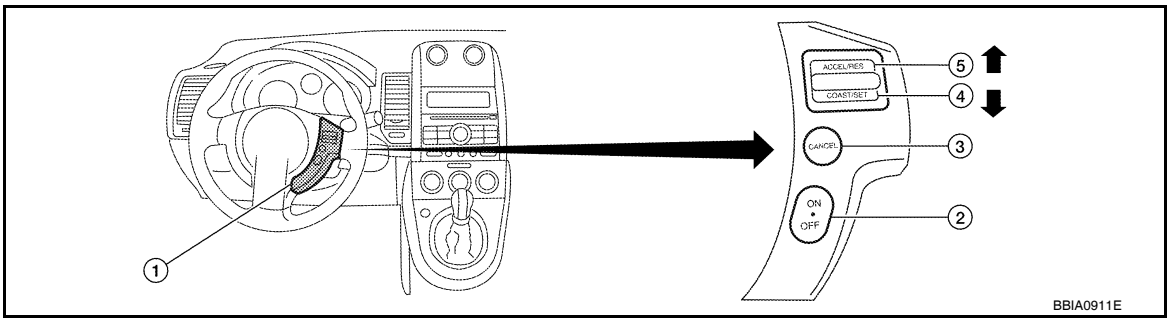

1. ASCD steering switch
2. MAIN switch
3. CANCEL switch
4. SET/COAST switch
5. RESUME/ACCELERATE switch

Refer to EC-1135 for the ASCD function.

CONSULT-III Reference Value in Data Monitor Mode

INFOID:0000000005286136

Specification data are reference values.

Monitor item	Condition		Specification
MAIN SW	• Ignition switch: ON	MAIN switch: Pressed	ON
		MAIN switch: Released	OFF
CANCEL SW	• Ignition switch: ON	CANCEL switch: Pressed	ON
		CANCEL switch: Released	OFF
RESUME/ACC SW	• Ignition switch: ON	RESUME/ACCELERATE switch: Pressed	ON
		RESUME/ACCELERATE switch: Released	OFF
SET SW	• Ignition switch: ON	SET/COAST switch: Pressed	ON

On Board Diagnosis Logic

INFOID:0000000005286137

- **This self-diagnosis has the one trip detection logic.**
- **The MIL will not illuminate for this self-diagnosis.**

NOTE:
If DTC P1564 is displayed with DTC P0605, first perform the trouble diagnosis for DTC P0605. Refer to EC-1527.

DTC No.	Trouble Diagnosis Name	DTC Detecting Condition	Possible Cause
P1564 1564	ASCD steering switch	• An excessively high voltage signal from the ASCD steering switch is sent to ECM. • ECM detects that input signal from the ASCD steering switch is out of the specified range. • ECM detects that the ASCD steering switch is stuck ON.	• Harness or connectors (ASCD switch circuit is open or shorted.) • ASCD steering switch • ECM

DTC Confirmation Procedure

INFOID:0000000005286138

NOTE:

If DTC Confirmation Procedure has been previously conducted, always turn ignition switch OFF and wait at least 10 seconds before conducting the next test.

1. Turn ignition switch ON.
2. Wait at least 10 seconds.
3. Press MAIN switch for at least 10 seconds, then release it and wait at least 10 seconds.
4. Press CANCEL switch for at least 10 seconds, then release it and wait at least 10 seconds.
5. Press RESUME/ACCELERATE switch for at least 10 seconds, then release it and wait at least 10 seconds.
6. Press SET/COAST switch for at least 10 seconds, then release it and wait at least 10 seconds.
7. Check DTC.
8. If DTC is detected, go to EC-1564, "Diagnosis Procedure".

Wiring Diagram

INFOID:0000000005286139

EC-ASC/SW-01

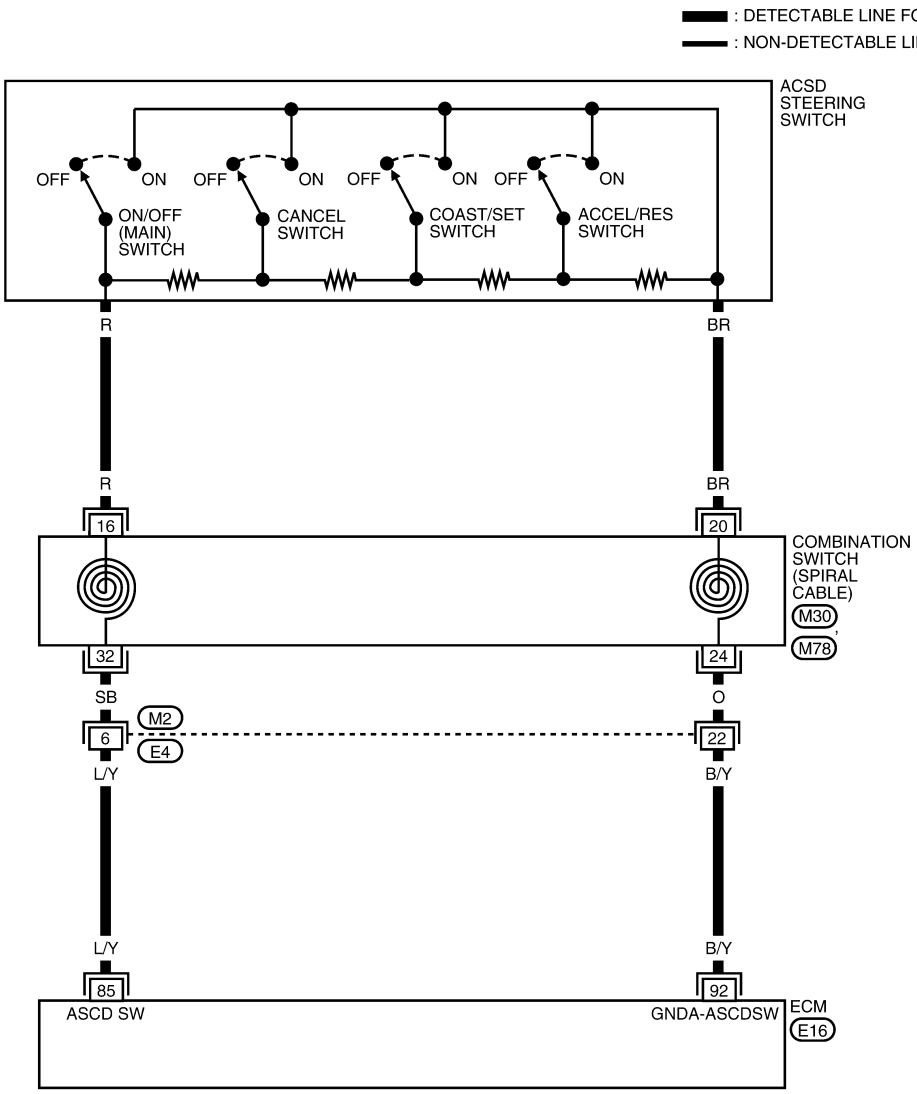

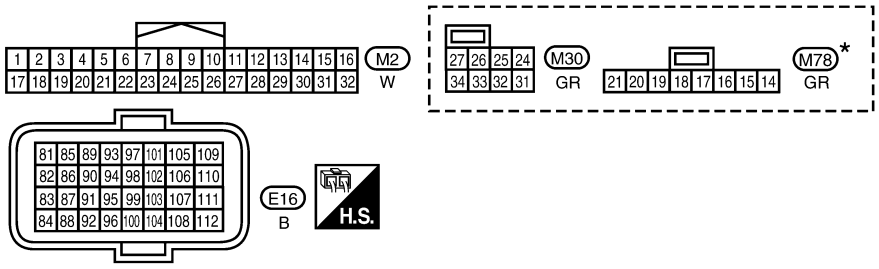

*: THIS CONNECTOR IS NOT SHOWN IN "HARNESS LAYOUT" OF PG SECTION.

BBWA3050E

Specification data are reference values and are measured between each terminal and ground.

CAUTION:

Never use ECM ground terminals when measuring input/output voltage. Doing so may result in damage to the ECM's transistor. Use a ground other than ECM terminals, such as the ground.

TERMINAL NO.	WIRE COLOR	ITEM	CONDITION	DATA (DC Voltage)
85	L/Y	ASCD steering switch	**[Ignition switch: ON]** • ASCD steering switch: OFF	Approximately 4 V
			[Ignition switch: ON] • MAIN switch: Pressed	Approximately 0 V
			[Ignition switch: ON] • CANCEL switch: Pressed	Approximately 1 V
			[Ignition switch: ON] • RESUME/ACCELERATE switch: Pressed	Approximately 3 V
			[Ignition switch: ON] • SET/COAST switch: Pressed	Approximately 2 V
92	B/Y	Sensor ground	**[Engine is running]** • **Warm-up condition** • Idle speed	Approximately 0 V

Diagnosis Procedure

INFOID:0000000005286140

1. CHECK GROUND CONNECTIONS

1. Turn ignition switch OFF.
2. Loosen and retighten ground screws on the body.
   Refer to EC-1251, "Ground Inspection".

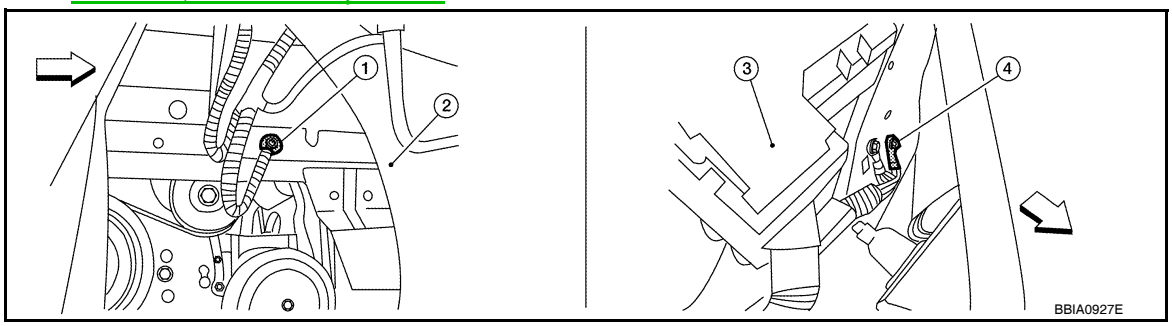

⇦: Vehicle front

1. Body ground E9 (view with front wheel RH and fender protector RH removed.)
2. Washer tank
3. Fuse and fusible link box
4. Body ground E15

OK or NG

OK >> GO TO 2.
NG >> Repair or replace ground connections.

2. CHECK ASCD STEERING SWITCH CIRCUIT

With CONSULT-III

1. Turn ignition switch ON.
2. Select “MAIN SW”, “RESUME/ACC SW”, “SET SW and “CANCEL SW” in “DATA MONITOR” mode with CONSULT-III.
3. Check each item indication under the following conditions.

Switch	Monitor item	Condition	Indication
MAIN switch	MAIN SW	Pressed	ON
		Released	OFF
CANCEL switch	CANCEL SW	Pressed	ON
		Released	OFF

Switch	Monitor item	Condition	Indication
RESUME/ACCELERATE switch	RESUME/ACC SW	Pressed	ON
		Released	OFF
SET/COAST switch	SET SW	Pressed	ON
		Released	OFF

Without CONSULT-III

1. Turn ignition switch ON.
2. Check voltage between ECM terminal 85 and ground with pressing each button.

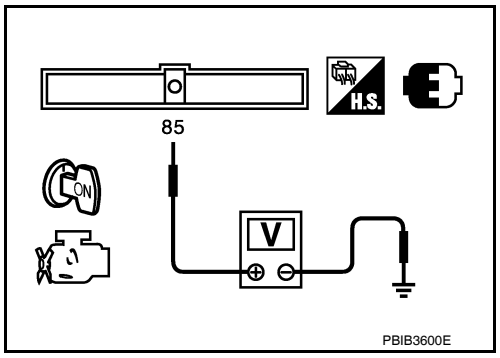

Switch	Condition	Voltage (V)
MAIN switch	Pressed	Approx. 0
	Released	Approx. 4.0
CANCEL switch	Pressed	Approx. 1.0
	Released	Approx. 4.0
RESUME/ACCELERATE switch	Pressed	Approx. 3.0
	Released	Approx. 4.0
SET/COAST switch	Pressed	Approx. 2.0
	Released	Approx. 4.0

OK or NG

OK >> GO TO 8.
NG >> GO TO 3.

3. CHECK ASCD STEERING SWITCH GROUND CIRCUIT FOR OPEN AND SHORT

1. Turn ignition switch OFF.
2. Disconnect combination switch harness connector M78.
3. Disconnect ECM harness connector.
4. Check harness continuity between combination switch terminal 20 (unit side) and ECM terminal 92. Refer to Wiring Diagram.

Continuity should exist.

5. Also check harness for short to ground or short to power.

OK or NG

OK >> GO TO 5.
NG >> GO TO 4.

4. DETECT MALFUNCTIONING PART

Check the following.
- Harness connectors M2, E4
- Combination switch (spiral cable)
- Harness for open and short between ECM and combination switch

>> Repair open circuit or short to ground or short to power in harness or connectors.

5. CHECK ASCD STEERING SWITCH INPUT SIGNAL CIRCUIT FOR OPEN AND SHORT

1. Check harness continuity between ECM terminal 85 and combination switch terminal 16. Refer to Wiring Diagram.

Continuity should exist.

2. Also check harness for short to ground and short to power.

OK or NG

OK >> GO TO 7.
NG >> GO TO 6.

6. DETECT MALFUNCTIONING PART

Check the following.
- Harness connectors M2, E4
- Combination switch (spiral cable)
- Harness for open and short between ECM and combination switch

>> Repair open circuit or short to ground or short to power in harness or connectors.

7. CHECK ASCD STEERING SWITCH

Refer to EC-1566, "Component Inspection".

OK or NG

OK >> GO TO 8.
NG >> Replace ASCD steering switch.

8. CHECK INTERMITTENT INCIDENT

Refer to EC-1245.

>> **INSPECTION END**

Component Inspection

INFOID:0000000005286141

ASCD STEERING SWITCH

1. Disconnect combination switch (spiral cable) harness connector M78.
2. Check continuity between combination switch (spiral cable) terminals 16 and 20 with pushing each switch.

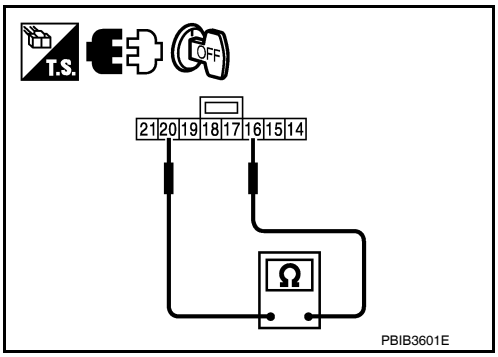

Switch	Condition	Resistance [Ω]
MAIN switch	Pressed	Approx. 0
	Released	Approx. 4,000
CANCEL switch	Pressed	Approx. 250
	Released	Approx. 4,000
RESUME/ACCELERATE switch	Pressed	Approx. 1,480
	Released	Approx. 4,000
SET/COAST switch	Pressed	Approx. 660
	Released	Approx. 4,000

If NG, replace ASCD steering switch.

DTC P1572 ASCD BRAKE SWITCH

Component Description

INFOID:0000000005286142

When the brake pedal is depressed, ASCD brake switch (1) is turned OFF and stop lamp switch (2) is turned ON. ECM detects the state of the brake pedal (3) by those two types of input (ON/OFF signal). Refer to EC-1135 for the ASCD function.

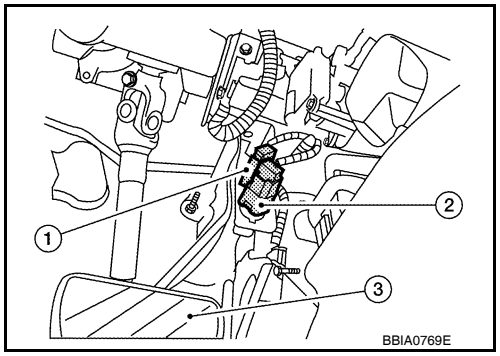

CONSULT-III Reference Value in Data Monitor Mode

INFOID:0000000005286143

Specification data are reference values.

Monitor item	Condition		Specification
BRAKE SW1 (ASCD brake switch)	• Ignition switch: ON	• Brake pedal: Fully released (CVT) • Brake peal and clutch pedal: Fully released (M/T)	ON
		• Brake pedal: Slightly depressed (CVT) • Brake peal and/or clutch pedal: Slightly depressed (M/T)	OFF
BRAKE SW2 (Stop lamp switch)	• Ignition switch: ON	Brake pedal: Fully released	OFF
		Brake pedal: Slightly depressed	ON

On Board Diagnosis Logic

INFOID:0000000005286144

- **This self-diagnosis has the one trip detection logic.**
- **The MIL will not illuminate for this self-diagnosis.**

NOTE:

- **If DTC P1572 is displayed with DTC P0605, first perform the trouble diagnosis for DTC P0605. Refer to EC-1527.**
- **This self-diagnosis has the one trip detection logic. When malfunction A is detected, DTC is not stored in ECM memory. And in that case, 1st trip DTC and 1st trip freeze frame data are displayed. 1st trip DTC is erased when ignition switch is turned OFF. And even when malfunction A is detected in two consecutive trips, DTC is not stored in ECM memory.**

DTC No.	Trouble Diagnosis Name	DTC Detecting Condition		Possible Cause
P1572 1572	ASCD brake switch	A)	When the vehicle speed is above 30km/h (19 MPH), ON signals from the stop lamp switch and the ASCD brake switch are sent to ECM at the same time.	• Harness or connectors (Stop lamp switch circuit is shorted.) • Harness or connectors (ASCD brake switch circuit is shorted.) • Harness or connectors (ASCD clutch switch circuit is shorted.) (M/T) • Stop lamp switch • ASCD brake switch • ASCD clutch switch (M/T) • Incorrect stop lamp switch installation • Incorrect ASCD brake switch installation • Incorrect ASCD clutch switch installation (M/T) • ECM
		B)	ASCD brake switch signal is not sent to ECM for extremely long time while the vehicle is being driven	

DTC Confirmation Procedure

INFOID:0000000005286145

CAUTION:
Always drive vehicle at a safe speed.
NOTE:
- If DTC Confirmation Procedure has been previously conducted, always turn ignition switch OFF and wait at least 10 seconds before conducting the next test.
- The procedure for malfunction B is not described. It takes the extremely long time to complete the procedure for malfunction B. By performing the procedure for malfunction A, the condition that causes malfunction B can be detected.

TESTING CONDITION:
Steps 4 and 5 may be conducted with the drive wheels lifted in the shop or by driving the vehicle. If a road test is expected to be easier, it is unnecessary to lift the vehicle.

WITH CONSULT-III

1. Start engine.
2. Select “DATA MONITOR” mode with CONSULT-III.
3. Press MAIN switch and check that CRUISE indicator illuminates.
4. Drive the vehicle for at least 5 consecutive seconds under the following condition.

VHCL SPEED SE	More than 30 km/h (19 MPH)
Selector lever	Suitable position

5. Check 1st trip DTC.
   If 1st trip DTC is detected, go to EC-1570, "Diagnosis Procedure".
   If 1st trip DTC is not detected, go to the following step.
6. Drive the vehicle for at least 5 consecutive seconds under the following condition.

VHCL SPEED SE	More than 30 km/h (19 MPH)
Selector lever	Suitable position
Driving location	Depress the brake pedal for more than 5 seconds so as not to come off from the above-mentioned vehicle speed.

7. Check 1st trip DTC.
8. If 1st trip DTC is detected, go to EC-1570, "Diagnosis Procedure".

WITH GST

Follow the procedure “WITH CONSULT-III” above.

Wiring Diagram

INFOID:0000000005286146

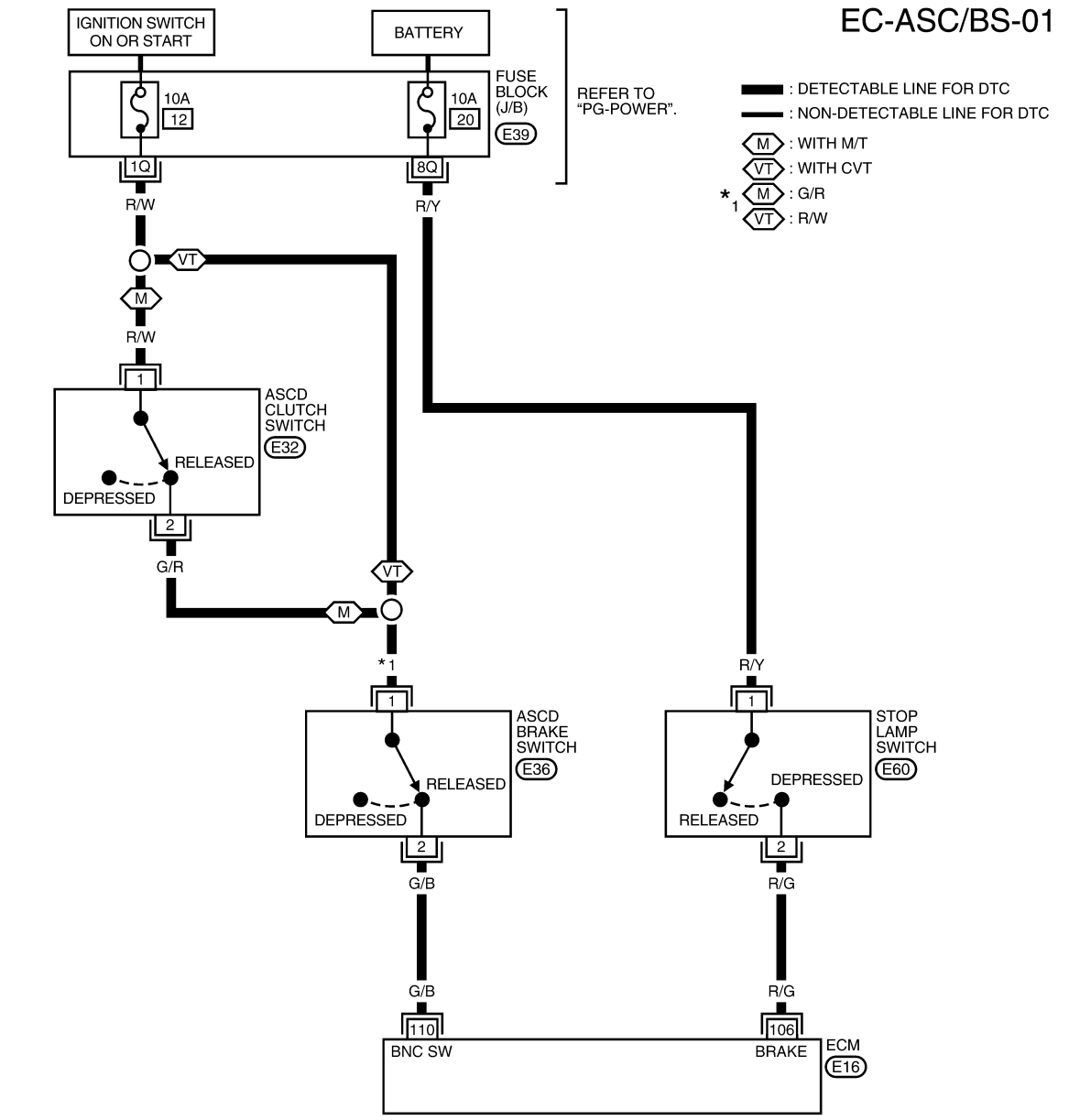

Specification data are reference values and are measured between each terminal and ground.

CAUTION:

Never use ECM ground terminals when measuring input/output voltage. Doing so may result in damage to the ECM's transistor. Use a ground other than ECM terminals, such as the ground.

TERMINAL NO.	WIRE COLOR	ITEM	CONDITION	DATA (DC Voltage)
106	R/G	Stop lamp switch	**[Ignition switch: ON]** • Brake pedal: Fully released	Approximately 0 V
			[Ignition switch: ON] • Brake pedal: Slightly depressed	BATTERY VOLTAGE (11 - 14 V)
110	G/B	ASCD brake switch	• Brake pedal: Slightly depressed (CVT) • Brake pedal and clutch pedal: Fully released (M/T)	BATTERY VOLTAGE (11 - 14 V)
			• Brake pedal: Slightly depressed (CVT) • Brake pedal and/or clutch pedal: Slightly depressed (M/T)	Approximately 0 V

Diagnosis Procedure

INFOID:0000000005286147

1. CHECK OVERALL FUNCTION-I

With CONSULT-III

1. Turn ignition switch ON.
2. Select “BRAKE SW1” in “DATA MONITOR” mode with CONSULT-III.
3. Check “BRAKE SW1” indication under the following conditions.

M/T models

Condition	Indication
Clutch pedal and/or brake pedal: Slightly depressed	OFF
Clutch pedal and brake pedal: Fully released	ON

CVT models

Condition	Indication
Brake pedal: Slightly depressed	OFF
Brake pedal: Fully released	ON

Without CONSULT-III

1. Turn ignition switch ON.
2. Check voltage between ECM terminal 110 and ground under the following conditions.

M/T models

Condition	Voltage
Clutch pedal and/or brake pedal: Slightly depressed	Approximately 0 V
Clutch pedal and brake pedal: Fully released	Battery voltage

CVT models

Condition	Voltage
Brake pedal: Slightly depressed	Approximately 0 V
Brake pedal: Fully released	Battery voltage

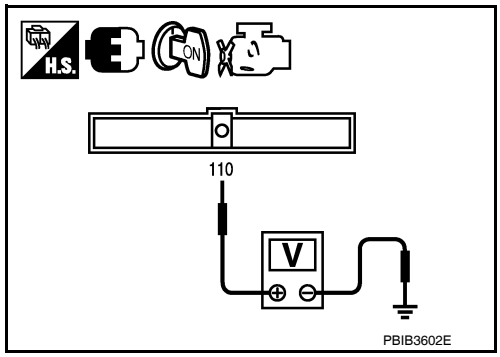

OK or NG

OK >> GO TO 2.
NG >> GO TO 3.

2. CHECK OVERALL FUNCTION-II

With CONSULT-III

Check “BRAKE SW2” indication in “DATA MONITOR” mode.

Condition	Indication
Brake pedal: Fully released	OFF
Brake pedal: Slightly depressed	ON

Without CONSULT-III

Check voltage between ECM terminal 106 and ground under the following conditions.

Condition	Voltage
Brake pedal: Fully released	Approximately 0 V
Brake pedal: Slightly depressed	Battery voltage

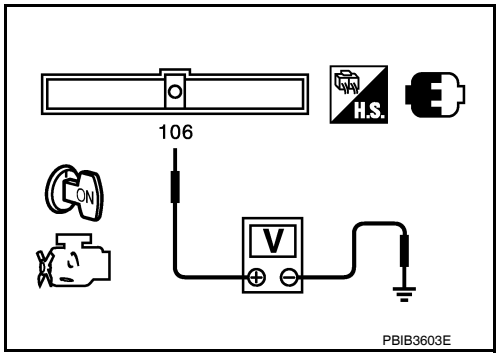

OK or NG

OK >> GO TO 15.
NG >> GO TO 11.

3. CHECK ASCD BRAKE SWITCH POWER SUPPLY

1. Turn ignition switch OFF.
2. Disconnect ASCD brake switch (1) harness connector.
- Stop lamp switch (2)
- Brake pedal (3)
3. Turn ignition switch ON.

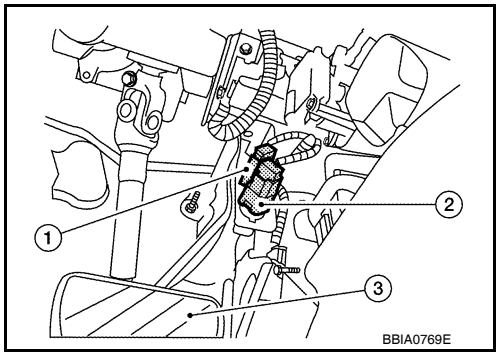

4. Check voltage between ASCD brake switch terminal 1 and ground with CONSULT-III or tester.

Voltage : Battery voltage

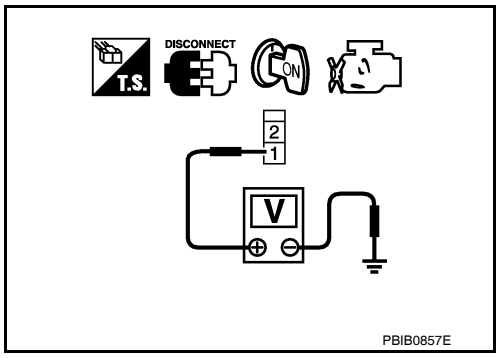

OK or NG

OK >> GO TO 8.
NG (M/T models)>>GO TO 4.
NG (CVT models)>>GO TO 6.

4. CHECK ASCD CLUTCH SWITCH POWER SUPPLY CIRCUIT

1. Turn ignition switch OFF.

2. Disconnect ASCD clutch switch (1) harness connector.
- Clutch pedal (2)
3. Turn ignition switch ON.

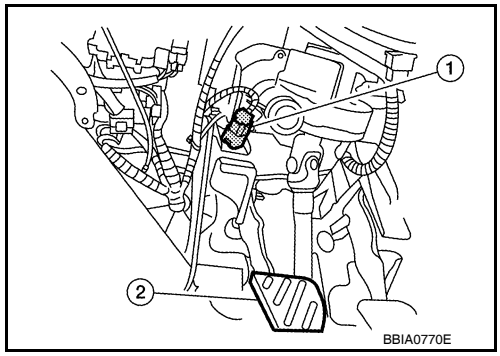

4. Check voltage between ASCD clutch switch terminal 1 and ground with CONSULT-III or tester.

Voltage: Battery voltage

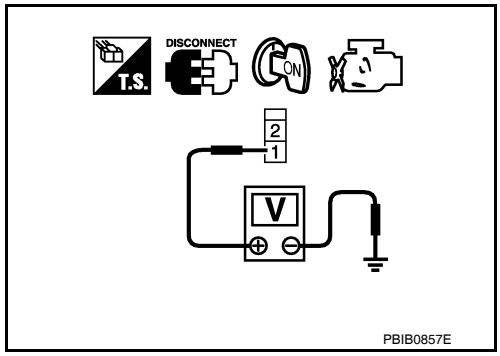

OK or NG

OK >> GO TO 7.
NG >> GO TO 5.

5. DETECT MALFUNCTIONING PART

Check the following.
- 10 A fuse
- Harness for open or short between ASCD clutch switch and fuse

>> Repair open circuit or short to ground or short to power in harness or connectors.

6. DETECT MALFUNCTIONING PART

Check the following.
- 10 A fuse
- Harness for open or short between ASCD brake switch and fuse

>> Repair open circuit or short to ground or short to power in harness or connectors.

7. CHECK ASCD CLUTCH SWITCH INPUT SIGNAL CIRCUIT FOR OPEN AND SHORT

1. Turn ignition switch OFF.
2. Check harness continuity between ASCD brake switch terminal 1 and ASCD clutch switch terminal 2. Refer to Wiring Diagram.

Continuity should exist.

3. Also check harness for short to ground and short to power.

OK or NG

OK >> GO TO 10.
NG >> Repair open circuit or short to ground or short to power in harness or connectors.

8. CHECK ASCD BRAKE SWITCH INPUT SIGNAL CIRCUIT FOR OPEN AND SHORT

1. Turn ignition switch OFF.
2. Disconnect ECM harness connector.
3. Check harness continuity between ECM terminal 110 and ASCD brake switch terminal 2. Refer to Wiring Diagram.

Continuity should exist.

4. Also check harness for short to ground and short to power.

OK or NG

OK >> GO TO 9.
NG >> Repair open circuit or short to ground or short to power in harness or connectors.

9. CHECK ASCD BRAKE SWITCH

Refer to EC-1574, "Component Inspection".

OK or NG

OK >> GO TO 15.
NG >> Replace ASCD brake switch.

10. CHECK ASCD CLUTCH SWITCH

Refer to EC-1574, "Component Inspection"

OK or NG

OK >> GO TO 15.
NG >> Replace ASCD clutch switch.

11. CHECK STOP LAMP SWITCH POWER SUPPLY CIRCUIT

1. Turn ignition switch OFF.
2. Disconnect stop lamp switch (2) harness connector.
- ASCD brake switch (1)
- Brake pedal (3)

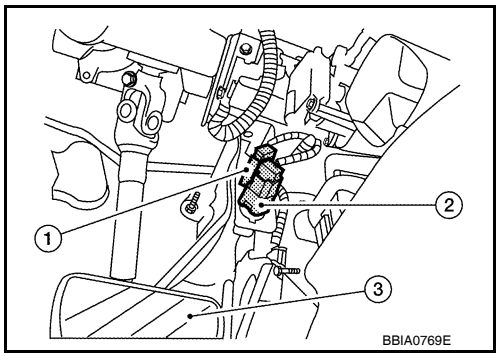

3. Check voltage between stop lamp switch terminal 1 and ground with CONSULT -III or tester.

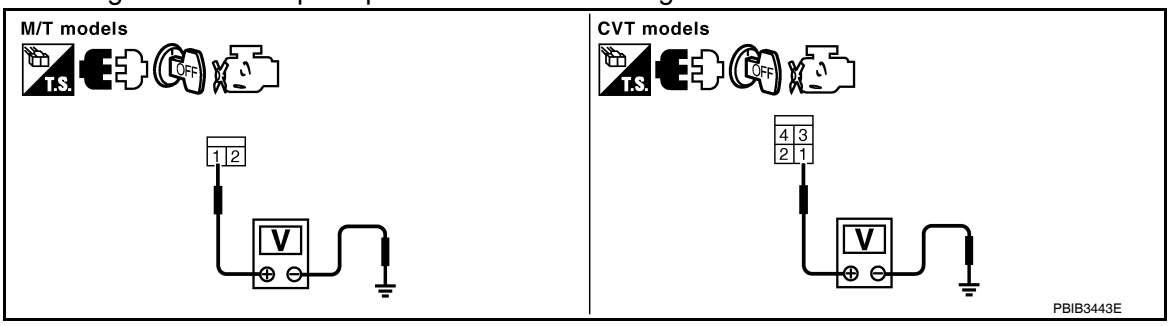

Voltage: Battery voltage

OK or NG

OK >> GO TO 13.
NG >> GO TO 12.

12. DETECT MALFUNCTIONING PART

Check the following.
- 10 A fuse
- Harness for open or short between stop lamp switch and battery

>> Repair open circuit or short to ground or short to power in harness or connectors.

13. CHECK STOP LAMP SWITCH INPUT SIGNAL CIRCUIT FOR OPEN AND SHORT

1. Disconnect ECM harness connector.
2. Check harness continuity between ECM terminal 106 and stop lamp switch terminal 2.
   Refer to Wiring Diagram.

Continuity should exist.

3. Also check harness for short to ground and short to power.

OK or NG

OK >> GO TO 14.
NG >> Repair open circuit or short to ground or short to power in harness or connectors.

14. CHECK STOP LAMP SWITCH

Refer to EC-1574, "Component Inspection"

OK or NG

OK >> GO TO 15.
NG >> Replace stop lamp switch.

15. CHECK INTERMITTENT INCIDENT

Refer to EC-1245.

>> **INSPECTION END**

Component Inspection

INFOID:0000000005286148

ASCD BRAKE SWITCH

1. Turn ignition switch OFF.
2. Disconnect ASCD brake switch harness connector.
3. Check continuity between ASCD brake switch terminals 1 and 2 under the following conditions.

Condition	Continuity
Brake pedal: Fully released.	Should exist.
Brake pedal: Slightly depressed.	Should not exist.

If NG, adjust ASCD brake switch installation, refer to BR-8, and perform step 3 again.

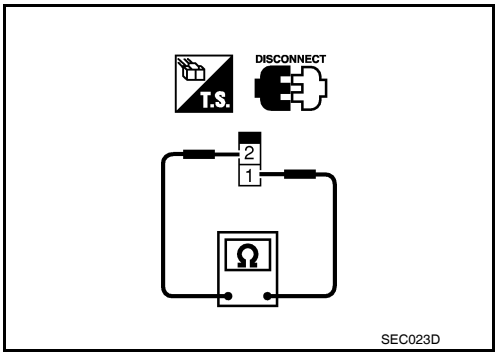

ASCD CLUTCH SWITCH

1. Turn ignition switch OFF.
2. Disconnect ASCD clutch switch harness connector.
3. Check continuity between ASCD clutch switch terminals 1 and 2 under the following conditions.

Condition	Continuity
Clutch pedal: Fully released.	Should exist.
Clutch pedal: Slightly depressed.	Should not exist.

If NG, adjust ASCD clutch switch installation, refer to CL-6, and perform step 3 again.

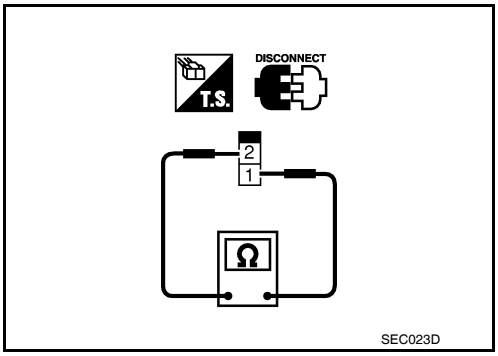

STOP LAMP SWITCH

1. Turn ignition switch OFF.
2. Disconnect stop lamp switch harness connector.

3. Check continuity between stop lamp switch terminals 1 and 2 under the following conditions.

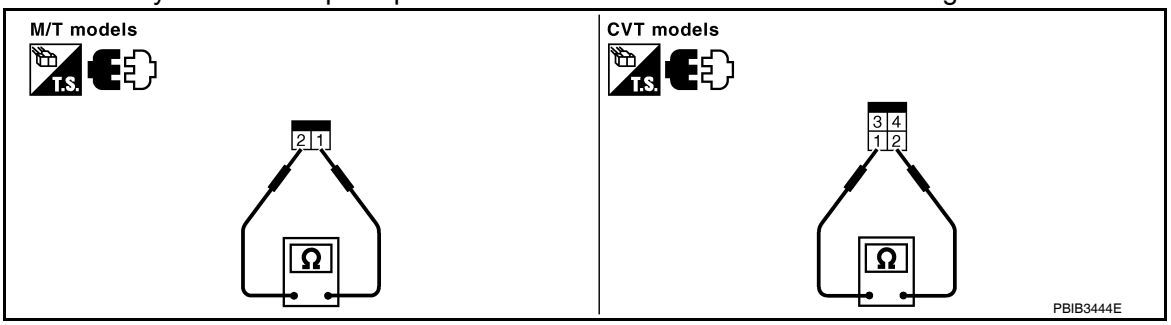

Condition	Continuity
Brake pedal: Fully released.	Should not exist.
Brake pedal: Slightly depressed.	Should exist.

If NG, adjust stop lamp switch installation, refer to BR-8, and perform step 3 again.

DTC P1574 ASCD VEHICLE SPEED SENSOR

Component Description

INFOID:0000000005286149

The ECM receives two vehicle speed sensor signals via CAN communication line. One is sent from combination meter, and the other is from TCM (Transmission control module). The ECM uses these signals for ASCD control. Refer to EC-1135 for ASCD functions.

On Board Diagnosis Logic

INFOID:0000000005286150

- **This self-diagnosis has the one trip detection logic.**
- **The MIL will not illuminate for this self-diagnosis.**

NOTE:
- **If DTC P1574 is displayed with DTC UXXXX, first perform the trouble diagnosis for DTC UXXXX.**
- **If DTC P1574 is displayed with DTC P0500, first perform the trouble diagnosis for DTC P0500. Refer to EC-1518.**
- **If DTC P1574 is displayed with DTC P0605, first perform the trouble diagnosis for DTC P0605. Refer to EC-1527.**
- **If DTC P1574 is displayed with DTC P0607, first perform the trouble diagnosis for DTC P0607. Refer to EC-1529.**

DTC No.	Trouble Diagnosis Name	DTC Detecting Condition	Possible Cause
P1574 1574	ASCD vehicle speed sensor	ECM detects a difference between two vehicle speed signals is out of the specified range.	• Harness or connectors (CAN communication line is open or shorted.) • Harness or connectors (Combination meter circuit is open or shorted.) • TCM (CVT models) • Combination meter • ECM

DTC Confirmation Procedure

INFOID:0000000005286151

CAUTION:
Always drive vehicle at a safe speed.
NOTE:
If DTC Confirmation Procedure has been previously conducted, always turn ignition switch OFF and wait at least 10 seconds before conducting the next test.
TESTING CONDITION:
Step 3 may be conducted with the drive wheels lifted in the shop or by driving the vehicle. If a road test is expected to be easier, it is unnecessary to lift the vehicle.

WITH CONSULT-III

1. Start engine.
2. Select “DATA MONITOR” mode with CONSULT-III.
3. Drive the vehicle at more than 40 km/h (25MPH).
4. Check DTC.
5. If DTC is detected, go to EC-1576, "Diagnosis Procedure".

WITH GST

Follow the procedure “WITH CONSULT-III” above.

Diagnosis Procedure

INFOID:0000000005286152

1.CHECK DTC WITH TCM

Check DTC with TCM. Refer to CVT-24.

OK or NG

OK >> GO TO 2.
NG >> Perform trouble shooting relevant to DTC indicated.

2. CHECK DTC WITH “ABS ACTUATOR AND ELECTRIC UNIT”

Refer to BRC-10.

OK or NG

OK >> GO TO 3.
NG >> Repair or replace.

3. CHECK COMBINATION METER

Check combination meter function.
Refer to DI-6.

>> **INSPECTION END**

DTC P1715 INPUT SPEED SENSOR

Description

INFOID:0000000005286153

ECM receives input speed signal from TCM through CAN communication line. ECM uses this signal for engine control.

CONSULT-III Reference Value in Data Monitor Mode

INFOID:0000000005286154

Specification data are reference values.

Monitor item	Condition	Specification
I/P PULLY SPD	• Vehicle speed: More than 20 km/h (12 MPH)	Almost the same speed as the tachometer indication

On Board Diagnosis Logic

INFOID:0000000005286155

The MIL will not illuminate for this self-diagnosis.
NOTE:
- **If DTC P1715 is displayed with DTC UXXXX first perform the trouble diagnosis for DTC UXXXX.**
- **If DTC P1715 is displayed with DTC P0335, first perform the trouble diagnosis for DTC P0335. Refer to EC-1425.**
- **If DTC P1715 is displayed with DTC P0340 first perform the trouble diagnosis for DTC P0340. Refer to EC-1431.**
- **If DTC P1715 is displayed with DTC P0605, first perform the trouble diagnosis for DTC P0605. Refer to EC-1527.**
- **If DTC P1715 is displayed with DTC P0607, first perform the trouble diagnosis for DTC P0607. Refer to EC-1529.**

DTC No.	Trouble diagnosis name	DTC detecting condition	Possible cause
P1715 1715	Input speed sensor (TCM output)	Input speed signal is different from the theoretical value calculated by ECM from output shaft revolution signal and engine rpm signal.	• Harness or connectors (CAN communication line is open or shorted) • Harness or connectors (Input speed sensor circuit is open or shorted) • TCM

DTC Confirmation Procedure

INFOID:0000000005286156

CAUTION:
Always drive vehicle at a safe speed.
NOTE:
If DTC Confirmation Procedure has been previously conducted, always turn ignition switch OFF and wait at least 10 seconds before conducting the next test.

WITH CONSULT-III

1. Turn ignition switch ON.
2. Select “DATA MONITOR” mode with CONSULT-III.
3. Start engine.
4. Drive vehicle at a speed of more than 50 km/h (31 MPH) for at least 5 seconds.
5. Check 1st trip DTC.
6. If 1st trip DTC is detected, go to EC-1578, "Diagnosis Procedure".

WITH GST

Follow the procedure “WITH CONSULT-III” above.

Diagnosis Procedure

INFOID:0000000005286157

1. CHECK DTC WITH TCM

Check DTC with TCM. Refer to CVT-24.

OK or NG

OK >> GO TO 2.
NG >> Perform trouble shooting relevant to DTC indicated.

2. REPLACE TCM

Replace TCM. Refer to CVT-27.

>> **INSPECTION END**

DTC P1805 BRAKE SWITCH

Description

INFOID:0000000005286158

Brake switch signal is applied to the ECM through the stop lamp switch when the brake pedal is depressed. This signal is used mainly to decrease the engine speed when the vehicle is being driven.

CONSULT-III Reference Value in Data Monitor Mode

INFOID:0000000005286159

Specification data are reference values.

monitor item	condition		specification
BRAKE SW	• Ignition switch: ON	Brake pedal: Fully released	OFF
		Brake pedal: Slightly depressed	ON

On Board Diagnosis Logic

INFOID:0000000005286160

The MIL will not illuminate for this self-diagnosis.

DTC No.	Trouble diagnosis name	DTC detecting condition	Possible cause
P1805 1805	Brake switch	A brake switch signal is not sent to ECM for extremely long time while the vehicle is being driven.	• Harness or connectors (Stop lamp switch circuit is open or shorted.) • Stop lamp switch

FAIL-SAFE MODE

When the malfunction is detected, the ECM enters in fail-safe mode.

Engine operation condition in fail-fail safe mode	
ECM controls the electric throttle control actuator by regulating the throttle opening to a small range. Therefore, acceleration will be poor.	
Vehicle condition	Driving condition
Engine: Idling	Normal
Accelerating	Poor acceleration

DTC Confirmation Procedure

INFOID:0000000005286161

1. Turn ignition switch ON.
2. Fully depress the brake pedal for at least 5 seconds.
3. Erase the DTC with CONSULT-III.
4. Check 1st trip DTC.
5. If 1st trip DTC is detected, go to EC-1582, "Diagnosis Procedure".

Wiring Diagram

INFOID:0000000005286162

EC-BRK/SW-01

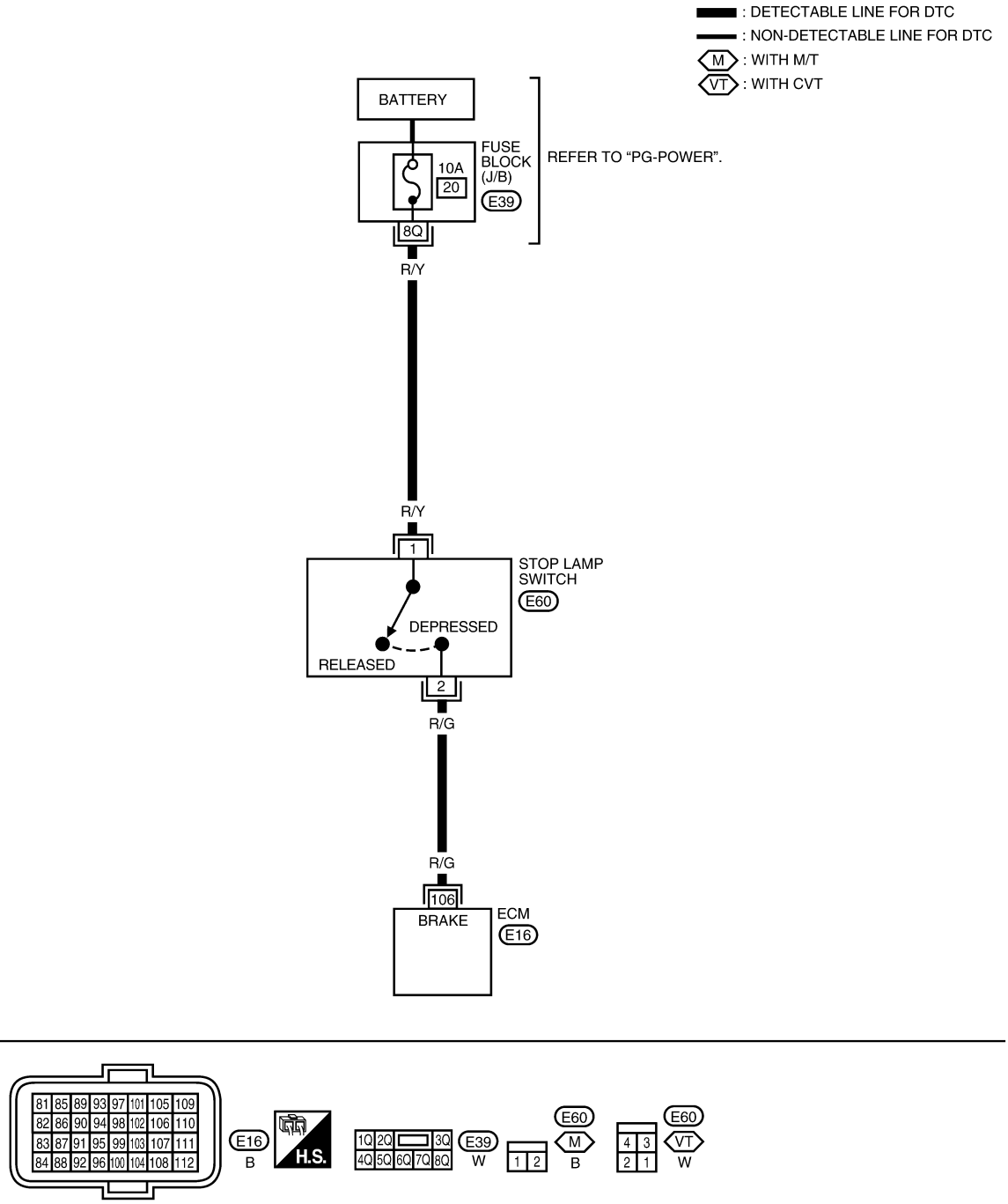

Specification data are reference values and are measured between each terminal and ground.

TERMINAL NO.	WIRE COLOR	ITEM	CONDITION	DATA (DC Voltage)
106	R/G	Stop lamp switch	**[Ignition switch: OFF]** • Brake pedal: Fully released	Approximately 0 V
			[Ignition switch: OFF] • Brake pedal: Slightly depressed	BATTERY VOLTAGE (11 - 14 V)

Diagnosis Procedure

INFOID:0000000005286163

1. CHECK STOP LAMP SWITCH CIRCUIT

1. Turn ignition switch OFF.
2. Check the stop lamp when depressing and releasing the brake pedal.

Brake pedal	Stop lamp
Fully released	Not illuminated
Slightly depressed	Illuminated

OK or NG

OK >> GO TO 4.
NG >> GO TO 2.

2. CHECK STOP LAMP SWITCH POWER SUPPLY CIRCUIT

1. Disconnect stop lamp switch (2) harness connector.
- ASCD brake switch (1)
- Brake pedal (3)

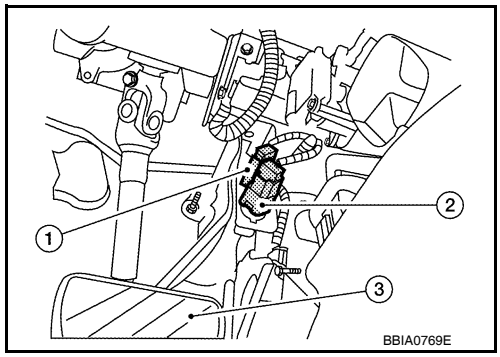

2. Check voltage between stop lamp switch terminal 1 and ground with CONSULT-III or tester.

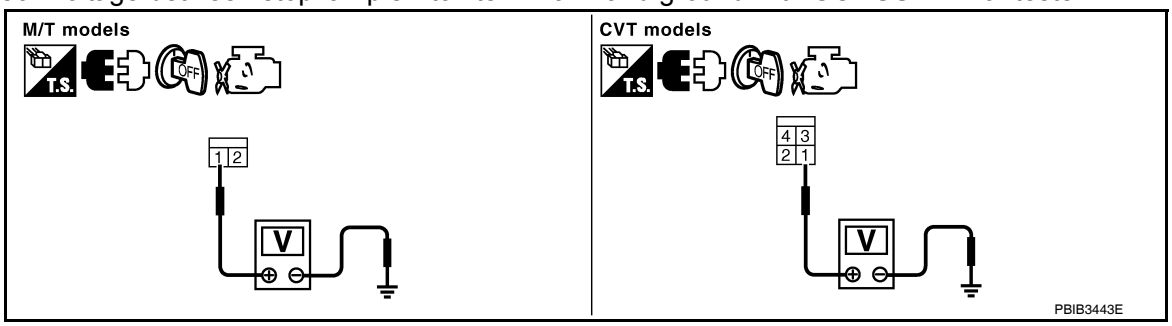

Voltage: Battery voltage

OK or NG

OK >> GO TO 4.
NG >> GO TO 3.

3. DETECT MALFUNCTIONING PART

Check the following.
- 10 A fuse
- Harness for open and short between stop lamp switch and battery

>> Repair open circuit or short to ground or short to power in harness or connectors.

4. CHECK STOP LAMP SWITCH INPUT SIGNAL CIRCUIT FOR OPEN AND SHORT

1. Disconnect stop lamp switch harness connector.
2. Disconnect ECM harness connector.
3. Check harness continuity between stop lamp switch terminal 2 and ECM terminal 106. Refer to Wiring Diagram.

Continuity should exist.

4. Also check harness for short to ground and short to power.

OK or NG

OK >> GO TO 5.
NG >> Repair open circuit or short to ground or short to power in harness connectors.

5. CHECK STOP LAMP SWITCH

Refer to EC-1583, "Component Inspection".

OK or NG

OK >> GO TO 6.
NG >> Replace stop lamp switch.

6. CHECK INTERMITTENT INCIDENT

Refer to EC-1245.

>> **INSPECTION END**

Component Inspection

INFOID:0000000005286164

STOP LAMP SWITCH

1. Turn ignition switch OFF.
2. Disconnect stop lamp switch harness connector.
3. Check continuity between stop lamp switch terminals 1 and 2 under the following conditions.

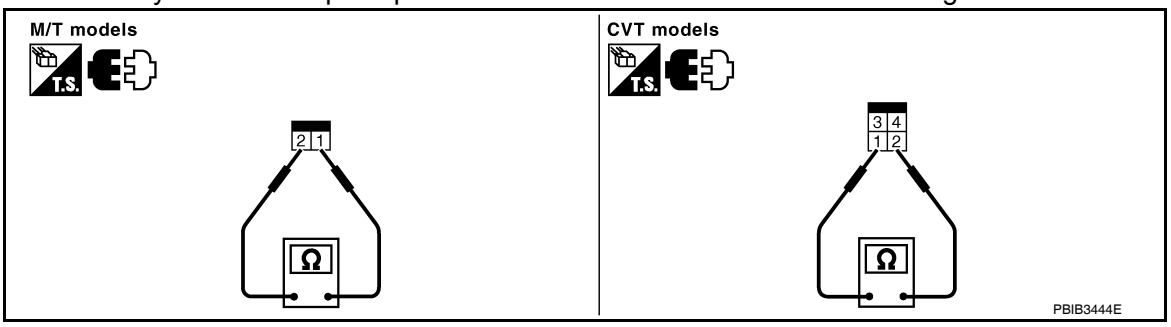

Condition	Continuity
Brake pedal: Fully released.	Should not exist.
Brake pedal: Slightly depressed.	Should exist.

If NG, adjust stop lamp switch installation, refer to BR-8, and perform step 3 again.

DTC P2100, P2103 THROTTLE CONTROL MOTOR RELAY

Component Description

INFOID:0000000005286165

Power supply for the throttle control motor is provided to the ECM via throttle control motor relay. The throttle control motor relay is controlled ON/OFF by the ECM. When the ignition switch is turned ON, the ECM sends an ON signal to throttle control motor relay and battery voltage is provided to the ECM. When the ignition switch is turned OFF, the ECM sends an OFF signal to throttle control motor relay and battery voltage is not provided to the ECM.

CONSULT-III Reference Value in Data Monitor Mode

INFOID:0000000005286166

Specification data are reference values.

Monitor item	Condition	Specification
THRTL RELAY	• Ignition switch: ON	ON

On Board Diagnosis Logic

INFOID:0000000005286167

These self-diagnoses have one trip detection logic.

DTC No.	Trouble diagnosis name	DTC detecting condition	Possible cause
P2100 2100	Throttle control motor relay circuit open	ECM detects that the voltage of power source for throttle control motor is excessively low.	• Harness or connectors (Throttle control motor relay circuit is open) • Throttle control motor relay
P2103 2103	Throttle control motor relay circuit short	ECM detects the throttle control motor relay is stuck ON.	• Harness or connectors (Throttle control motor relay circuit is shorted) • Throttle control motor relay

FAIL-SAFE MODE

When the malfunction is detected, ECM enters fail-safe mode and the MIL illuminates.

Engine operating condition in fail-safe mode
ECM stops the electric throttle control actuator control, throttle valve is maintained at a fixed opening (approx. 5 degrees) by the return spring.

DTC Confirmation Procedure

INFOID:0000000005286168

NOTE:
If DTC Confirmation Procedure has been previously conducted, always turn ignition switch OFF and wait at least 10 seconds before conducting the next test.

PROCEDURE FOR DTC P2100

1. Turn ignition switch ON and wait at least 2 seconds.
2. Start engine and let it idle for 5 seconds.
3. Check DTC.
4. If DTC is detected, go to EC-1586, "Diagnosis Procedure".

PROCEDURE FOR DTC P2103

TESTING CONDITION:
Before performing the following procedure, confirm that battery voltage is more than 8 V at idle.

1. Turn ignition switch ON and wait at least 1 second.
2. Check DTC.
3. If DTC is detected, go to EC-1586, "Diagnosis Procedure".

Wiring Diagram

INFOID:0000000005286169

EC-ETC2-01

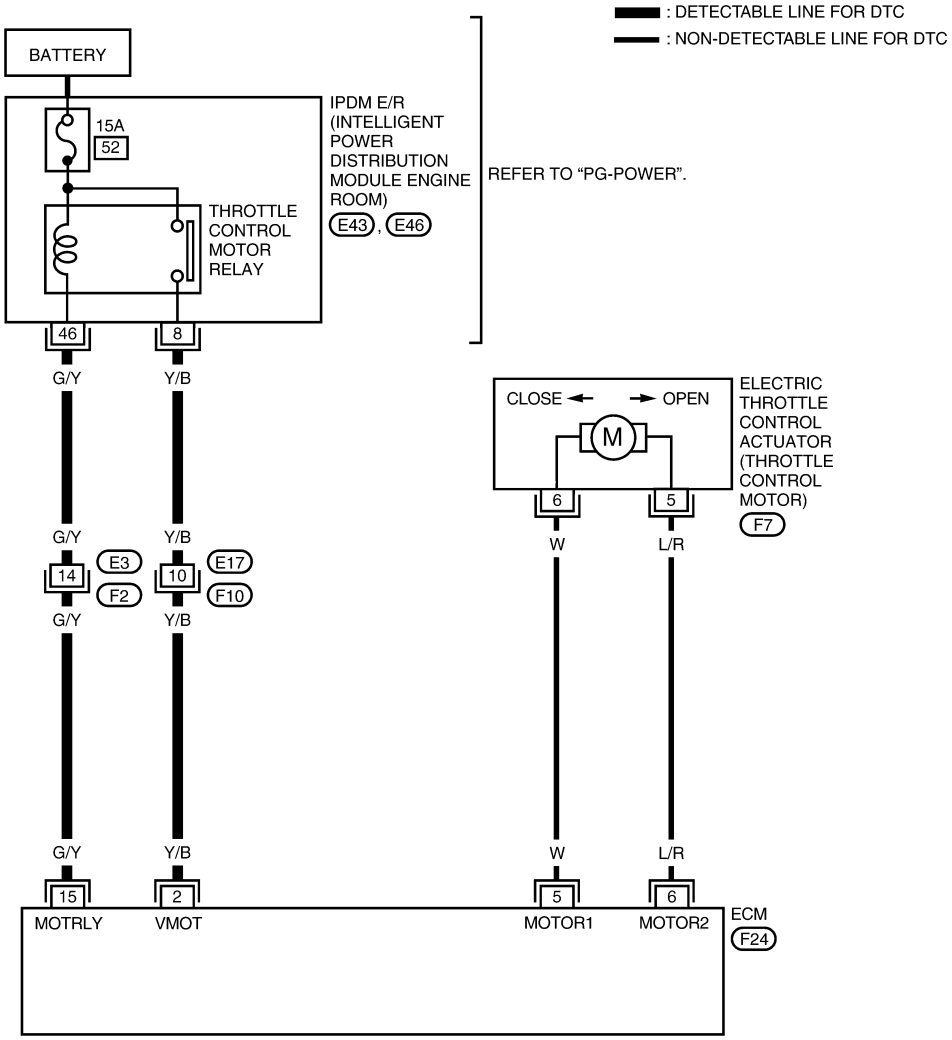

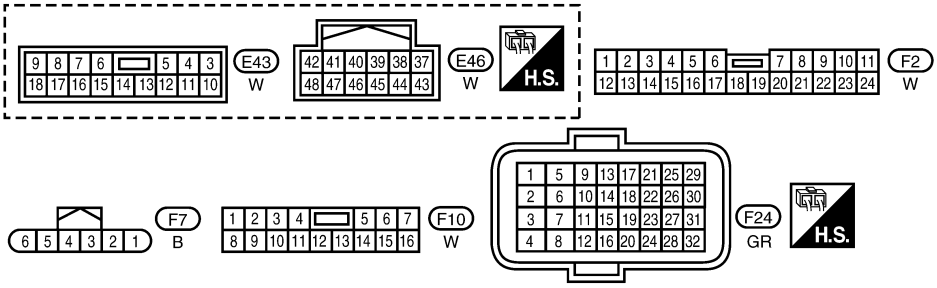

Specification data are reference values and are measured between each terminal and ground.
Pulse signal is measured by CONSULT-III.

CAUTION:

Never use ECM ground terminals when measuring input/output voltage. Doing so may result in damage to the ECM's transistor. Use a ground other than ECM terminals, such as the ground.

TERMINAL NO.	WIRE COLOR	ITEM	CONDITION	DATA (DC Voltage)
2	Y/B	Throttle control motor power supply	**[Ignition switch: ON]**	BATTERY VOLTAGE (11 - 14 V)
5	W	Throttle control motor (Open)	**[Ignition switch: ON]** • Engine stopped • Selector lever: D (CVT), 1st (M/T) • Accelerator pedal: Fully depressed	0 - 14 V★ 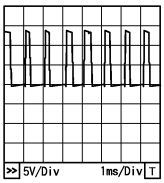 PBIA8150J
6	L/R	Throttle control motor (Close)	**[Ignition switch: ON]** • Engine stopped • Selector lever: D (CVT), 1st (M/T) • Accelerator pedal: Fully released	0 - 14 V★ 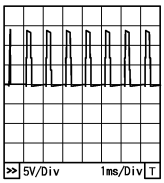 PBIA8149J
15	G/Y	Throttle control motor relay	**[Ignition switch: OFF]**	BATTERY VOLTAGE (11 - 14 V)
			[Ignition switch: ON]	0 - 1.0 V

★: Average voltage for pulse signal (Actual pulse signal can be confirmed by oscilloscope.)

Diagnosis Procedure

INFOID:0000000005286170

1. CHECK THROTTLE CONTROL MOTOR RELAY POWER SUPPLY CIRCUIT-I

1. Turn ignition switch OFF.
2. Check voltage between ECM terminal 15 and ground with CONSULT-III or tester.

Voltage: Battery voltage

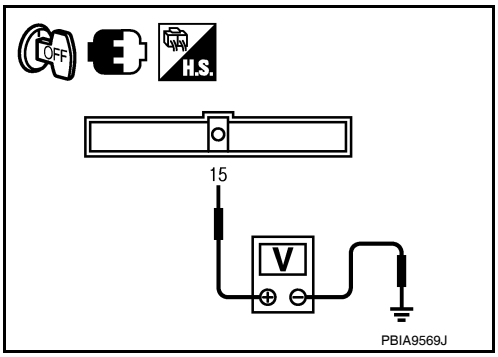

OK or NG

OK >> GO TO 5.
NG >> GO TO 2.

2. CHECK THROTTLE CONTROL MOTOR RELAY POWER SUPPLY CIRCUIT-II

1. Disconnect ECM harness connector.
2. Disconnect IPDM E/R harness connector E46.
3. Check continuity between ECM terminal 15 and IPDM E/R terminal 46. Refer to Wiring Diagram.

Continuity should exist.

4. Also check harness for short to ground and short to power.

OK or NG

OK >> GO TO 4.
NG >> GO TO 3.

3. DETECT MALFUNCTIONING PART

Check the following.
- Harness connectors E3, F2
- Harness for open or short between ECM and IPDM E/R

>> Repair open circuit or short to ground or short to power in harness or connectors.

4. CHECK FUSE

1. Disconnect 15 A fuse.
2. Check 15 A fuse for blown.

OK or NG

OK >> GO TO 8.
NG >> Replace 15 A fuse.

5. CHECK THROTTLE CONTROL MOTOR RELAY INPUT SIGNAL CIRCUIT-I

Check voltage between ECM terminal 2 and ground under the following conditions with CONSULT-III or tester.

Ignition switch	Voltage
OFF	Approximately 0 V
ON	Battery voltage (11 - 14 V)

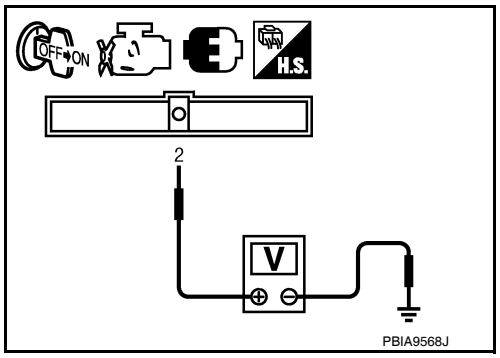

OK or NG

OK >> GO TO 8.
NG >> GO TO 6.

6. CHECK THROTTLE CONTROL MOTOR RELAY INPUT SIGNAL CIRCUIT-II

1. Turn ignition switch OFF.
2. Disconnect ECM harness connector.
3. Disconnect IPDM E/R harness connector E43.
4. Check continuity between ECM terminal 2 and IPDM E/R terminal 8.
   Refer to Wiring Diagram.

Continuity should exist.

5. Also check harness for short to ground and short to power.

OK or NG

OK >> GO TO 8.
NG >> GO TO 7.

7. DETECT MALFUNCTIONING PART

Check the following.
- Harness connectors E17, F10
- Harness for open or short between ECM and IPDM E/R

>> Repair open circuit or short to ground or short to power in harness or connectors.

8. CHECK INTERMITTENT INCIDENT

Refer to EC-1245.

OK or NG

OK >> Replace IPDM E/R. Refer to PG-17.
NG >> Repair or replace harness or connectors.

DTC P2101 ELECTRIC THROTTLE CONTROL FUNCTION

Description

INFOID:0000000005286171

NOTE:
If DTC P2101 is displayed with DTC P2100 or P2119, first perform the trouble diagnosis for DTC P2100 or P2119. Refer to EC-1584 or EC-1599.
Electric throttle control actuator consists of throttle control motor, throttle position sensor, etc.
The throttle control motor is operated by the ECM and it opens and closes the throttle valve.
The current opening angle of the throttle valve is detected by the throttle position sensor. The throttle position sensor provides feedback to the ECM when opens/closes the throttle valve in response to driving conditions via the throttle control motor.

On Board Diagnosis Logic

INFOID:0000000005286172

This self-diagnosis has the one trip detection logic.

DTC No.	Trouble diagnosis name	DTC detecting condition	Possible cause
P2101 2101	Electric throttle control performance	Electric throttle control function does not operate properly.	• Harness or connectors (Throttle control motor circuit is open or shorted) • Electric throttle control actuator

FAIL-SAFE MODE

When the malfunction is detected, the ECM enters fail-safe mode and the MIL illuminates.

Engine operating condition in fail-safe mode
ECM stops the electric throttle control actuator control, throttle valve is maintained at a fixed opening (approx. 5 degrees) by the return spring.

DTC Confirmation Procedure

INFOID:0000000005286173

NOTE:
If DTC Confirmation Procedure has been previously conducted, always turn ignition switch OFF and wait at least 10 seconds before conducting the next test.
TESTING CONDITION:
Before performing the following procedure, confirm that battery voltage is more than 11 V when engine is running.

1. Turn ignition switch ON and wait at least 2 seconds.
2. Start engine and let it idle for 5 seconds.
3. Check DTC.
4. If DTC is detected, go to EC-1590, "Diagnosis Procedure".

Wiring Diagram

INFOID:0000000005286174

EC-ETC1-01

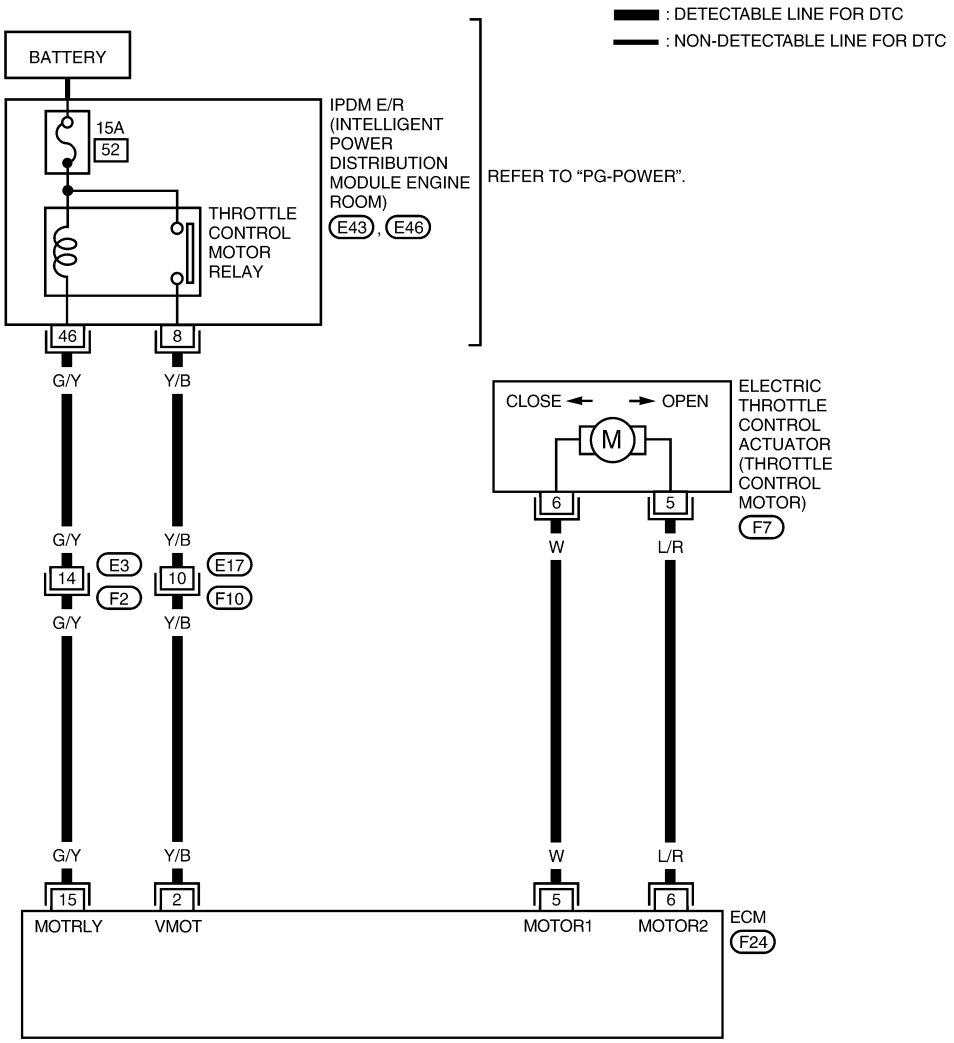

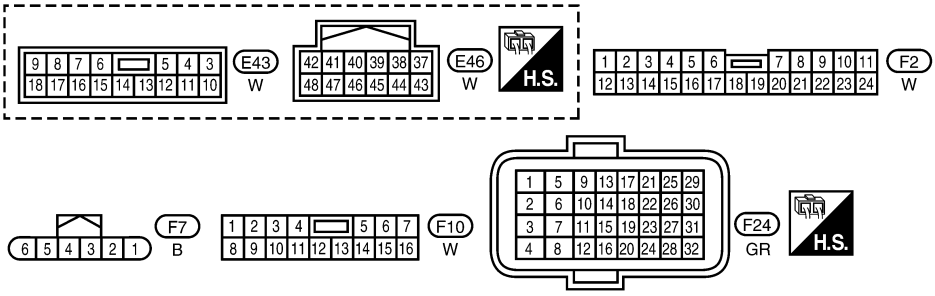

AABWA0269GB

Specification data are reference values and are measured between each terminal and ground.
Pulse signal is measured by CONSULT-III.

CAUTION:

Never use ECM ground terminals when measuring input/output voltage. Doing so may result in damage to the ECM's transistor. Use a ground other than ECM terminals, such as the ground.

TERMINAL NO.	WIRE COLOR	ITEM	CONDITION	DATA (DC Voltage)
2	Y/B	Throttle control motor power supply	**[Ignition switch: ON]**	BATTERY VOLTAGE (11 - 14 V)
5	W	Throttle control motor (Open)	**[Ignition switch: ON]** • Engine stopped • Selector lever: D (CVT), 1st (M/T) • Accelerator pedal: Fully depressed	0 - 14 V★ 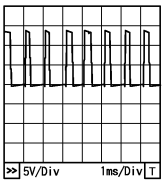 PBIA8150J
6	L/R	Throttle control motor (Close)	**[Ignition switch: ON]** • Engine stopped • Selector lever: D (CVT), 1st (M/T) • Accelerator pedal: Fully released	0 - 14 V★ 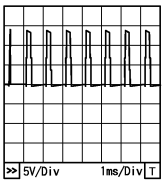 PBIA8149J
15	G/Y	Throttle control motor relay	**[Ignition switch: OFF]**	BATTERY VOLTAGE (11 - 14 V)
			[Ignition switch: ON]	0 - 1.0 V

★: Average voltage for pulse signal (Actual pulse signal can be confirmed by oscilloscope.)

Diagnosis Procedure

INFOID:0000000005286175

1. CHECK GROUND CONNECTIONS

1. Turn ignition switch OFF.
2. Loosen and retighten ground screws on the body.
   Refer to EC-1251, "Ground Inspection".

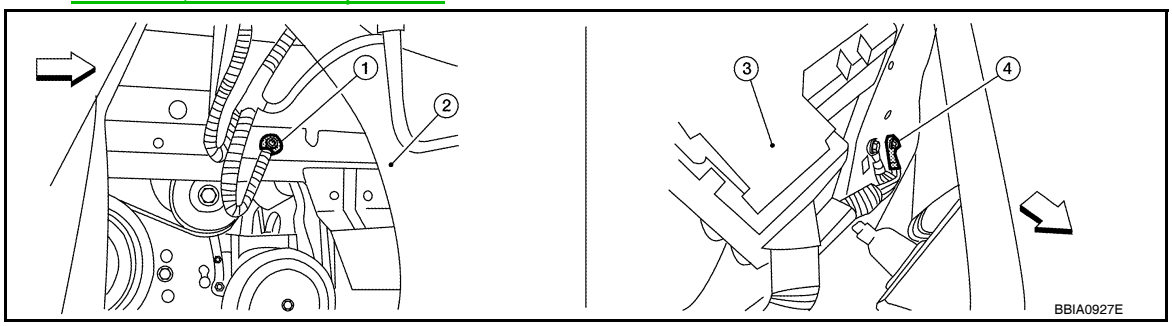

⇦: Vehicle front

1. Body ground E9 (view with front wheel RH and fender protector RH removed.)
2. Washer tank
3. Fuse and fusible link box
4. Body ground E15

OK or NG

OK >> GO TO 2.
NG >> Repair or replace ground connections.

2. CHECK THROTTLE CONTROL MOTOR RELAY INPUT SIGNAL CIRCUIT-I

Check voltage between ECM terminal 2 and ground under the following conditions with CONSULT-III or tester.

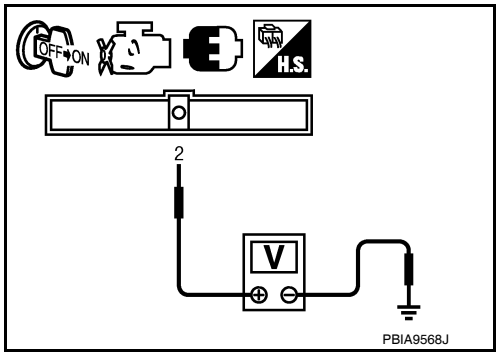

Ignition switch	Voltage
OFF	Approximately 0 V
ON	Battery voltage (11 - 14 V)

OK or NG

OK >> GO TO 10.
NG >> GO TO 3.

3. CHECK THROTTLE CONTROL MOTOR RELAY INPUT SIGNAL CIRCUIT-II

1. Turn ignition switch OFF.
2. Disconnect ECM harness connector.
3. Disconnect IPDM E/R harness connector E43.
4. Check continuity between ECM terminal 2 and IPDM E/R terminal 8.
   Refer to Wiring Diagram.

Continuity should exist.

5. Also check harness for short to ground and short to power.

OK or NG

OK >> GO TO 5.
NG >> GO TO 4.

4. DETECT MALFUNCTIONING PART

Check the following.
- Harness connectors E17, F10
- Harness for open or short between ECM and IPDM E/R

>> Repair open circuit or short to ground or short to power in harness or connectors.

5. CHECK THROTTLE CONTROL MOTOR RELAY POWER SUPPLY CIRCUIT-I

1. Reconnect all harness connectors disconnected.
2. Check voltage between ECM terminal 15 and ground with CONSULT-III or tester.

Voltage: Battery voltage

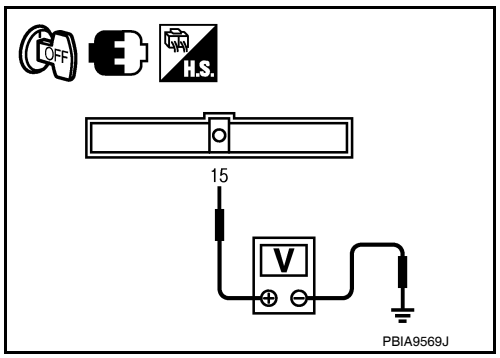

OK or NG

OK >> GO TO 9.
NG >> GO TO 6.

6. CHECK THROTTLE CONTROL MOTOR RELAY POWER SUPPLY CIRCUIT-II

1. Disconnect ECM harness connector.
2. Disconnect IPDM E/R harness connector E46.
3. Check harness continuity between ECM terminal 15 and IPDM E/R terminal 46.
   Refer to Wiring Diagram.

Continuity should exist.

4. Also check harness for short to ground and short to power.

OK or NG

OK >> GO TO 8.
NG >> GO TO 7.

7. DETECT MALFUNCTIONING PART

Check the following.
- Harness connectors E3, F2
- Harness for open or short between ECM and IPDM E/R

>> Repair open circuit or short to ground or short to power in harness or connectors.

8. CHECK FUSE

1. Disconnect 15 A fuse.
2. Check if 15 A fuse is blown.

OK or NG

OK >> GO TO 9.
NG >> Replace 15A fuse.

9. CHECK INTERMITTENT INCIDENT

Refer to EC-1245.

OK or NG

OK >> Replace IPDM E/R. Refer to PG-17.
NG >> Repair or replace harness or connectors.

10. CHECK THROTTLE CONTROL MOTOR OUTPUT SIGNAL CIRCUIT FOR OPEN OR SHORT

1. Turn ignition switch OFF.
2. Disconnect electric throttle control actuator (1) harness connector.
- ⇦: Vehicle front
3. Disconnect ECM harness connector.
4. Check harness continuity between the following terminals. Refer to Wiring Diagram.

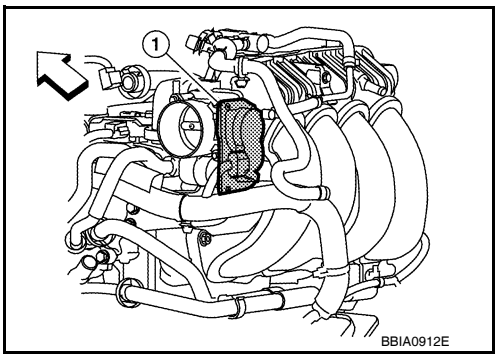

Electric throttle control actuator terminal	ECM terminal	Continuity
5	5	Should not exist.
	6	Should exist.
6	5	Should exist.
	6	Should not exist.

5. Also check harness for short to ground and short to power.

OK or NG

OK >> GO TO 11.
NG >> Repair or replace.

11. CHECK ELECTRIC THROTTLE CONTROL ACTUATOR VISUALLY

1. Remove the intake air duct.
2. Check if foreign matter is caught between the throttle valve (1) and the housing.
- ⇦: Vehicle front
- Electric throttle control actuator (2)

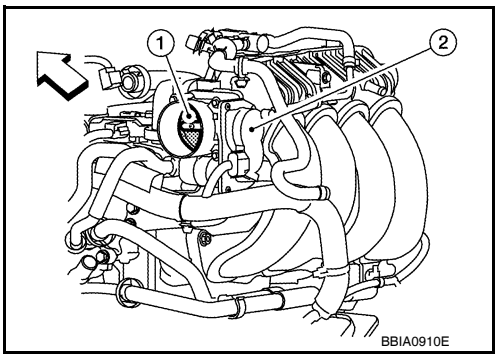

OK or NG

OK >> GO TO 12.
NG >> Remove the foreign matter and clean the electric throttle control actuator inside.

12. CHECK THROTTLE CONTROL MOTOR

Refer to EC-1593, "Component Inspection".

OK or NG

OK >> GO TO 13.
NG >> GO TO 14.

13. CHECK INTERMITTENT INCIDENT

Refer to EC-1245.

OK or NG

OK >> GO TO 14.
NG >> Repair or replace harness or connectors.

14. REPLACE ELECTRIC THROTTLE CONTROL ACTUATOR

1. Replace the electric throttle control actuator.
2. Perform EC-1193, "Throttle Valve Closed Position Learning".
3. Perform EC-1193, "Idle Air Volume Learning".

>> **INSPECTION END**

Component Inspection

INFOID:0000000005286176

THROTTLE CONTROL MOTOR

1. Disconnect electric throttle control actuator harness connector.
2. Check resistance between terminals 5 and 6.

Resistance: Approximately 1 - 15 Ω [at 25 °C (77°F)]

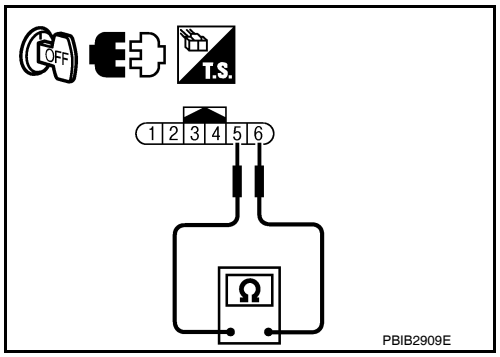

3. If NG, replace electric throttle control actuator and go to next step.
4. Perform EC-1193, "Throttle Valve Closed Position Learning".
5. Perform EC-1193, "Idle Air Volume Learning".

Removal and Installation

INFOID:0000000005286177

ELECTRIC THROTTLE CONTROL ACTUATOR

Refer to EM-135.

DTC P2118 THROTTLE CONTROL MOTOR

Component Description

INFOID:0000000005286178

The throttle control motor is operated by the ECM and it opens and closes the throttle valve.
The current opening angle of the throttle valve is detected by the throttle position sensor. The throttle position sensor provides feedback to the ECM when opens/closes the throttle valve in response to driving conditions via the throttle control motor.

On Board Diagnosis Logic

INFOID:0000000005286179

This self-diagnosis has the one trip detection logic.

DTC No.	Trouble diagnosis name	DTC detecting condition	Possible cause
P2118 2118	Throttle control motor circuit short	ECM detects short in both circuits between ECM and throttle control motor.	• Harness or connectors (Throttle control motor circuit is shorted.) • Electric throttle control actuator (Throttle control motor)

FAIL-SAFE MODE
When the malfunction is detected, ECM enters fail-safe mode and the MIL illuminates.

Engine operating condition in fail-safe mode
ECM stops the electric throttle control actuator control, throttle valve is maintained at a fixed opening (approx. 5 degrees) by the return spring.

DTC Confirmation Procedure

INFOID:0000000005286180

NOTE:
If DTC Confirmation Procedure has been previously conducted, always turn ignition switch OFF and wait at least 10 seconds before conducting the next test.

1. Turn ignition switch ON and wait at least 2 seconds.
2. Start engine and let it idle for 5 seconds.
3. Check DTC.
4. If DTC is detected, go to EC-1596, "Diagnosis Procedure".

Wiring Diagram

INFOID:0000000005286181

EC-ETC3-01

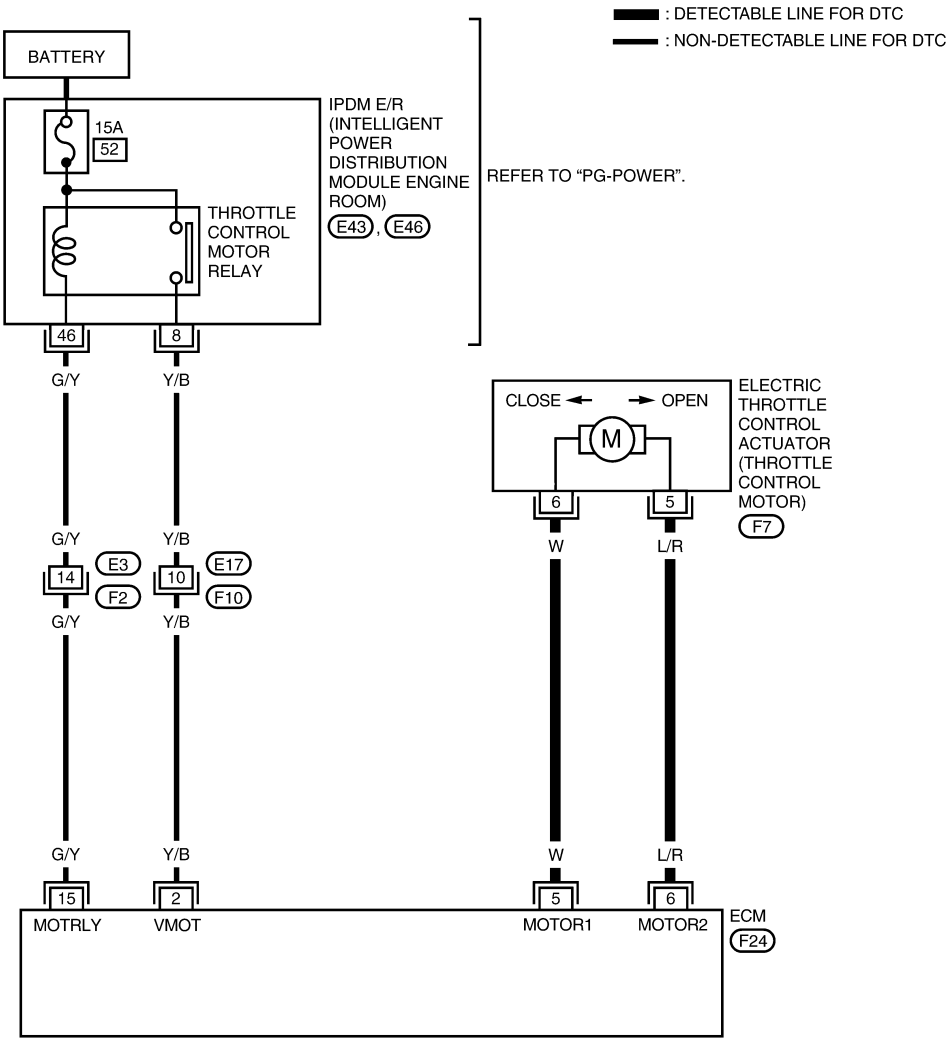

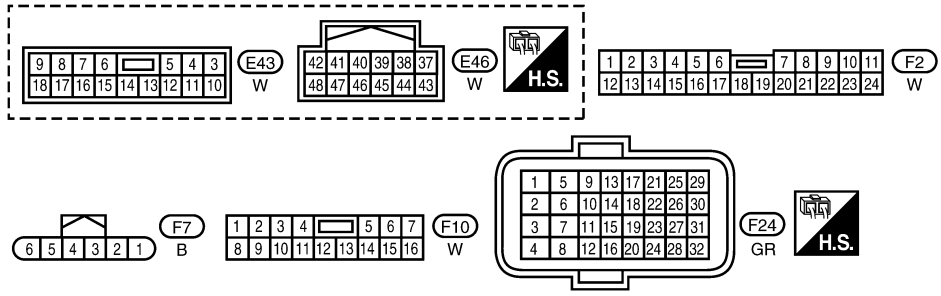

BBWA3055E

Specification data are reference values and are measured between each terminal and ground.
Pulse signal is measured by CONSULT-III.

CAUTION:

Never use ECM ground terminals when measuring input/output voltage. Doing so may result in damage to the ECM's transistor. Use a ground other than ECM terminals, such as the ground.

TERMINAL NO.	WIRE COLOR	ITEM	CONDITION	DATA (DC Voltage)
2	Y/B	Throttle control motor power supply	**[Ignition switch: ON]**	BATTERY VOLTAGE (11 - 14 V)
5	W	Throttle control motor (Open)	**[Ignition switch: ON]** • Engine stopped • Selector lever: D (CVT), 1st (M/T) • Accelerator pedal: Fully depressed	0 - 14 V★ 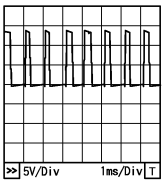 PBIA8150J
6	L/R	Throttle control motor (Close)	**[Ignition switch: ON]** • Engine stopped • Selector lever: D (CVT), 1st (M/T) • Accelerator pedal: Fully released	0 - 14 V★ 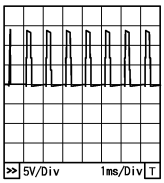 PBIA8149J
15	G/Y	Throttle control motor relay	**[Ignition switch: OFF]**	BATTERY VOLTAGE (11 - 14 V)
			[Ignition switch: ON]	0 - 1.0 V

★: Average voltage for pulse signal (Actual pulse signal can be confirmed by oscilloscope.)

Diagnosis Procedure

INFOID:0000000005286182

1. CHECK GROUND CONNECTIONS

1. Turn ignition switch OFF.
2. Loosen and retighten engine screws on the body.
   Refer to EC-1251, "Ground Inspection".

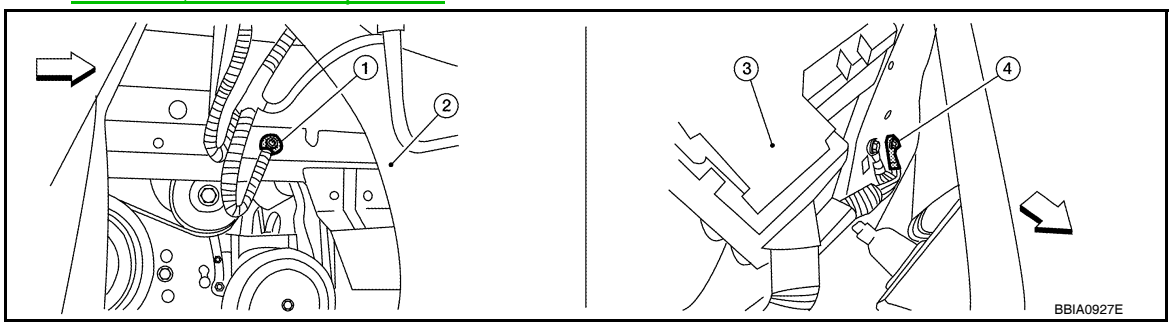

⇦: Vehicle front

1. Body ground E9 (view with front wheel RH and fender protector RH removed.)
2. Washer tank
3. Fuse and fusible link box
4. Body ground E15

OK or NG

OK >> GO TO 2.
NG >> Repair or replace ground connections.

2. CHECK THROTTLE CONTROL MOTOR OUTPUT SIGNAL CIRCUIT FOR OPEN OR SHORT

1. Disconnect electric throttle control actuator (1) harness connector.
- ⇦: Vehicle front
2. Disconnect ECM harness connector.
3. Check harness continuity between the following terminals. Refer to Wiring Diagram.

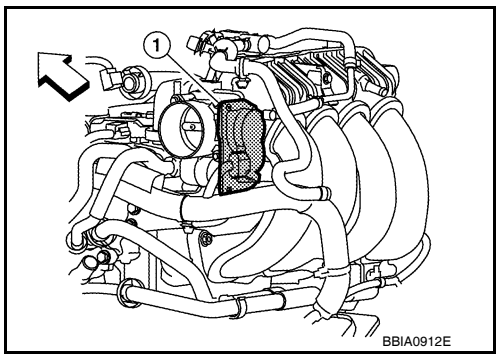

Electric throttle control actuator terminal	ECM terminal	Continuity
5	5	Should not exist.
	6	Should exist.
6	5	Should exist.
	6	Should not exist.

4. Also check harness for short to ground and short to power.

OK or NG

OK >> GO TO 3.
NG >> Repair open circuit or short to ground or short to power in harness or connectors.

3. CHECK THROTTLE CONTROL MOTOR

Refer to EC-1597, "Component Inspection".

OK or NG

OK >> GO TO 4.
NG >> GO TO 5.

4. CHECK INTERMITTENT INCIDENT

Refer to EC-1245.

OK or NG

OK >> GO TO 5.
NG >> Repair or replace harness or connectors.

5. REPLACE ELECTRIC THROTTLE CONTROL ACTUATOR

1. Replace the electric throttle control actuator.
2. Perform EC-1193, "Throttle Valve Closed Position Learning".
3. Perform EC-1193, "Idle Air Volume Learning".

>> **INSPECTION END**

Component Inspection

INFOID:0000000005286183

THROTTLE CONTROL MOTOR

1. Disconnect electric throttle control actuator harness connector.
2. Check resistance between terminals 5 and 6.

Resistance: Approximately 1 - 15 Ω [at 25 °C (77°F)]

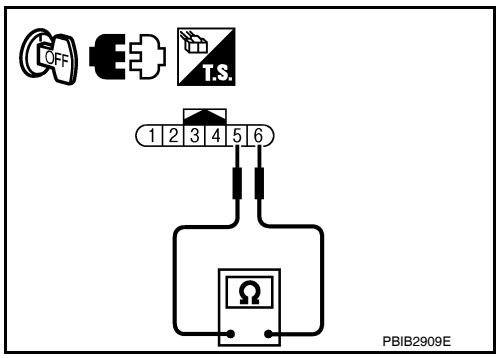

3. If NG, replace electric throttle control actuator and go to next step.
4. Perform EC-1193, "Throttle Valve Closed Position Learning".
5. Perform EC-1193, "Idle Air Volume Learning".

Removal and Installation

INFOID:0000000005286184

ELECTRIC THROTTLE CONTROL ACTUATOR

Refer to EM-135.

DTC P2119 ELECTRIC THROTTLE CONTROL ACTUATOR

Component Description

INFOID:0000000005286185

Electric throttle control actuator consists of throttle control motor, throttle position sensor, etc.
The throttle control motor is operated by the ECM and it opens and closes the throttle valve.
The throttle position sensor detects the throttle valve position, and the opening and closing speed of the throttle valve and feeds the voltage signals to the ECM. The ECM judges the current opening angle of the throttle valve from these signals and open/closes the throttle valve in response to driving conditions via the throttle control motor.

On Board Diagnosis Logic

INFOID:0000000005286186

This self-diagnosis has the one trip detection logic.

DTC No.	Trouble diagnosis name	DTC detecting condition		Possible cause
P2119 2119	Electric throttle control actuator	A)	Electric throttle control actuator does not function properly due to the return spring malfunction.	• Electric throttle control actuator
		B)	Throttle valve opening angle in fail-safe mode is not in specified range.	
		C)	ECM detects the throttle valve is stuck open.	

FAIL-SAFE MODE

When the malfunction is detected, ECM enters fail-safe mode and the MIL illuminates.

Detected items	Engine operating condition in fail-safe mode
Malfunction A	ECM controls the electric throttle actuator by regulating the throttle opening around the idle position. The engine speed will not rise more than 2,000 rpm.
Malfunction B	ECM controls the electric throttle control actuator by regulating the throttle opening to 20 degrees or less.
Malfunction C	While the vehicle is driving, it slows down gradually by fuel cut. After the vehicle stops, the engine stalls. The engine can restart in N or P position (CVT), neutral (M/T), and engine speed will not exceed 1,000 rpm or more.

DTC Confirmation Procedure

INFOID:0000000005286187

NOTE:
- **Perform PROCEDURE FOR MALFUNCTION A AND B first. If the DTC cannot be confirmed, perform PROCEDURE FOR MALFUNCTION C.**
- If DTC Confirmation Procedure has been previously conducted, always turn ignition switch OFF and wait at least 10 seconds before conducting the next test.

PROCEDURE FOR MALFUNCTION A AND B

1. Turn ignition switch ON and wait at least 1 second.
2. Set selector lever to D position (CVT) or 1st position (M/T), and wait at least 3 seconds.
3. Set selector lever to P or N position (CVT) or Neutral position (M/T).
4. Turn ignition switch OFF and wait at least 10 seconds.
5. Turn ignition switch ON and wait at least 1 second.
6. Set selector lever to D position (CVT) or 1st position (M/T), and wait at least 3 seconds.
7. Set selector lever to P or N position (CVT) or Neutral position (M/T).
8. Turn ignition switch OFF, wait at least 10 seconds, and then turn ON.
9. Check DTC.
10. If DTC is detected, go to EC-1600, "Diagnosis Procedure".

PROCEDURE FOR MALFUNCTION C

1. Turn ignition switch ON and wait at least 1 second.
2. Set selector lever to D position (CVT) or 1st position (M/T) and wait at least 3 seconds.

3. Set selector lever to P or N position (CVT) or Neutral (M/T) position.
4. Start engine and let it idle for 3 seconds.
5. Check DTC.
6. If DTC is detected, go to EC-1600, "Diagnosis Procedure".

Diagnosis Procedure

INFOID:0000000005286188

1. CHECK ELECTRIC THROTTLE CONTROL ACTUATOR VISUALLY

1. Turn ignition switch OFF.
2. Remove the intake air duct.
3. Check if a foreign matter is caught between the throttle valve (1) and the housing.

- ⇦: Vehicle front
- Electric throttle control actuator (2)

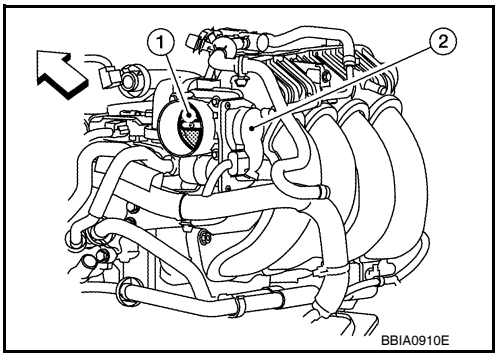

OK or NG

OK >> GO TO 2.
NG >> Remove the foreign matter and clean the electric throttle control actuator inside.

2. REPLACE ELECTRIC THROTTLE CONTROL ACTUATOR

1. Replace the electric throttle control actuator.
2. Perform EC-1193, "Throttle Valve Closed Position Learning".
3. Perform EC-1193, "Idle Air Volume Learning".

>> **INSPECTION END**

DTC P2122, P2123 APP SENSOR

Component Description

INFOID:0000000005286189

The accelerator pedal position sensor is installed on the upper end of the accelerator pedal assembly. The sensor detects the accelerator position and sends a signal to the ECM.
Accelerator pedal position sensor has two sensors. These sensors are a kind of potentiometer which transform the accelerator pedal position into output voltage, and emit the voltage signal to the ECM. In addition, these sensors detect the opening and closing speed of the accelerator pedal and sends voltage signals to the ECM. The ECM judges the current opening angle of the accelerator pedal from these signals and controls the throttle control motor based on these signals.

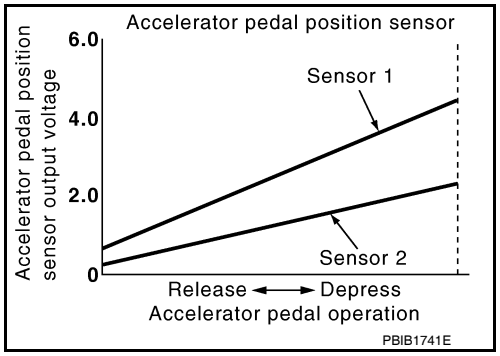

Idle position of the accelerator pedal is determined by the ECM receiving the signal from the accelerator pedal position sensor. The ECM uses this signal for engine operations such as fuel cut.

CONSULT-III Reference Value in Data Monitor Mode

INFOID:0000000005286190

Specification data are reference values.

Monitor item	Condition		Specification
ACCEL SEN 1	• Ignition switch: ON (Engine stopped) • Selector lever: D (CVT), 1st (M/T)	Accelerator pedal: Fully released	0.6 - 0.9 V
		Accelerator pedal: Fully depressed	4.0 - 4.8 V
ACCEL SEN 2*	• Ignition switch: ON (Engine stopped) • Selector lever: D (CVT), 1st (M/T)	Accelerator pedal: Fully released	0.6 - 0.9 V
		Accelerator pedal: Fully depressed	3.9 - 4.8 V
CLSD THL POS	• Ignition switch: ON (Engine stopped)	Accelerator pedal: Fully released	ON
		Accelerator pedal: Slightly depressed	OFF

*: Accelerator pedal position sensor 2 signal is converted by ECM internally. Thus, it differs from ECM terminal voltage.

On Board Diagnosis Logic

INFOID:0000000005286191

These self-diagnoses have the one trip detection logic.
NOTE:
If DTC P2122 or P2123 is displayed with DTC P0643, first perform the trouble diagnosis for DTC P0643. Refer to EC-1530.

DTC No.	Trouble diagnosis name	DTC detecting condition	Possible cause
P2122 2122	Accelerator pedal position sensor 1 circuit low input	An excessively low voltage from the APP sensor 1 is sent to ECM.	• Harness or connectors (APP sensor 1 circuit is open or shorted.) • Accelerator pedal position sensor (APP sensor 1)
P2123 2123	Accelerator pedal position sensor 1 circuit high input	An excessively high voltage from the APP sensor 1 is sent to ECM.	

FAIL-SAFE MODE

When the malfunction is detected, ECM enters fail-safe mode and the MIL illuminates.

Engine operating condition in fail-safe mode
The ECM controls the electric throttle control actuator in regulating the throttle opening in order for the idle position to be within +10 degrees. The ECM regulates the opening speed of the throttle valve to be slower than the normal condition. So, the acceleration will be poor.

DTC Confirmation Procedure

INFOID:0000000005286192

NOTE:

If DTC Confirmation Procedure has been previously conducted, always turn ignition switch OFF and wait at least 10 seconds before conducting the next test.

TESTING CONDITION:

Before performing the following procedure, confirm that battery voltage is more than 8 V at idle.

1. Start engine and let it idle for 1 second.
2. Check DTC.
3. If DTC is detected, go to EC-1603, "Diagnosis Procedure".

Wiring Diagram

INFOID:0000000005286193

EC-APPS1-01

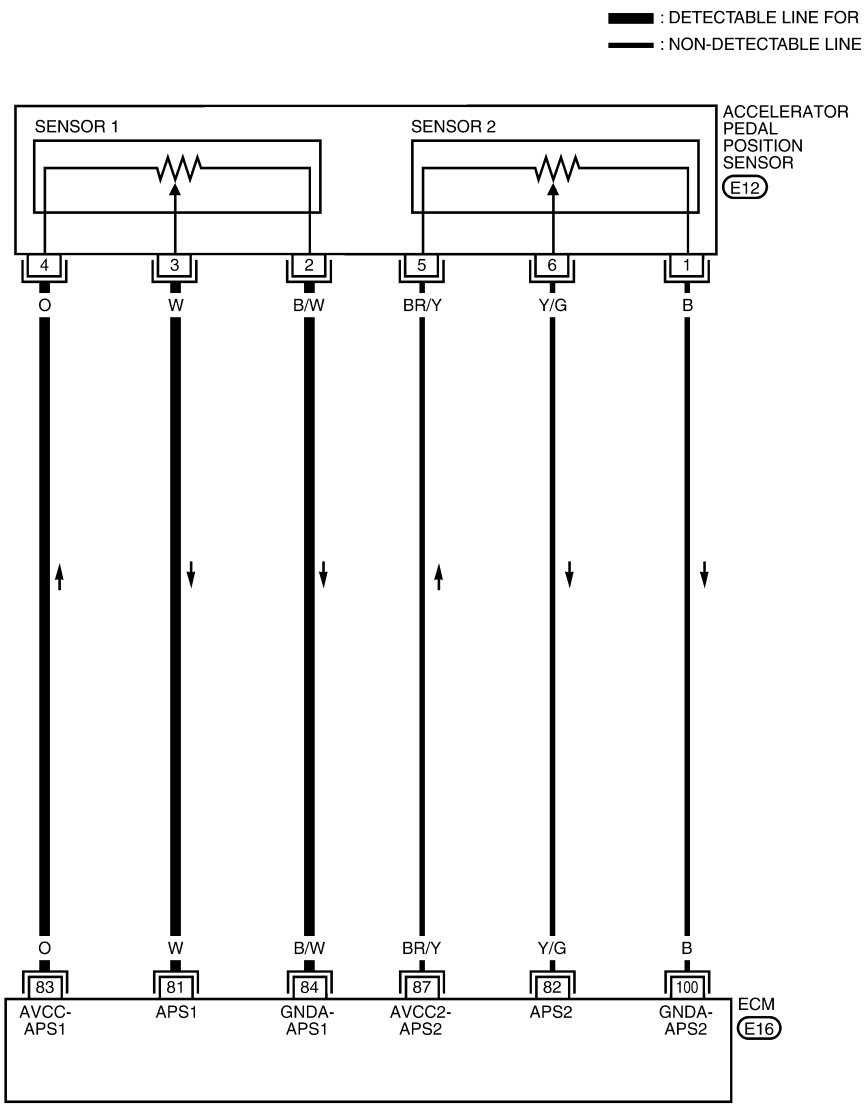

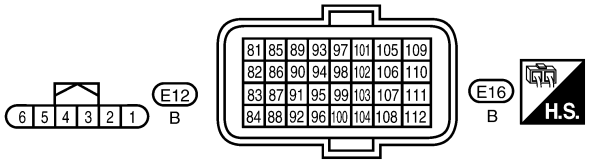

BBWA3056E

Specification data are reference values and are measured between each terminal and ground.

CAUTION:

Never use ECM ground terminals when measuring input/output voltage. Doing so may result in damage to the ECM's transistor. Use a ground other than ECM terminals, such as the ground.

TERMINAL NO.	WIRE COLOR	ITEM	CONDITION	DATA (DC Voltage)
81	W	Accelerator pedal position sensor 1	**[Ignition switch: ON]** • Engine stopped • Accelerator pedal: Fully released	0.6 - 0.9 V
			[Ignition switch: ON] • Engine stopped • Accelerator pedal: Fully depressed	3.9 - 4.7 V
82	Y/G	Accelerator pedal position sensor 2	**[Ignition switch: ON]** • Engine stopped • Accelerator pedal: Fully released	0.3 - 0.6 V
			[Ignition switch: ON] • Engine stopped • Accelerator pedal: Fully depressed	1.95 - 2.4 V
83	O	Sensor power supply (APP sensor 1)	**[Ignition switch: ON]**	Approximately 5 V
84	B/W	Sensor ground (APP sensor 1)	**[Engine is running]** • **Warm-up condition** • Idle speed	Approximately 0 V
87	BR/Y	Sensor power supply (APP sensor 2)	**[Ignition switch: ON]**	Approximately 5 V
100	B	Sensor ground (APP sensor 2)	**[Engine is running]** • **Warm-up condition** • Idle speed	Approximately 0 V

Diagnosis Procedure

INFOID:0000000005286194

1. CHECK GROUND CONNECTIONS

1. Turn ignition switch OFF.
2. Loosen and retighten ground screws on the body.
   Refer to EC-1251, "Ground Inspection".

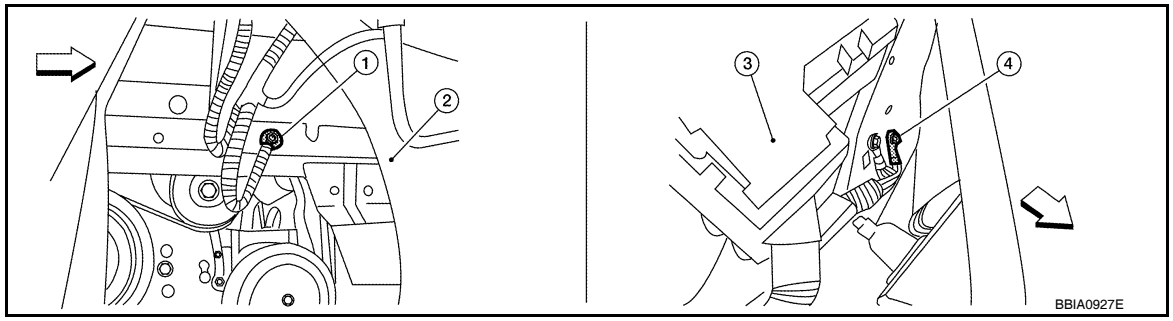

⇦: Vehicle front

1. Body ground E9 (view with front wheel RH and fender protector RH removed.)
2. Washer tank
3. Fuse and fusible link box
4. Body ground E15

OK or NG

OK >> GO TO 2.
NG >> Repair or replace ground connections.

2. CHECK APP SENSOR 1 POWER SUPPLY CIRCUIT

1. Disconnect accelerator pedal position (APP) sensor (1) harness connector.
2. Turn ignition switch ON.

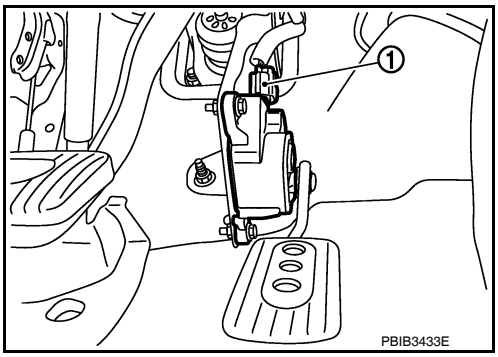

3. Check voltage between APP sensor terminal 4 and ground with CONSULT-III or tester.

Voltage: Approximately 5 V

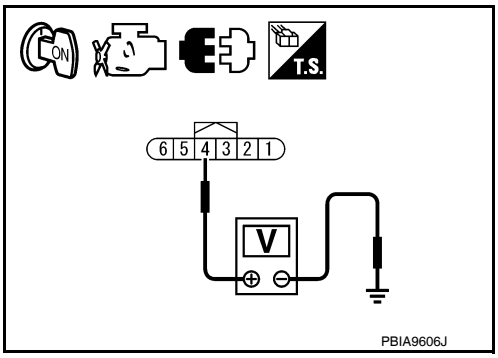

OK or NG

OK >> GO TO 3.
NG >> Repair open circuit or short to ground or short to power in harness or connectors.

3. CHECK APP SENSOR 1 GROUND CIRCUIT FOR OPEN AND SHORT

1. Turn ignition switch OFF.
2. Disconnect ECM harness connector.
3. Check harness continuity between ECM terminal 84 and APP sensor terminal 2. Refer to Wiring Diagram.

Continuity should exist.

4. Also check harness for short to ground and short to power.

OK or NG

OK >> GO TO 4.
NG >> Repair open circuit or short to ground or short to power in harness or connectors.

4. CHECK APP SENSOR 1 INPUT SIGNAL CIRCUIT FOR OPEN AND SHORT

1. Check harness continuity between ECM terminal 81 and APP sensor terminal 3. Refer to Wiring Diagram.

Continuity should exist.

2. Also check harness for short to ground and short to power.

OK or NG

OK >> GO TO 5.
NG >> Repair open circuit or short to ground or short to power in harness or connectors.

5. CHECK APP SENSOR

Refer to EC-1605, "Component Inspection".

OK or NG

OK >> GO TO 7.
NG >> GO TO 6.

6. REPLACE ACCELERATOR PEDAL ASSEMBLY

1. Replace accelerator pedal assembly.
2. Perform EC-1193, "Accelerator Pedal Released Position Learning".
3. Perform EC-1193, "Throttle Valve Closed Position Learning".
4. Perform EC-1193, "Idle Air Volume Learning".

>> **INSPECTION END**

7. CHECK INTERMITTENT INCIDENT

Refer to EC-1245.

>> **INSPECTION END**

Component Inspection

INFOID:0000000005286195

ACCELERATOR PEDAL POSITION SENSOR

1. Reconnect all harness connectors disconnected.
2. Turn ignition switch ON.
3. Check voltage between ECM terminals 81 (APP sensor 1 signal), 82 (APP sensor 2 signal) and ground under the following conditions.

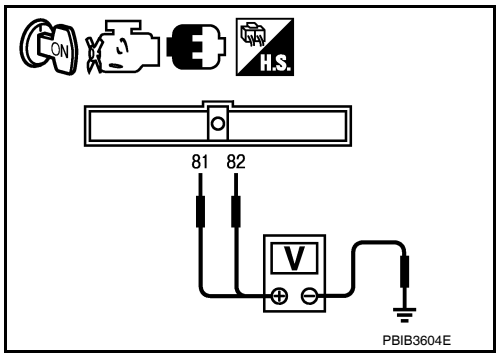

Terminal	Accelerator pedal	Voltage
81 (Accelerator pedal position sensor 1)	Fully released	0.6 - 0.9 V
	Fully depressed	3.9 - 4.7 V
82 (Accelerator pedal position sensor 2)	Fully released	0.3 - 0.6 V
	Fully depressed	1.95 - 2.4 V

4. If NG, replace accelerator pedal assembly and go to next step.
5. Perform EC-1193, "Accelerator Pedal Released Position Learning".
6. Perform EC-1193, "Throttle Valve Closed Position Learning".
7. Perform EC-1193, "Idle Air Volume Learning".

Removal and Installation

INFOID:0000000005286196

ACCELERATOR PEDAL

Refer to ACC-4.

DTC P2127, P2128 APP SENSOR

Component Description

INFOID:0000000005286197

The accelerator pedal position sensor is installed on the upper end of the accelerator pedal assembly. The sensor detects the accelerator position and sends a signal to the ECM.
Accelerator pedal position sensor has two sensors. These sensors are a kind of potentiometer which transform the accelerator pedal position into output voltage, and emit the voltage signal to the ECM. In addition, these sensors detect the opening and closing speed of the accelerator pedal and sends voltage signals to the ECM. The ECM judges the current opening angle of the accelerator pedal from these signals and controls the throttle control motor based on these signals.

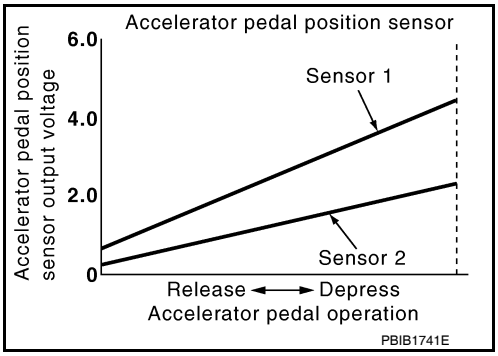

Idle position of the accelerator pedal is determined by the ECM receiving the signal from the accelerator pedal position sensor. The ECM uses this signal for engine operations such as fuel cut.

CONSULT-III Reference Value in Data Monitor Mode

INFOID:0000000005286198

Specification data are reference values.

Monitor item	Condition		Specification
ACCEL SEN 1	• Ignition switch: ON (Engine stopped)	Accelerator pedal: Fully released	0.6 - 0.9 V
		Accelerator pedal: Fully depressed	4.0 - 4.8 V
ACCEL SEN 2*	• Ignition switch: ON (Engine stopped)	Accelerator pedal: Fully released	0.6 - 0.9 V
		Accelerator pedal: Fully depressed	3.9 - 4.8 V
CLSD THL POS	• Ignition switch: ON (Engine stopped)	Accelerator pedal: Fully released	ON
		Accelerator pedal: Slightly depressed	OFF

*: Accelerator pedal position sensor 2 signal is converted by ECM internally. Thus, it differs from ECM terminal voltage.

On Board Diagnosis Logic

INFOID:0000000005286199

These self-diagnoses have the one trip detection logic.

DTC No.	Trouble diagnosis name	DTC detecting condition	Possible cause
P2127 2127	Accelerator pedal position sensor 2 circuit low input	An excessively low voltage from the APP sensor 2 is sent to ECM.	• Harness or connectors (APP sensor 2 circuit is open or shorted.) [Crankshaft position sensor (POS) circuit is shorted.] (Refrigerant pressure sensor circuit is shorted.) (EVAP control system pressure sensor circuit is shorted.) • Accelerator pedal position sensor (APP sensor 2) • Crankshaft position sensor (POS) • Refrigerant pressure sensor • EVAP control system pressure sensor
P2128 2128	Accelerator pedal position sensor 2 circuit high input	An excessively high voltage from the APP sensor 2 is sent to ECM.	

FAIL-SAFE MODE

When the malfunction is detected, ECM enters fail-safe mode and the MIL illuminates.

Engine operating condition in fail-safe mode
The ECM controls the electric throttle control actuator in regulating the throttle opening in order for the idle position to be within +10 degrees. The ECM regulates the opening speed of the throttle valve to be slower than the normal condition. So, the acceleration will be poor.

DTC Confirmation Procedure

INFOID:0000000005286200

NOTE:
If DTC Confirmation Procedure has been previously conducted, always turn ignition switch OFF and wait at least 10 seconds before conducting the next test.

TESTING CONDITION:
Before performing the following procedure, confirm that battery voltage is more than 8 V at idle.

1. Start engine and let it idle for 1 second.
2. Check DTC.
3. If DTC is detected, go to EC-1609, "Diagnosis Procedure".

Wiring Diagram

INFOID:0000000005286201

EC-APPS2-01

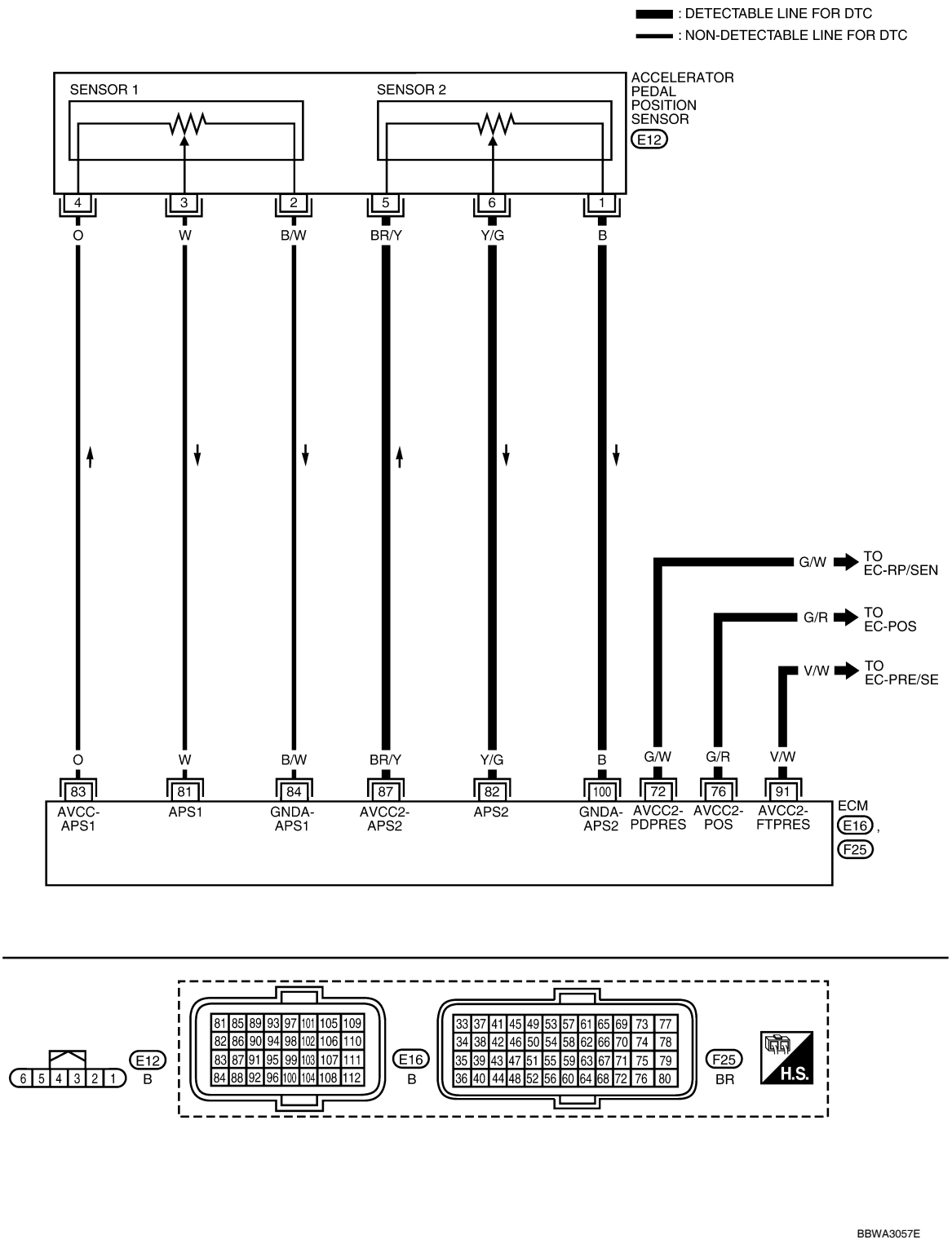

Specification data are reference values and are measured between each terminal and ground.

CAUTION:

Never use ECM ground terminals when measuring input/output voltage. Doing so may result in damage to the ECM's transistor. Use a ground other than ECM terminals, such as the ground.

TERMINAL NO.	WIRE COLOR	ITEM	CONDITION	DATA (DC Voltage)
72	G/W	Sensor power supply (Refrigerant pressure sensor)	**[Ignition switch: ON]**	Approximately 5 V
76	G/R	Sensor power supply [Crankshaft position sensor (POS)]	**[Ignition switch: ON]**	Approximately 5 V
81	W	Accelerator pedal position sensor 1	**[Ignition switch: ON]** • Engine stopped • Accelerator pedal: Fully released	0.6 - 0.9 V
			[Ignition switch: ON] • Engine stopped • Accelerator pedal: Fully depressed	3.9 - 4.7 V
82	Y/G	Accelerator pedal position sensor 2	**[Ignition switch: ON]** • Engine stopped • Accelerator pedal: Fully released	0.3 - 0.6 V
			[Ignition switch: ON] • Engine stopped • Accelerator pedal: Fully depressed	1.95 - 2.4 V
83	O	Sensor power supply (APP sensor 1)	**[Ignition switch: ON]**	Approximately 5 V
84	B/W	Sensor ground (APP sensor 1)	**[Engine is running]** • **Warm-up condition** • Idle speed	Approximately 0 V
87	BR/Y	Sensor power supply (APP sensor 2)	**[Ignition switch: ON]**	Approximately 5 V
91	V/W	EVAP control system pressure sensor power supply	**[Ignition switch: ON]**	Approximately 5 V
100	B	Sensor ground (APP sensor 2)	**[Engine is running]** • **Warm-up condition** • Idle speed	Approximately 0 V

Diagnosis Procedure

INFOID:0000000005286202

1. CHECK GROUND CONNECTIONS

1. Turn ignition switch OFF.
2. Loosen and retighten ground screws on the body.
   Refer to EC-1251, "Ground Inspection".

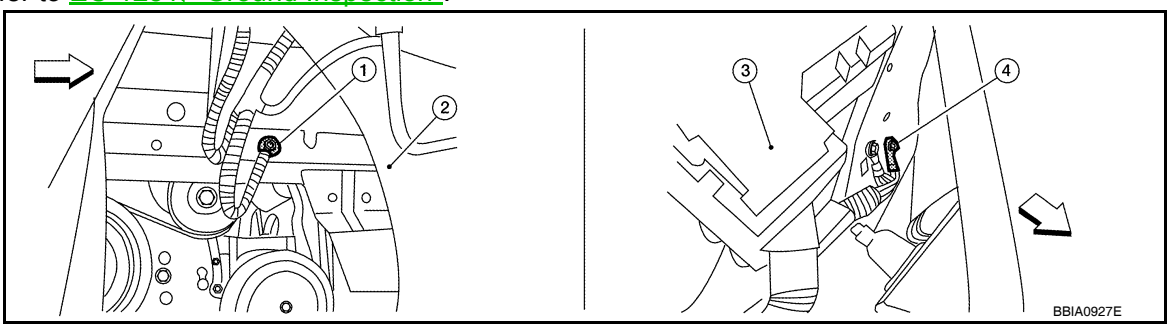

⇦: Vehicle front

1. Body ground E9 (view with front wheel RH and fender protector RH removed.)
2. Washer tank
3. Fuse and fusible link box
4. Body ground E15

OK or NG

OK >> GO TO 2.
NG >> Repair or replace ground connections.

2. CHECK APP SENSOR 2 POWER SUPPLY CIRCUIT-I

1. Disconnect accelerator pedal position (APP) sensor (1) harness connector.
2. Turn ignition switch ON.

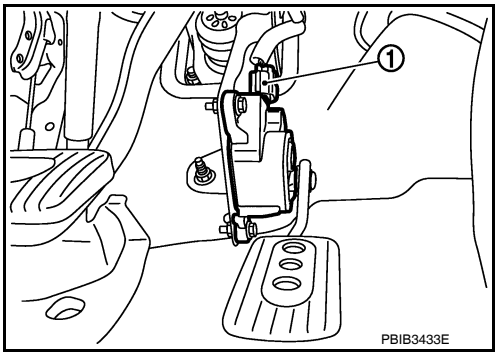

3. Check voltage between APP sensor terminal 5 and ground with CONSULT-III or tester.

Voltage: Approximately 5 V

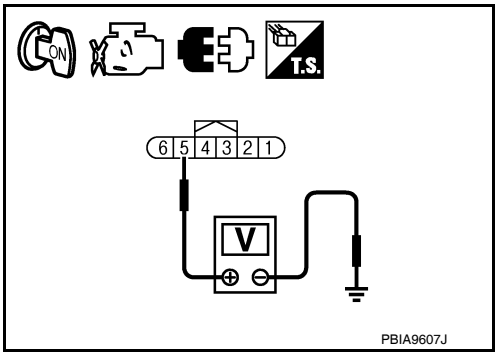

OK or NG

OK >> GO TO 6.
NG >> GO TO 3.

3. CHECK APP SENSOR 2 POWER SUPPLY CIRCUIT-II

1. Turn ignition switch OFF.
2. Disconnect ECM harness connector.
3. Check harness continuity between APP sensor terminal 5 and ECM terminal 87. Refer to Wiring Diagram.

Continuity should exist.

OK or NG

OK >> GO TO 4.
NG >> Repair open circuit.

4. CHECK APP SENSOR 2 POWER SUPPLY CIRCUIT-III

Check harness for short to power and short to ground, between the following terminals.

ECM terminal	Sensor terminal	Reference Wiring Diagram
72	Refrigerant pressure sensor terminal 3	EC-1667, "Wiring Diagram"
76	Crankshaft position sensor (POS) terminal 1	EC-1426, "Wiring Diagram"
87	APP sensor terminal 5	EC-1608, "Wiring Diagram"
91	EVAP control system pressure sensor terminal 3	EC-1484, "Wiring Diagram"

OK or NG

OK >> GO TO 5.
NG >> Repair short to ground or short to power in harness or connectors.

5. CHECK COMPONENTS

Check the following.
- Crankshaft position sensor (POS) (Refer to EC-1430, "Component Inspection".)
- Refrigerant pressure sensor (Refer to MTC-27.)

- EVAP control system pressure (Refer to EC-1488, "Component Inspection".)

OK or NG

OK >> GO TO 10.
NG >> Replace malfunctioning component.

6. CHECK APP SENSOR 2 GROUND CIRCUIT FOR OPEN AND SHORT

1. Turn ignition switch OFF.
2. Disconnect ECM harness connector.
3. Check harness continuity between ECM terminal 100 and APP sensor terminal 1.
   Refer to Wiring Diagram.

   Continuity should exist.

4. Also check harness for short to ground and short to power.

OK or NG

OK >> GO TO 7.
NG >> Repair open circuit or short to ground or short to power in harness or connectors.

7. CHECK APP SENSOR 2 INPUT SIGNAL CIRCUIT FOR OPEN AND SHORT

1. Check harness continuity between ECM terminal 82 and APP sensor terminal 6.
   Refer to Wiring Diagram.

   Continuity should exist.

2. Also check harness for short to ground and short to power.

OK or NG

OK >> GO TO 8.
NG >> Repair open circuit or short to ground or short to power in harness or connectors.

8. CHECK APP SENSOR

Refer to EC-1611, "Component Inspection".

OK or NG

OK >> GO TO 10.
NG >> GO TO 9.

9. REPLACE ACCELERATOR PEDAL ASSEMBLY

1. Replace accelerator pedal assembly.
2. Perform EC-1193, "Accelerator Pedal Released Position Learning".
3. Perform EC-1193, "Throttle Valve Closed Position Learning".
4. Perform EC-1193, "Idle Air Volume Learning".

>> **INSPECTION END**

10. CHECK INTERMITTENT INCIDENT

Refer to EC-1245.

>> **INSPECTION END**

Component Inspection

INFOID:0000000005286203

ACCELERATOR PEDAL POSITION SENSOR

1. Reconnect all harness connectors disconnected.
2. Turn ignition switch ON.

3. Check voltage between ECM terminals 81 (APP sensor 1 signal), 82 (APP sensor 2 signal) and ground under the following conditions.

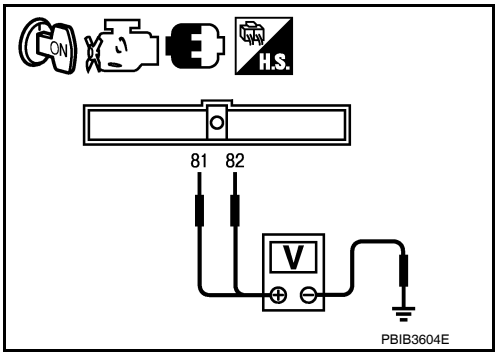

Terminal	Accelerator pedal	Voltage
81 (Accelerator pedal position sensor 1)	Fully released	0.6 - 0.9 V
	Fully depressed	3.9 - 4.7 V
82 (Accelerator pedal position sensor 2)	Fully released	0.3 - 0.6 V
	Fully depressed	1.95 - 2.4 V

4. If NG, replace accelerator pedal assembly and go to next step.
5. Perform EC-1193, "Accelerator Pedal Released Position Learning".
6. Perform EC-1193, "Throttle Valve Closed Position Learning".
7. Perform EC-1193, "Idle Air Volume Learning".

Removal and Installation

INFOID:0000000005286204

ACCELERATOR PEDAL

Refer to ACC-4.

DTC P2135 TP SENSOR

Component Description

INFOID:0000000005286205

Electric throttle control actuator consists of throttle control motor, throttle position sensor, etc. The throttle position sensor responds to the throttle valve movement.
The throttle position sensor has two sensors. These sensors are a kind of potentiometers which transform the throttle valve position into output voltage, and emit the voltage signal to the ECM. The ECM judges the current opening angle of the throttle valve from these signals and controls the throttle valve opening signal in response to driving conditions via the throttle control motor.

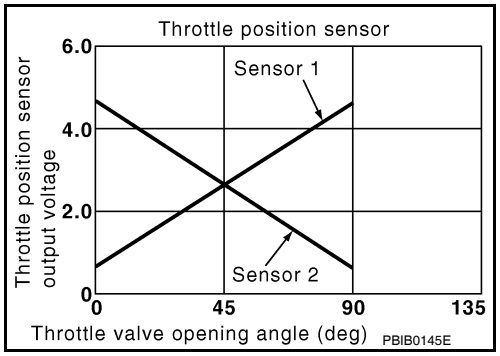

CONSULT-III Reference Value in Data Monitor Mode

INFOID:0000000005286206

Specification data are reference values.

Monitor item	Condition		Specification
TP SEN 1-B1 TP SEN 2-B2*	• Ignition switch: ON (Engine stopped)	Accelerator pedal: Fully released	More than 0.36 V
	• Selector lever: D (CVT), 1st (M/T)	Accelerator pedal: Fully depressed	Less than 4.75 V

*: Throttle position sensor 2 signal is converted by ECM internally. Thus, it differs from ECM terminal voltage signal.

On Board Diagnosis Logic

INFOID:0000000005286207

This self-diagnosis has the one trip detection logic.
NOTE:
If DTC P2135 is displayed with DTC P0643, first perform the trouble diagnosis for DTC P0643.
Refer to EC-1530.

DTC No.	Trouble diagnosis name	DTC detecting condition	Possible cause
P2135 2135	Throttle position sensor circuit range/performance	Rationally incorrect voltage is sent to ECM compared with the signals from TP sensor 1 and TP sensor 2.	• Harness or connector (TP sensor 1 or 2 circuit is open or shorted.) • Electric throttle control actuator (TP sensor 1 or 2)

FAIL-SAFE MODE

When the malfunction is detected, the ECM enters fail-safe mode and the MIL illuminates.

Engine operation condition in fail-safe mode
The ECM controls the electric throttle control actuator in regulating the throttle opening in order for the idle position to be within +10 degrees. The ECM regulates the opening speed of the throttle valve to be slower than the normal condition. So, the acceleration will be poor.

DTC Confirmation Procedure

INFOID:0000000005286208

NOTE:
If DTC Confirmation Procedure has been previously conducted, always turn ignition switch OFF and wait at least 10 seconds before conducting the next test.
TESTING CONDITION:
Before performing the following procedure, confirm that battery voltage is more than 8 V at idle.

1. Start engine and let it idle for 1 second.
2. Check DTC.
3. If DTC is detected, go to EC-1615, "Diagnosis Procedure".

Wiring Diagram

INFOID:0000000005286209

EC-TPS3-01

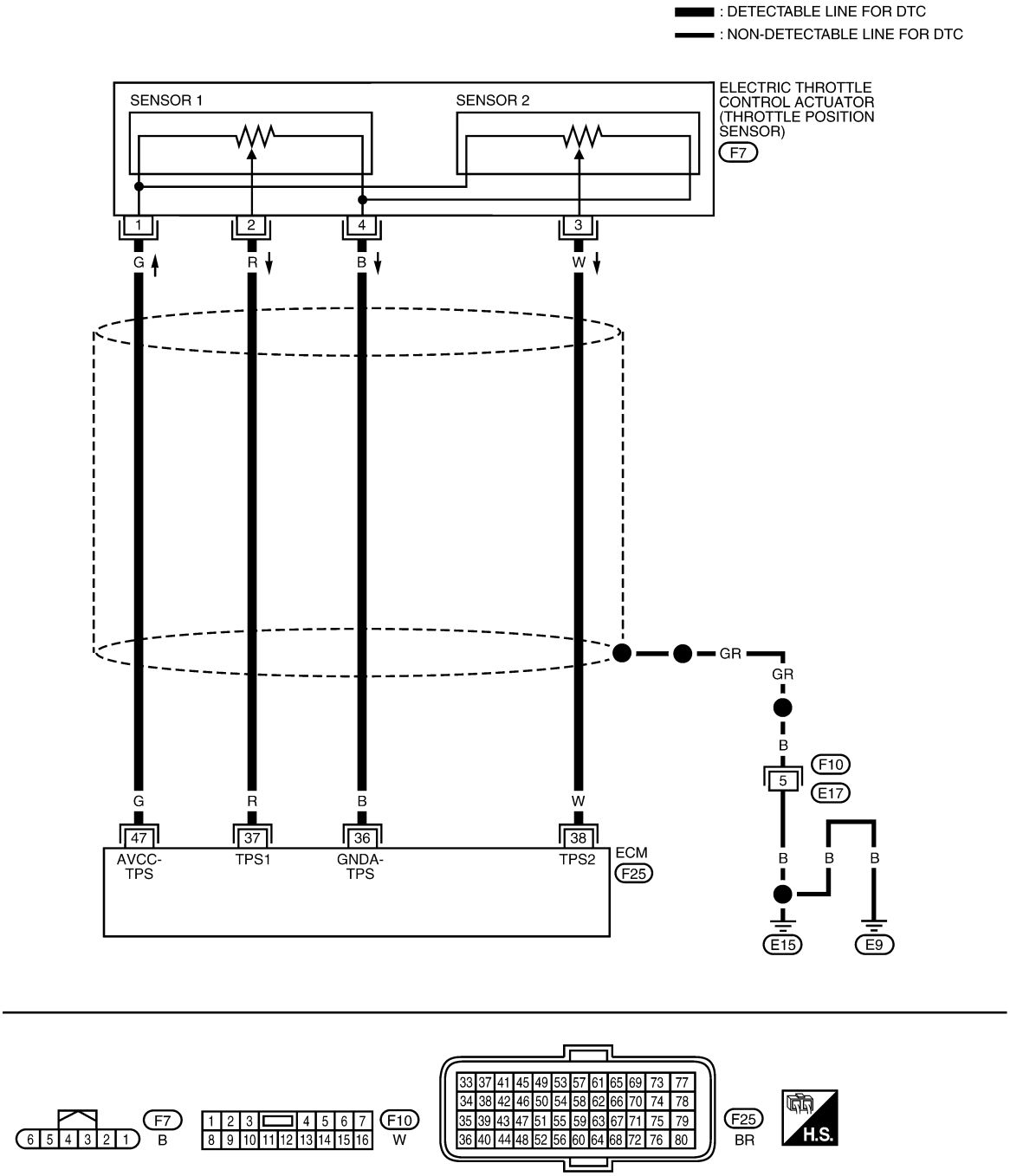

Specification data are reference values and are measured between each terminal and ground.

CAUTION:

Never use ECM ground terminals when measuring input/output voltage. Doing so may result in damage to the ECM's transistor. Use a ground other than ECM terminals, such as the ground.

TERMINAL NO.	WIRE COLOR	ITEM	CONDITION	DATA (DC Voltage)
36	B	Sensor ground (Throttle position sensor)	**[Engine is running]** • **Warm-up condition** • Idle speed	Approximately 0 V
37	R	Throttle position sensor 1	**[Ignition switch: ON]** • Engine stopped • Selector lever: D (CVT), 1st (M/T) • Accelerator pedal: Fully released	More than 0.36 V
			[Ignition switch: ON] • Engine stopped • Selector lever: D (CVT), 1st (M/T) • Accelerator pedal: Fully depressed	Less than 4.75 V
38	W	Throttle position sensor 2	**[Ignition switch: ON]** • Engine stopped • Selector lever: D (CVT), 1st (M/T) • Accelerator pedal: Fully released	Less than 4.75 V
			[Ignition switch: ON] • Engine stopped • Selector lever: D (CVT), 1st (M/T) • Accelerator pedal: Fully depressed	More than 0.36 V
47	G	Sensor power supply (Throttle position sensor)	**[Ignition switch: ON]**	Approximately 5 V

Diagnosis Procedure

INFOID:0000000005286210

1. CHECK GROUND CONNECTIONS

1. Turn ignition switch OFF.
2. Loosen and retighten ground screws on the body.
   Refer to EC-1251, "Ground Inspection".

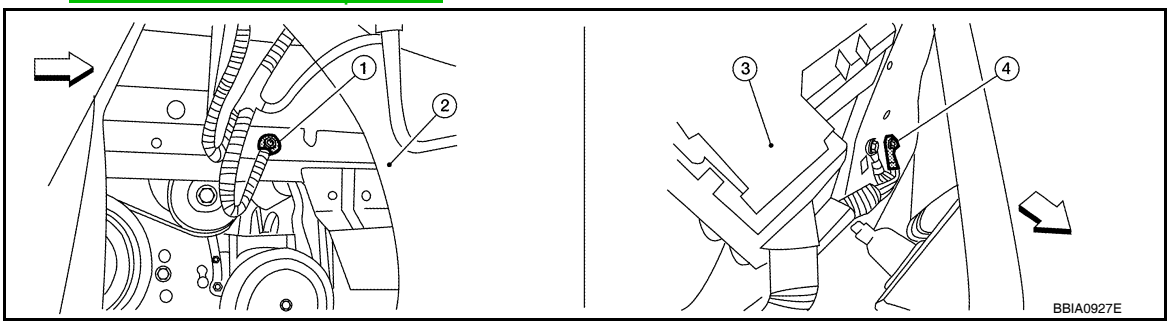

⇦: Vehicle front

1. Body ground E9 (view with front wheel RH and fender protector RH removed.)
2. Washer tank
3. Fuse and fusible link box
4. Body ground E15

OK or NG

OK >> GO TO 2.
NG >> Repair or replace ground connections.

2. CHECK THROTTLE POSITION SENSOR POWER SUPPLY CIRCUIT

1. Disconnect electric throttle control actuator harness connector (1).
- ⇦: Vehicle front
2. Turn ignition switch ON.

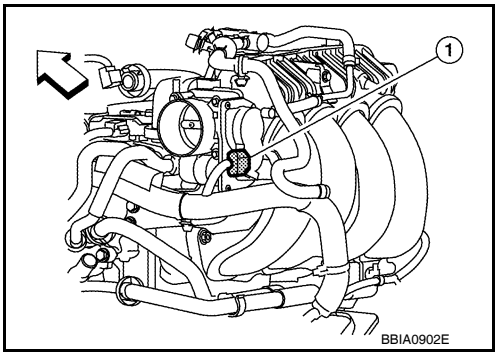

3. Check voltage between electric throttle control actuator terminal 1 and ground with CONSULT-III or tester.

Voltage: Approximately 5 V

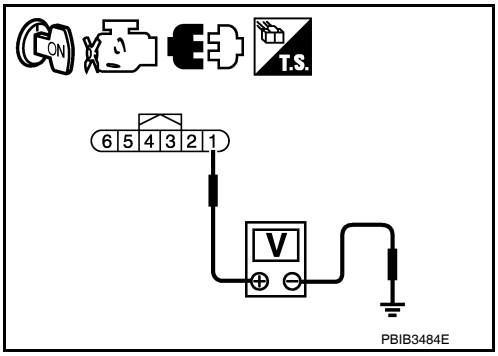

OK or NG

OK >> GO TO 3.
NG >> Repair open circuit or short to ground or short to power in harness or connectors.

3. CHECK THROTTLE POSITION SENSOR GROUND CIRCUIT FOR OPEN AND SHORT

1. Turn ignition switch OFF.
2. Disconnect ECM harness connector.
3. Check harness continuity between electric throttle control actuator terminal 4 and ECM terminal 36. Refer to Wiring Diagram.

Continuity should exist.

4. Also check harness for short to ground and short to power.

OK or NG

OK >> GO TO 4.
NG >> Repair open circuit or short to ground or short to power in harness or connectors.

4. CHECK THROTTLE POSITION SENSOR INPUT SIGNAL CIRCUIT FOR OPEN AND SHORT

1. Check harness continuity between the following;
electric throttle control actuator terminal 2 and ECM terminal 37,
electric throttle control actuator terminal 3 and ECM terminal 38.
Refer to Wiring Diagram.

Continuity should exist.

2. Also check harness for short to ground and short to power.

OK or NG

OK >> GO TO 5.
NG >> Repair open circuit or short to ground or short to power in harness or connectors.

5. CHECK THROTTLE POSITION SENSOR

Refer to EC-1617, "Component Inspection".

OK or NG

OK >> GO TO 7.
NG >> GO TO 6.

6. REPLACE ELECTRIC THROTTLE CONTROL ACTUATOR

1. Replace the electric throttle control actuator.
2. Perform EC-1193, "Throttle Valve Closed Position Learning".

3. Perform EC-1193, "Idle Air Volume Learning".

>> **INSPECTION END**

7. CHECK INTERMITTENT INCIDENT

Refer to EC-1245.

>> **INSPECTION END**

Component Inspection

INFOID:0000000005286211

THROTTLE POSITION SENSOR

1. Reconnect all harness connectors disconnected.
2. Perform EC-1193, "Throttle Valve Closed Position Learning".
3. Turn ignition switch ON.
4. Set selector lever to D position (CVT) or 1st position (M/T).
5. Check voltage between ECM terminals 37 (TP sensor 1 signal), 38 (TP sensor 2 signal) and ground under the following conditions.

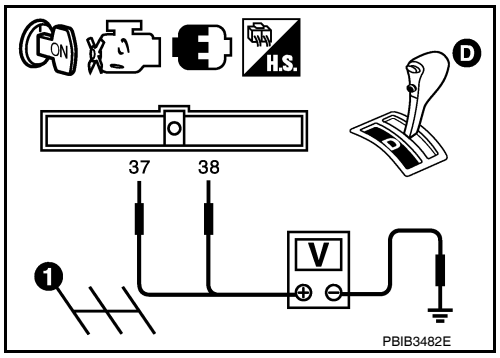

Terminal	Accelerator pedal	Voltage
37 (Throttle position sensor 1)	Fully released	More than 0.36 V
	Fully depressed	Less than 4.75 V
38 (Throttle position sensor 2)	Fully released	Less than 4.75 V
	Fully depressed	More than 0.36 V

6. If NG, replace electric throttle control actuator and go to the next step.
7. Perform EC-1193, "Throttle Valve Closed Position Learning".
8. Perform EC-1193, "Idle Air Volume Learning".

Removal and Installation

INFOID:0000000005286212

ELECTRIC THROTTLE CONTROL ACTUATOR

Refer to EM-135.

DTC P2138 APP SENSOR

Component Description

INFOID:0000000005286213

The accelerator pedal position sensor is installed on the upper end of the accelerator pedal assembly. The sensor detects the accelerator position and sends a signal to the ECM.
Accelerator pedal position sensor has two sensors. These sensors are a kind of potentiometers which transform the accelerator pedal position into output voltage, and emit the voltage signal to the ECM. In addition, these sensors detect the opening and closing speed of the accelerator pedal and feed the voltage signals to the ECM. The ECM judges the current opening angle of the accelerator pedal from these signals and controls the throttle control motor based on these signals.

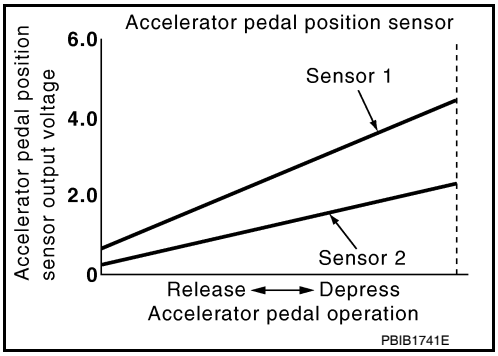

Idle position of the accelerator pedal is determined by the ECM receiving the signal from the accelerator pedal position sensor. The ECM uses this signal for the engine operation such as fuel cut.

CONSULT-III Reference Value in Data Monitor Mode

INFOID:0000000005286214

Specification data are reference values.

Monitor item	Condition		Specification
ACCEL SEN 1	• Ignition switch: ON (Engine stopped)	Accelerator pedal: Fully released	0.6 - 0.9 V
		Accelerator pedal: Fully depressed	4.0 - 4.8 V
ACCEL SEN 2*	• Ignition switch: ON (Engine stopped)	Accelerator pedal: Fully released	0.6 - 0.9 V
		Accelerator pedal: Fully depressed	3.9 - 4.8 V
CLSD THL POS	• Ignition switch: ON (Engine stopped)	Accelerator pedal: Fully released	ON
		Accelerator pedal: Slightly depressed	OFF

*: Accelerator pedal position sensor 2 signal is converted by ECM internally. Thus, it differs from ECM terminal voltage.

On Board Diagnosis Logic

INFOID:0000000005286215

This self-diagnosis has the one trip detection logic.
NOTE:
If DTC P2138 is displayed with DTC P0643, first perform the trouble diagnosis for DTC P0643.
Refer to EC-1530.

DTC No.	Trouble diagnosis name	DTC detecting condition	Possible cause
P2138 2138	Accelerator pedal position sensor circuit range/performance	Rationally incorrect voltage is sent to ECM compared with the signals from APP sensor 1 and APP sensor 2.	• Harness or connector (APP sensor 1 and 2 circuit is open or shorted.) [Crankshaft position sensor (POS) circuit is shorted.] (Refrigerant pressure sensor circuit is shorted.) (EVAP control system pressure sensor circuit is shorted.) • Accelerator pedal position sensor (APP sensor 1 and 2) • Crankshaft position sensor (POS) • Refrigerant pressure sensor • EVAP control system pressure sensor

FAIL-SAFE MODE

When the malfunction is detected, ECM enters fail-safe mode and the MIL illuminates.

Engine operating condition in fail-safe mode
The ECM controls the electric throttle control actuator in regulating the throttle opening in order for the idle position to be within +10 degrees. The ECM regulates the opening speed of the throttle valve to be slower than the normal condition. So, the acceleration will be poor.

DTC Confirmation Procedure

INFOID:0000000005286216

NOTE:
If DTC Confirmation Procedure has been previously conducted, always turn ignition switch OFF and wait at least 10 seconds before conducting the next test.
TESTING CONDITION:
Before performing the following procedure, confirm that battery voltage is more than 8 V at idle.

1. Start engine and let it idle for 1 second.
2. Check DTC.
3. If DTC is detected, go to EC-1621, "Diagnosis Procedure".

Wiring Diagram

INFOID:0000000005286217

EC-APPS3-01

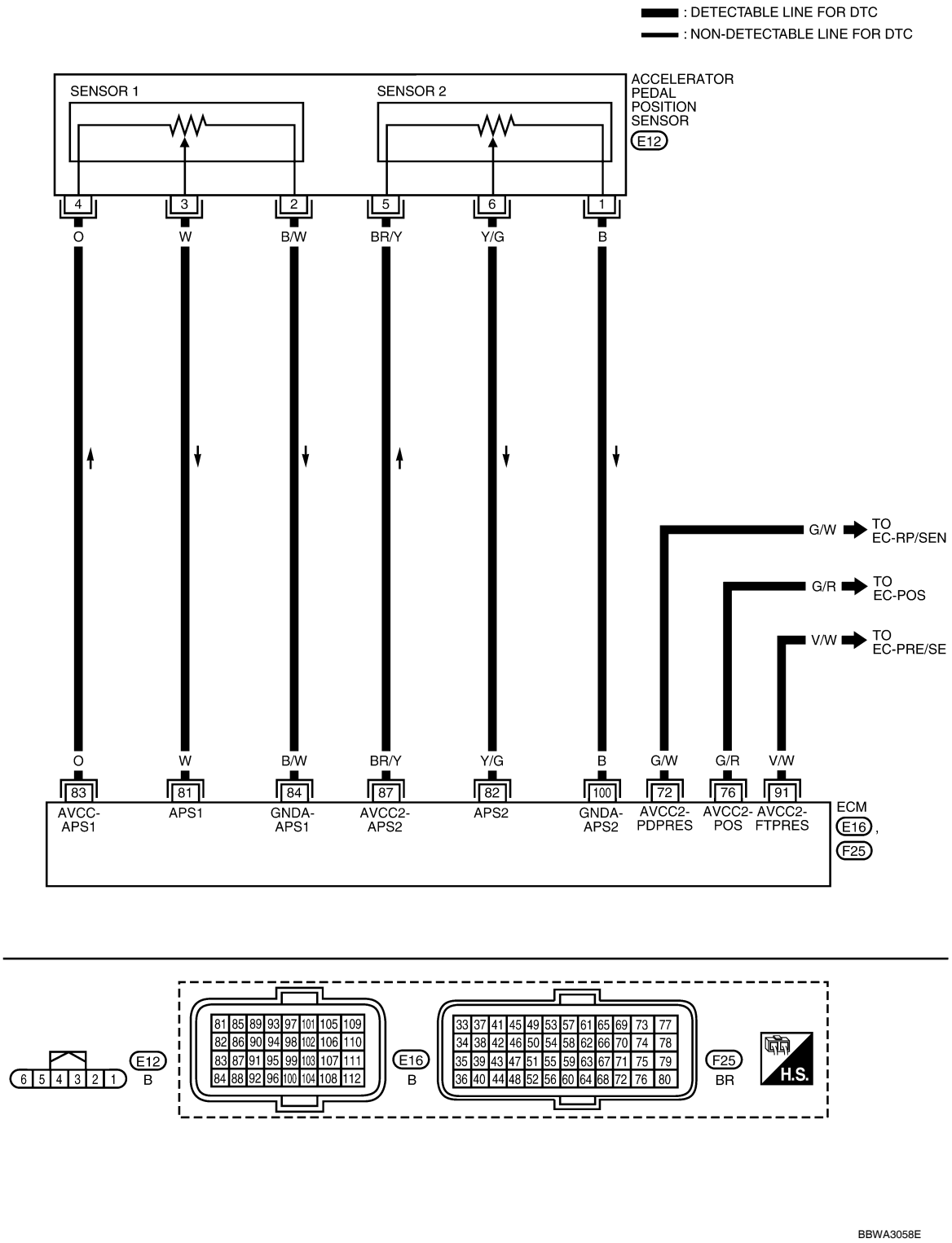

Specification data are reference values and are measured between each terminal and ground.

CAUTION:

Never use ECM ground terminals when measuring input/output voltage. Doing so may result in damage to the ECM's transistor. Use a ground other than ECM terminals, such as the ground.

TERMINAL NO.	WIRE COLOR	ITEM	CONDITION	DATA (DC Voltage)
72	G/W	Sensor power supply (Refrigerant pressure sensor)	**[Ignition switch: ON]**	Approximately 5 V
76	G/R	Sensor power supply [Crankshaft position sensor (POS)]	**[Ignition switch: ON]**	Approximately 5 V
81	W	Accelerator pedal position sensor 1	**[Ignition switch: ON]** • Engine stopped • Accelerator pedal: Fully released	0.6 - 0.9 V
			[Ignition switch: ON] • Engine stopped • Accelerator pedal: Fully depressed	3.9 - 4.7 V
82	Y/G	Accelerator pedal position sensor 2	**[Ignition switch: ON]** • Engine stopped • Accelerator pedal: Fully released	0.3 - 0.6 V
			[Ignition switch: ON] • Engine stopped • Accelerator pedal: Fully depressed	1.95 - 2.4 V
83	O	Sensor power supply (APP sensor 1)	**[Ignition switch: ON]**	Approximately 5 V
84	B/W	Sensor ground (APP sensor 1)	**[Engine is running]** • **Warm-up condition** • Idle speed	Approximately 0 V
87	BR/Y	Sensor power supply (APP sensor 2)	**[Ignition switch: ON]**	Approximately 5 V
91	V/W	EVAP control system pressure sensor power supply	**[Ignition switch: ON]**	Approximately 5 V
100	B	Sensor ground (APP sensor 2)	**[Engine is running]** • **Warm-up condition** • Idle speed	Approximately 0 V

Diagnosis Procedure

INFOID:0000000005286218

1. CHECK GROUND CONNECTIONS

1. Turn ignition switch OFF.
2. Loosen and retighten ground screws on the body.
   Refer to EC-1251, "Ground Inspection".

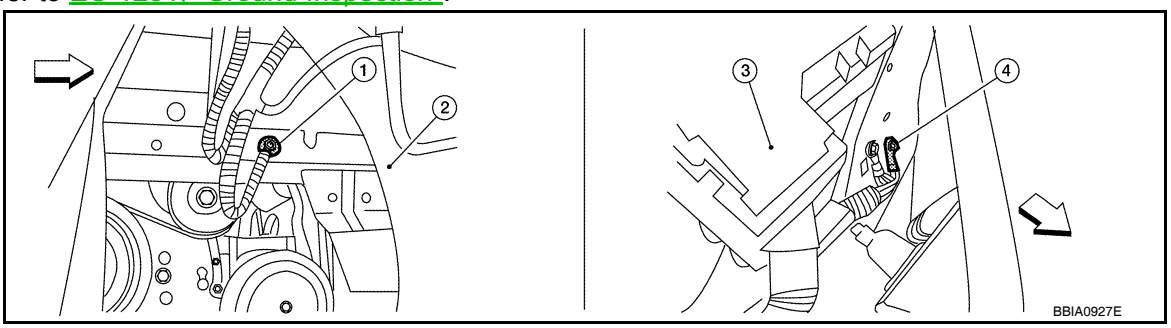

⇦: Vehicle front

1. Body ground E9 (view with front wheel RH and fender protector RH removed.)
2. Washer tank
3. Fuse and fusible link box
4. Body ground E15

OK or NG

OK >> GO TO 2.
NG >> Repair or replace ground connections.

2. CHECK APP SENSOR 1 POWER SUPPLY CIRCUIT

1. Disconnect accelerator pedal position (APP) sensor (1) harness connector.
2. Turn ignition switch ON.

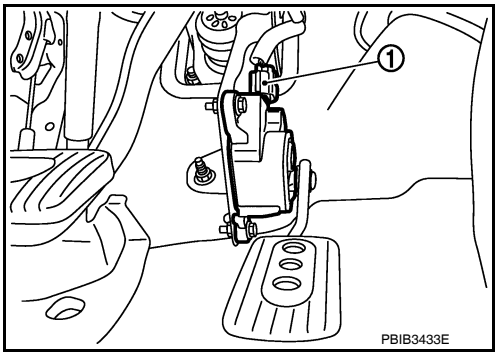

3. Check voltage between APP sensor terminal 4 and ground with CONSULT-III or tester.

Voltage: Approximately 5 V

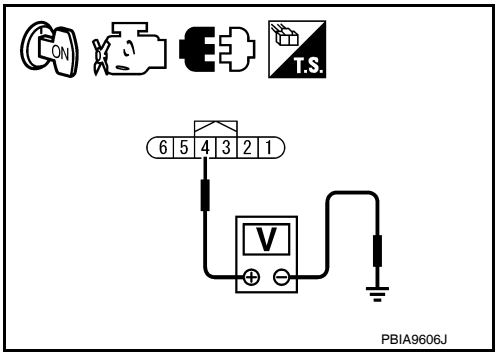

OK or NG

OK >> GO TO 3.
NG >> Repair open circuit or short to ground or short to power in harness or connectors.

3. CHECK APP SENSOR 2 POWER SUPPLY CIRCUIT-I

1. Turn ignition switch ON.
2. Check voltage between APP sensor terminal 5 and ground with CONSULT-III or tester.

Voltage: Approximately 5 V

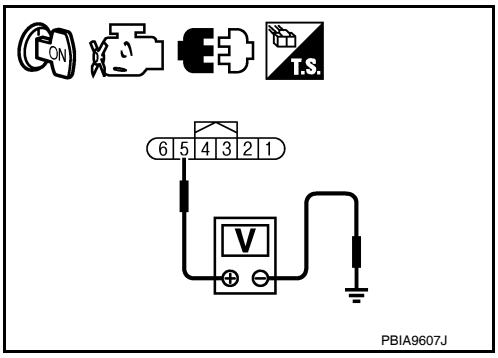

OK or NG

OK >> GO TO 7.
NG >> GO TO 4.

4. CHECK APP SENSOR 2 POWER SUPPLY CIRCUIT-II

1. Turn ignition switch OFF.
2. Disconnect ECM harness connector.
3. Check harness continuity between APP sensor terminal 5 and ECM terminal 87. Refer to Wiring Diagram.

Continuity should exist.

OK or NG

OK >> GO TO 5.
NG >> Repair open circuit.

5. CHECK APP SENSOR 2 POWER SUPPLY CIRCUIT-III

Check harness for short to power and short to ground, between the following terminals.

ECM terminal	Sensor terminal	Reference Wiring Diagram
72	Refrigerant pressure sensor terminal 3	EC-1667, "Wiring Diagram"
76	Crankshaft position sensor (POS) terminal 1	EC-1426, "Wiring Diagram"
87	APP sensor terminal 5	EC-1608, "Wiring Diagram"
91	EVAP control system pressure sensor terminal 3	EC-1484, "Wiring Diagram"

OK or NG

OK >> GO TO 6.
NG >> Repair short to ground or short to power in harness or connectors.

6. CHECK COMPONENTS

Check the following.
- Crankshaft position sensor (POS) (Refer to EC-1430, "Component Inspection".)
- Refrigerant pressure sensor (Refer to MTC-27.)
- EVAP control system pressure (Refer to EC-1488, "Component Inspection".)

OK or NG

OK >> GO TO 11.
NG >> Replace malfunctioning component.

7. CHECK APP SENSOR GROUND CIRCUIT FOR OPEN AND SHORT

1. Turn ignition switch OFF.
2. Disconnect ECM harness connector.
3. Check harness continuity between the following;
   ECM terminal 84 and APP sensor terminal 2,
   ECM terminal 100 and APP sensor terminal 1.
   Refer to Wiring Diagram.

   Continuity should exist.

4. Also check harness for short to ground and short to power.

OK or NG

OK >> GO TO 8.
NG >> Repair open circuit or short to ground or short to power in harness or connectors.

8. CHECK APP SENSOR INPUT SIGNAL CIRCUIT FOR OPEN AND SHORT

1. Check harness continuity between the following;
   ECM terminal 81 and APP sensor terminal 3,
   ECM terminal 82 and APP sensor terminal 6.
   Refer to Wiring Diagram.

   Continuity should exist.

2. Also check harness for short to ground and short to power.

OK or NG

OK >> GO TO 9.
NG >> Repair open circuit or short to ground or short to power in harness or connectors.

9. CHECK APP SENSOR

Refer to EC-1624, "Component Inspection".

OK or NG

OK >> GO TO 11.
NG >> GO TO 10.

10. REPLACE ACCELERATOR PEDAL ASSEMBLY

1. Replace accelerator pedal assembly.
2. Perform EC-1193, "Accelerator Pedal Released Position Learning".
3. Perform EC-1193, "Throttle Valve Closed Position Learning".
4. Perform EC-1193, "Idle Air Volume Learning".

>> **INSPECTION END**

11. CHECK INTERMITTENT INCIDENT

Refer to EC-1245.

>> **INSPECTION END**

Component Inspection

INFOID:0000000005286219

ACCELERATOR PEDAL POSITION SENSOR

1. Reconnect all harness connectors disconnected.
2. Turn ignition switch ON.
3. Check voltage between ECM terminals 81 (APP sensor 1 signal), 82 (APP sensor 2 signal) and ground under the following conditions.

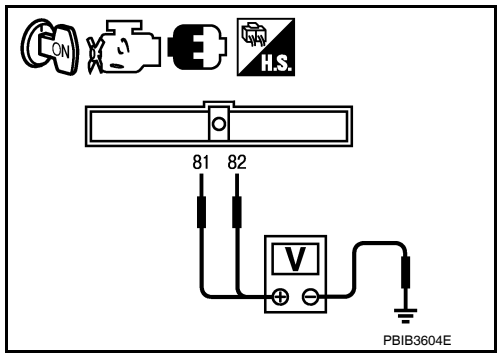

Terminal	Accelerator pedal	Voltage
81 (Accelerator pedal position sensor 1)	Fully released	0.6 - 0.9 V
	Fully depressed	3.9 - 4.7 V
82 (Accelerator pedal position sensor 2)	Fully released	0.3 - 0.6 V
	Fully depressed	1.95 - 2.4 V

4. If NG, replace accelerator pedal assembly and go to next step.
5. Perform EC-1193, "Accelerator Pedal Released Position Learning".
6. Perform EC-1193, "Throttle Valve Closed Position Learning".
7. Perform EC-1193, "Idle Air Volume Learning".

Removal and Installation

INFOID:0000000005286220

ACCELERATOR PEDAL

Refer to ACC-4.

DTC P2A00, P2A03 A/F SENSOR 1

Component Description

INFOID:0000000005286221

The air fuel ratio (A/F) sensor 1 is a planar one-cell limit current sensor. The sensor element of the A/F sensor 1 is composed an electrode layer, which transports ions. It has a heater in the element.
The sensor is capable of precise measurement λ = 1, but also in the lean and rich range. Together with its control electronics, the sensor outputs a clear, continuous signal throughout a wide λ range.
The exhaust gas components diffuse through the diffusion layer at the sensor cell. An electrode layer is applied voltage, and this current relative oxygen density in lean. Also this current relative hydrocarbon density in rich.
Therefore, the A/F sensor 1 is able to indicate air fuel ratio by this electrode layer of current. In addition, a heater is integrated in the sensor to ensure the required operating temperature of approximately 800°C (1,472°F).

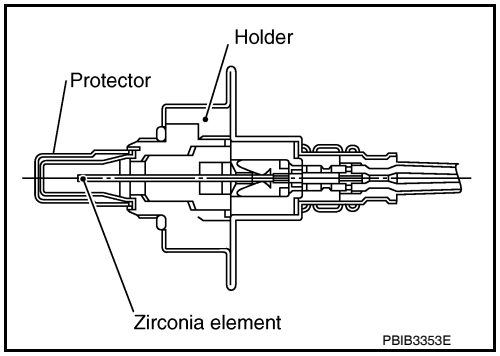

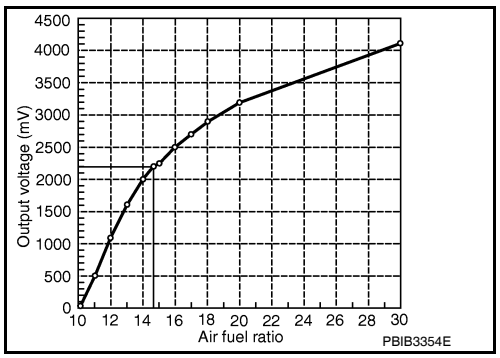

CONSULT-III Reference Value in Data Monitor Mode

INFOID:0000000005286222

Specification data are reference values.

Monitor item	Condition		Specification
A/F SEN1 (B1) A/F SEN1 (B2)	• Engine: After warming up	Maintaining engine speed at 2,000 rpm	Fluctuates around 2.2 V

On Board Diagnosis Logic

INFOID:0000000005286223

To judge the malfunction, the A/F signal computed by ECM from the A/F sensor 1 signal is monitored not to be shifted to LEAN side or RICH side.

DTC No.	Trouble diagnosis name	DTC detecting condition	Possible Cause
P2A00 2A00 (Bank 1) P2A03 2A03 (Bank 2)	Air fuel ratio (A/F) sensor 1 circuit range/performance	• The output voltage computed by ECM from the A/F sensor 1 signal is shifted to the lean side for a specified period. • The A/F signal computed by ECM from the A/F sensor 1 signal is shifted to the rich side for a specified period.	• Air fuel ratio (A/F) sensor 1 • Air fuel ratio (A/F) sensor 1 heater • Fuel pressure • Fuel injector • Intake air leaks

DTC Confirmation Procedure

INFOID:0000000005286224

NOTE:
If DTC Confirmation Procedure has been previously conducted, always turn ignition switch OFF and wait at least 10 seconds before conducting the next test.
TESTING CONDITION:
Before performing the following procedure, confirm that battery voltage is more than 11 V at idle.

WITH CONSULT-III
1. Start engine and warm it up to normal operating temperature.
2. Turn ignition switch OFF and wait at least 10 seconds.

3. Turn ignition switch ON and select “SELF-LEARNING CONT” in “WORK SUPPORT” mode with CONSULT-III.
4. Clear the self-learning coefficient by touching “CLEAR”.
5. Turn ignition switch OFF and wait at least 10 seconds.
6. Start engine and keep the engine speed between 3,500 and 4,000 rpm for 1 minute under no load.
7. Let engine idle for 1 minute.
8. Keep engine speed between 2,500 and 3,000 rpm for 20 minutes.
9. Check 1st trip DTC.
10. If 1st trip DTC is detected, go to EC-1630, "Diagnosis Procedure".

WITH GST

1. Start engine and warm it up to normal operating temperature.
2. Turn ignition switch OFF and wait at least 10 seconds.
3. Disconnect mass air flow sensor (1) harness connector.

- ⇦: Vehicle front

4. Start engine and let it idle for at least 5 seconds.
5. Stop engine and reconnect mass air flow sensor harness connector.
6. Select Service $03 with GST and check that DTC P0102 is detected.
7. Select Service $04 with GST and erase the DTC P0102.
8. Start engine and keep the engine speed between 3,500 and 4,000 rpm for 1 minute under no load.
9. Let engine idle for 1 minute.
10. Keep engine speed between 2,500 and 3,000 rpm for 20 minutes.
11. Select Service $07 with GST.
    If 1st trip DTC is detected, go to EC-1630, "Diagnosis Procedure".

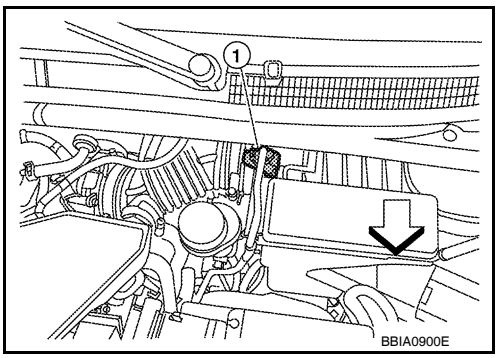

Wiring Diagram

INFOID:0000000005286225

BANK 1

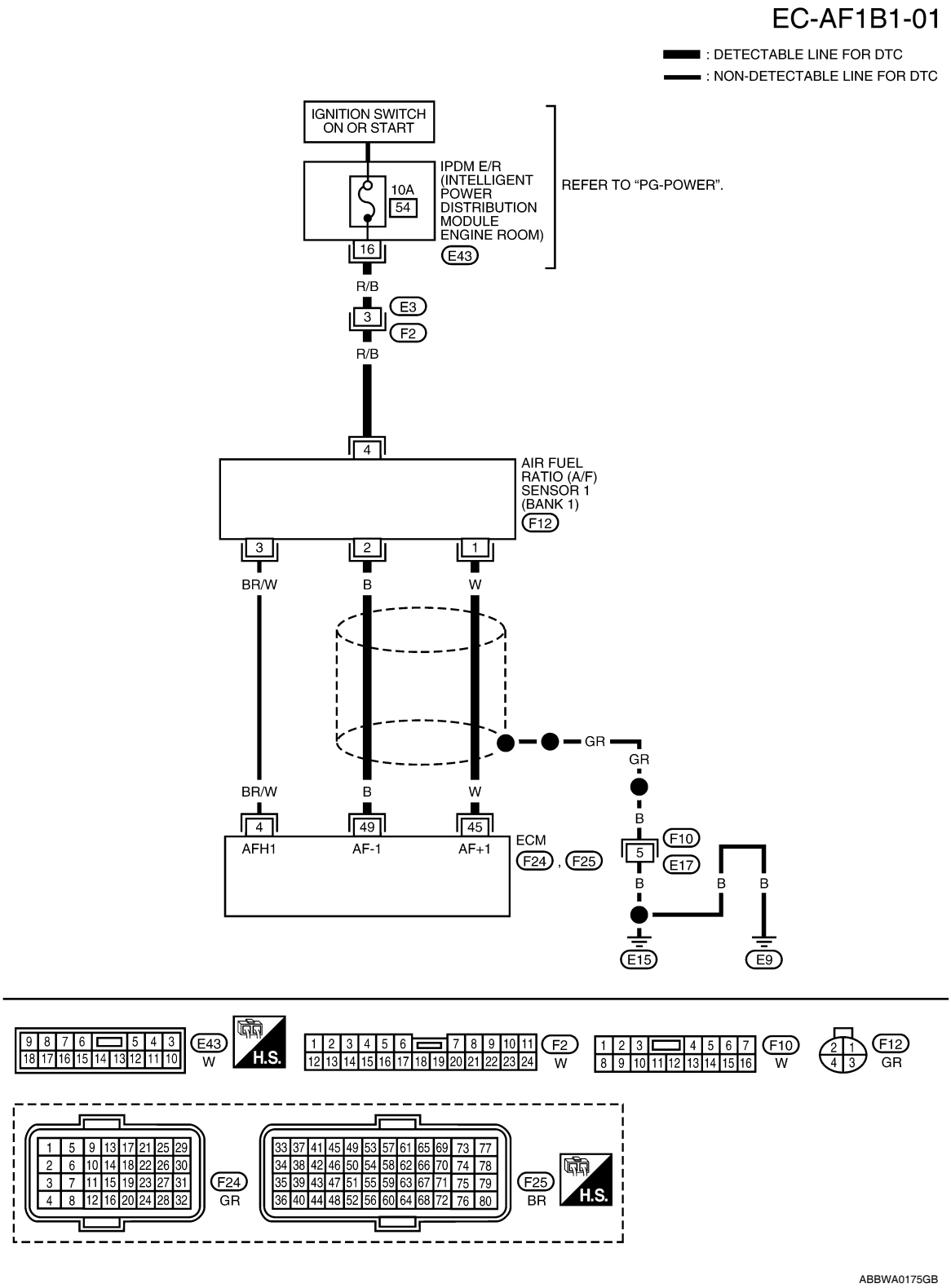

Specification data are reference values and are measured between each terminal and ground.
Pulse signal is measured by CONSULT-III.

CAUTION:

Never use ECM ground terminals when measuring input/output voltage. Doing so may result in damage to the ECM's transistor. Use a ground other than ECM terminals, such as the ground.

TERMINAL NO.	WIRE COLOR	ITEM	CONDITION	DATA (DC Voltage)
4	BR/W	A/F sensor 1 heater (Bank 1)	**[Engine is running]** • **Warm-up condition** • Idle speed (More than 140 seconds after starting engine)	Approximately 2.9 - 8.8 V★ 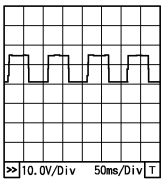 PBIA8148J
45	W	A/F sensor 1 (Bank 1)	**[Engine is running]** • **Warm-up condition** • Engine speed: 2,000 rpm	Approximately 1.8 V Output voltage varies with air fuel ratio.
49	B	A/F sensor 1 (Bank 1)	**[Ignition switch: ON]**	Approximately 2.2 V

★: Average voltage for pulse signal (Actual pulse signal can be confirmed by oscilloscope.)

EC-AF1B2-01

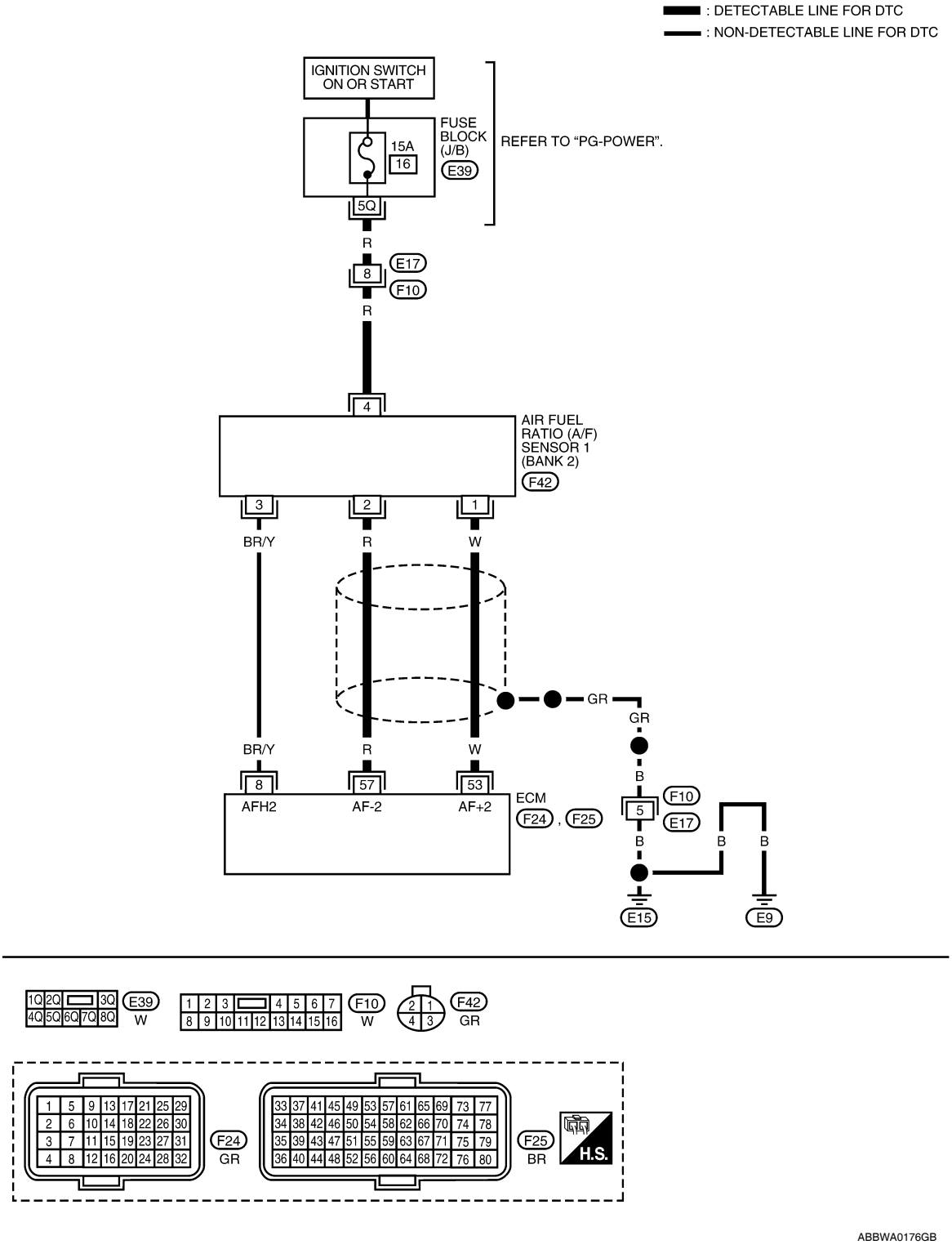

Specification data are reference values and are measured between each terminal and ground.
Pulse signal is measured by CONSULT-III.

CAUTION:

Never use ECM ground terminals when measuring input/output voltage. Doing so may result in damage to the ECM's transistor. Use a ground other than ECM terminals, such as the ground.

TERMINAL NO.	WIRE COLOR	ITEM	CONDITION	DATA (DC Voltage)
8	BR/Y	A/F sensor 1 heater (Bank 2)	**[Engine is running]** • **Warm-up condition** • Idle speed (More than 140 seconds after starting engine)	Approximately 2.9 - 8.8 V★ 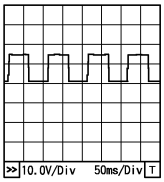 PBIA8148J
53	W	A/F sensor 1 (Bank 2)	**[Engine is running]** • **Warm-up condition** • Engine speed: 2,000 rpm	Approximately 1.8 V Output voltage varies with air fuel ratio.
57	R	A/F sensor 1 (Bank 2)	**[Ignition switch: ON]**	Approximately 2.2 V

★: Average voltage for pulse signal (Actual pulse signal can be confirmed by oscilloscope.)

Diagnosis Procedure

INFOID:0000000005286226

1. CHECK GROUND CONNECTIONS

1. Turn ignition switch OFF.
2. Loosen and retighten ground screws on the body.
   Refer to EC-1251, "Ground Inspection".

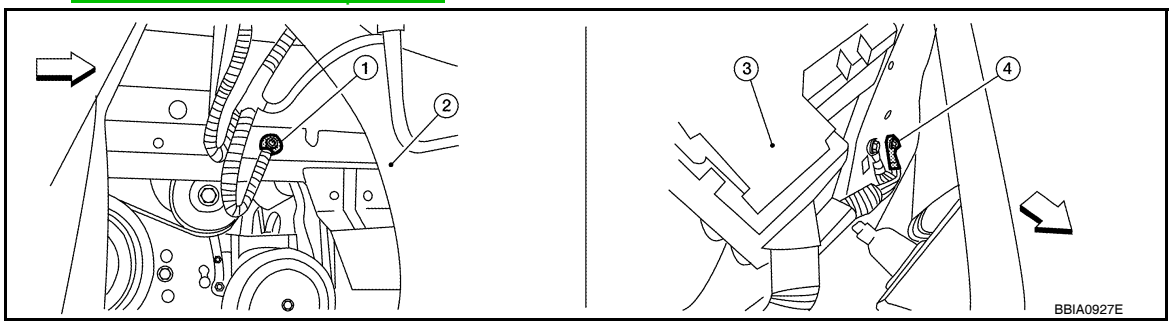

⇦: Vehicle front

1. Body ground E9 (view with front wheel RH and fender protector RH removed.)
2. Washer tank
3. Fuse and fusible link box
4. Body ground E15

OK or NG

OK >> GO TO 2.
NG >> Repair or replace ground connections.

2. RETIGHTEN AIR FUEL RATIO (A/F) SENSOR 1

Loosen and retighten the air fuel ratio (A/F) sensor 1 (2). Refer to EM-140, "Removal and Installation".

- Air fuel ratio (A/F) sensor 1 (Bank 1) harness connector (1)
- Air fuel ratio (A/F) sensor 1 (Bank 1) (2)
- Air fuel ratio (A/F) sensor 1 (Bank 2) (3)
- Air fuel ratio (A/F) sensor 1 (Bank 2) harness connector (4)

>> GO TO 3.

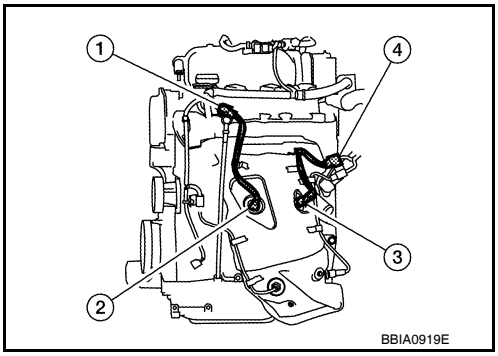

3. CHECK FOR INTAKE AIR LEAK

1. Start engine and run it at idle.
2. Listen for an intake air leak after the mass air flow sensor.

OK or NG

OK >> GO TO 4.
NG >> Repair or replace.

4. CLEAR THE SELF-LEARNING DATA.

With CONSULT-III

1. Start engine and warm it up to normal operating temperature.
2. Select “SELF-LEARNING CONT” in “WORK SUPPORT” mode with CONSULT-III.
3. Clear the self-learning control coefficient by touching “CLEAR”.
4. Run engine for at least 10 minutes at idle speed.
5. Check 1st trip DTC.
   Is the 1st trip DTC P0171, P0172, P0174 or P0175 detected? Is it difficult to start engine?
   Is it difficult to start engine?

Without CONSULT-III

1. Start engine and warm it up to normal operating temperature.
2. Turn ignition switch OFF.
3. Disconnect mass air flow sensor (1) harness connector.
- ⇦: Vehicle front
4. Restart engine and let it idle for at least 5 seconds.
5. Stop engine and reconnect mass air flow sensor harness connector.
6. Check that DTC P0102 is displayed.
7. Erase the DTC memory. Refer to EC-1155, "Emission-related Diagnostic Information".
8. Check that DTC P0000 is displayed.
9. Run engine for at least 10 minutes at idle speed.
   Is the 1st trip DTC P0171, P0172, P0174 or P0175 detected?
   Is it difficult to start engine?
   Is it difficult to start engine?

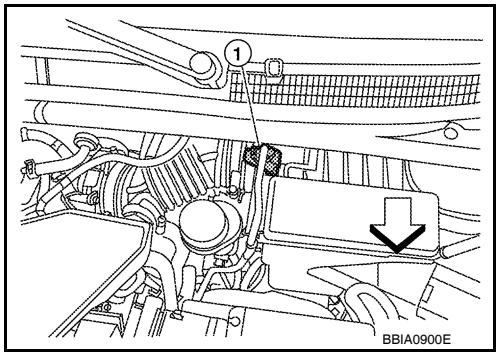

Yes or No

Yes >> Perform trouble diagnosis for DTC P0171, P0174 or P0172, P0175. Refer to EC-275 or EC-281.
No >> GO TO 5.

5. CHECK HARNESS CONNECTOR

1. Turn ignition switch OFF.
2. Disconnect air fuel ratio (A/F) sensor 1 harness connector.
- Air fuel ratio (A/F) sensor 1 (Bank 1) harness connector (1)
- Air fuel ratio (A/F) sensor 1 (Bank 1) (2)
- Air fuel ratio (A/F) sensor 1 (Bank 2) (3)
- Air fuel ratio (A/F) sensor 1 (Bank 2) harness connector (4)
3. Check harness connector for water.

Water should no exist.

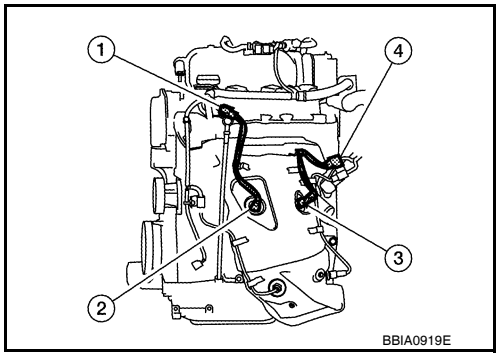

OK or NG

OK >> GO TO 6.
NG >> Repair or replace harness connector.

6. CHECK AIR FUEL RATIO (A/F) SENSOR 1 POWER SUPPLY CIRCUIT

1. Turn ignition switch ON.

2. Check voltage between A/F sensor 1 terminal 4 and ground with CONSULT-III or tester.

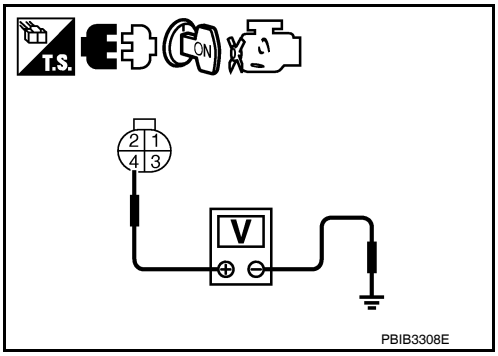

Voltage: Battery voltage

OK or NG

OK >> GO TO 8.
NG >> GO TO 7.

7. DETECT MALFUNCTIONING PART

Check the following.
- Harness connectors E3, F2 (Bank 1)
- Harness connectors E17, F10 (Bank 2)
- Fuse block (J/B) connector E43 (Bank 1)
- Fuse block (J/B) connector E39 (Bank 2)
- 10 A fuse (Bank 1)
- 15 A fuse (Bank 2)
- Harness for open or short between A/F sensor 1 and fuse

>> Repair or replace harness or connectors.

8. CHECK A/F SENSOR 1 INPUT SIGNAL CIRCUIT FOR OPEN AND SHORT

1. Turn ignition switch OFF.
2. Disconnect ECM harness connector.
3. Check harness continuity between the following terminals. Refer to Wiring Diagram.

Bank	A/F sensor 1 terminal	ECM terminal
1	1	45
	2	49
2	1	53
	2	57

Continuity should exist.

4. Check harness continuity between the following terminals and ground. Refer to Wiring Diagram.

Bank 1		Bank 2	
A/F sensor terminal	ECM terminal	A/F sensor terminal	ECM terminal
1	45	1	53
2	49	2	57

Continuity should not exist.

5. Also check harness for short to power.

OK or NG

OK >> GO TO 9.
NG >> Repair open circuit or short to ground or short to power in harness or connectors.

9. CHECK A/F SENSOR 1 HEATER

Refer to EC-1267, "Component Inspection".

OK or NG

OK >> GO TO 10.

NG >> GO TO 11.

10. CHECK INTERMITTENT INCIDENT

Perform EC-1245.

OK or NG

OK >> GO TO 11.
NG >> Repair or replace.

11. REPLACE AIR FUEL RATIO (A/F) SENSOR 1

Replace malfunctioning air fuel ratio (A/F) sensor 1.

CAUTION:

- **Discard any air fuel ratio (A/F) sensor which has been dropped from a height of more than 0.5 m (19.7 in) onto a hard surface such as a concrete floor; use a new one.**
- **Before installing new air fuel ratio (A/F) sensor, clean exhaust system threads using heated oxygen sensor thread cleaner [commercial service tool (J-43897-18 or J-43897-12)] and approved anti-seize lubricant (commercial service tool).**

>> GO TO 12.

12. CONFIRM A/F ADJUSTMENT DATA

1. Turn ignition switch ON.
2. Select “A/F ADJ-B1” and “A/F ADJ-B2” in “DATA MONITOR” mode with CONSULT-III.
3. Check that “0.000” is displayed on CONSULT-III screen.

OK or NG

OK >> **INSPECTION END**
NG >> GO TO 13.

13. CLEAR THE SELF-LEARNING DATA

With CONSULT-III

1. Start engine and warm it up to normal operating temperature.
2. Select “SELF-LEARNING CONT” in “WORK SUPPORT” mode with CONSULT-III.
3. Clear the self-learning control coefficient by touching “CLEAR”.

Without CONSULT-III

1. Start engine and warm it up to normal operating temperature.
2. Turn ignition switch OFF.
3. Disconnect mass air flow sensor harness (1) connector.

- ⇦: Vehicle front

4. Restart engine and let it idle for at least 5 seconds.
5. Stop engine and reconnect mass air flow sensor harness connector.
6. Check that DTC P0102 is displayed.
7. Erase the DTC memory. Refer to EC-1155, "Emission-related Diagnostic Information".
8. Check that DTC P0000 is displayed.

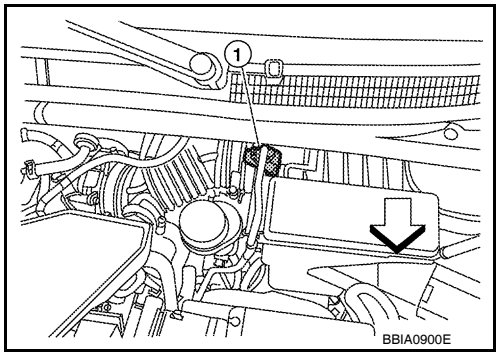

>> GO TO 14.

14. CONFIRM A/F ADJUSTMENT DATA

1. Turn ignition switch OFF and then ON.
2. Select “A/F ADJ-B1” and “A/F ADJ-B2” in “DATA MONITOR” mode with CONSULT-III.
3. Check that “0.000” is displayed on CONSULT-III screen.

>> **INSPECTION END**

Removal and Installation

INFOID:0000000005286227

AIR FUEL RATIO SENSOR

Refer to EM-140.

ASCD BRAKE SWITCH

Component Description

INFOID:0000000005286228

When depress on the brake pedal, ASCD brake switch (1) is turned OFF and stop lamp switch (2) is turned ON. ECM detects the state of the brake pedal (3) by this input of two kinds (ON/OFF signal)
Refer to EC-1135 for the ASCD function.

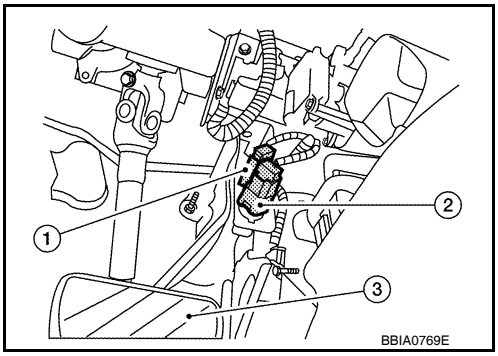

CONSULT-III Reference Value in Data Monitor Mode

INFOID:0000000005286229

Specification data are reference values.

MONITOR ITEM	CONDITION		SPECIFICATION
BRAKE SW1 (ASCD brake switch)	• Ignition switch: ON	• Brake pedal: Fully released (CVT) • Brake pedal and clutch pedal: Fully released (M/T)	ON
		• Brake pedal: Slightly depressed (CVT) • Brake pedal and/or clutch pedal: Slightly depressed (M/T)	OFF
BRAKE SW2 (Stop lamp switch)	• Ignition switch: ON	Brake pedal: Fully released	OFF
		Brake pedal: Slightly depressed	ON

Wiring Diagram

INFOID:0000000005286230

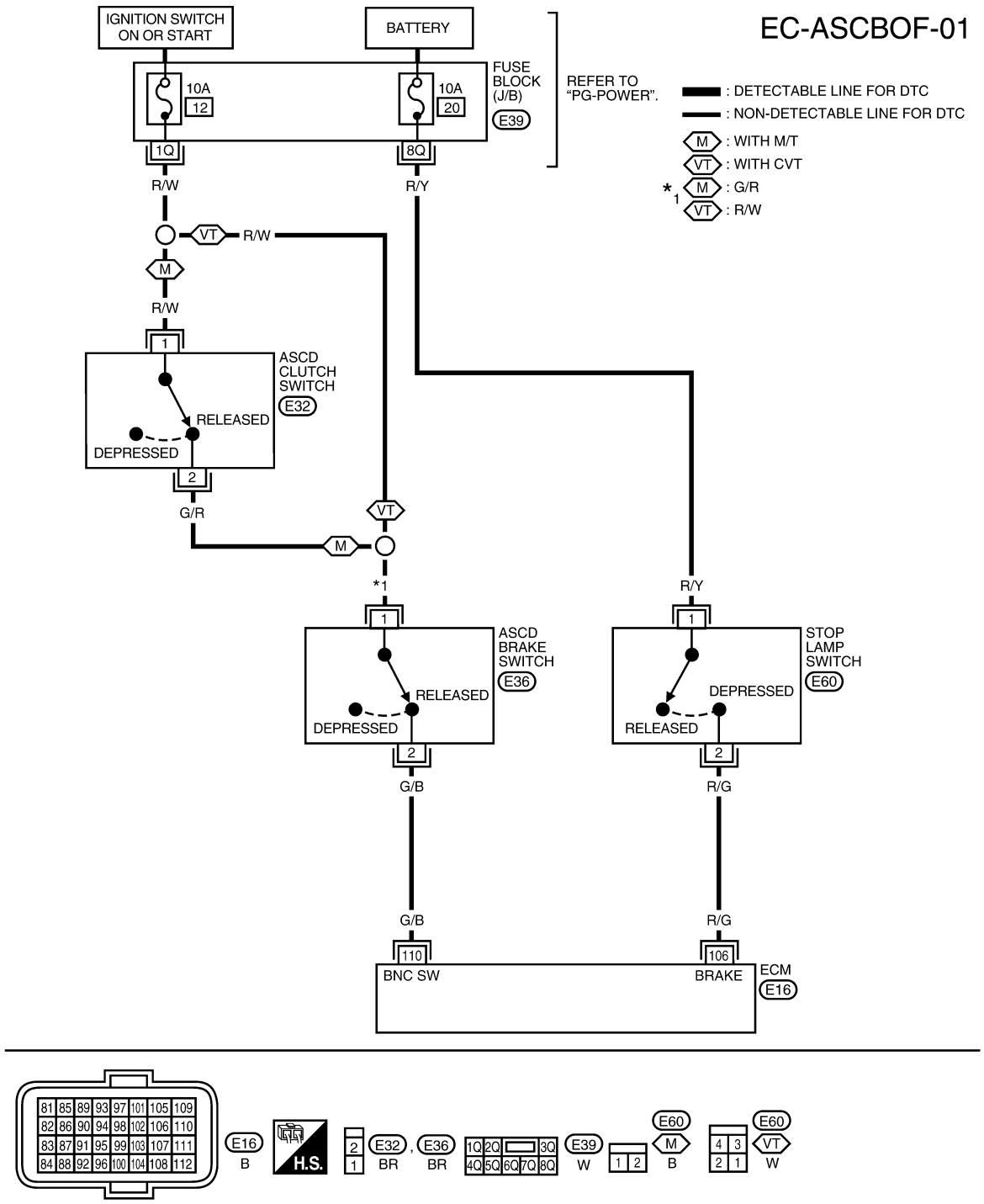

Specification data are reference values and are measured between each terminal and ground.

CAUTION:

Never use ECM ground terminals when measuring input/output voltage. Doing so may result in damage to the ECM's transistor. Use a ground other than ECM terminals, such as the ground.

TERMINAL NO.	WIRE COLOR	ITEM	CONDITION	DATA (DC Voltage)
106	R/G	Stop lamp switch	**[Ignition switch: ON]** • Brake pedal: Fully released	Approximately 0 V
			[Ignition switch: ON] • Brake pedal: Slightly depressed	BATTERY VOLTAGE (11 - 14 V)
110	G/B	ASCD brake switch	**[Ignition switch: ON]** • Brake pedal: Slightly depressed (CVT) • Brake pedal and/or clutch pedal: Slightly depressed (M/T)	Approximately 0 V
			[Ignition switch: ON] • Brake pedal: Fully released (CVT) • Brake pedal and clutch pedal: Fully released (M/T)	BATTERY VOLTAGE (11 - 14 V)

Diagnosis Procedure

INFOID:0000000005286231

1. CHECK OVERALL FUNCTION-I

With CONSULT-III

1. Turn ignition switch ON.
2. Select “BRAKE SW1” in “DATA MONITOR” mode with CONSULT-III.
3. Check “BRAKE SW1” indication under the following conditions.

M/T models

CONDITION	INDICATION
Clutch pedal and/or brake pedal: Slightly depressed	OFF
Clutch pedal and brake pedal: Fully released	ON

CVT models

CONDITION	INDICATION
Brake pedal: Slightly depressed	OFF
Brake pedal: Fully released	ON

Without CONSULT-III

1. Turn ignition switch ON.
2. Check voltage between ECM terminal 110 and ground under the following conditions.

M/T models

CONDITION	VOLTAGE
Clutch pedal and/or brake pedal: Slightly depressed	Approximately 0 V
Clutch pedal and brake pedal: Fully released	Battery voltage

CVT models

CONDITION	VOLTAGE
Brake pedal: Slightly depressed	Approximately 0 V
Brake pedal: Fully released	Battery voltage

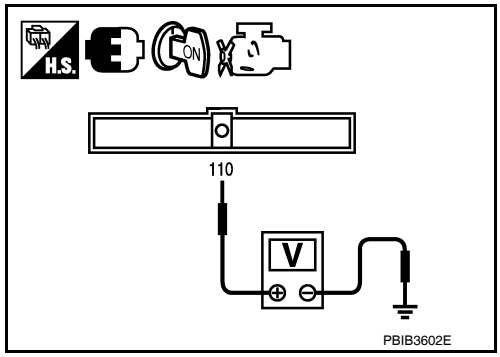

OK or NG

OK >> GO TO 2.
NG >> GO TO 3.

2. CHECK OVERALL FUNCTION-II

With CONSULT-III

Check “BRAKE SW2” indication in “DATA MONITOR” mode.

CONDITION	INDICATION
Brake pedal: Fully released	OFF
Brake pedal: Slightly depressed	ON

Without CONSULT-III

Check voltage between ECM terminal 106 and ground under the following conditions.

CONDITION	VOLTAGE
Brake pedal: Fully released	Approximately 0 V
Brake pedal: Slightly depressed	Battery voltage

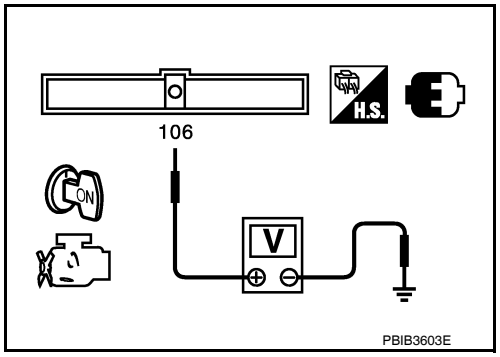

OK or NG

OK >> **INSPECTION END**
NG >> GO TO 11.

3. CHECK ASCD BRAKE SWITCH POWER SUPPLY

1. Turn ignition switch OFF.
2. Disconnect ASCD brake switch (1) harness connector.
- Stop lamp switch (2)
- Brake pedal (3)
3. Turn ignition switch ON.

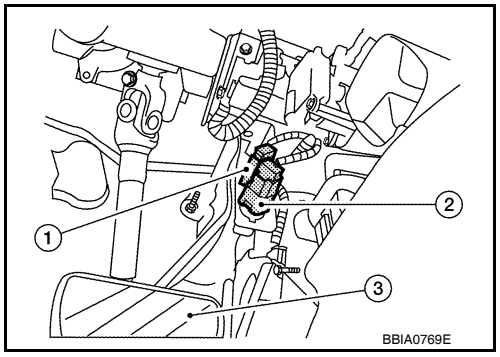

4. Check voltage between ASCD brake switch terminal 1 and ground with CONSULT-III or tester.

Voltage : Battery voltage

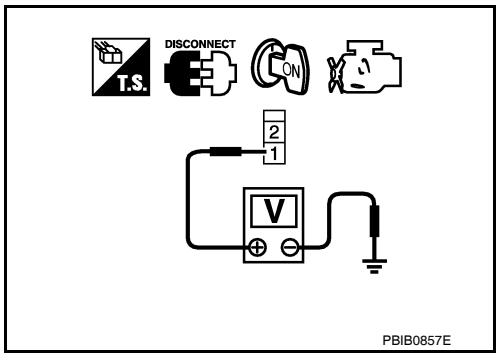

OK or NG

OK >> GO TO 8.
NG (M/T models) >>GO TO 4.
NG (CVT models)>>GO TO 6.

4. CHECK ASCD CLUTCH SWITCH POWER SUPPLY CIRCUIT

1. Turn ignition switch OFF.

2. Disconnect ASCD clutch switch (1) harness connector.
- Clutch pedal (2)
3. Turn ignition switch ON.

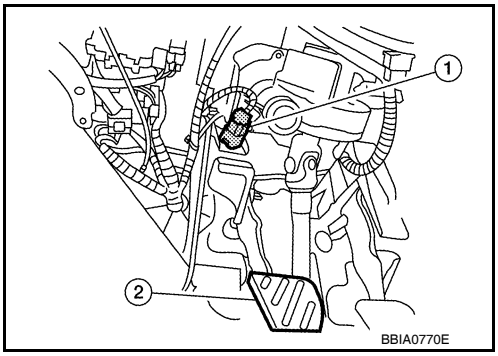

4. Check voltage between ASCD clutch switch terminal 1 and ground with CONSULT-III or tester.

Voltage: Battery voltage

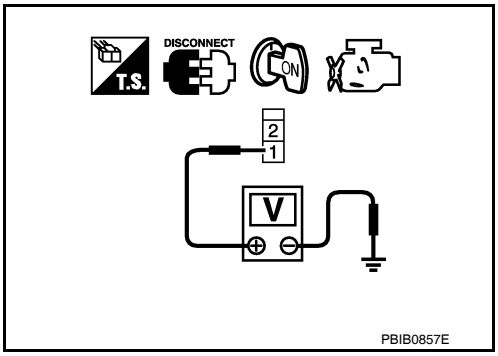

OK or NG

OK >> GO TO 7.
NG >> GO TO 5.

5. DETECT MALFUNCTIONING PART

Check the following.
- 10A fuse
- Harness for open or short between ASCD clutch switch and fuse

>> Repair open circuit or short to ground or short to power in harness or connectors.

6. DETECT MALFUNCTIONING PART

Check the following.
- 10A fuse
- Harness for open or short between ASCD brake switch and fuse

>> Repair open circuit or short to ground or short to power in harness or connectors.

7. CHECK ASCD CLUTCH SWITCH INPUT SIGNAL CIRCUIT FOR OPEN AND SHORT

1. Turn ignition switch OFF.
2. Check harness continuity between ASCD brake switch terminal 1 and ASCD clutch switch terminal 2. Refer to Wiring Diagram.

Continuity should exist.

3. Also check harness for short to ground and short to power.

OK or NG

OK >> GO TO 10.
NG >> Repair open circuit or short to ground or short to power in harness or connectors.

8. CHECK ASCD BRAKE SWITCH INPUT SIGNAL CIRCUIT FOR OPEN AND SHORT

1. Turn ignition switch OFF.
2. Disconnect ECM harness connector.
3. Check harness continuity between ECM terminal 110 and ASCD brake switch terminal 2. Refer to Wiring Diagram.

Continuity should exist.

4. Also check harness for short to ground and short to power.

OK or NG

OK >> GO TO 9.
NG >> Repair open circuit or short to ground or short to power in harness or connectors.

9. CHECK ASCD BRAKE SWITCH

Refer to EC-1574, "Component Inspection".

OK or NG

OK >> GO TO 15.
NG >> Replace ASCD brake switch.

10. CHECK ASCD CLUTCH SWITCH

Refer to EC-1574, "Component Inspection"

OK or NG

OK >> GO TO 15.
NG >> Replace ASCD clutch switch.

11. CHECK STOP LAMP SWITCH POWER SUPPLY CIRCUIT

1. Turn ignition switch OFF.
2. Disconnect stop lamp switch (2) harness connector.
- ASCD brake switch (1)
- Brake pedal (3)

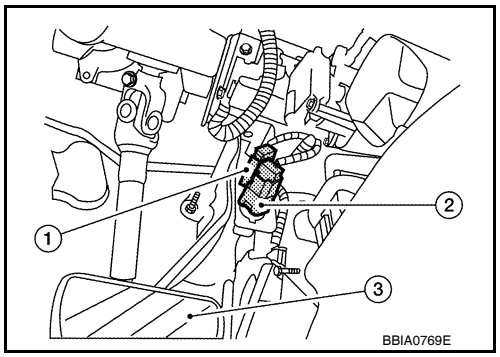

3. Check voltage between stop lamp switch terminal 1 and ground with CONSULT -III or tester.

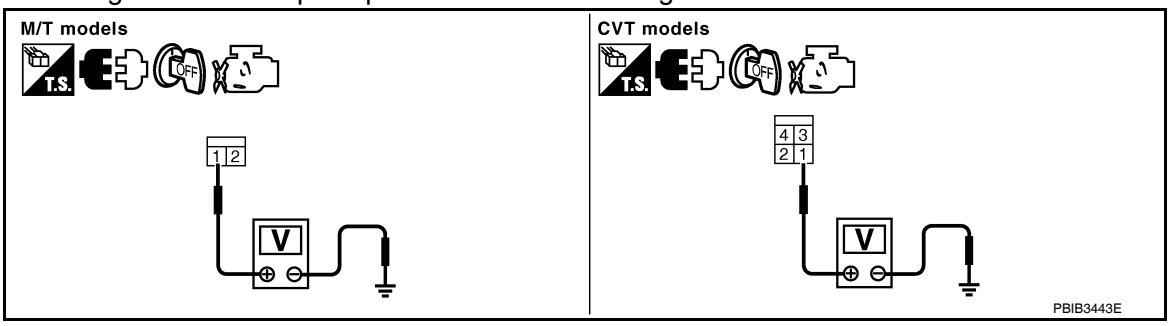

Voltage: Battery voltage

OK or NG

OK >> GO TO 13.
NG >> GO TO 12.

12. DETECT MALFUNCTIONING PART

Check the following.
- 10A fuse
- Harness for open or short between stop lamp switch and battery

>> Repair open circuit or short to ground or short to power in harness or connectors.

13. CHECK STOP LAMP SWITCH INPUT SIGNAL CIRCUIT FOR OPEN AND SHORT

1. Disconnect ECM harness connector.
2. Check harness continuity between ECM terminal 106 and stop lamp switch terminal 2.
   Refer to Wiring Diagram.

Continuity should exist.

3. Also check harness for short to ground and short to power.

OK or NG

OK >> GO TO 14.
NG >> Repair open circuit or short to ground or short to power in harness or connectors.

14. CHECK STOP LAMP SWITCH

Refer to EC-1574, "Component Inspection"

OK or NG

OK >> GO TO 15.
NG >> Replace stop lamp switch.

15. CHECK INTERMITTENT INCIDENT

Refer to EC-1245.

>> **INSPECTION END**

Component Inspection

INFOID:0000000005286232

ASCD BRAKE SWITCH

1. Turn ignition switch OFF.
2. Disconnect ASCD brake switch harness connector.
3. Check continuity between ASCD brake switch terminals 1 and 2 under the following conditions.

Condition	Continuity
Brake pedal: Fully released.	Should exist.
Brake pedal: Slightly depressed.	Should not exist.

If NG, adjust ASCD brake switch installation, refer to BR-8, and perform step 3 again.

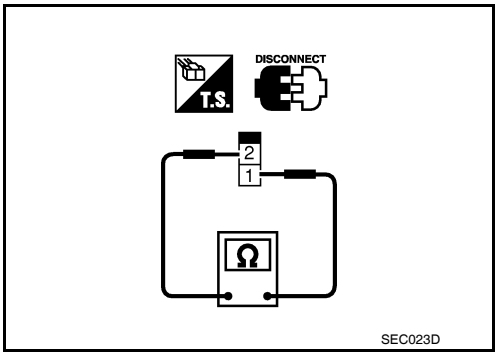

ASCD CLUTCH SWITCH

1. Turn ignition switch OFF.
2. Disconnect ASCD clutch switch harness connector.
3. Check continuity between ASCD clutch switch terminals 1 and 2 under the following conditions.

Condition	Continuity
Clutch pedal: Fully released.	Should exist.
Clutch pedal: Slightly depressed.	Should not exist.

If NG, adjust ASCD clutch switch installation, refer to CL-6, and perform step 3 again.

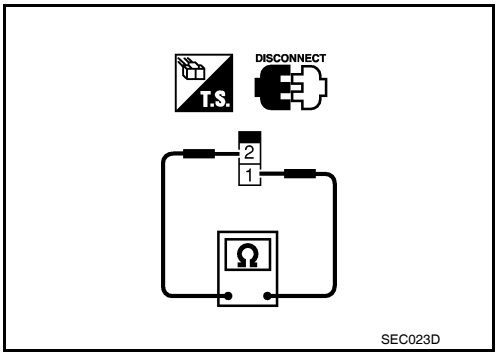

STOP LAMP SWITCH

1. Turn ignition switch OFF.
2. Disconnect stop lamp switch harness connector.

3. Check continuity between stop lamp switch terminals 1 and 2 under the following conditions.

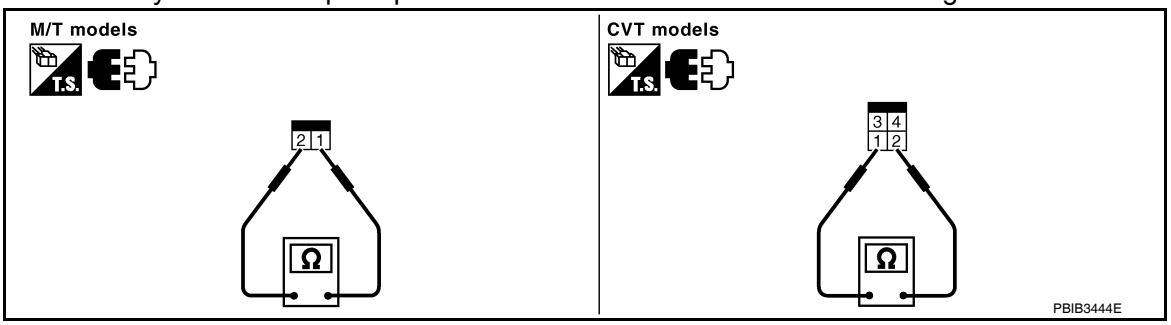

Condition	Continuity
Brake pedal: Fully released.	Should not exist.
Brake pedal: Slightly depressed.	Should exist.

If NG, adjust stop lamp switch installation, refer to BR-8, and perform step 3 again.

ASCD INDICATOR

Component Description

INFOID:0000000005286233

ASCD indicator lamp illuminates to indicate ASCD operation status. Lamp has two indicators, CRUISE and SET, and is integrated in combination meter.
CRUISE indicator illuminates when MAIN switch on ASCD steering switch is turned ON to indicate that ASCD system is ready for operation.
SET indicator illuminates when following conditions are met.
- CRUISE indicator is illuminated.
- SET/COAST switch on ASCD steering switch is turned ON while vehicle speed is within the range of ASCD setting.

SET indicator remains lit during ASCD control.
Refer to EC-1135 for the ASCD function.

CONSULT-III Reference Value in Data Monitor Mode

INFOID:0000000005286234

Specification data are reference value.

Monitor item	Condition		Specification
CRUISE LAMP	• Ignition switch: ON	MAIN switch: Pressed at 1st time → 2nd	ON → OFF
SET LAMP	• MAIN switch: ON • Vehicle: Between 40 km/h (25 MPH) and 144 km/h (89 MPH)	ASCD: Operating	ON
		ASCD: Not operating	OFF

Wiring Diagram

INFOID:0000000005286235

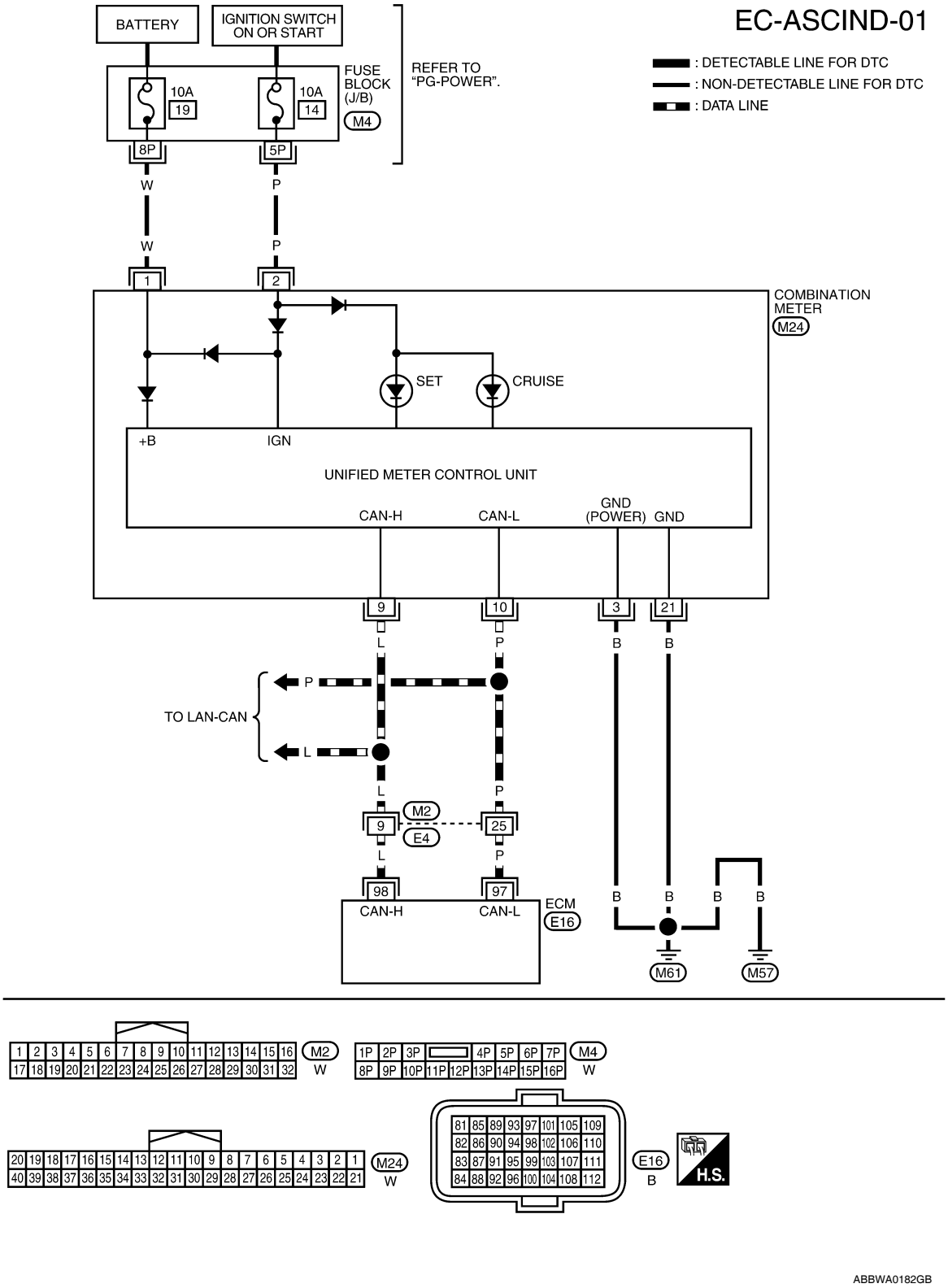

Diagnosis Procedure

INFOID:0000000005286236

1. CHECK OVERALL FUNCTION

Check ASCD indicator under the following conditions.

ASCD indicator	Condition		Specification
CRUISE LAMP	• Ignition switch: ON	MAIN switch: Pressed at 1st time → 2nd	ON → OFF
SET LAMP	• MAIN switch: ON • Vehicle: Between 40 km/h (25 MPH) and 144 km/h (89 MPH)	ASCD: Operating	ON
		ASCD: Not operating	OFF

OK or NG

OK >> **INSPECTION END**
NG >> GO TO 2.

2. CHECK DTC

Check that DTC UXXXX is not displayed.

Yes or No

Yes >> Perform trouble diagnoses for DTC UXXXX.
No >> GO TO 3.

3. CHECK COMBINATION METER OPERATION

Does combination meter operate normally?

Yes or No

Yes >> GO TO 4.
No >> Check combination meter circuit. Refer to DI-6.

4. CHECK INTERMITTENT INCIDENT

Refer to EC-1245.

>> **INSPECTION END**

ELECTRICAL LOAD SIGNAL

CONSULT-III Reference Value in Data Monitor Mode

INFOID:0000000005286237

Specification data are reference values.

Monitor item	Condition		Specification
LOAD SIGNAL	• Ignition switch: ON	Rear window defogger switch is ON and/or lighting switch is in 2nd position.	ON
		Rear window defogger switch is OFF and lighting switch is OFF.	OFF
HEATER FAN SW	• Ignition switch: ON	Heater fan: Operating.	ON
		Heater fan: Not operating.	OFF

Diagnosis Procedure

INFOID:0000000005286238

1. CHECK LOAD SIGNAL CIRCUIT OVERALL FUNCTION-I

1. Turn ignition switch ON.
2. Check “LOAD SIGNAL” in “DATA MONITOR” mode with CONSULT-III under the following conditions.

Condition	LOAD SIGNAL
Lighting switch: ON at 2nd position	ON
Lighting switch: OFF	OFF

OK or NG

OK >> GO TO 2.
NG >> GO TO 4.

2. CHECK LOAD SIGNAL CIRCUIT OVERALL FUNCTION-II

Check “LOAD SIGNAL” in “DATA MONITOR” mode with CONSULT-III under the following conditions.

Condition	LOAD SIGNAL
Rear window defogger switch: ON	ON
Rear window defogger switch: OFF	OFF

OK or NG

OK >> GO TO 3.
NG >> GO TO 5.

3. CHECK HEATER FAN SIGNAL CIRCUIT OVERALL FUNCTION

Check “HEATER FAN SW” in “DATA MONITOR” mode with CONSULT-III under the following conditions.

Condition	HEATER FAN SW
Heater fan control switch: ON	ON
Heater fan control switch: OFF	OFF

OK or NG

OK >> **INSPECTION END**.
NG >> GO TO 6.

4. CHECK HEADLAMP SYSTEM

Refer to LT-4 or LT-25.

>> **INSPECTION END**

5. CHECK REAR WINDOW DEFOGGER SYSTEM

Refer to GW-54.

>> **INSPECTION END**

6. CHECK HEATER FAN CONTROL SYSTEM

Refer to MTC-27.

>> **INSPECTION END**

FUEL INJECTOR

Component Description

INFOID:0000000005286239

The fuel injector is a small, precise solenoid valve. When the ECM supplies a ground to the fuel injector circuit, the coil in the fuel injector is energized. The energized coil pulls the ball valve back and allows fuel to flow through the fuel injector into the intake manifold. The amount of fuel injected depends upon the injection pulse duration. Pulse duration is the length of time the fuel injector remains open. The ECM controls the injection pulse duration based on engine fuel needs.

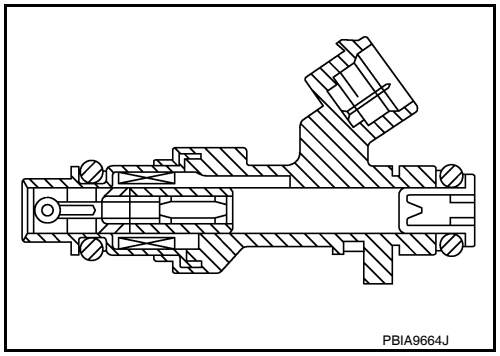

CONSULT-III Reference Value in Data Monitor Mode

INFOID:0000000005286240

Specification data are reference values.

Monitor item	Condition		Specification
B/FUEL SCHDL	See EC-1237.		
INJ PULSE-B1	• Engine: After warming up • Air conditioner switch: OFF • Selector lever: P or N (CVT), Neutral (M/T) • No load	Idle	2.0 - 3.0 msec
INJ PULSE-B2		2,000 rpm	1.9 - 2.9 msec

Wiring Diagram

INFOID:0000000005286241

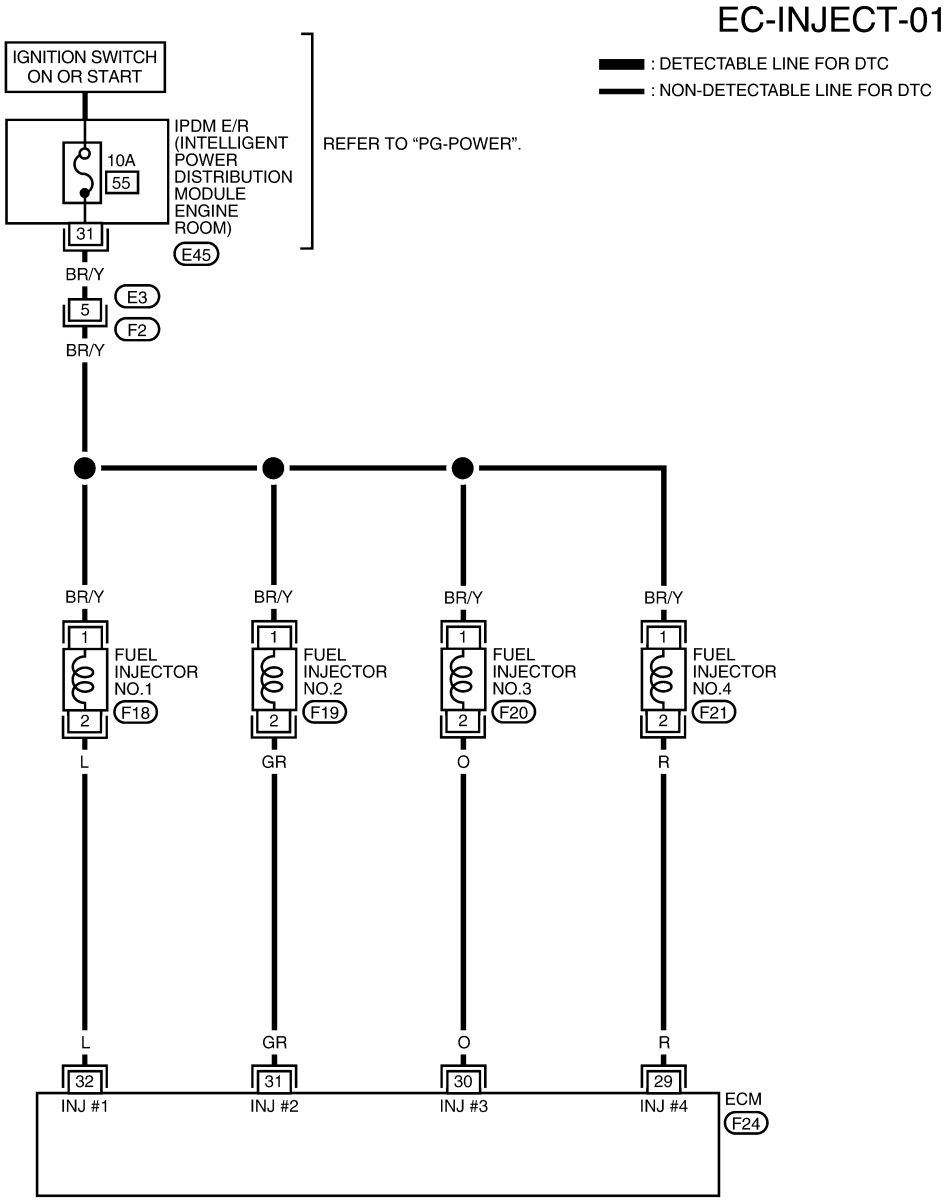

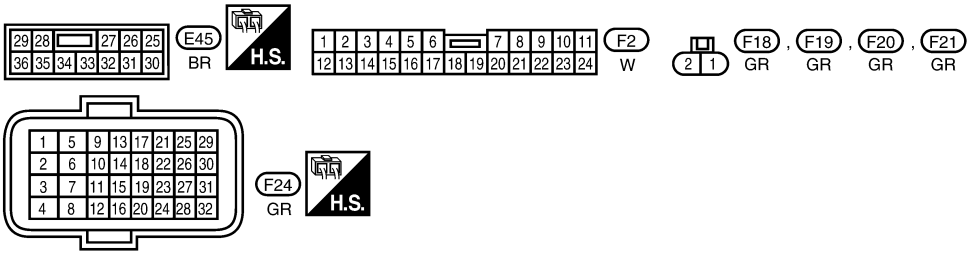

BBWA3062E

Specification data are reference values and are measured between each terminal and ground.
Pulse signal is measured by CONSULT-III.

CAUTION:

Never use ECM ground terminals when measuring input/output voltage. Doing so may result in damage to the ECM's transistor. Use a ground other than ECM terminals, such as the ground.

TERMINAL NO.	WIRE COLOR	ITEM	CONDITION	DATA (DC Voltage)
29 30 31 32	R O GR L	Fuel injector No. 4 Fuel injector No. 3 Fuel injector No. 2 Fuel injector No. 1	**[Engine is running]** • **Warm-up condition** • Idle speed **NOTE:** The pulse cycle changes depending on rpm at idle	BATTERY VOLTAGE (11 - 14 V)★ 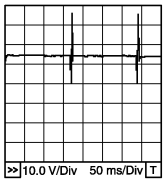 PBIB0529E
			[Engine is running] • **Warm-up condition** • Engine speed: 2,000 rpm	BATTERY VOLTAGE (11 - 14 V)★ 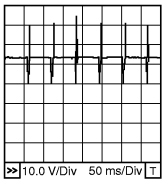 PBIA4943J

★: Average voltage for pulse signal (Actual pulse signal can be confirmed by oscilloscope.)

Diagnosis Procedure

INFOID:0000000005286242

1. INSPECTION START

Turn ignition switch to START.
Is any cylinder ignited?

Yes or No

Yes >> GO TO 2.
No >> GO TO 3.

2. CHECK OVERALL FUNCTION

With CONSULT-III
1. Start engine.
2. Perform “POWER BALANCE” in “ACTIVE TEST” mode with CONSULT-III.
3. Check that each circuit produces a momentary engine speed drop.

Without CONSULT-III
1. Start engine.
2. Listen to each fuel injector operating sound.

Clicking noise should be heard.

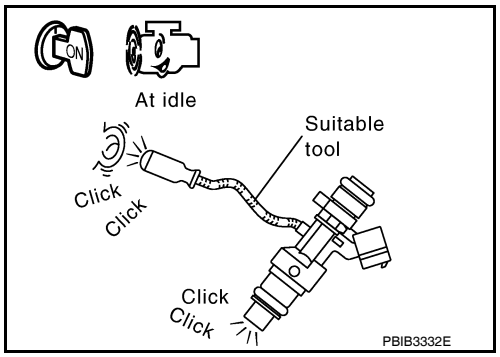

OK or NG

OK >> **INSPECTION END**
NG >> GO TO 3.

3. CHECK FUEL INJECTOR POWER SUPPLY CIRCUIT

1. Turn ignition switch OFF.

2. Disconnect fuel injector harness connector (1).
- ⇦: Vehicle front
3. Turn ignition switch ON.

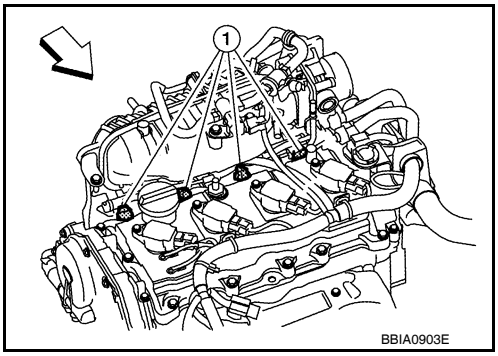

4. Check voltage between fuel injector terminal 1 and ground with CONSULT-III or tester.

Voltage: Battery voltage

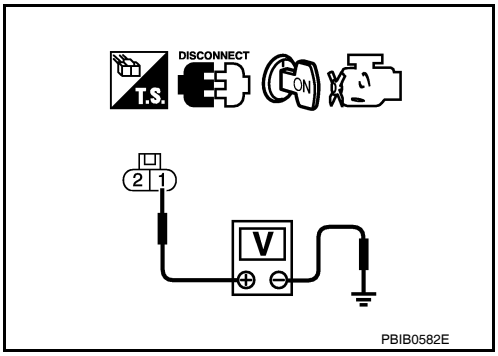

OK or NG

OK >> GO TO 5.
NG >> GO TO 4.

4. DETECT MALFUNCTIONING PART

Check the following.
- Harness connectors E3, F2
- 10 A fuse
- Harness for open or short between fuel injector and fuse

>> Repair open circuit or short to ground or short to power in harness or connectors.

5. CHECK FUEL INJECTOR OUTPUT SIGNAL CIRCUIT FOR OPEN AND SHORT

1. Turn ignition switch OFF.
2. Disconnect ECM harness connector.
3. Check harness continuity between fuel injector terminal 2 and ECM terminals 29, 30, 31, 32. Refer to Wiring Diagram.

Continuity should exist.

4. Also check harness for short to ground and short to power.

OK or NG

OK >> GO TO 6.
NG >> Repair open circuit or short to ground or short to power in harness or connectors.

6. CHECK FUEL INJECTOR

Refer to EC-1651, "Component Inspection".

OK or NG

OK >> GO TO 7.
NG >> Replace malfunctioning fuel injector.

7. CHECK INTERMITTENT INCIDENT

Refer to EC-1245.

>> **INSPECTION END**

Component Inspection

INFOID:0000000005286243

FUEL INJECTOR

1. Disconnect fuel injector harness connector.
2. Check resistance between terminals as shown in the figure.

Resistance: 10.4 - 15.3 Ω [at 10 - 60°C (50 - 140°F)]

3. If NG, replace fuel injector.

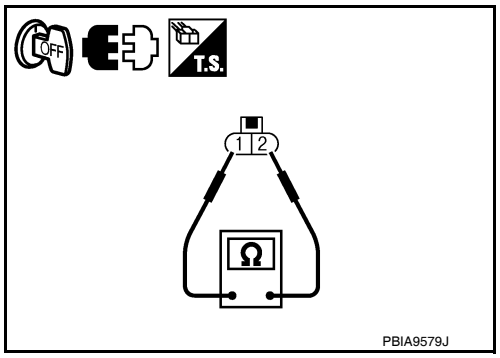

Removal and Installation

INFOID:0000000005286244

FUEL INJECTOR

Refer to EM-148.

FUEL PUMP

Description

INFOID:0000000005286245

SYSTEM DESCRIPTION

Sensor	Input Signal to ECM	ECM Function	Actuator
Crankshaft position sensor (POS) Camshaft position sensor (PHASE)	Engine speed*	Fuel pump control	Fuel pump relay
Battery	Battery voltage*		

*: ECM determines the start signal status by the signals of engine speed and battery voltage.

The ECM activates the fuel pump for several seconds after the ignition switch is turned ON to improve engine start ability. If the ECM receives a engine speed signal from the crankshaft position sensor (POS) and camshaft position sensor (PHASE), it knows that the engine is rotating, and causes the pump to operate. If the engine speed signal is not received when the ignition switch is ON, the engine stalls. The ECM stops pump operation and prevents battery discharging, thereby improving safety. The ECM does not directly drive the fuel pump. It controls the ON/OFF fuel pump relay, which in turn controls the fuel pump.

Condition	Fuel pump operation
Ignition switch is turned to ON	Operates for 1 second
Engine running and cranking	Operates
Engine: Stopped	Stops in 1.5 seconds
Except as shown above	Stops

COMPONENT DESCRIPTION

A turbine type design fuel pump is used in the fuel tank.

- Fuel level sensor unit and fuel pump (1)
- Fuel pressure regulator (2)
- Fuel level sensor (3)
- Fuel tank temperature sensor (4)

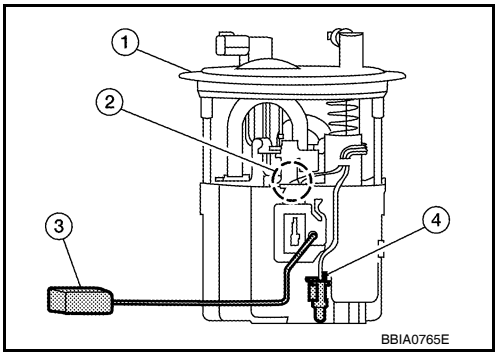

CONSULT-III Reference Value in Data Monitor Mode

INFOID:0000000005286246

Specification data are reference values.

Monitor item	Condition	Specification
FUEL PUMP RLY	• For 1 second after turning ignition switch ON • Engine running or cranking	ON
	• Except above conditions	OFF

Wiring Diagram

INFOID:0000000005286247

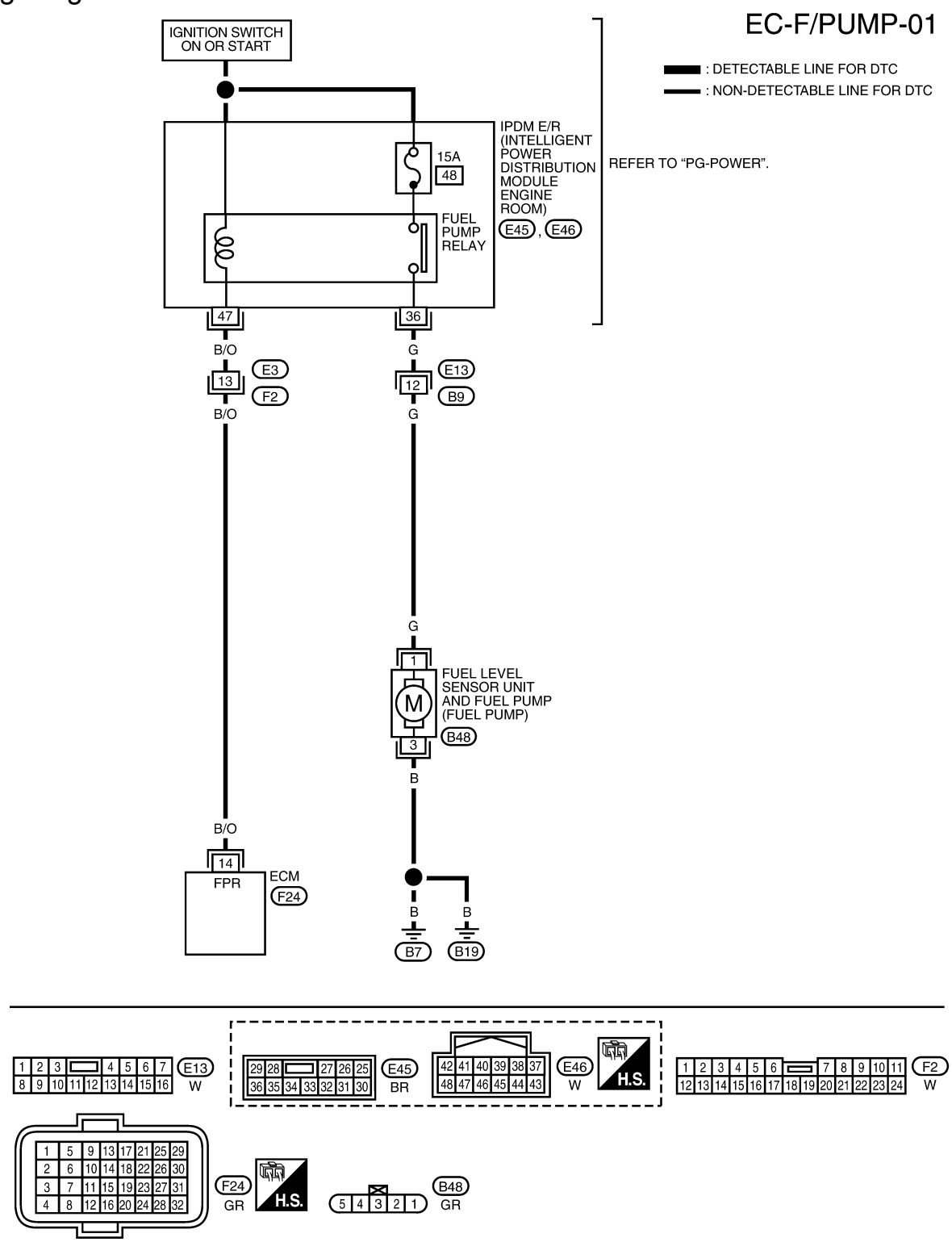

Specification data are reference values and are measured between each terminal and ground.

CAUTION:

Never use ECM ground terminals when measuring input/output voltage. Doing so may result in damage to the ECM's transistor. Use a ground other than ECM terminals, such as the ground.

TERMINAL NO.	WIRE COLOR	ITEM	CONDITION	DATA (DC Voltage)
14	B/O	Fuel pump relay	**[Ignition switch: ON]** • For 1 second after turning ignition switch ON **[Engine is running]**	0 - 1.0 V
			[Ignition switch: ON] • More than 1 second after turning ignition switch ON	BATTERY VOLTAGE (11 - 14 V)

Diagnosis Procedure

INFOID:0000000005286248

1. CHECK OVERALL FUNCTION

1. Turn ignition switch ON.
2. Pinch fuel feed hose (1) with two fingers.

- ⇦: Vehicle front

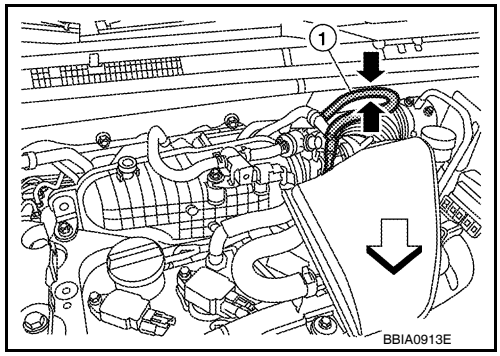

Fuel pressure pulsation should be felt on the fuel feed hose for 1 second after ignition switch is turned ON.

OK or NG

OK >> **INSPECTION END**
NG >> GO TO 2.

2. CHECK FUEL PUMP POWER SUPPLY CIRCUIT-I

1. Turn ignition switch OFF.
2. Disconnect ECM harness connector.
3. Turn ignition switch ON.
4. Check voltage between ECM terminal 14 and ground with CONSULT-III or tester.

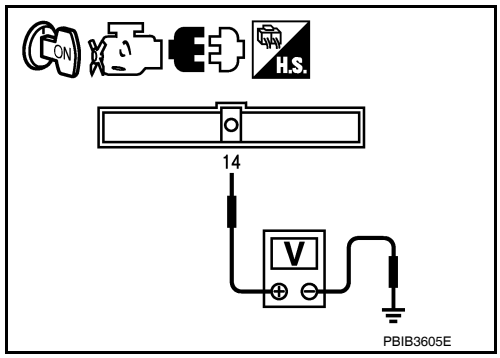

Voltage: Battery voltage

OK or NG

OK >> GO TO 5.
NG >> GO TO 3.

3. CHECK FUEL PUMP POWER SUPPLY CIRCUIT-II

1. Turn ignition switch OFF.
2. Disconnect IPDM E/R harness connector E46.
3. Turn ignition switch ON.
4. Check voltage between IPDM E/R terminal 47 and ground with CONSULT-III or tester.

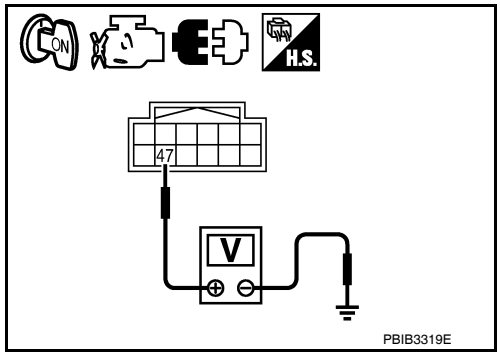

Voltage: Battery voltage

OK or NG

OK >> GO TO 4.
NG >> GO TO 11.

4. DETECT MALFUNCTIONING PART

Check the following.
- Harness connectors E3, F2
- Harness for open or short between IPDM E/R and ECM

>> Repair open circuit or short to ground or short to power in harness or connectors.

5. CHECK FUEL PUMP POWER SUPPLY CIRCUIT-III

1. Turn ignition switch OFF.
2. Reconnect all harness connectors disconnected.
3. Disconnect “fuel level sensor unit and fuel pump” harness connector (1).
- This illumination is shows the view with inspection hole cover removed.
4. Turn ignition switch ON.

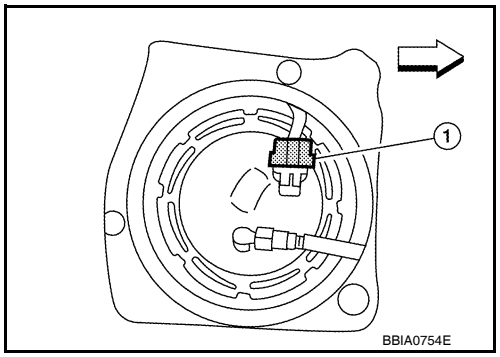

5. Check voltage between “fuel level sensor unit and fuel pump” terminal 1 and ground with CONSULT-III or tester.

Voltage: Battery voltage should exist for 1 second after ignition switch is turned ON.

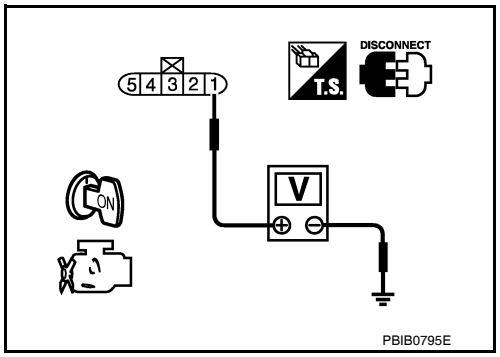

OK or NG

OK >> GO TO 9.
NG >> GO TO 6.

6. CHECK 15A FUSE

1. Turn ignition switch OFF.
2. Disconnect 15A fuse.
3. Check 15A fuse.

OK or NG

OK >> GO TO 7.
NG >> Replace fuse.

7. CHECK FUEL PUMP POWER SUPPLY CIRCUIT-IV

1. Disconnect IPDM E/R harness connector E45.
2. Check harness continuity between IPDM E/R terminal 36 and “fuel level sensor unit and fuel pump” terminal 1. Refer to Wiring Diagram.

Continuity should exist.

3. Also check harness for short to ground and short to power.

OK or NG

OK >> GO TO 11.
NG >> GO TO 8.

8. DETECT MALFUNCTIONING PART

Check the following.
- Harness connectors E13, B9
- Harness for open or short between IPDM E/R and “fuel level sensor unit and fuel pump”

>> Repair open circuit or short to ground or short to power in harness or connectors.

9. CHECK FUEL PUMP GROUND CIRCUIT

1. Check harness continuity between “fuel level sensor unit and fuel pump” terminal 3 and ground. Refer to Wiring Diagram.

Continuity should exist.

2. Also check harness for short to power.

OK or NG

OK >> GO TO 10.
NG >> Repair or replace harness or connectors.

10. CHECK FUEL PUMP

Refer to EC-1656, "Component Inspection".

OK or NG

OK >> GO TO 11.
NG >> Replace fuel pump.

11. CHECK INTERMITTENT INCIDENT

Refer to EC-1245.

OK or NG

OK >> Replace IPDM E/R. Refer to PG-17.
NG >> Repair or replace harness or connectors.

Component Inspection

INFOID:0000000005286249

FUEL PUMP

1. Disconnect “fuel level sensor unit and fuel pump” harness connector.
2. Check resistance between “fuel level sensor unit and fuel pump” terminals 1 and 3.

Resistance: Approximately 0.2 - 5.0 Ω [at 25°C (77°F)]

3. If NG, replace “fuel level sensor unit and fuel pump”.

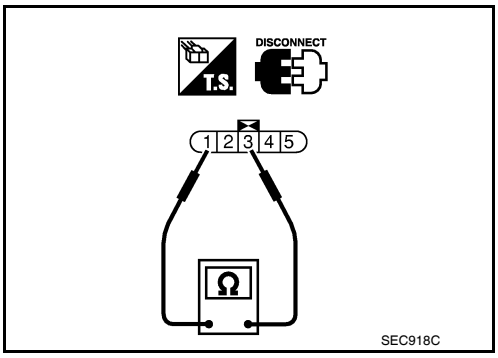

Removal and Installation

INFOID:0000000005286250

FUEL PUMP

Refer to FL-6.

IGNITION SIGNAL

Component Description

INFOID:0000000005286251

IGNITION COIL & POWER TRANSISTOR

The ignition signal from the ECM is sent to and amplified by the power transistor. The power transistor turns ON and OFF the ignition coil primary circuit. This ON/OFF operation induces the proper high voltage in the coil secondary circuit.

- Ignition coil harness connector (1)
- ⇦: Vehicle front

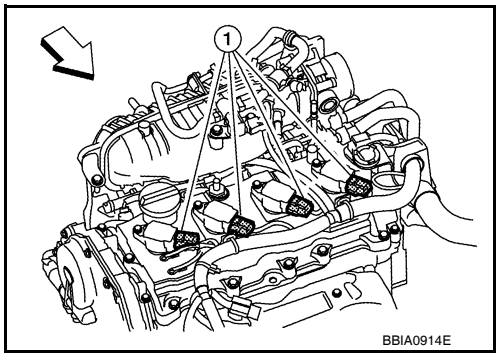

Wiring Diagram

INFOID:0000000005286252

EC-IGNSYS-01

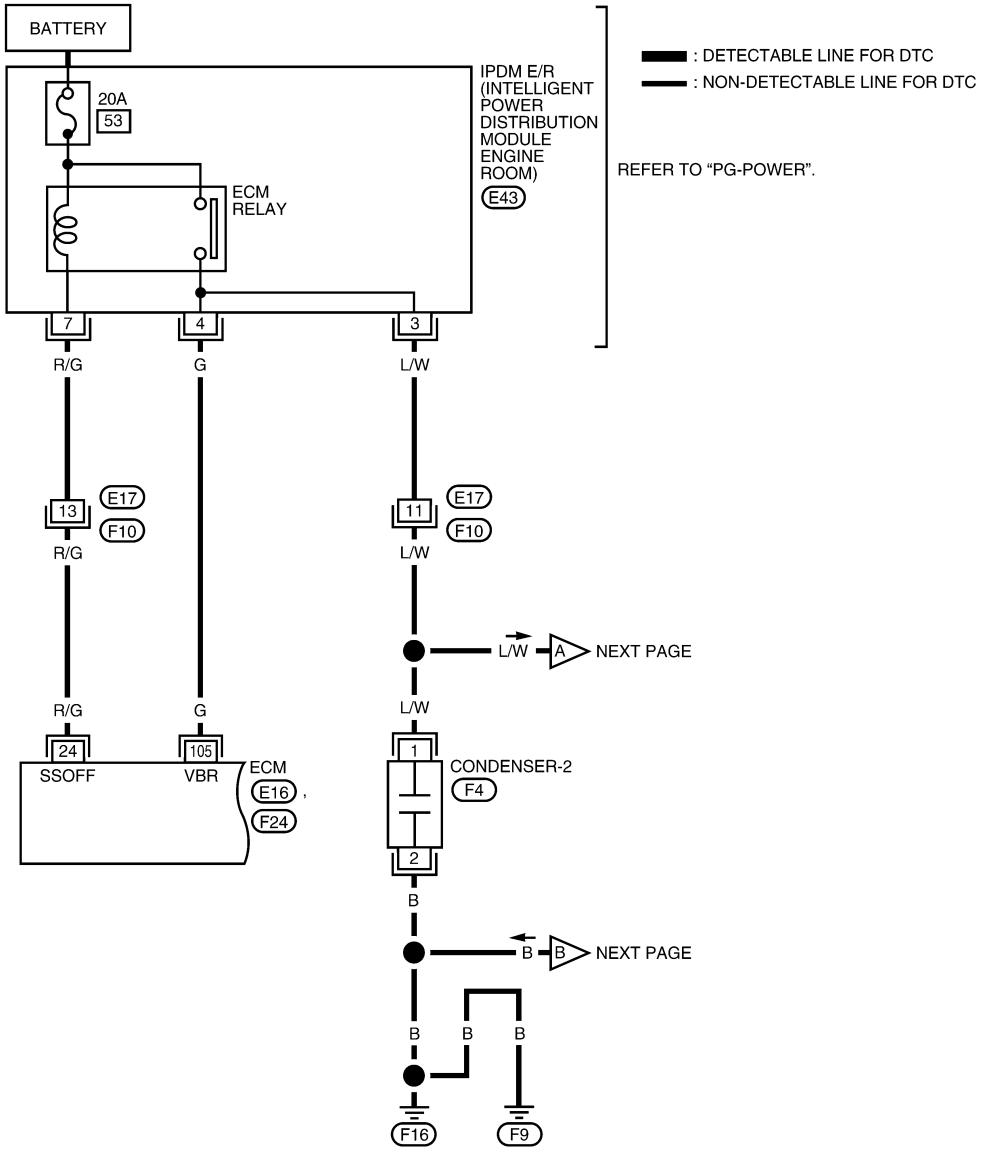

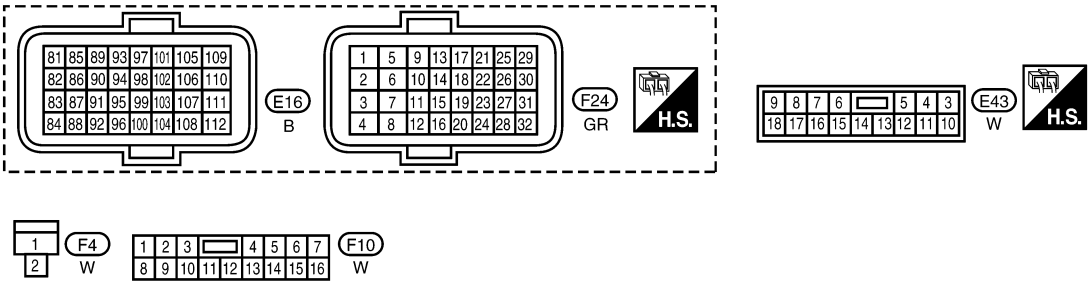

AABWA0271GB

Specification data are reference values and are measured between each terminal and ground.

CAUTION:

Never use ECM ground terminals when measuring input/output voltage. Doing so may result in damage to the ECM's transistor. Use a ground other than ECM terminals, such as the ground.

TERMINAL NO.	WIRE COLOR	ITEM	CONDITION	DATA (DC Voltage)
24	R/G	ECM relay (Self shut-off)	**[Engine is running]** **[Ignition switch: OFF]** • For a few seconds after turning ignition switch OFF	0 - 1.0 V
			[Ignition switch: OFF] • More than a few seconds after turning ignition switch OFF	BATTERY VOLTAGE (11 - 14 V)
105	G	Power supply for ECM	**[Ignition switch: ON]**	BATTERY VOLTAGE (11 - 14 V)

EC-IGNSYS-02

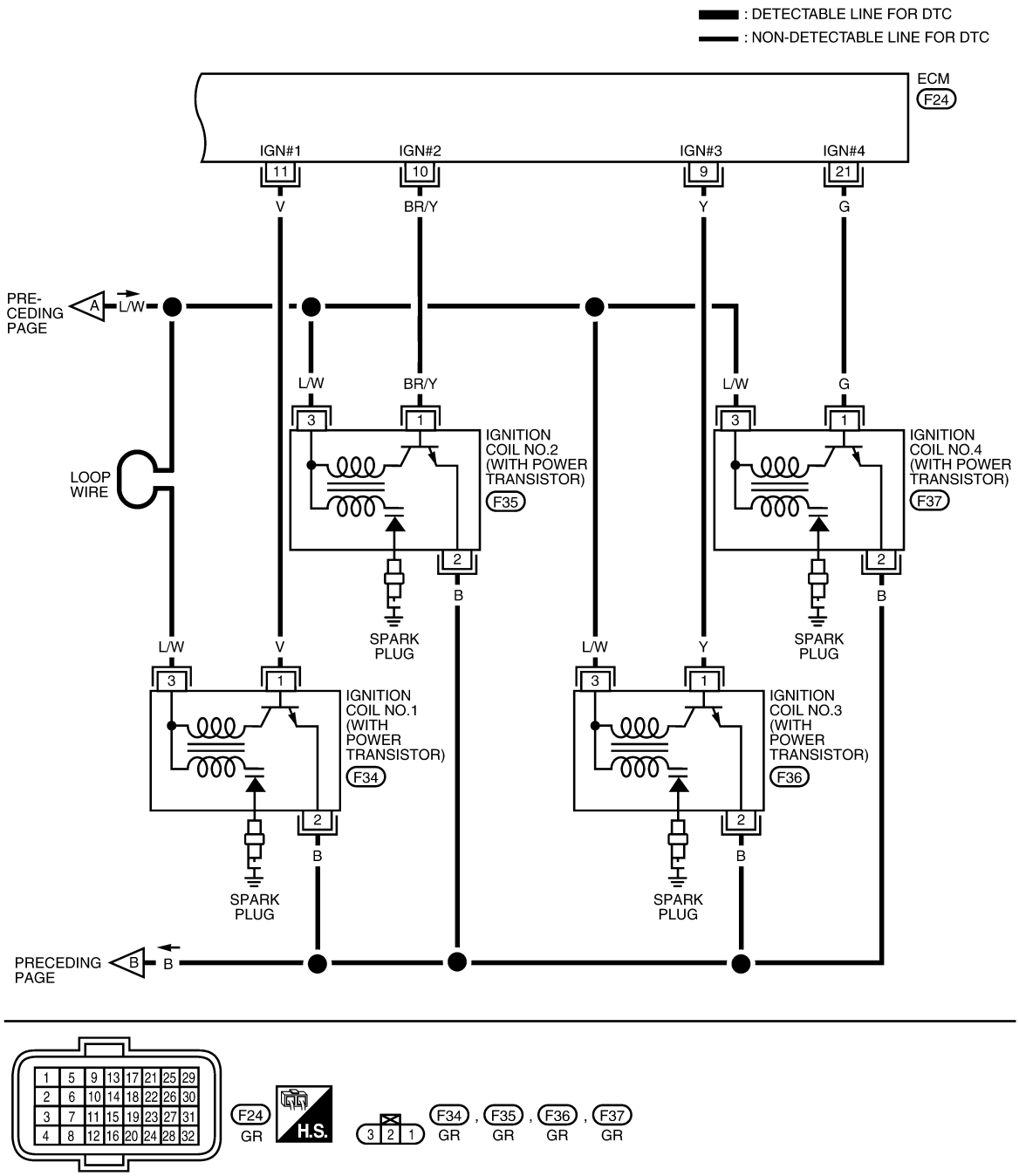

Specification data are reference values and are measured between each terminal and ground.
Pulse signal is measured by CONSULT-III.

CAUTION:

Never use ECM ground terminals when measuring input/output voltage. Doing so may result in damage to the ECM's transistor. Use a ground other than ECM terminals, such as the ground.

TERMINAL NO.	WIRE COLOR	ITEM	CONDITION	DATA (DC Voltage)
9 10 11 21	Y BR/Y V G	Ignition signal No. 3 Ignition signal No. 2 Ignition signal No. 1 Ignition signal No. 4	**[Engine is running]** • **Warm-up condition** • Idle speed **NOTE:** The pulse cycle changes depending on rpm at idle	0 - 0.1 V★ 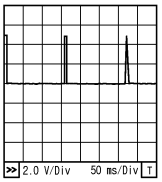 PBIA9265J
			[Engine is running] • **Warm-up condition** • Engine speed: 2,500 rpm	0 - 0.2 V★ 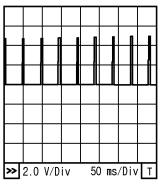 PBIA9266J

★: Average voltage for pulse signal (Actual pulse signal can be confirmed by oscilloscope.)

Diagnosis Procedure

INFOID:0000000005286253

1. CHECK ENGINE START

Turn ignition switch OFF, and restart engine.
Is engine running?

Yes or No

Yes (With CONSULT-III)>>GO TO 2.
Yes (Without CONSULT-III)>>GO TO 3.
No >> GO TO 4.

2. CHECK OVERALL FUNCTION

With CONSULT-III

1. Perform “POWER BALANCE” in “ACTIVE TEST” mode with CONSULT-III.
2. Check that each circuit produces a momentary engine speed drop.

OK or NG

OK >> **INSPECTION END**
NG >> GO TO 10.

3. CHECK OVERALL FUNCTION

Without CONSULT-III

1. Let engine idle.
2. Read the voltage signal between ECM terminals 9, 10, 11, 21 and ground with an oscilloscope.
3. Verify that the oscilloscope screen shows the signal wave as shown below.
   NOTE:
   The pulse cycle changes depending on rpm at idle.

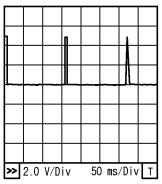

PBIA9265J

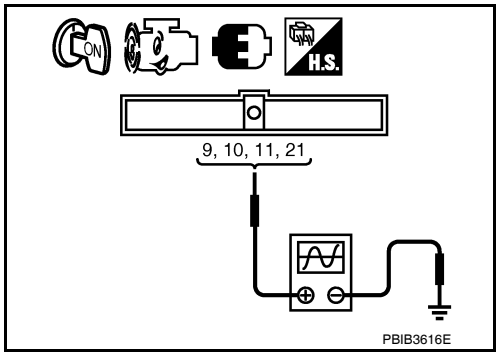

PBIB3616E

OK or NG

OK >> **INSPECTION END**
NG >> GO TO 10.

4. CHECK IGNITION COIL POWER SUPPLY CIRCUIT-I

1. Turn ignition switch OFF, wait at least 10 seconds and then turn ON.
2. Check voltage between ECM terminal 105 and ground with CONSULT-III or tester.

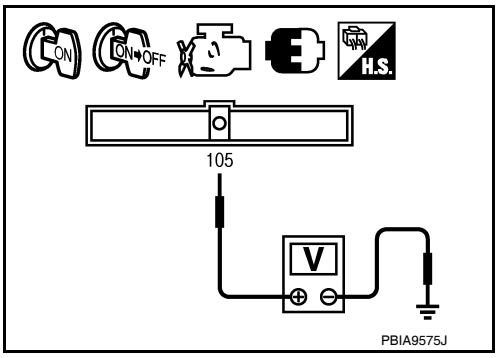

Voltage: Battery voltage

OK or NG

OK >> GO TO 5.
NG >> Go to EC-1246.

5. CHECK IGNITION COIL POWER SUPPLY CIRCUIT-II

1. Turn ignition switch OFF.
2. Disconnect condenser-2 harness connector.
3. Turn ignition switch ON.
4. Check voltage between condenser-2 terminal 1 and ground with CONSULT-III or tester.

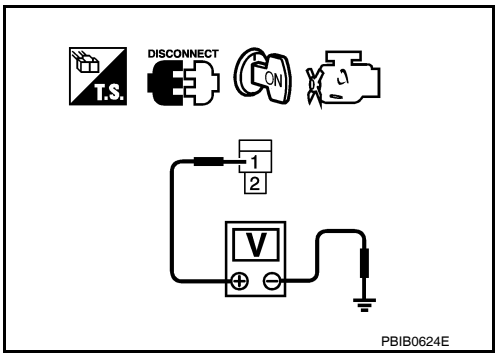

Voltage: Battery voltage

OK or NG

OK >> GO TO 8.
NG >> GO TO 6.

6. CHECK IGNITION COIL POWER SUPPLY CIRCUIT-III

1. Turn ignition switch OFF.
2. Disconnect IPDM E/R harness connector E43.
3. Check harness continuity between IPDM E/R terminal 3 and condenser-2 terminal 1. Refer to Wiring Diagram.

Continuity should exist.

4. Also check harness for short to ground and short to power.

OK or NG

OK >> Go to EC-1246.
NG >> GO TO 7.

7. DETECT MALFUNCTIONING PART

Check the following.
- Harness connectors E17, F10
- Harness for open or short between IPDM E/R and condenser-2

>> Repair open circuit or short to ground or short to power in harness or connectors.

8. CHECK CONDENSER-2 GROUND CIRCUIT FOR OPEN AND SHORT

1. Turn ignition switch OFF.
2. Check harness continuity between condenser-2 terminal 2 and ground. Refer to Wiring Diagram.

Continuity should exist.

3. Also check harness for short to power.

OK or NG

OK >> GO TO 9.
NG >> Repair open circuit or short to power in harness or connectors.

9. CHECK CONDENSER-2

Refer to EC-1664, "Component Inspection"

OK or NG

OK >> GO TO 10.
NG >> Replace condenser-2.

10. CHECK IGNITION COIL POWER SUPPLY CIRCUIT-IV

1. Turn ignition switch OFF.
2. Reconnect all harness connectors disconnected.
3. Disconnect ignition coil harness connector (1).
4. Turn ignition switch ON.

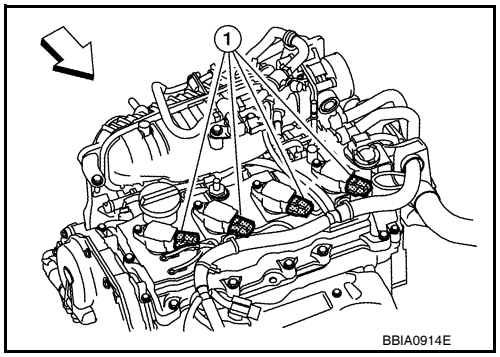

5. Check voltage between ignition coil terminal 3 and ground with CONSULT-III or tester.

Voltage: Battery voltage

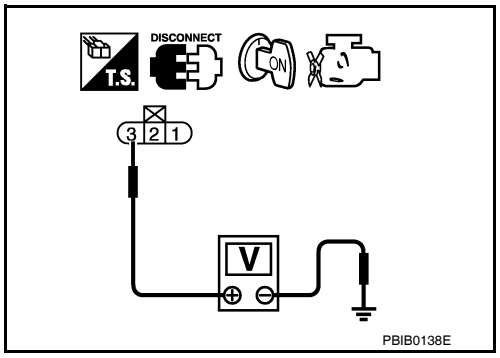

OK or NG

OK >> GO TO 12.
NG >> GO TO 11.

11. DETECT MALFUNCTIONING PART

Check the following.
- Harness connector F10
- Harness for open or short between ignition coil and harness connector F10

>> Repair or replace harness or connectors.

12. CHECK IGNITION COIL GROUND CIRCUIT FOR OPEN AND SHORT

1. Turn ignition switch OFF.
2. Check harness continuity between ignition coil terminal 2 and ground. Refer to Wiring Diagram.

Continuity should exist.

3. Also check harness for short to power.

OK or NG

OK >> GO TO 13.
NG >> Repair open circuit or short to power in harness or connectors.

13. CHECK IGNITION COIL OUTPUT SIGNAL CIRCUIT FOR OPEN AND SHORT

1. Disconnect ECM harness connector.
2. Check harness continuity between ECM terminals 9, 10, 11, 21 and ignition coil terminal 1.
   Refer to Wiring Diagram.

   Continuity should exist.

3. Also check harness for short to ground and short to power.

OK or NG

OK >> GO TO 14.
NG >> Repair open circuit or short to ground or short to power in harness or connectors.

14. CHECK IGNITION COIL WITH POWER TRANSISTOR

Refer to EC-1664, "Component Inspection".

OK or NG

OK >> GO TO 15.
NG >> Replace malfunctioning ignition coil with power transistor.

15. CHECK INTERMITTENT INCIDENT

Refer to EC-1245.

>> **INSPECTION END**

Component Inspection

INFOID:0000000005286254

IGNITION COIL WITH POWER TRANSISTOR

CAUTION:

Perform the following procedure in a place with no combustible objects and good ventilation.

1. Turn ignition switch OFF.
2. Disconnect ignition coil harness connector.
3. Check resistance between ignition coil terminals as follows.

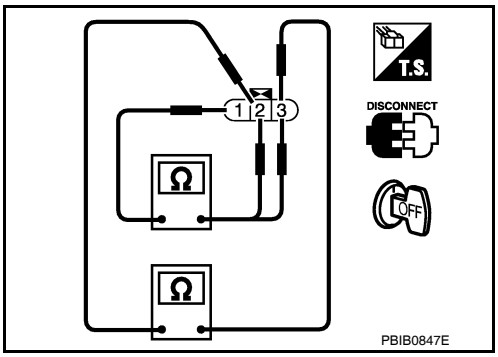

Terminal No. (Polarity)	Resistance Ω [at 25°C (77°F)]
1 and 2	Except 0 or ∞
1 and 3	Except 0
2 and 3	

4. If NG, replace ignition coil with power transistor.
   If OK, go to next step.
5. Turn ignition switch OFF.
6. Reconnect all harness connectors disconnected.
7. Remove fuel pump fuse (1) in IPDM E/R (2) to release fuel pressure.
   NOTE:
   Do not use CONSULT-III to release fuel pressure, or fuel pressure applies again during the following procedure.

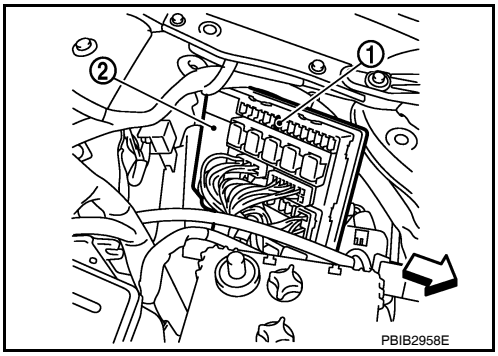

- ⇦: Vehicle front

8. Start engine.
9. After engine stalls, crank it two or three times to release all fuel pressure.
10. Turn ignition switch OFF.
11. Remove all ignition coil harness connectors to avoid the electrical discharge from the ignition coils.
12. Remove ignition coil and spark plug of the cylinder to be checked.
13. Crank engine for 5 seconds or more to remove combustion gas in the cylinder.
14. Connect spark plug and harness connector to ignition coil.

15. Fix ignition coil using a rope etc. with gap of 13 - 17 mm (0.52 – between the edge of the spark plug and grounded metal portion as shown in the figure.
16. Crank engine for approximately 3 seconds, and check whether spark is generated between the spark plug and the grounded metal portion.

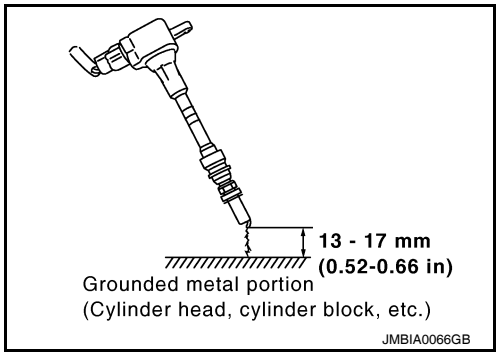

Spark should be generated.

CAUTION:
- **During the operation, always stay 0.5 m (19.7 in) or more away from the spark plag and the ignition coil. Be careful not to get an electrical shock while checking, because the electrical discharge voltage becomes 20 kV or more.**
- **It might cause to damage the ignition coil if the gap of more than 17 mm (0.66 in) is made.**

NOTE:
When the gap is less than 13 mm (0.52 in), a the spark might be generated even if the coil is malfunctioning.

17. If NG, replace ignition coil with power transistor.

CONDENSER-2

1. Turn ignition switch OFF.
2. Disconnect condenser-2 harness connector.
3. Check resistance between condenser-2 terminals 1 and 2.

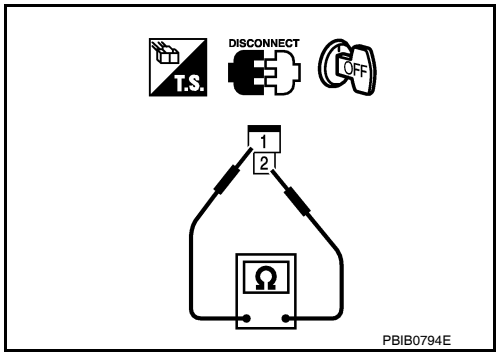

Resistance: Above 1 MΩ [at 25°C (77°F)]

4. If NG, replace condenser-2.

Removal and Installation

INFOID:0000000005286255

IGNITION COIL WITH POWER TRANSISTOR

Refer to EM-145.

REFRIGERANT PRESSURE SENSOR

Component Description

INFOID:0000000005286256

The refrigerant pressure sensor (1) is installed at the condenser of the air conditioner system. The sensor uses an electrostatic volume pressure transducer to convert refrigerant pressure to voltage. The voltage signal is sent to ECM, and ECM controls cooling fan system.

- ⇦: Vehicle front

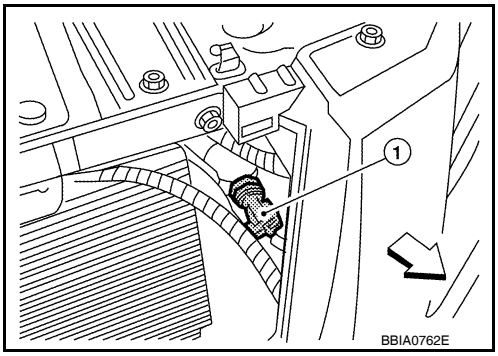

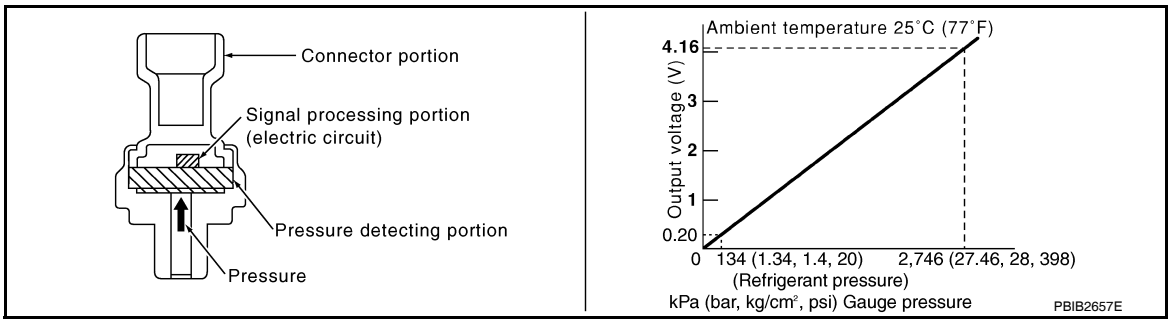

Wiring Diagram

INFOID:0000000005286257

EC-RP/SEN-01

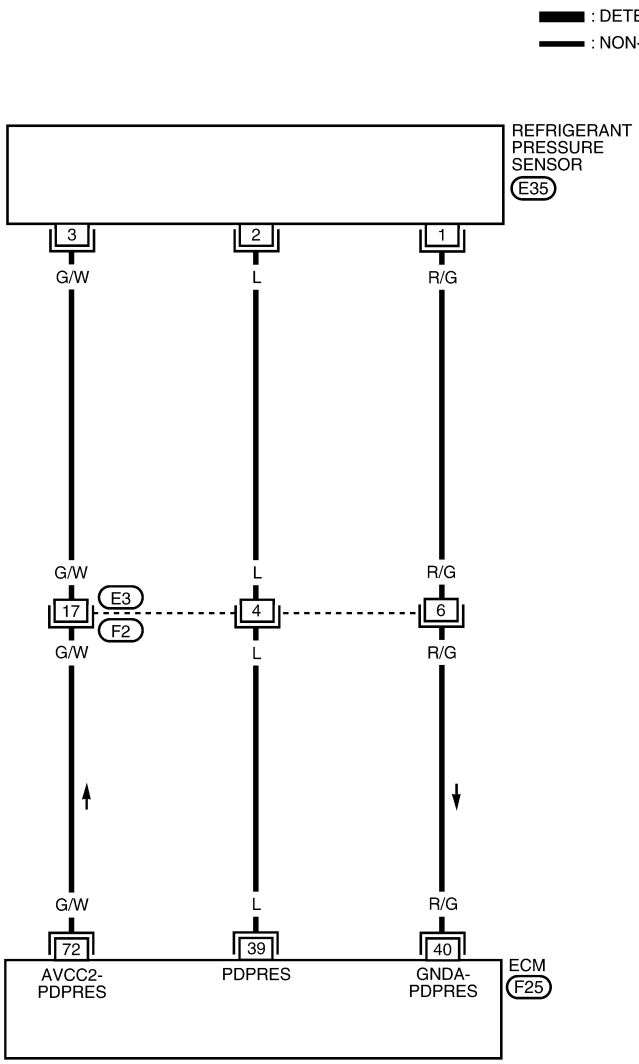

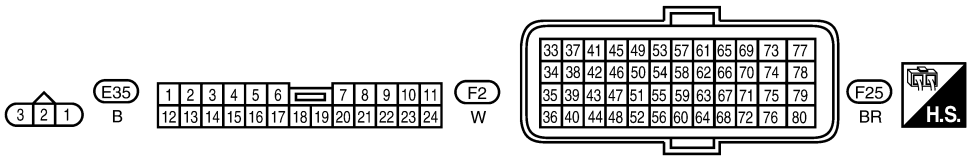

BBWA3066E

Specification data are reference values and are measured between each terminal and ground.

CAUTION:

Never use ECM ground terminals when measuring input/output voltage. Doing so may result in damage to the ECM's transistor. Use a ground other than ECM terminals, such as the ground.

TERMINAL NO.	WIRE COLOR	ITEM	CONDITION	DATA (DC Voltage)
39	L	Refrigerant pressure sensor	**[Engine is running]** • **Warm-up condition** • Both A/C switch and blower fan switch: ON (Compressor operates)	1.0 - 4.0 V
40	R/G	Sensor ground (Refrigerant pressure sensor)	**[Engine is running]** • **Warm-up condition** • Idle speed	Approximately 0 V
72	G/W	Sensor power supply (Refrigerant pressure sensor)	**[Ignition switch: ON]**	Approximately 5 V

Diagnosis Procedure

INFOID:0000000005286258

1. CHECK REFRIGERANT PRESSURE SENSOR OVERALL FUNCTION

1. Start engine and warm it up to normal operating temperature.
2. Turn A/C switch and blower fan switch ON.
3. Check voltage between ECM terminal 39 and ground with CONSULT-III or tester.

Voltage: 1.0 - 4.0 V

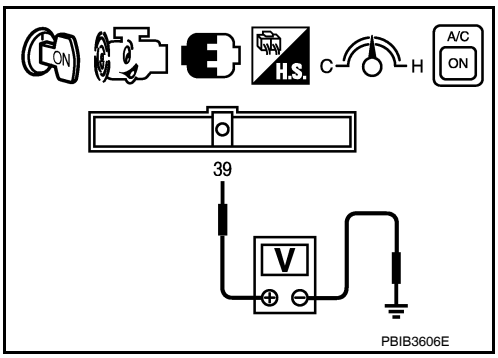

OK or NG

OK >> **INSPECTION END**
NG >> GO TO 2.

2. CHECK GROUND CONNECTIONS

1. Turn A/C switch and blower fan switch OFF.
2. Stop engine and turn ignition switch OFF.
3. Loosen and retighten ground screws on the body.
   Refer to EC-1251, "Ground Inspection".

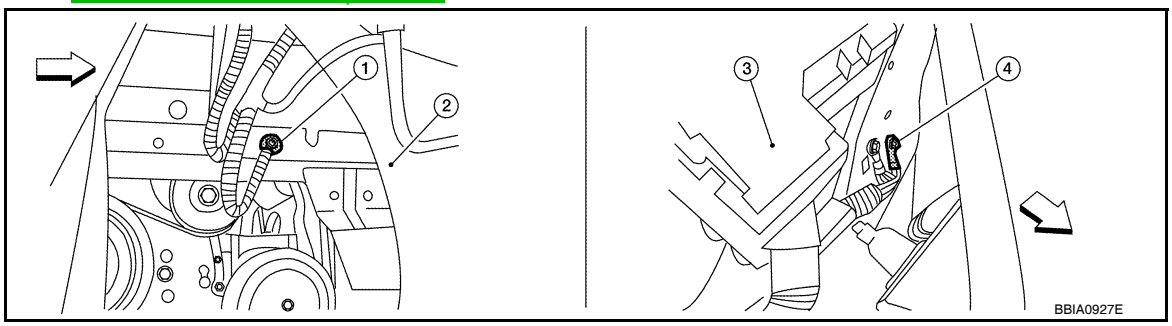

⇦: Vehicle front

1. Body ground E9 (view with front wheel RH and fender protector RH removed.)
2. Washer tank
3. Fuse and fusible link box
4. Body ground E15

OK or NG

OK >> GO TO 3.
NG >> Repair or replace ground connections.

3. CHECK REFRIGERANT PRESSURE SENSOR POWER SUPPLY CIRCUIT

1. Disconnect refrigerant pressure sensor (1) harness connector.
- ⇦: Vehicle front
2. Turn ignition switch ON.

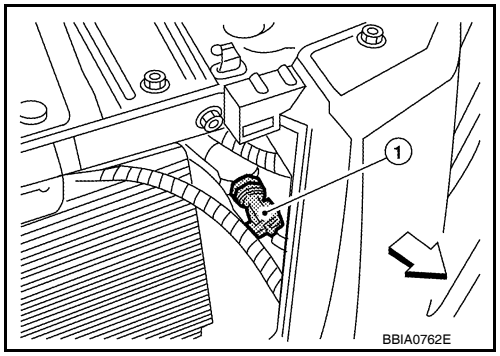

3. Check voltage between refrigerant pressure sensor terminal 3 and ground with CONSULT-III or tester.

Voltage: Approximately 5 V

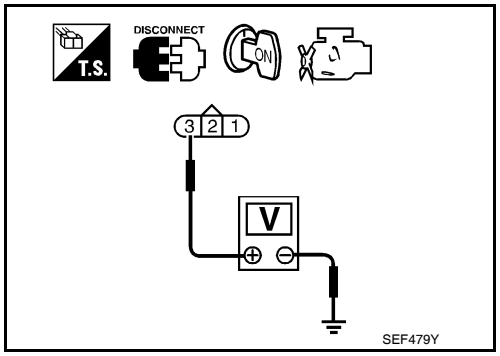

OK or NG

OK >> GO TO 5.
NG >> GO TO 4.

4. DETECT MALFUNCTIONING PART

Check the following.
- Harness connectors E3, F2
- Harness for open or short between refrigerant pressure sensor and ECM

>> Repair open circuit or short to ground or short to power in harness or connectors.

5. CHECK REFRIGERANT PRESSURE SENSOR GROUND CIRCUIT FOR OPEN AND SHORT

1. Turn ignition switch OFF.
2. Disconnect ECM harness connector.
3. Check harness continuity between refrigerant pressure sensor terminal 1 and ECM terminal 40. Refer to Wiring Diagram.

Continuity should exist.

4. Also check harness for short to ground and short to power.

OK or NG

OK >> GO TO 7.
NG >> GO TO 6.

6. DETECT MALFUNCTIONING PART

Check the following.
- Harness connectors E3, F2
- Harness for open or short between refrigerant pressure sensor and ECM

>> Repair open circuit or short to ground or short to power in harness or connectors.

7. CHECK REFRIGERANT PRESSURE SENSOR INPUT SIGNAL CIRCUIT FOR OPEN AND SHORT

1. Check harness continuity between refrigerant pressure sensor terminal 2 and ECM terminal 39. Refer to Wiring Diagram.

Continuity should exist.

2. Also check harness for short to ground and short to power.

OK or NG

OK >> GO TO 9.
NG >> GO TO 8.

8. DETECT MALFUNCTIONING PART

Check the following.
- Harness connectors E3, F2
- Harness for open or short between refrigerant pressure sensor and ECM

>> Repair open circuit or short to ground or short to power in harness or connectors.

9. CHECK INTERMITTENT INCIDENT

Refer to EC-1245.

OK or NG

OK >> Replace refrigerant pressure sensor.
NG >> Repair or replace.

Removal and Installation

INFOID:0000000005286259

REFRIGERANT PRESSURE SENSOR

Refer to MTC-88, "Removal and Installation for Refrigerant Pressure Sensor".

MIL AND DATA LINK CONNECTOR

Wiring Diagram

INFOID:0000000005286260

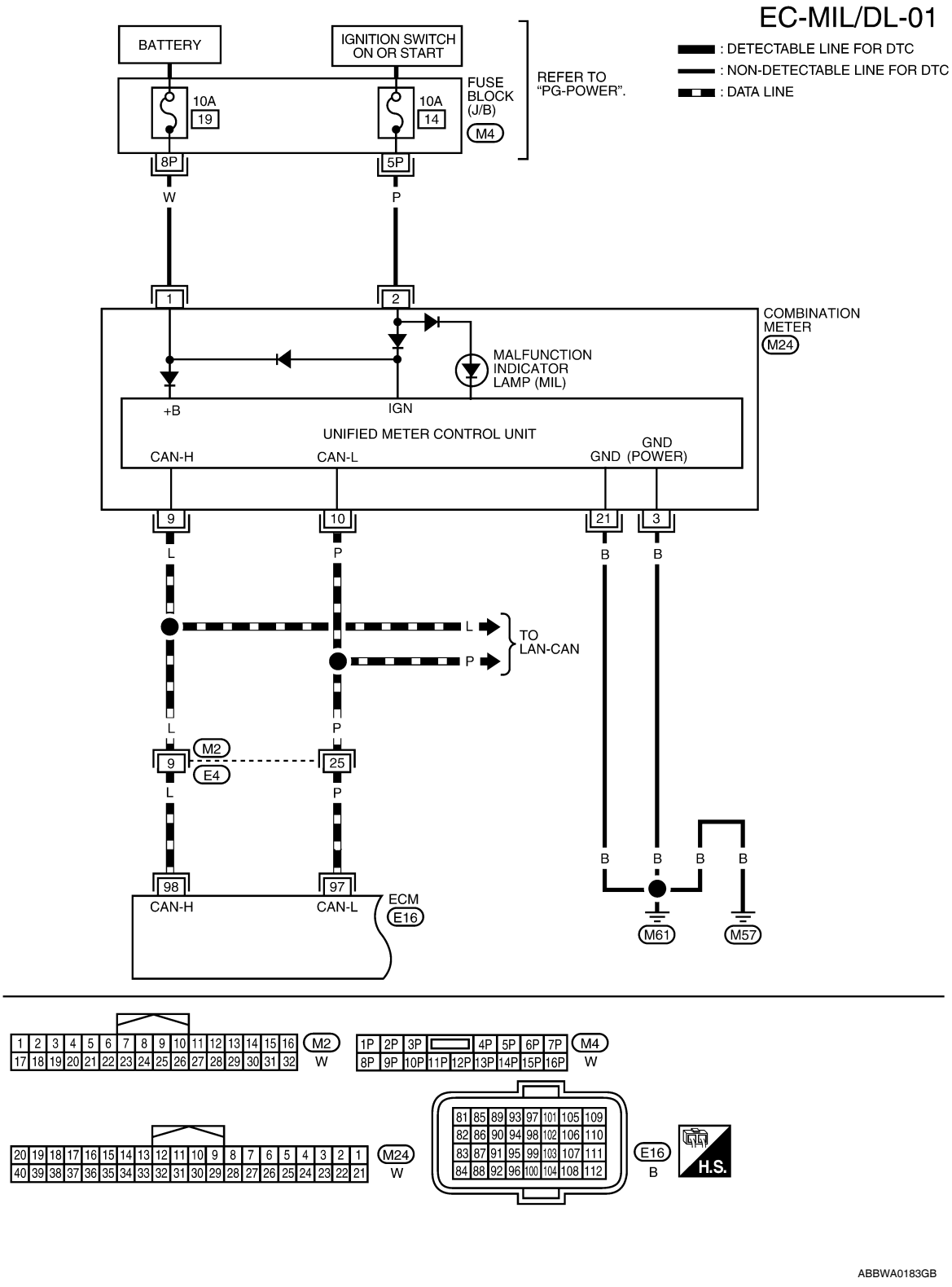

ABBWA0183GB

EC-MIL/DL-02

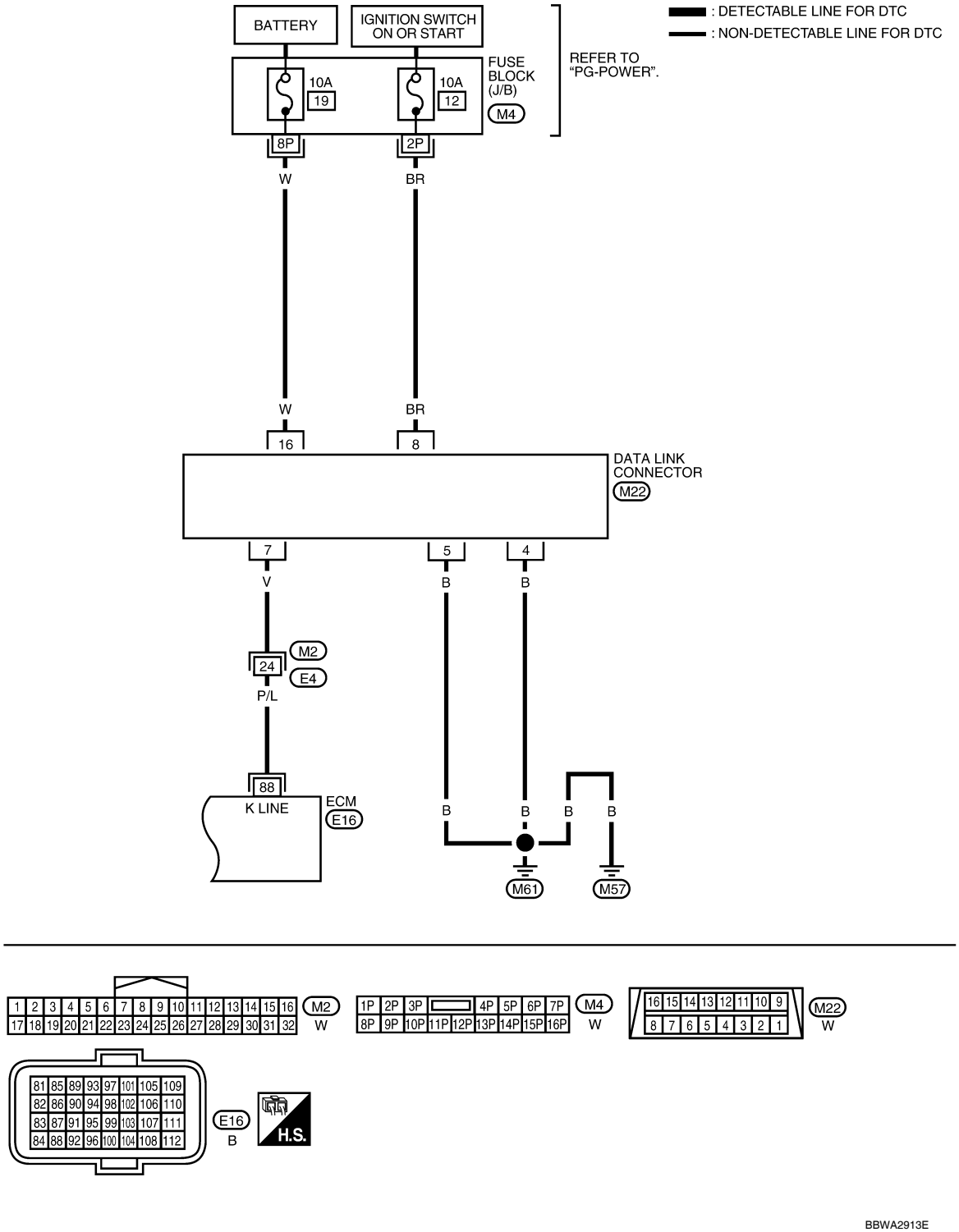
BATTERY
IGNITION SWITCH ON OR START
FUSE BLOCK (J/B)
M4
10A 19
10A 12
REFER TO "PG-POWER".
: DETECTABLE LINE FOR DTC
: NON-DETECTABLE LINE FOR DTC
8P
2P
W
BR
16
8
DATA LINK CONNECTOR
M22
7
5
4
V
B
B
M2
24
E4
P/L
88
K LINE
ECM
E16
M61
M57
BBWA2913E

SERVICE DATA AND SPECIFICATIONS (SDS)

Fuel Pressure

INFOID:0000000005286261

Fuel pressure at idle	Approximately 350 kPa (3.57 kg/cm^2, 51 psi)

Idle Speed and Ignition Timing

INFOID:0000000005286262

Target idle speed	CVT	No load*1 (In P or N position)	650 ± 50 rpm
	M/T	No load*1 (in Neutral position)	800 ± 50 rpm
Air conditioner: ON	CVT	In P or N position	800 rpm or more
	M/T	In Neutral position	
Ignition timing	CVT	In P or N position	10 ± 5° BTDC
	M/T	In Neutral position	

*1: Under the following conditions:

- Air conditioner switch: OFF
- Electric load: OFF (Lights, heater fan & rear window defogger)
- Steering wheel: Kept in straight-ahead position

Calculated Load Value

INFOID:0000000005286263

	Calculated load value% (Using CONSULT-III or GST)
At idle	10 - 35
At 2,500 rpm	10 - 35

Mass Air Flow Sensor

INFOID:0000000005286264

Supply voltage	Battery voltage (11 - 14 V)
Output voltage at idle	0.9 - 1.1* V
Mass air flow (Using CONSULT-III or GST)	1.0 - 4.0 g·m/sec at idle* 4.0 - 10.0 g·m/sec at 2,500 rpm*

*: Engine is warmed up to normal operating temperature and running under no load.

Intake Air Temperature Sensor

INFOID:0000000005286265

Temperature °C (°F)	Resistance (kΩ)
25 (77)	1.800 - 2.200

Engine Coolant Temperature Sensor

INFOID:0000000005286266

Temperature °C (°F)	Resistance (kΩ)
20 (68)	2.1 - 2.9
50 (122)	0.68 - 1.00
90 (194)	0.236 - 0.260

Air Fuel Ratio (A/F) Sensor 1 Heater

INFOID:0000000005286267

Resistance [at 25°C (77°F)]	1.8 - 2.44 Ω

Heated Oxygen sensor 2 Heater

INFOID:0000000005286268

Resistance [at 25°C (77°F)]	3.4 - 4.4 Ω

Crankshaft Position Sensor (POS)

INFOID:0000000005286269

Refer to EC-1430, "Component Inspection".

Camshaft Position Sensor (PHASE)

INFOID:0000000005286270

Refer to EC-1435, "Component Inspection".

Throttle Control Motor

INFOID:0000000005286271

Resistance [at 25°C (77°F)]	Approximately 1 - 15 Ω

Fuel Injector

INFOID:0000000005286272

Resistance [at 10 - 60°C (50 - 140°F)]	10.4 - 15.3 Ω

Fuel Pump

INFOID:0000000005286273

Resistance [at 25°C (77°F)]	Approximately 0.2 - 5.0 Ω