SECTION MTC

MANUAL AIR CONDITIONER

CONTENTS

PRECAUTIONS

PFP:00001

Precautions for Supplemental Restraint System (SRS) “AIR BAG” and “SEAT BELT PRE-TENSIONER”

EJS0031M

The Supplemental Restraint System such as “AIR BAG” and “SEAT BELT PRE-TENSIONER”, used along with a front seat belt, helps to reduce the risk or severity of injury to the driver and front passenger for certain types of collision. This system includes seat belt switch inputs and dual stage front air bag modules. The SRS system uses the seat belt switches to determine the front air bag deployment, and may only deploy one front air bag, depending on the severity of a collision and whether the front occupants are belted or unbelted.
Information necessary to service the system safely is included in the SRS and SB section of this Service Manual.

WARNING:

- **To avoid rendering the SRS inoperative, which could increase the risk of personal injury or death in the event of a collision which would result in air bag inflation, all maintenance must be performed by an authorized NISSAN/INFINITI dealer.**
- **Improper maintenance, including incorrect removal and installation of the SRS, can lead to personal injury caused by unintentional activation of the system. For removal of Spiral Cable and Air Bag Module, see the SRS section.**
- **Do not use electrical test equipment on any circuit related to the SRS unless instructed to in this Service Manual. SRS wiring harnesses can be identified by yellow and/or orange harnesses or harness connectors.**

Precautions for Working with HFC-134a (R-134a)

EJS0031N

WARNING:

- **CFC-12 (R-12) refrigerant and HFC-134a (R-134a) refrigerant are not compatible. If the refrigerants are mixed compressor failure is likely to occur. Refer to MTC-4, "Contaminated Refrigerant" . To determine the purity of HFC-134a (R-134a) in the vehicle and recovery tank, use recovery/recycling equipment and refrigerant identifier.**
- **Use only specified oil for the HFC-134a (R-134a) A/C system and HFC-134a (R-134a) components. If oil other than that specified is used, compressor failure is likely to occur.**
- **The specified HFC-134a (R-134a) oil rapidly absorbs moisture from the atmosphere. The following handling precautions must be observed:**
  - **When removing refrigerant components from a vehicle, immediately cap (seal) the component to minimize the entry of moisture from the atmosphere.**
  - **When installing refrigerant components to a vehicle, do not remove the caps (unseal) until just before connecting the components. Connect all refrigerant loop components as quickly as possible to minimize the entry of moisture into system.**
  - **Only use the specified oil from a sealed container. Immediately reseal containers of oil. Without proper sealing, oil will become moisture saturated and should not be used.**
  - **Avoid breathing A/C refrigerant and oil vapor or mist. Exposure may irritate eyes, nose and throat. Remove HFC-134a (R-134a) from the A/C system using certified service equipment meeting requirements of SAE J2210 [HFC-134a (R-134a) recycling equipment], or J2209 [HFC-134a (R-134a) recovery equipment]. If accidental system discharge occurs, ventilate work area before resuming service. Additional health and safety information may be obtained from refrigerant and oil manufacturers.**
  - **Do not allow oil, NISSAN A/C System Oil Type S (DH-PS) or equivalent, to come in contact with styrofoam parts. Damage may result.**

Contaminated Refrigerant

EJS0031O

If a refrigerant other than pure HFC-134a (R-134a) is identified in a vehicle, your options are:

- Explain to the customer that environmental regulations prohibit the release of contaminated refrigerant into the atmosphere.
- Explain that recovery of the contaminated refrigerant could damage your service equipment and refrigerant supply.
- Suggest the customer return the vehicle to the location of previous service where the contamination may have occurred.

- If you choose to perform the repair, recover the refrigerant using only **dedicated equipment and containers. Do not recover contaminated refrigerant into your existing service equipment.** If your facility does not have dedicated recovery equipment, you may contact a local refrigerant product retailer for available service. This refrigerant must be disposed of in accordance with all federal and local regulations. In addition, replacement of all refrigerant system components on the vehicle is recommended.
- If the vehicle is within the warranty period, the air conditioner warranty is void. Please contact NISSAN Customer Affairs for further assistance.

General Refrigerant Precautions

EJS0031P

WARNING:

- **Do not release refrigerant into the air. Use approved recovery/recycling equipment to capture the refrigerant every time an air conditioning system is discharged.**
- **Always wear eye and hand protection (goggles and gloves) when working with any refrigerant or air conditioning system.**
- **Do not store or heat refrigerant containers above 52°C (125°F).**
- **Do not heat a refrigerant container with an open flame; if container warming is required, place the bottom of the container in a warm pail of water.**
- **Do not intentionally drop, puncture, or incinerate refrigerant containers.**
- **Keep refrigerant away from open flames: poisonous gas will be produced if refrigerant burns.**
- **Refrigerant will displace oxygen, therefore be certain to work in well ventilated areas to prevent suffocation.**
- **Do not pressure test or leak test HFC-134a (R-134a) service equipment and/or vehicle air conditioning systems with compressed air during repair. Some mixtures of air and HFC-134a (R-134a) have been shown to be combustible at elevated pressures. These mixtures, if ignited, may cause injury or property damage. Additional health and safety information may be obtained from refrigerant manufacturers.**

Precautions for Leak Detection Dye

EJS0031Q

- The A/C system contains a fluorescent leak detection dye used for locating refrigerant leaks. An ultraviolet (UV) lamp is required to illuminate the dye when inspecting for leaks.
- Always wear fluorescence enhancing UV safety goggles to protect your eyes and enhance the visibility of the fluorescent dye.
- The fluorescent dye leak detector is not a replacement for an electronic refrigerant leak detector. The fluorescent dye leak detector should be used in conjunction with an electronic refrigerant leak detector (J-41995).
- For your safety and the customer's satisfaction, read and follow all manufacturer's operating instructions and precautions prior to performing work.
- A compressor shaft seal should not be repaired because of dye seepage. The compressor shaft seal should only be repaired after confirming the leak with an electronic refrigerant leak detector (J-41995).
- Always remove any dye from the leak area after repairs are complete to avoid a misdiagnosis during a future service.
- Do not allow dye to come into contact with painted body panels or interior components. If dye is spilled, clean immediately with the approved dye cleaner. Fluorescent dye left on a surface for an extended period of time **cannot be removed** .
- Do not spray the fluorescent dye cleaning agent on hot surfaces (engine exhaust manifold, etc.).
- Do not use more than one refrigerant dye bottle (1/4 ounce / 7.4 cc) per A/C system.
- Leak detection dyes for HFC-134a (R-134a) and CFC-12 (R-12) A/C systems are different. Do not use HFC-134a (R-134a) leak detection dye in CFC-12 (R-12) A/C systems or CFC-12 (R-12) leak detection dye in HFC-134a (R-134a) A/C systems or A/C system damage may result.
- The fluorescent properties of the dye will remain for over three (3) years unless a compressor failure occurs.

A/C Identification Label

EJS0031R

Vehicles with factory installed fluorescent dye have this identification label on the underside of hood.

Precautions for Refrigerant Connection

EJS0031S

A new type refrigerant connection has been introduced to all refrigerant lines except the following locations.

- Expansion valve to cooling unit
- Evaporator pipes to evaporator (inside cooling unit)
- Refrigerant pressure sensor

FEATURES OF NEW TYPE REFRIGERANT CONNECTION

- The O-ring has been relocated. It has also been provided with a groove for proper installation. This reduces the possibility of the O-ring being caught in, or damaged by, the mating part. The sealing direction of the O-ring is now set vertically in relation to the contacting surface of the mating part to improve sealing characteristics.
- The reaction force of the O-ring will not occur in the direction that causes the joint to pull out, thereby facilitating piping connections.

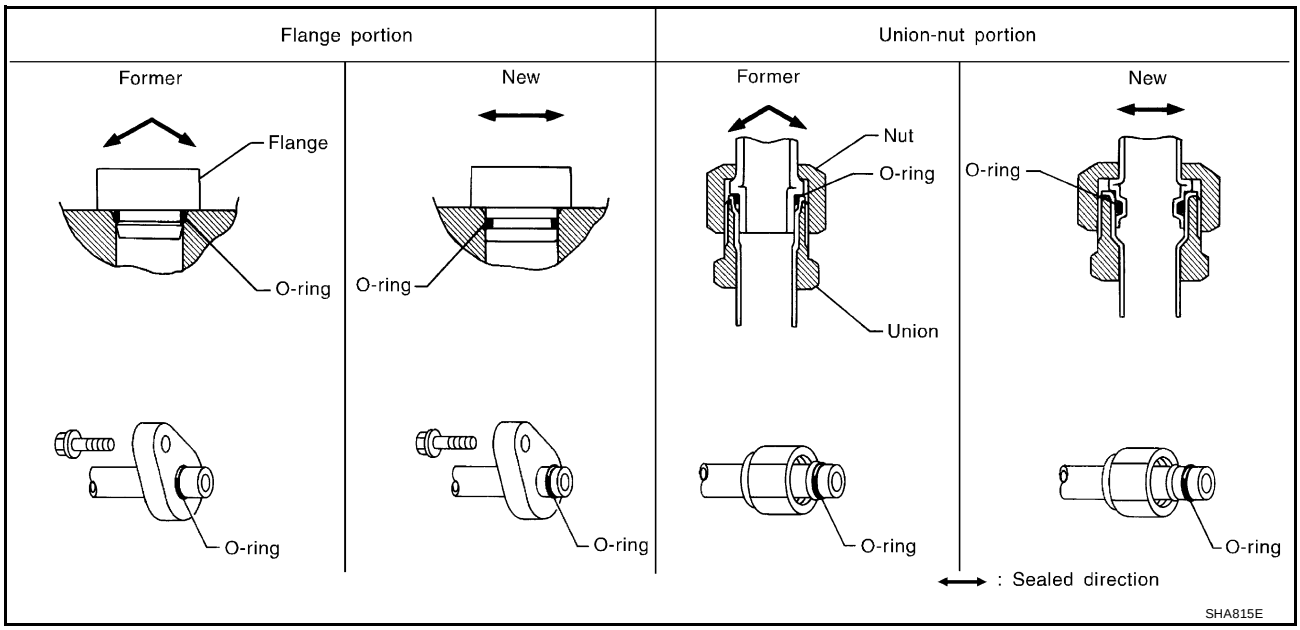

O-RING AND REFRIGERANT CONNECTION

A/C Compressor and Condenser

SEC. 214 • 271 • 274 • 276

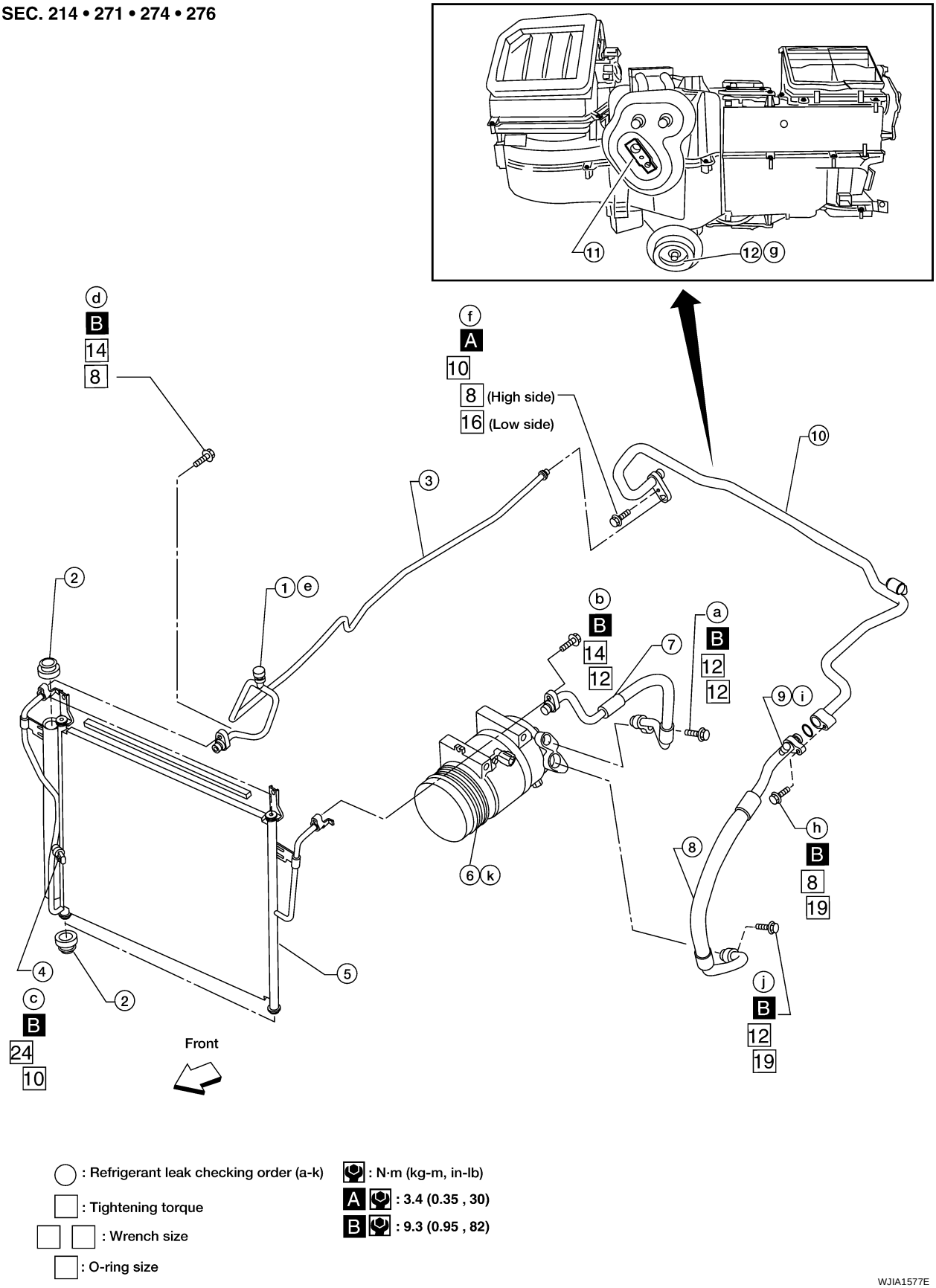

1. High-pressure service valve
2. Grommet
3. High-pressure pipe
4. Refrigerant pressure sensor
5. Condenser
6. Compressor shaft seal
7. High-pressure flexible hose
8. Low-pressure flexible hose
9. Low-pressure service valve
10. Low-pressure pipe
11. Expansion valve
12. Drain hose

CAUTION:

The new and former refrigerant connections use different O-ring configurations. Do not confuse O-rings since they are not interchangeable. If a wrong O-ring is installed, refrigerant will leak at or around the connection.

O-Ring Part Numbers and Specifications

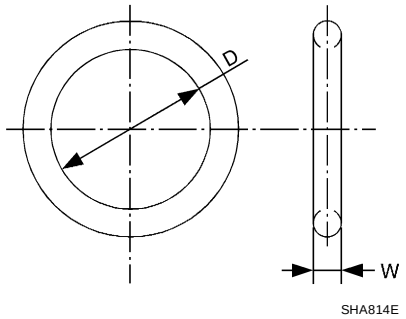

Connection type	O-ring size	Part number*	D mm (in)	W mm (in)
New	8	92471 N8210	6.8 (0.268)	1.85 (0.0728)
Former	10	J2476 89956	9.25 (0.3642)	1.78 (0.0701)
New	12	92472 N8210	10.9 (0.429)	2.43 (0.0957)
Former		92475 71L00	11.0 (0.433)	2.4 (0.094)
New	16	92473 N8210	13.6 (0.535)	2.43 (0.0957)
Former		92475 72L00	14.3 (0.563)	2.3 (0.091)
New	19	92474 N8210	16.5 (0.650)	2.43 (0.0957)
Former		92477 N8200	17.12 (0.6740)	1.78 (0.0701)
New	24	92195 AH300	21.8 (0.858)	2.4 (0.094)

*: Always check with the Parts Department for the latest parts information.

WARNING:

Make sure all refrigerant is discharged into the recycling equipment and the pressure in the system is less than atmospheric pressure. Then gradually loosen the discharge side hose fitting and remove it.

CAUTION:

When replacing or cleaning refrigerant cycle components, observe the following.

- **When the compressor is removed, store it in the same position as it is when mounted on the car. Failure to do so will cause oil to enter the low pressure chamber.**
- **When connecting tubes, always use a torque wrench and a back-up wrench.**
- **After disconnecting tubes, immediately plug all openings to prevent entry of dirt and moisture.**
- **When installing an air conditioner in the vehicle, connect the pipes as the final stage of the operation. Do not remove the seal caps of pipes and other components until just before required for connection.**
- **Allow components stored in cool areas to warm to working area temperature before removing seal caps. This prevents condensation from forming inside A/C components.**
- **Thoroughly remove moisture from the refrigeration system before charging the refrigerant.**
- **Always replace used O-rings.**
- **When connecting tube, apply oil to circle of the O-rings shown in illustration. Be careful not to apply oil to threaded portion.**
  Oil name: NISSAN A/C System Oil Type S (DH-PS)
  Part number: KLH00-PAGS0
- **O-ring must be closely attached to dented portion of tube.**
- **When replacing the O-ring, be careful not to damage O-ring and tube.**
- **Connect tube until you hear it click, then tighten the nut or bolt by hand until snug. Make sure that the O-ring is installed to tube correctly.**

- **After connecting line, conduct leak test and make sure that there is no leakage from connections. When the gas leaking point is found, disconnect that line and replace the O-ring. Then tighten connections of seal seat to the specified torque.**

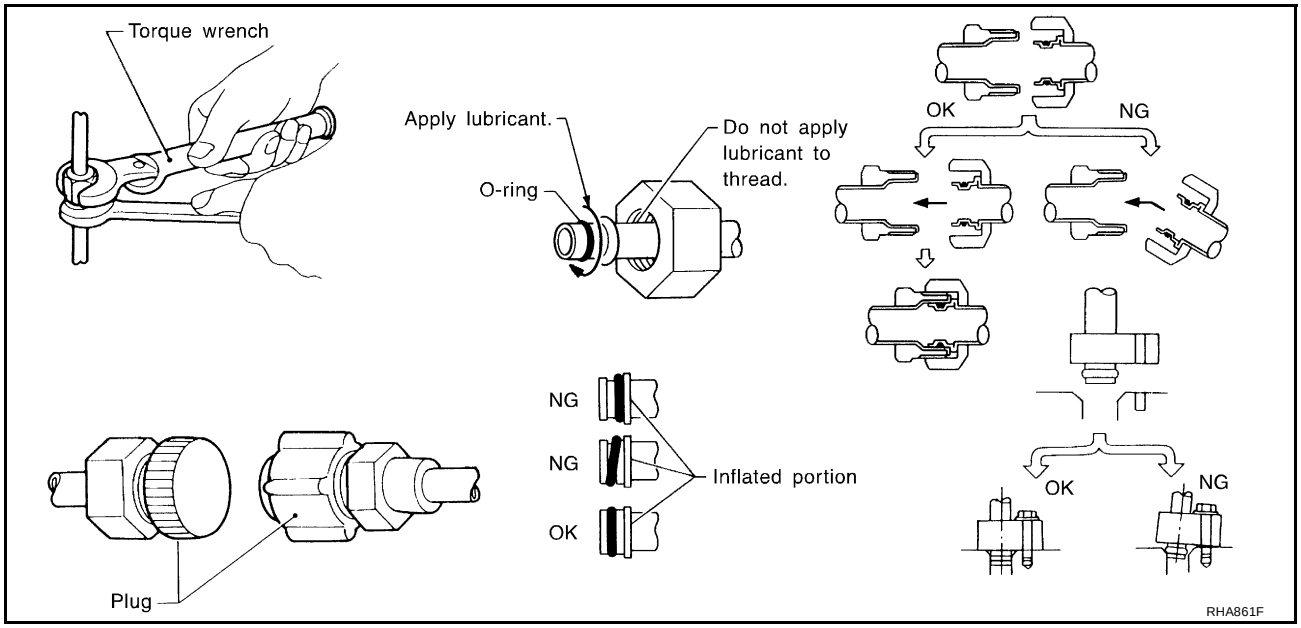

Precautions for Servicing Compressor

EJS0031T

- **Plug all openings to prevent moisture and foreign matter from entering.**
- **When the compressor is removed, store it in the same position as it is when mounted on the car.**
- **When replacing or repairing compressor, follow “Maintenance of Oil Quantity in Compressor” exactly. Refer to MTC-20, "Maintenance of Oil Quantity in Compressor" .**
- **Keep friction surfaces between clutch and pulley clean. If the surface is contaminated with oil, wipe it off by using a clean waste cloth moistened with thinner.**
- **After compressor service operation, turn the compressor shaft by hand more than 5 turns in both directions. This will equally distribute oil inside the compressor. After the compressor is installed, let the engine idle and operate the compressor for 1 hour.**
- **After replacing the compressor magnet clutch, apply voltage to the new one and check for normal operation. Refer to MTC-116, "Removal and Installation for Compressor Clutch".**

Precautions for Service Equipment

EJS0031U

RECOVERY/RECYCLING EQUIPMENT

Follow the manufacturer's instructions for machine operation and machine maintenance. Never introduce any refrigerant other than that specified into the machine.

ELECTRONIC LEAK DETECTOR

Follow the manufacturer's instructions for tester operation and tester maintenance.

VACUUM PUMP

The oil contained inside the vacuum pump is not compatible with the specified oil for HFC-134a (R-134a) A/C systems. The vent side of the vacuum pump is exposed to atmospheric pressure so the vacuum pump oil may migrate out of the pump into the service hose. This is possible when the pump is switched off after evacuation (vacuuming) and hose is connected to it.
To prevent this migration, use a manual valve situated near the hose-to-pump connection, as follows.

- Usually vacuum pumps have a manual isolator valve as part of the pump. Close this valve to isolate the service hose from the pump.
- For pumps without an isolator, use a hose equipped with a manual shut-off valve near the pump end. Close the valve to isolate the hose from the pump.
- If the hose has an automatic shut off valve, disconnect the hose from the pump: as long as the hose is connected, the valve is open and lubricating oil may migrate.

Some one-way valves open when vacuum is applied and close under a no vacuum condition. Such valves may restrict the pump's ability to pull a deep vacuum and are not recommended.

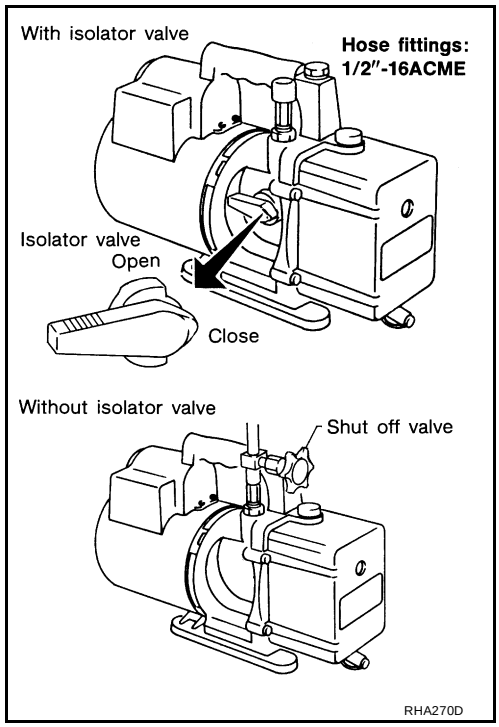

MANIFOLD GAUGE SET

Be certain that the gauge face indicates HFC-134a (R-134a or 134a). Make sure the gauge set has 1/2″-16 ACME threaded connections for service hoses. Confirm the set has been used only with refrigerant HFC-134a (R-134a) along with specified oil.

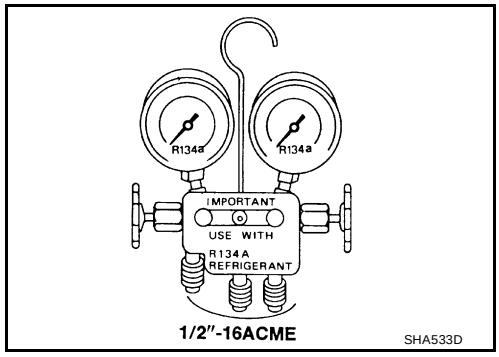

SERVICE HOSES

Be certain that the service hoses display the markings described (colored hose with black stripe). All hoses must include positive shut-off devices (either manual or automatic) near the end of the hoses opposite the manifold gauge.

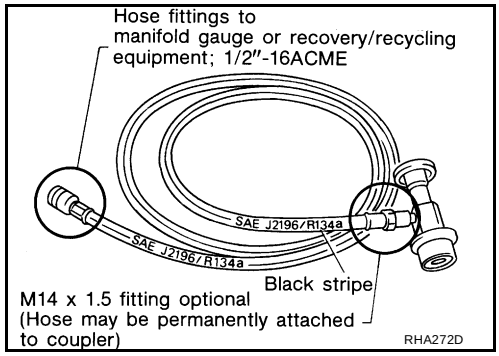

SERVICE COUPLERS

Never attempt to connect HFC-134a (R-134a) service couplers to a CFC-12 (R-12) A/C system. The HFC-134a (R-134a) couplers will not properly connect to the CFC-12 (R-12) system. If an improper connection is attempted, discharging and contamination may occur.

Shut-off valve rotation	A/C service valve
Clockwise	Open
Counterclockwise	Close

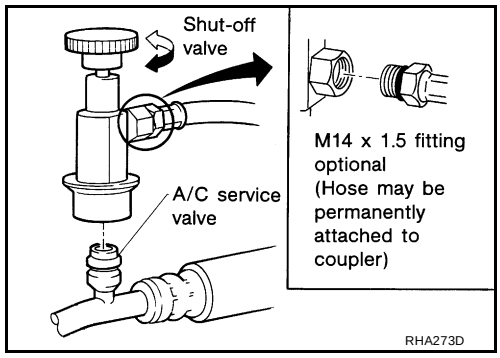

REFRIGERANT WEIGHT SCALE

Verify that no refrigerant other than HFC134a (R-134a) and specified oils have been used with the scale. If the scale controls refrigerant flow electronically, the hose fitting must be 1/2”-16 ACME.

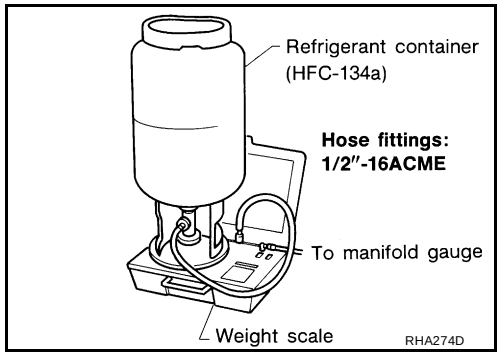

CHARGING CYLINDER

Using a charging cylinder is not recommended. Refrigerant may be vented into air from cylinder's top valve when filling the cylinder with refrigerant. Also, the accuracy of the cylinder is generally less than that of an electronic scale or of quality recycle/recharge equipment.

PREPARATION

PFP:00002

Special Service Tools

EJS003RG

The actual shapes of Kent-Moore tools may differ from those of special service tools illustrated here.

Tool number (Kent-Moore No.) Tool name		Description
— (J-38873-A) Pulley installer	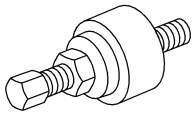 LHA171	Installing pulley
KV99233130 (J-29884) Pulley puller	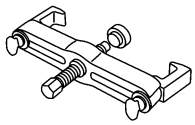 LHA172	Removing pulley

HFC-134a (R-134a) Service Tools and Equipment

EJS003RH

Never mix HFC-134a (R-134a) refrigerant and/or the specified oil with CFC-12 (R-12) refrigerant and/or the oil.
Separate and non-interchangeable service equipment must be used for handling each type of refrigerant/oil.
Refrigerant container fittings, service hose fittings and service equipment fittings (equipment which handles refrigerant and/or oil) are different between CFC-12 (R-12) and HFC-134a (R-134a). This is to avoid mixed use of the refrigerants/oil.
Adapters that convert one size fitting to another must never be used refrigerant/oil contamination will occur and compressor failure will result.

Tool number (Kent-Moore No.) Tool name		Description
HFC-134a (R-134a) (—) Refrigerant	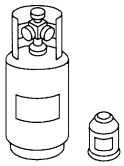 S-NT196	Container color: Light blue Container marking: HFC-134a (R-134a) Fitting size: Thread size ● large container 1/2”-16 ACME
KLH00-PAGR0 (—) NISSAN A/C System Oil Type S (DH-PS)	 S-NT197	Type: Poly alkylene glycol oil (PAG), type S (DH-PS) Application: HFC-134a (R-134a) swash plate compressors (NISSAN only) Lubricity: 40 m ℓ (1.4 US fl oz, 1.4 Imp fl oz)
KV991J0130 (ACR2005-NI) ACR5 A/C Service Center	 WJIA0293E	Refrigerant recovery and recycling and recharging

Tool number (Kent-Moore No.) Tool name		Description
— (J-41995) Electronic refrigerant leak detector	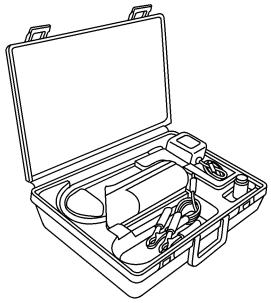 AHA281A	Power supply: ● DC 12V (battery terminal)
— (J-43926) Refrigerant dye leak detection kit Kit includes: (J-42220) UV lamp and UV safety goggles (J-41459) Refrigerant dye injector (J-41447) qty. 24 HFC-134a (R-134a) refrigerant dye (J-43872) Refrigerant dye cleaner	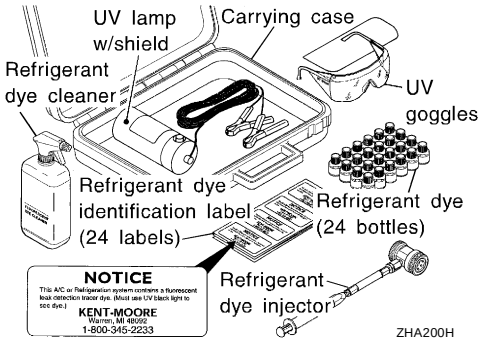 ZHA200H	Power supply: ● DC 12V (battery terminal)
— (J-42220) Fluorescent dye leak detector	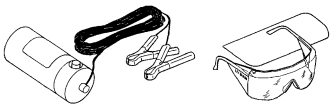 SHA438F	Power supply: ● DC 12V (battery terminal) For checking refrigerant leak when fluorescent dye is installed in A/C system. Includes: UV lamp and UV safety goggles
— (J-41447) HFC-134a (R-134a) Fluorescent leak detection dye (Box of 24, 1/4 ounce bottles)	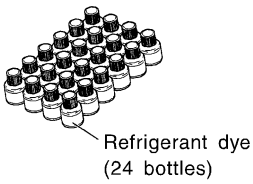 SHA439F	Application: For HFC-134a (R-134a) PAG oil Container: 1/4 ounce (7.4cc) bottle (Includes self-adhesive dye identification labels for affixing to vehicle after charging system with dye.)
— (J-41459) HFC-134a (R-134a) Dye injector Use with J-41447, 1/4 ounce bottle	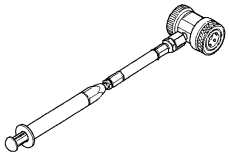 SHA440F	For injecting 1/4 ounce of fluorescent leak detection dye into A/C system.
— (J-43872) Refrigerant dye cleaner	 SHA441F	For cleaning dye spills.

Tool number (Kent-Moore No.) Tool name		Description
— (J-39183-C) Manifold gauge set (with hoses and couplers)	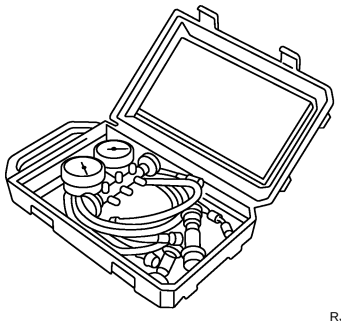 RJIA0196E	Identification: ● The gauge face indicates R-134a. Fitting size-Thread size ● 1/2”-16 ACME
Service hoses: ● High side hose (J-39500-72B) ● Low side hose (J-39500-72R) ● Utility hose (J-39500-72Y)	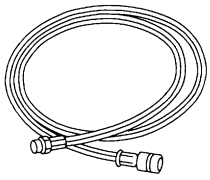 S-NT201	Hose color: ● Low side hose: Blue with black stripe ● High side hose: Red with black stripe ● Utility hose: Yellow with black stripe or green with black stripe Hose fitting to gauge: ● 1/2”-16 ACME
Service couplers ● High side coupler (J-39500-20A) ● Low side coupler (J-39500-24A)	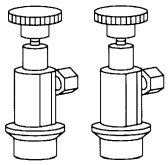 S-NT202	Hose fitting to service hose: ● M14 x 1.5 fitting is optional or permanently attached.
— (J-39699) Refrigerant weight scale	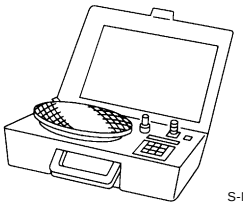 S-NT200	For measuring of refrigerant Fitting size-Thread size ● 1/2”-16 ACME
— (J-39649) Vacuum pump (Including the isolator valve)	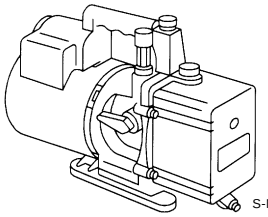 S-NT203	Capacity: ● Air displacement: 4 CFM ● Micron rating: 20 microns ● Oil capacity: 482 g (17 oz) Fitting size-Thread size ● 1/2”-16 ACME

Commercial Service Tools

EJS003RI

Tool name		Description
(J-41810-NI) Refrigerant identifier equipment (R-134a)	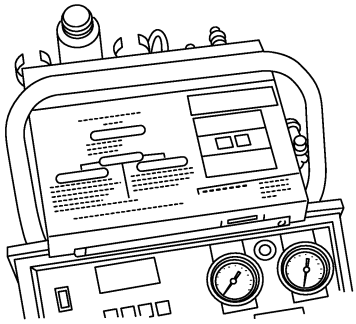 RJIA0197E	For checking refrigerant purity and system contamination
Power tool	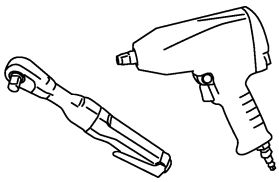 PBIC0190E	Loosening bolts and nuts
(J-44614) Clutch disc holding tool	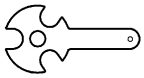 WHA230	Clutch disc holding tool

REFRIGERATION SYSTEM

PFP:KA990

Refrigerant Cycle

EJS0031Z

REFRIGERANT FLOW

The refrigerant flows in the standard pattern, that is, through the compressor, the condenser with liquid tank, through the evaporator, and back to the compressor. The refrigerant evaporation through the evaporator coils is controlled by externally equalized expansion valve, located inside the evaporator case.

Refrigerant System Protection

EJS00320

REFRIGERANT PRESSURE SENSOR

The refrigerant system is protected against excessively high or low pressures by the refrigerant pressure sensor, located on the condenser. If the system pressure rises above or falls below the specifications, the refrigerant pressure sensor detects the pressure inside the refrigerant line and sends a voltage signal to the ECM. The ECM de-energizes the A/C relay to disengage the magnetic compressor clutch when pressure on the high pressure side detected by refrigerant pressure sensor is over about 2,746 kPa (28 kg/cm^2 , 398 psi), or below about 120 kPa (1.22 kg/cm^2 , 17.4 psi).

PRESSURE RELIEF VALVE

The refrigerant system is also protected by a pressure relief valve, located in the rear head of the compressor. When the pressure of refrigerant in the system increases to an abnormal level [more than 2,990 kPa (30.5 kg/cm^2 , 433.6 psi)], the release port on the pressure relief valve automatically opens and releases refrigerant into the atmosphere.

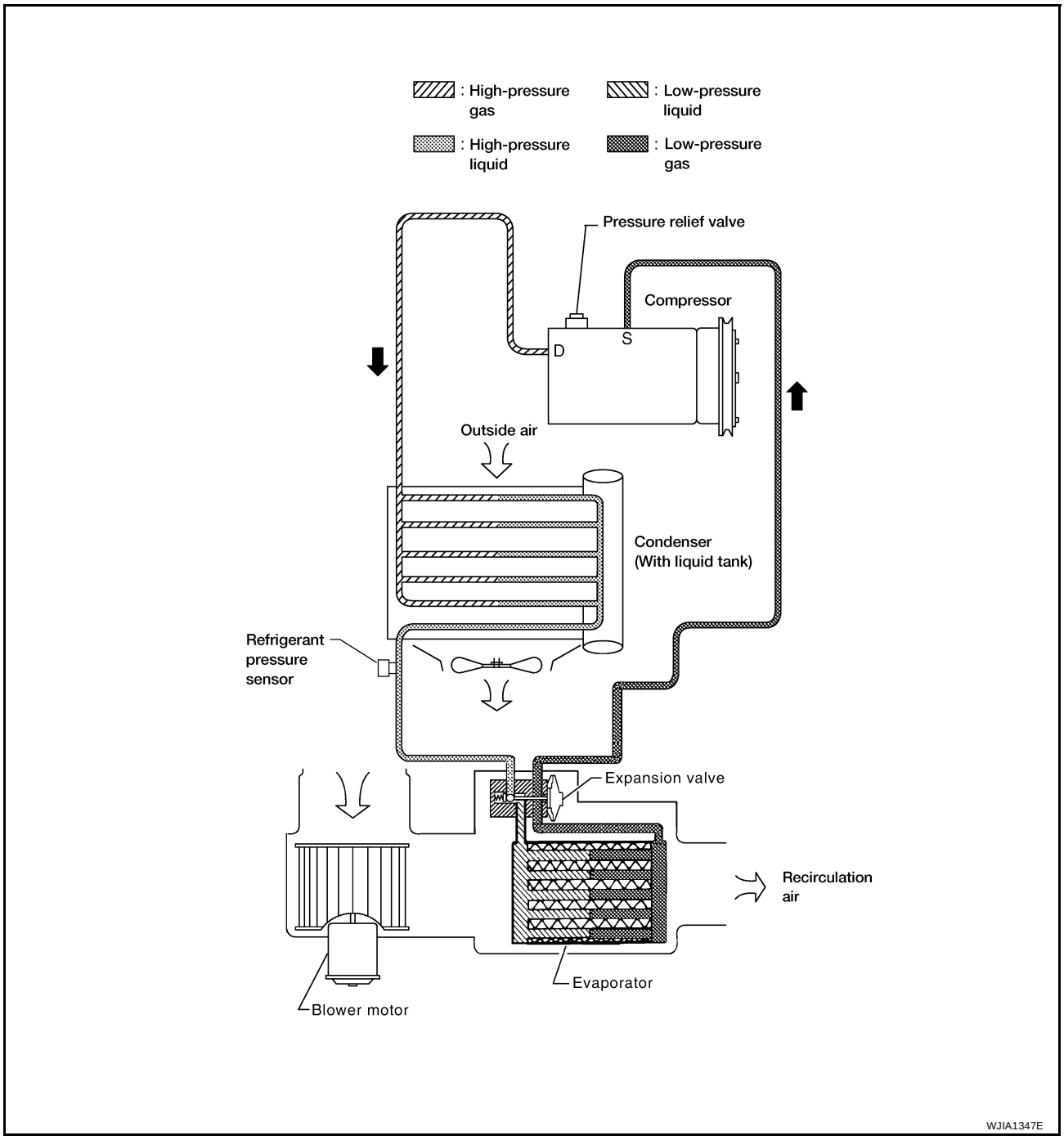

Component Layout
REFRIGERATION SYSTEM

EJS00321

SEC. 270 • 271

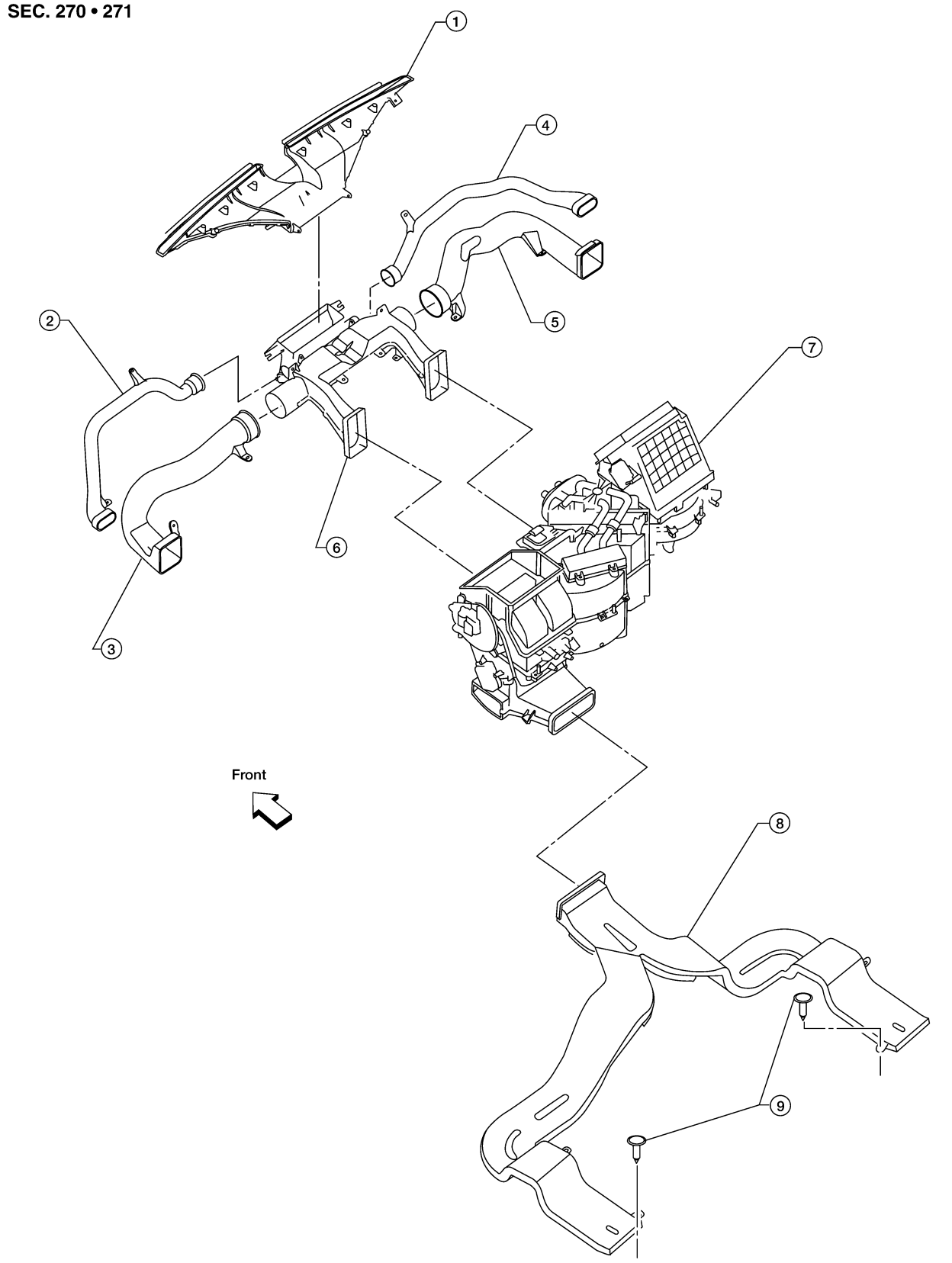

1. Defroster nozzle
2. LH side demister duct
3. LH ventilator duct
4. RH side demister duct
5. RH ventilator duct
6. Center ventilator duct
7. Heater and cooling unit assembly
8. Floor duct
9. Clips

OIL

PFP:KLG00

Maintenance of Oil Quantity in Compressor

EJS004W9

The oil in the compressor circulates through the system with the refrigerant. Add oil to compressor when replacing any component or after a large refrigerant leakage has occurred. It is important to maintain the specified amount.
If oil quantity is not maintained properly, the following malfunctions may result:

- Lack of oil: May lead to a seized compressor
- Excessive oil: Inadequate cooling (thermal exchange interference)

OIL

Name: NISSAN A/C System Oil Type S (DH-PS) or equivalent
Part number: KLH00-PAGS0

CHECKING AND ADJUSTING

CAUTION:
If excessive oil leakage is noted, do not perform the oil return operation.
Start the engine and set the following conditions:

Test Condition

- **Engine speed: Idling to 1,200 rpm**
- **A/C switch: On**
- **Blower fan speed: MAX position**
- **Temp. control: Optional [Set so that intake air temperature is 25° to 30° C (77° to 86°F)]**
- **Intake position: Recirculation ( )**
- **Perform oil return operation for about ten minutes**

Adjust the oil quantity according to the following table.

Oil Adjusting Procedure for Components Replacement Except Compressor

After replacing any of the following major components, add the correct amount of oil to the system.

Amount of Oil to be Added

Part replaced	Oil to be added to system	Remarks
	Amount of oil m ℓ (US fl oz, Imp fl oz)	
Evaporator	75 (2.5, 2.6)	—
Condenser	75 (2.5, 2.6)	—
Liquid tank	5 (0.2, 0.2)	Add if compressor is not replaced.
In case of refrigerant leak	30 (1.0, 1.1)	Large leak
	—	Small leak *1

- *1: If refrigerant leak is small, no addition of oil is needed.

Oil Adjustment Procedure for Compressor Replacement

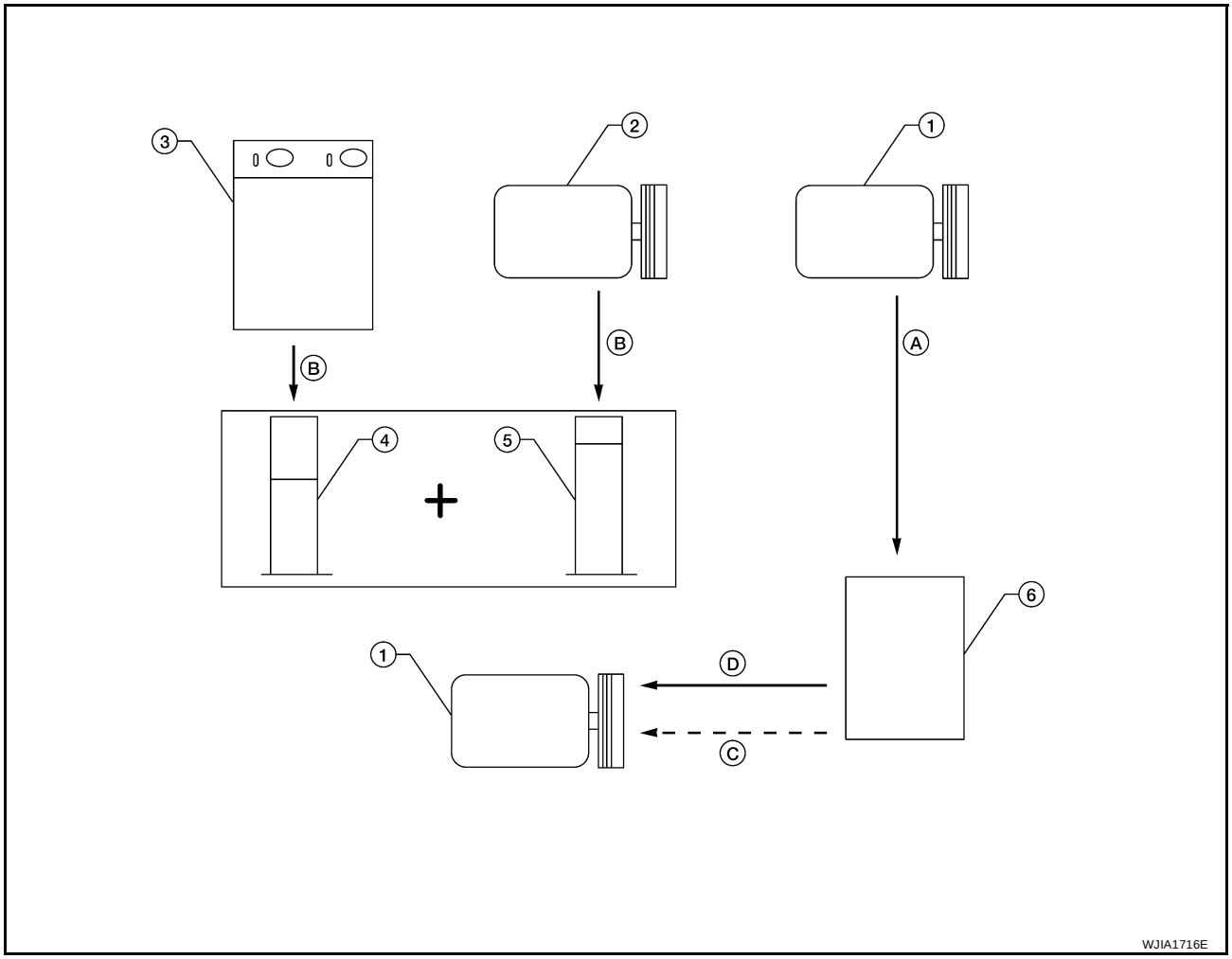

1.	New compressor	2.	Old compressor	3.	Recovery/recycling equipment
4.	Measuring cup X	5.	Measuring cup Y	6.	New oil
A.	Drain oil from the new compressor into clean container	B.	Record amount of oil recovered	C.	Add an additional 5 m ℓ (0.2 US fl oz, 0.2 Imp fl oz) of new oil when replacing liquid tank
D.	Install new oil equal to recorded amounts in measuring cups X plus Y				

1. Before connecting recovery/recycling equipment to vehicle, check recovery/recycling equipment gauges. No refrigerant pressure should be displayed. If NG, recover refrigerant from equipment lines.
2. Connect recovery/recycling equipment to vehicle. Confirm refrigerant purity in supply tank using recovery/recycling equipment and refrigerant identifier. If NG, refer to MTC-4, "Contaminated Refrigerant" .
3. Confirm refrigerant purity in vehicle A/C system using recovery/recycling equipment and refrigerant identifier. If NG, refer to MTC-4, "Contaminated Refrigerant" .
4. Discharge refrigerant into the refrigerant recovery/recycling equipment. Measure oil discharged into the recovery/recycling equipment.
5. Drain the oil from the “old” (removed) compressor into a graduated container and recover the amount of oil drained.
6. Drain the oil from the “new” compressor into a separate, clean container.
7. Measure an amount of new oil installed equal to amount drained from “old” compressor. Add this oil to “new” compressor through the suction port opening.
8. Measure an amount of new oil equal to the amount recovered during discharging. Add this oil to “new” compressor through the suction port opening.
9. If the liquid tank also needs to be replaced, add an additional 5 m ℓ (0.2 US fl oz, 0.2 Imp fl oz) of oil at this time.

CAUTION:
Do not add this 5 mℓ (0.2 US fl oz, 0.2 Imp fl oz) of oil if only replacing the compressor.

AIR CONDITIONER CONTROL

PFP:27500

Description

EJS003TN

The front air control provides regulation of the vehicle's interior temperature. The system is based on the position of the front air controls temperature switch selected by the driver. This is done by utilizing a microcomputer, also referred to as the front air control, which receives input signals from the following two sensors:

- Intake sensor
- PBR (position balanced resistor).

The front air control uses these signals (including the set position of the temperature switch) to control:

- Outlet air volume
- Air temperature
- Air distribution

Operation

EJS003TO

AIR MIX DOOR CONTROL

The air mix door is controlled so that in-vehicle temperature changed based on the position of the temperature control dial.

BLOWER SPEED CONTROL

Blower speed is controlled based on front blower switch settings.
When blower switch is turned, the blower motor starts and increases air flow volume each time the blower switch is turned clockwise, and decreases air flow volume each time the blower switch is turned counterclockwise.

INTAKE DOORS CONTROL

The intake doors are controlled by the recirculation switch setting, and the mode (recirculation is not allowed in floor, floor/defrost or defrost modes) control dial setting.

MODE DOOR CONTROL

The mode door is controlled by the position of the mode control dial.

DEFROSTER DOOR CONTROL

The defroster door is controlled by turning the defroster dial to front defroster.

MAGNET CLUTCH CONTROL

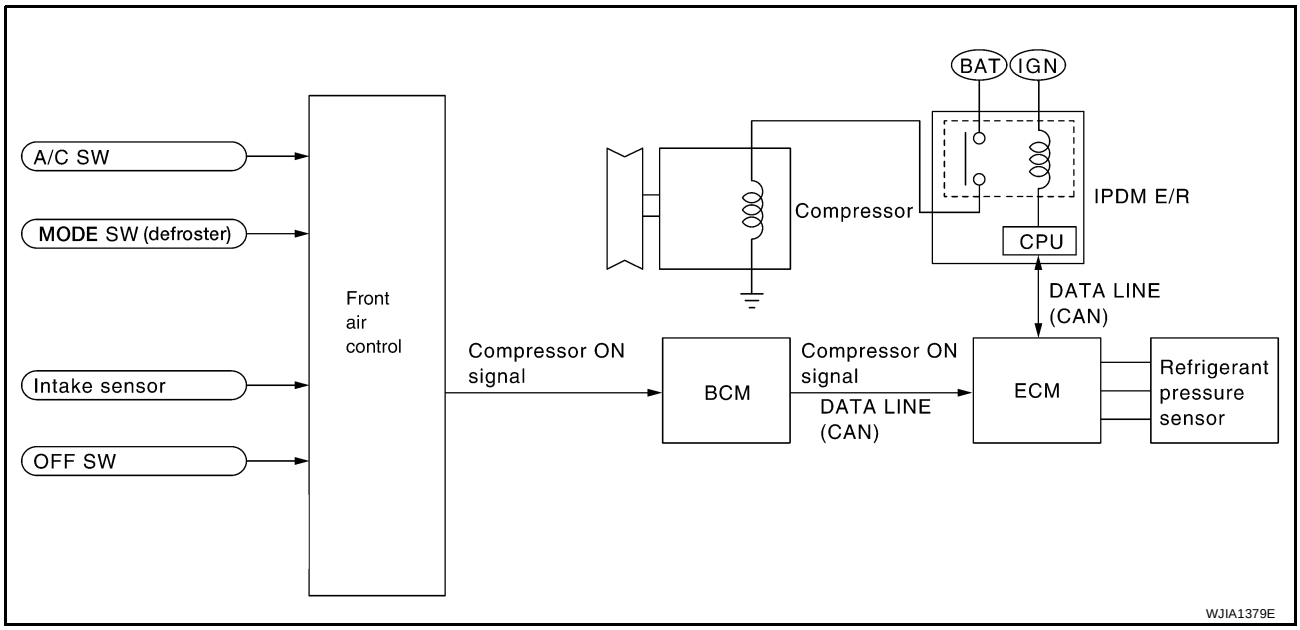

When A/C switch or DEF switch is pressed, front air control inputs compressor ON signal to BCM.
BCM sends compressor ON signal to ECM, via CAN communication line.

ECM judges whether compressor can be turned ON, based on each sensor status (refrigerant pressure sensor signal, throttle angle sensor, etc.). If it judges compressor can be turned ON, it sends compressor ON signal to IPDM E/R, via CAN communication line.
Upon receipt of compressor ON signal from ECM, IPDM E/R turns air conditioner relay ON to operate compressor.

Description of Control System

EJS003TP

The control system consists of input sensors, switches, the front air control (microcomputer) and outputs. The relationship of these components is shown in the figure below:

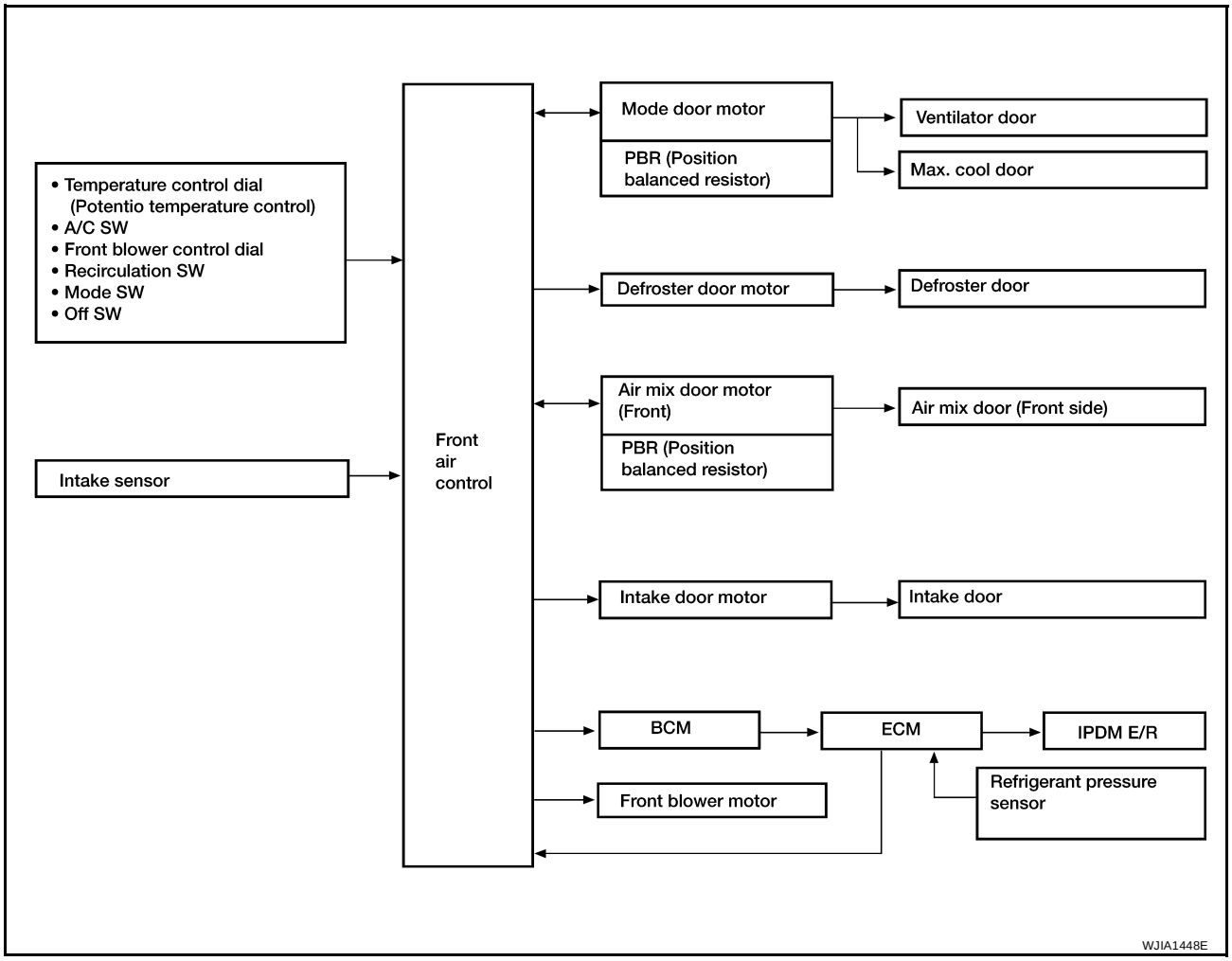

Control Operation

EJS003TQ

Front air control

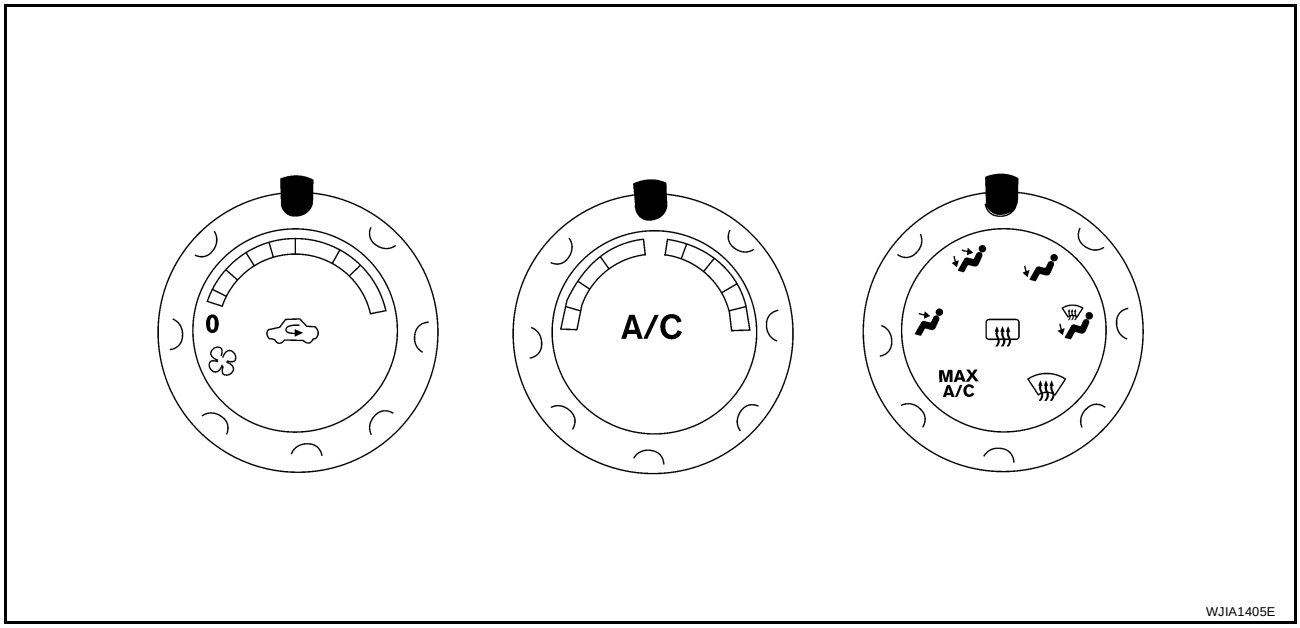

TEMPERATURE CONTROL DIAL (TEMPERATURE CONTROL)

Increases or decreases the set temperature.

RECIRCULATION () SWITCH

- When REC switch is ON, REC switch indicator turns ON, and air inlet is set to REC.
- When REC switch is turned OFF, or when compressor is turned from ON to OFF, REC switch is automatically turned OFF. REC mode can be re-entered by pressing REC switch again.
- REC switch is not operated when DEF switch is turned ON, at the D/F position or in floor mode.

REAR WINDOW DEFOGGER SWITCH (CREW CAB)

When switch is ON, rear window and door mirrors are defogged.

OFF SWITCH (BLOWER SPEED SET TO 0)

The compressor and blower are OFF, the intake doors are set to the outside air position, and the air outlet doors are set to the foot position.

A/C SWITCH

The compressor is ON or OFF.

MODE CONTROL DIAL

Controls the air discharge outlets through control of the mode and defroster doors.

FRONT BLOWER CONTROL DIAL

Manually control the blower speed. Fourteen speeds are available for manual control.

Discharge Air Flow

EJS003TR

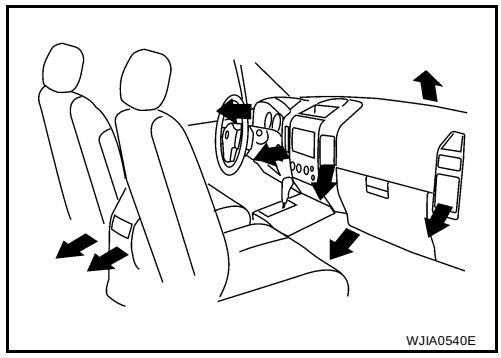

Discharge air flow

Mode door position	Air outlet/distribution		
	Vent	Foot	Defroster
	100%	–	–
	50%	50%	–
	–	(100%)	–
	–	60%	40%
	–	–	100%

WJIA1297E

System Description

EJS003TS

SWITCHES AND THEIR CONTROL FUNCTION

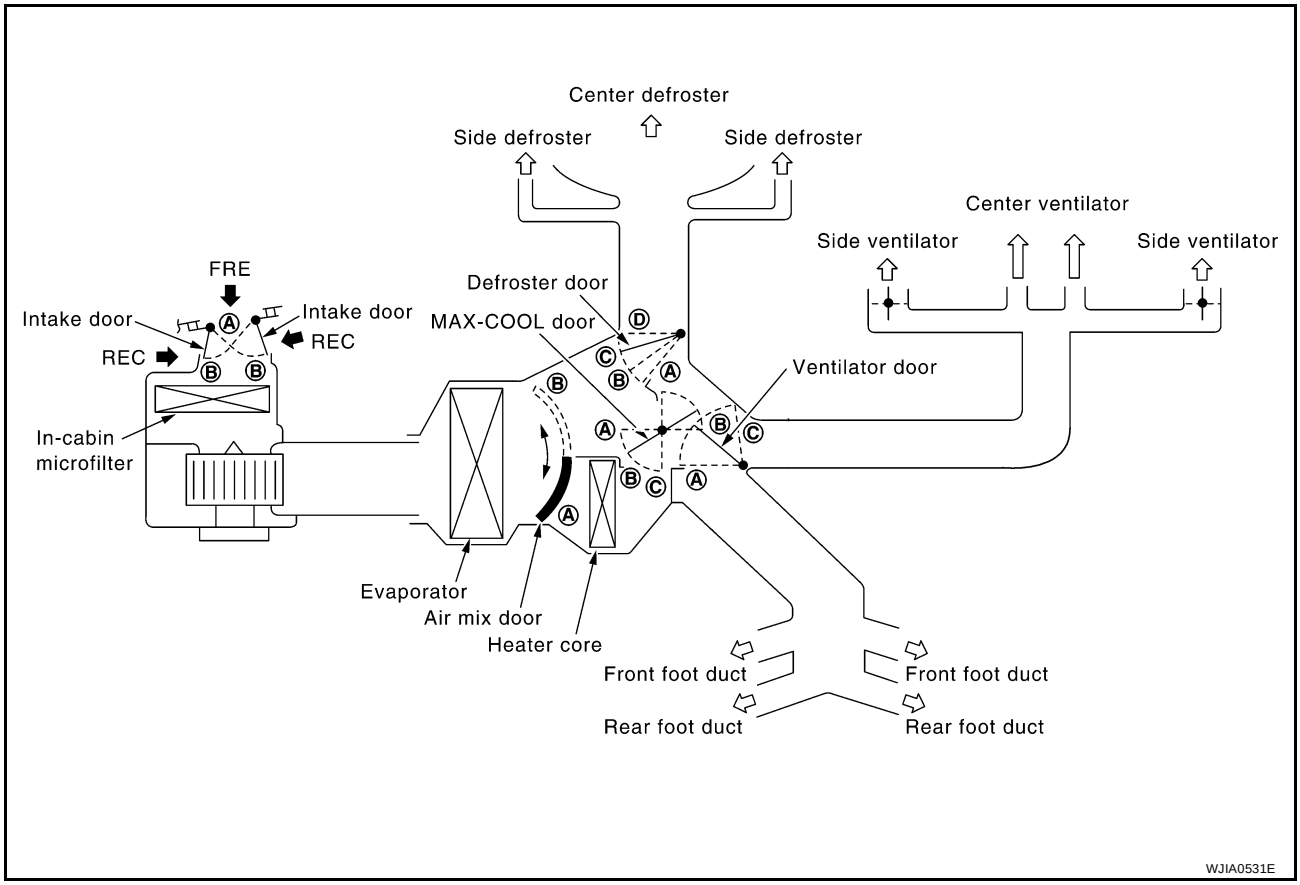

Position or switch / Door	MODE SW				DEF SW		REC SW		Temperature switch			OFF SW
	VENT	B/L	FOOT	D/F	ON	OFF	ON	OFF	COLD	~	HOT	
					FRONT							
Ventilator door	Ⓐ	Ⓑ	Ⓒ	Ⓒ	Ⓒ	—	—		—			Ⓒ
MAX-COOL door	Ⓐ	Ⓑ	Ⓑ	Ⓑ	Ⓒ		—		—			Ⓑ
Defroster door	Ⓓ	Ⓓ	Ⓓ or Ⓒ	Ⓑ	Ⓐ		—		—			Ⓒ
Intake door	—				Ⓑ		Ⓐ	Ⓑ	—			Ⓑ
Air mix door	—				—		—		Ⓐ		Ⓑ	—

WJIA1406E

CAN Communication System Description

EJS003TU

Refer to LAN-25, "CAN COMMUNICATION" .

TROUBLE DIAGNOSIS

PFP:00004

CONSULT-II Function (HVAC)

EJS003TV

CONSULT-II can display each diagnostic item using the diagnostic test modes shown following.

Diagnostic mode	Description
SELF-DIAG RESULTS	Displays front air control self-diagnosis results.
DATA MONITOR	Displays front air control input/output data in real time.
CAN DIAG SUPPORT MNTR	The result of transmit/receive diagnosis of CAN communication can be read.
ECU PART NUMBER	Front air control part number can be read.

CONSULT-II BASIC OPERATION

CAUTION:

If CONSULT-II is used with no connection of CONSULT-II CONVERTER, malfunctions might be detected in self-diagnosis depending on control unit which carries out CAN communication.

1. With the ignition switch OFF, connect CONSULT-II and CONSULT-II CONVERTER to the data link connector, and turn the ignition switch ON.

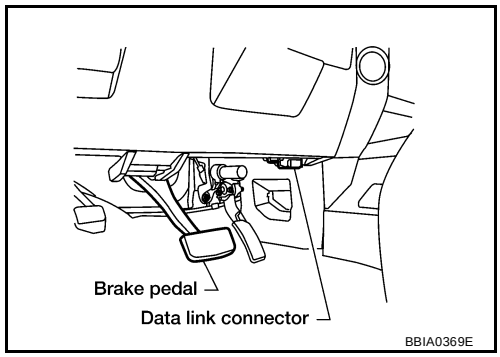

2. Touch “START (NISSAN BASED VHCL)”.

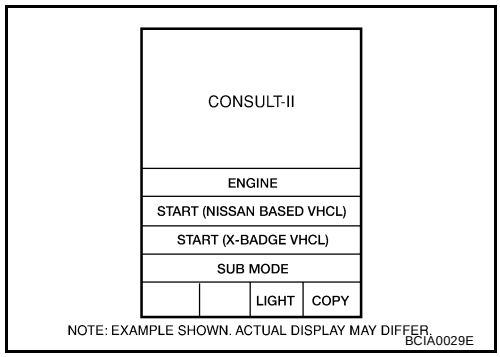

3. Touch “HVAC” on “SELECT SYSTEM” screen. If “HVAC” is not indicated, go to GI-39, "CONSULT-II Data Link Connector (DLC) Circuit" .

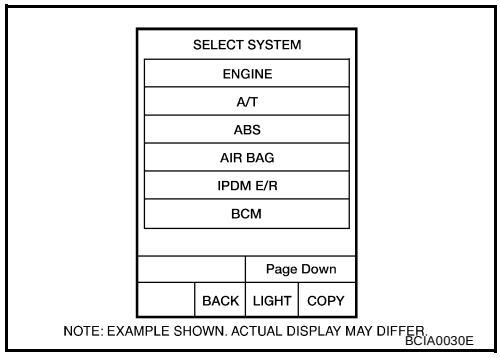

SELF-DIAGNOSIS

Operation Procedure

1. Touch “SELF-DIAG RESULTS” on “SELECT DIAG MODE” screen to view all set DTC's.

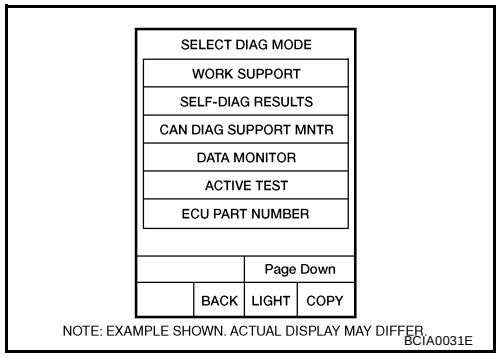

Display Item List

DTC	Description	Reference page
B2573	Battery voltage out of range	SC-4, "BATTERY"
B2581	Intake sensor circuit short	MTC-61, "Intake Door Motor Circuit"
B2582	Intake sensor circuit open	
U1000	CAN bus fault	LAN-25, "CAN COMMUNICATION"
B2587	Stuck button	MTC-95, "CONTROL UNIT"

DATA MONITOR

Operation Procedure

1. Touch “DATA MONITOR” on “SELECT DIAG MODE” screen.

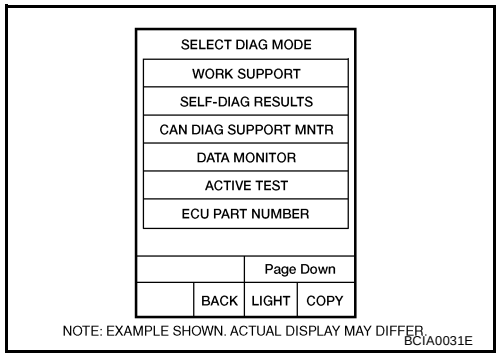

2. Touch either “MAIN SIGNALS” or “SELECTION FROM MENU” on “DATA MONITOR” screen.

MAIN SIGNALS	Monitors all the items.
SELECTION FROM MENU	Selects and monitors the individual item selected.

3. When “SELECTION FROM MENU” is selected, touch items to be monitored. When “MAIN SIGNALS” is selected, all the items will be monitored.
4. Touch “START”.
5. Touch “RECORD” while monitoring, then the status of the monitored item can be recorded. To stop recording, touch “STOP”.

Display Item List

Monitor item	Value	Contents
BATT VIA CAN	"V"	Displays battery voltage signal.
IGN VIA CAN	"ON/OFF"	Displays ignition switch signal.
EVAP TEMP SEN	"°C/°F"	Displays intake sensor signal.

Monitor item	Value	Contents
RR TEMPSET FR	"V"	Displays air mix door (front) set point signal.
MODE FDBCK	"V"	Displays mode door motor feedback signal.
DVR MIX FDBCK	"V"	Displays air mix door motor (front) feedback signal.
DEF FDBCK	"V"	Displays defroster door motor feedback signal.
RECIRC	"ON/OFF"	Displays recirculation switch signal.
A/C	"ON/OFF"	Displays A/C switch signal.
RR DEFOG	"ON/OFF"	Displays rear defroster request signal.
MODE SELECT	" [PNL]" " [MIX]" " [FLR]" " [DEFR]" " [MAX]" " [DENT]"	Displays mode door motor position.

*: DENT is displayed when MODE switch is between selections.

CONSULT-II Function (BCM)

EJS003TW

CONSULT-II can display each diagnostic item using the diagnostic test modes shown following.

BCM diagnostic test item	Diagnostic mode	Description
Inspection by part	WORK SUPPORT	Supports inspections and adjustments. Commands are transmitted to the BCM for setting the status suitable for required operation, input/output signals are received from the BCM and received data is displayed.
	DATA MONITOR	Displays BCM input/output data in real time.
	ACTIVE TEST	Operation of electrical loads can be checked by sending drive signal to them.
	SELF-DIAG RESULTS	Displays BCM self-diagnosis results.
	CAN DIAG SUPPORT MNTR	The result of transmit/receive diagnosis of CAN communication can be read.
	ECU PART NUMBER	BCM part number can be read.
	CONFIGURATION	Performs BCM configuration read/write functions.

CONSULT-II BASIC OPERATION

CAUTION:

If CONSULT-II is used with no connection of CONSULT-II CONVERTER, malfunctions might be detected in self-diagnosis depending on control unit which carries out CAN communication.

1. With the ignition switch OFF, connect CONSULT-II and CONSULT-II CONVERTER to the data link connector, and turn the ignition switch ON.

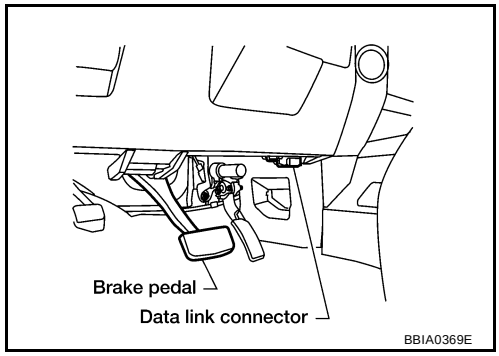

2. Touch “START (NISSAN BASED VHCL)”.

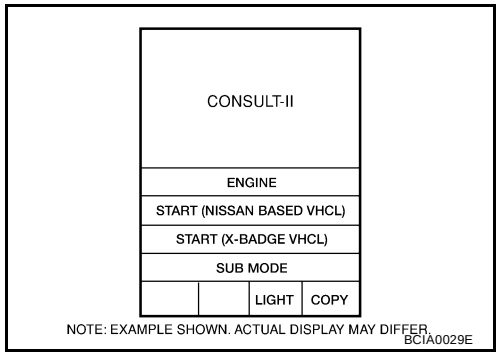

3. Touch “BCM” on “SELECT SYSTEM” screen. If “BCM” is not indicated, go to GI-39, "CONSULT-II Data Link Connector (DLC) Circuit" .

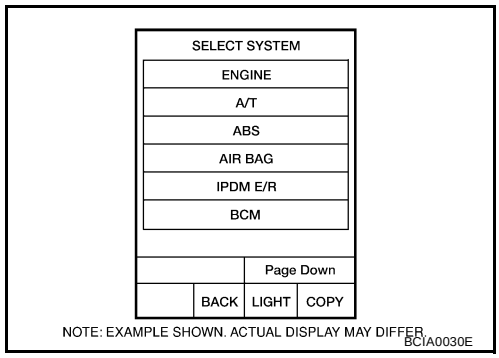

DATA MONITOR

Operation Procedure

1. Touch “AIR CONDITIONER" on "SELECT TEST ITEM" screen.

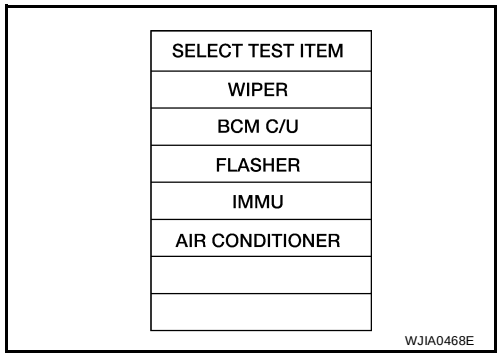

2. Touch “DATA MONITOR” on “SELECT DIAG MODE” screen.

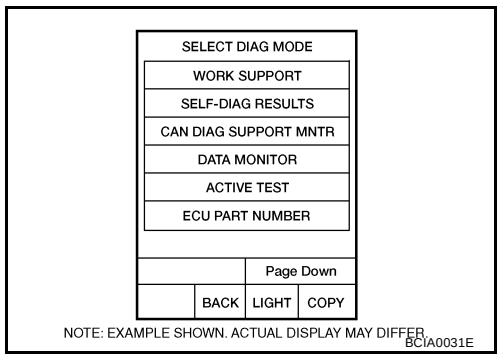

3. Touch either "ALL SIGNALS" or "SELECTION FROM MENU" on "DATA MONITOR" screen.

ALL SIGNALS	Monitors all the items.
SELECTION FROM MENU	Selects and monitors the individual item selected.

4. When "SELECTION FROM MENU" is selected, touch items to be monitored. When "ALL SIGNALS" is selected, all the items will be monitored.
5. Touch "START".
6. Touch "RECORD" while monitoring, then the status of the monitored item can be recorded. To stop recording, touch "STOP".

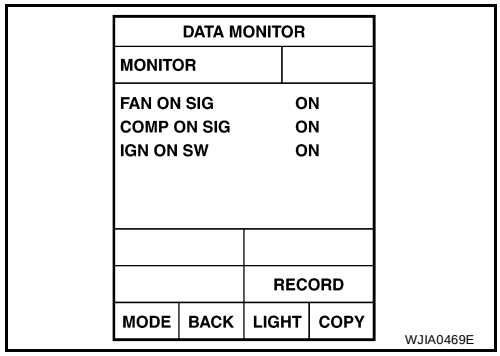

Display Item List

Monitor item name “operation or unit”		Contents
IGN ON SW	“ON/OFF”	Displays “IGN Position (ON)/(OFF), ACC Position (OFF)” status as judged from ignition switch signal.
COMP ON SIG	“ON/OFF”	Displays “COMP (ON)/COMP (OFF)” status as judged from air conditioner switch signal.
FAN ON SIG	“ON/OFF”	Displays “FAN (ON)/FAN (OFF)” status as judged from blower motor switch signal.

How to Perform Trouble Diagnosis for Quick and Accurate Repair

EJS003TX

WORK FLOW

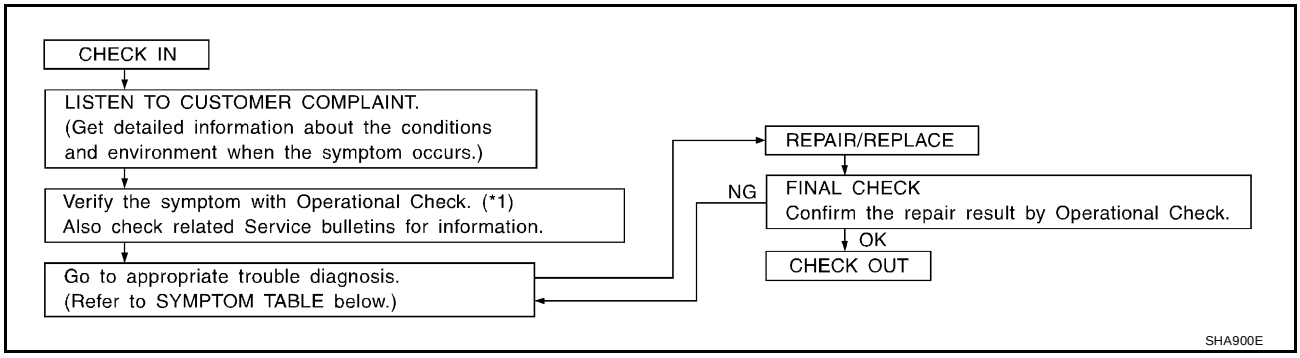

*1 MTC-46, "Operational Check".

SYMPTOM TABLE

Symptom	Reference Page	
A/C system does not come on.	Go to Trouble Diagnosis Procedure for A/C System.	MTC-48
A/C system cannot be controlled.	Go to Self-diagnosis Function.	MTC-30
Air outlet does not change.	Go to Trouble Diagnosis Procedure for Mode Door Motor.	MTC-51
Mode door motor is malfunctioning.		
Discharge air temperature does not change.	Go to Trouble Diagnosis Procedure for Air Mix Door Motor (Front).	MTC-56
Air mix door motor (front) is malfunctioning.		
Intake door does not change.	Go to Trouble Diagnosis Procedure for Intake Door Motor.	MTC-61
Intake door motor is malfunctioning.		
Defroster door motor is malfunctioning.	Go to Trouble Diagnosis Procedure for Defroster Door Motor.	MTC-65
Front blower motor operation is malfunctioning.	Go to Trouble Diagnosis Procedure for Front Blower Motor.	MTC-70
Magnet clutch does not engage.	Go to Trouble Diagnosis Procedure for Magnet Clutch.	MTC-77
Insufficient cooling	Go to Trouble Diagnosis Procedure for Insufficient Cooling.	MTC-82
Insufficient heating	Go to Trouble Diagnosis Procedure for Insufficient Heating.	MTC-89
Noise	Go to Trouble Diagnosis Procedure for Noise.	MTC-90

Component Parts and Harness Connector Location

EJS003TY

ENGINE COMPARTMENT

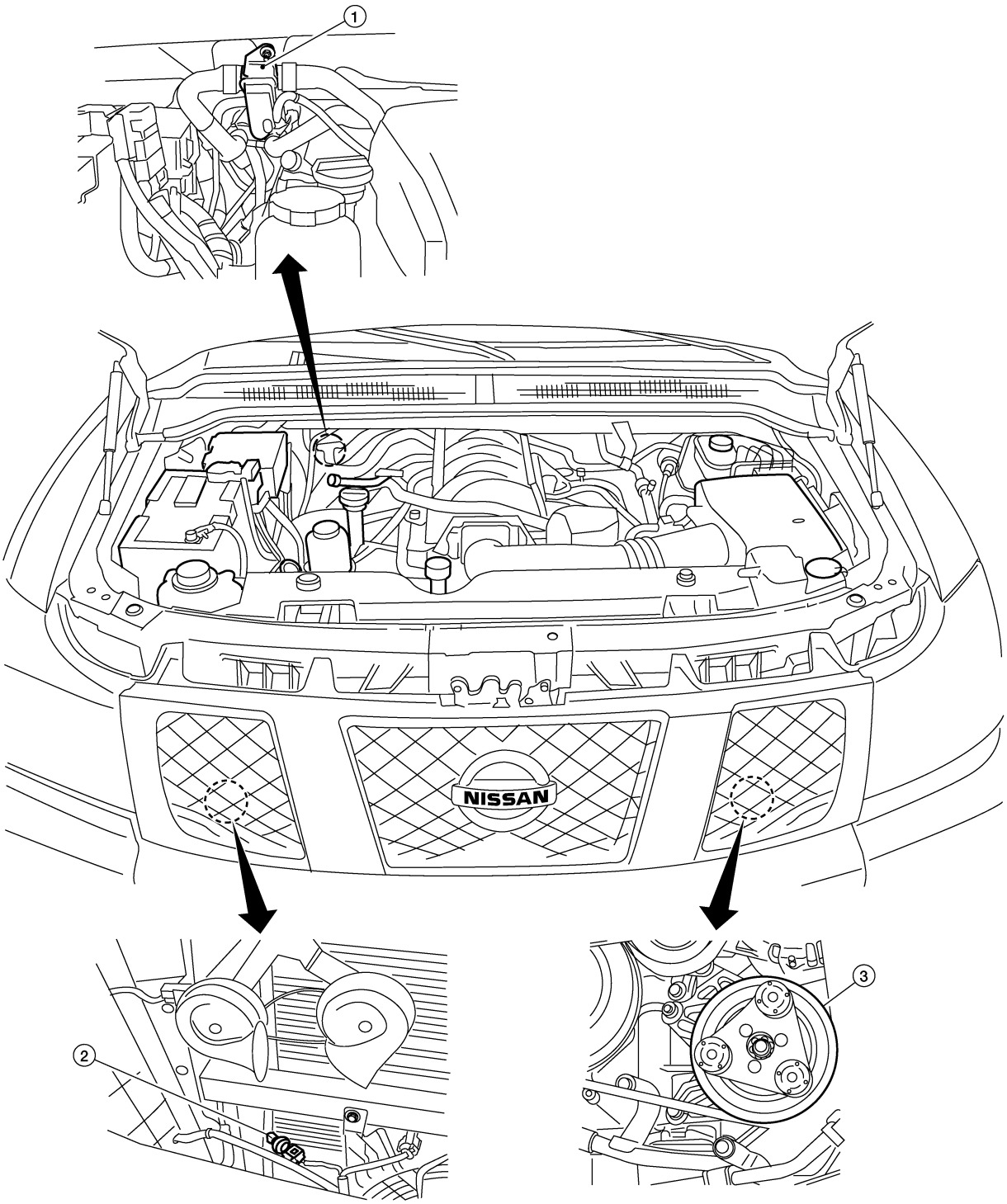

WJIA1924E

1. Water valve F68
2. Refrigerant pressure sensor E48 (view with grille removed.)
3. A/C compressor F3

PASSENGER COMPARTMENT

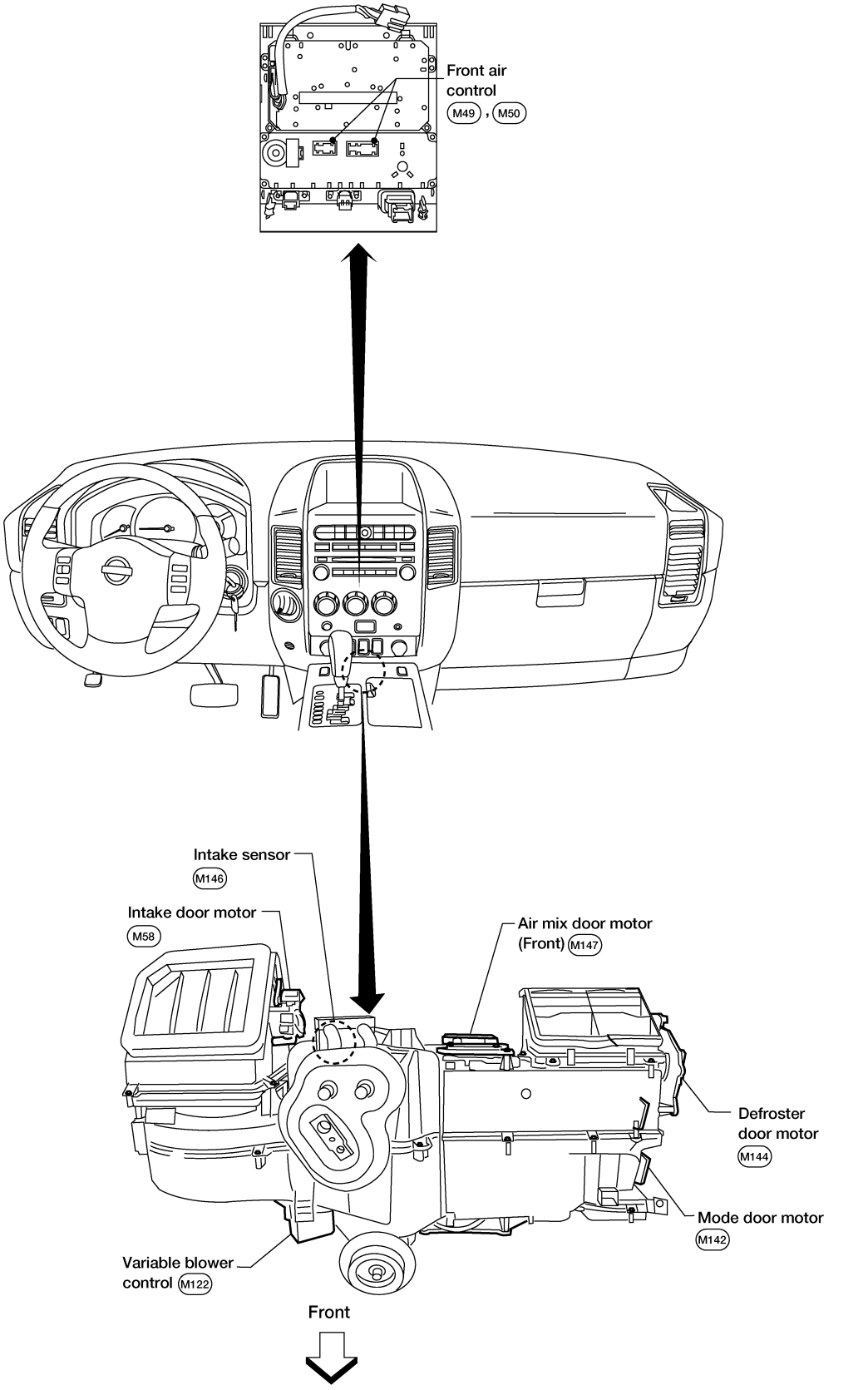

WJIA1925E

Schematic

EJS003TZ

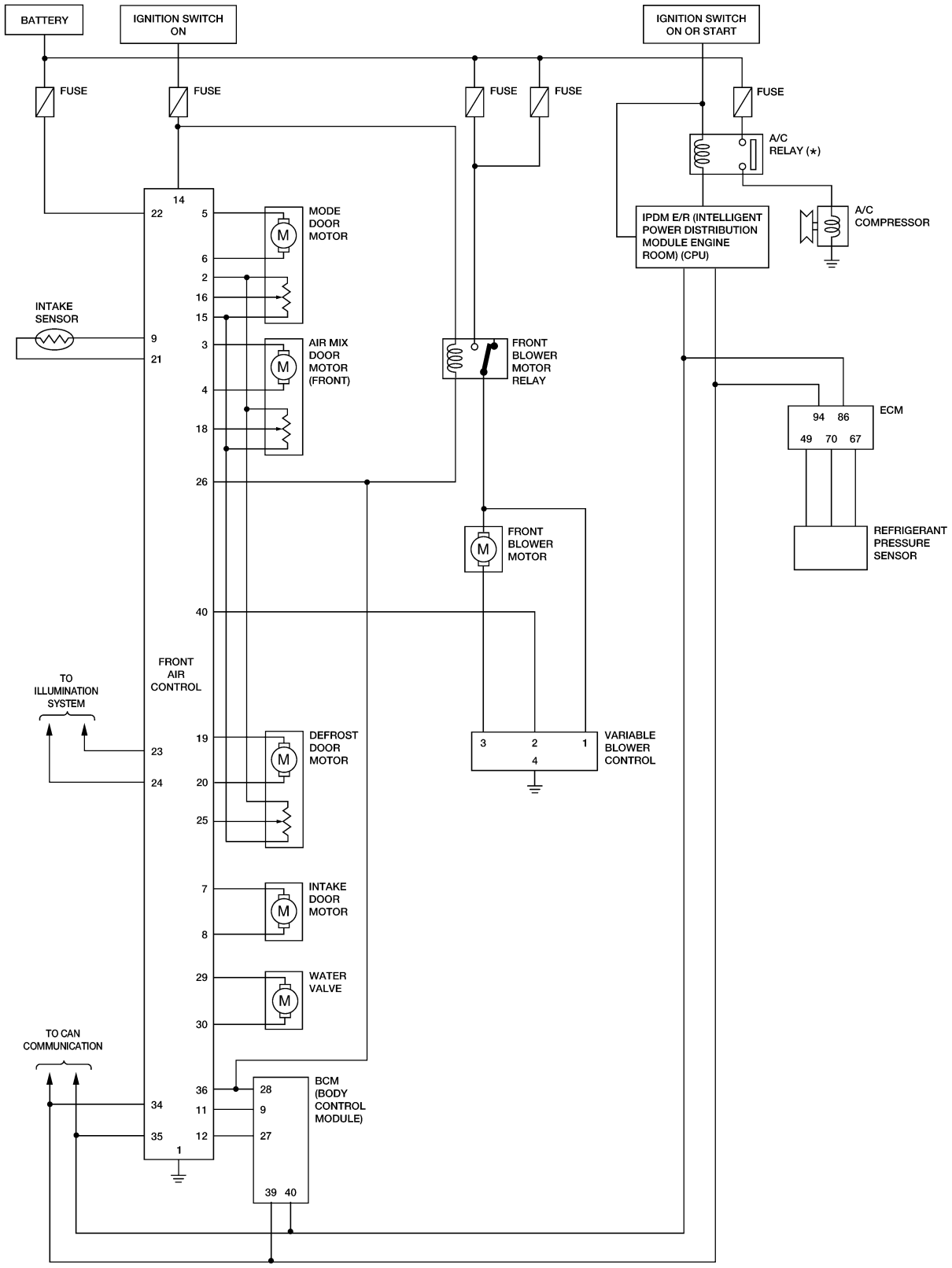

*: THIS RELAY IS BUILT INTO THE IPDM E/R
(INTELLIGENT POWER DISTRIBUTION MODULE ENGINE ROOM)

WJWA0334E

Wiring Diagram — A/C,M —

EJS003U0

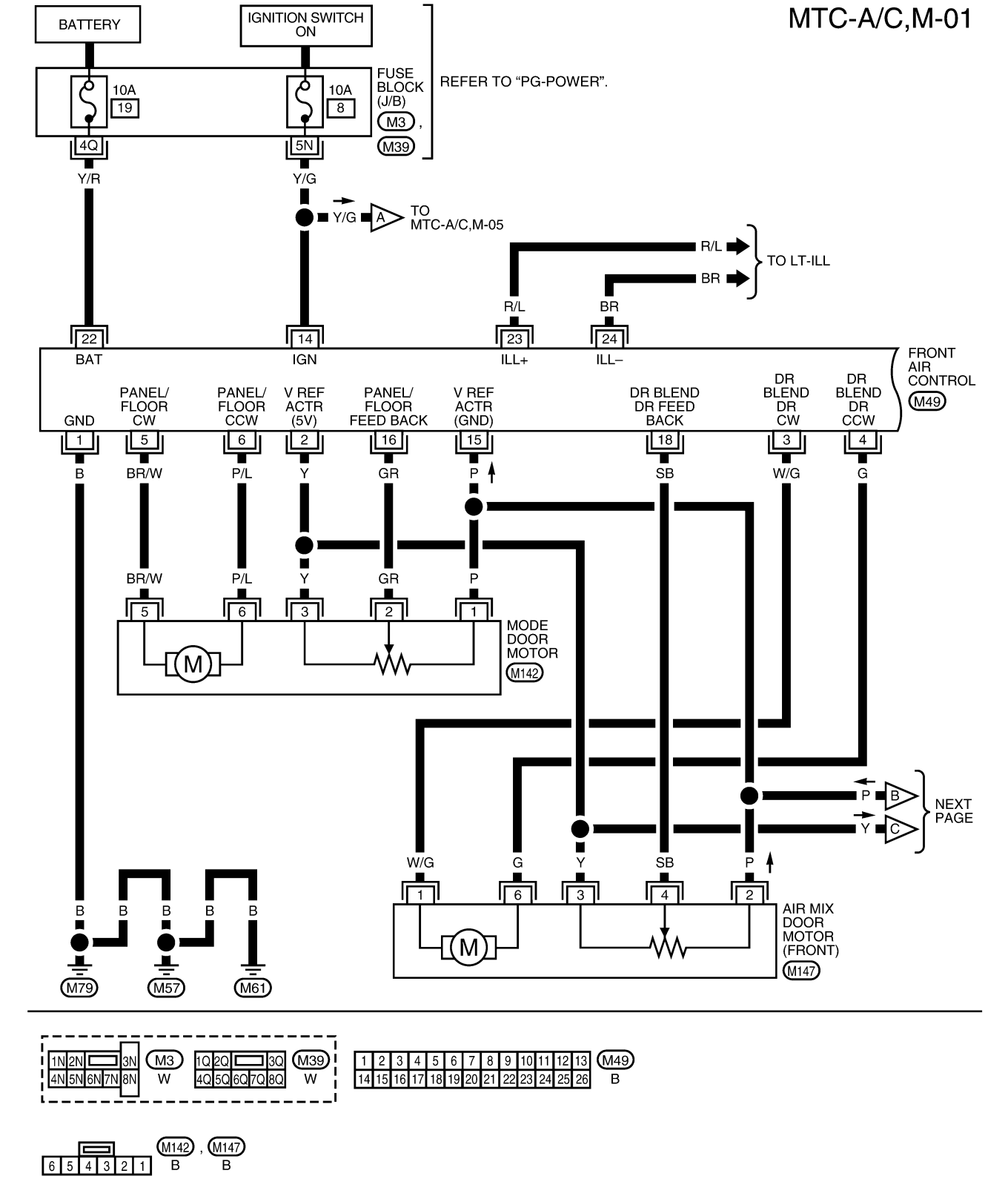

WJWA0335E

MTC-A/C,M-02

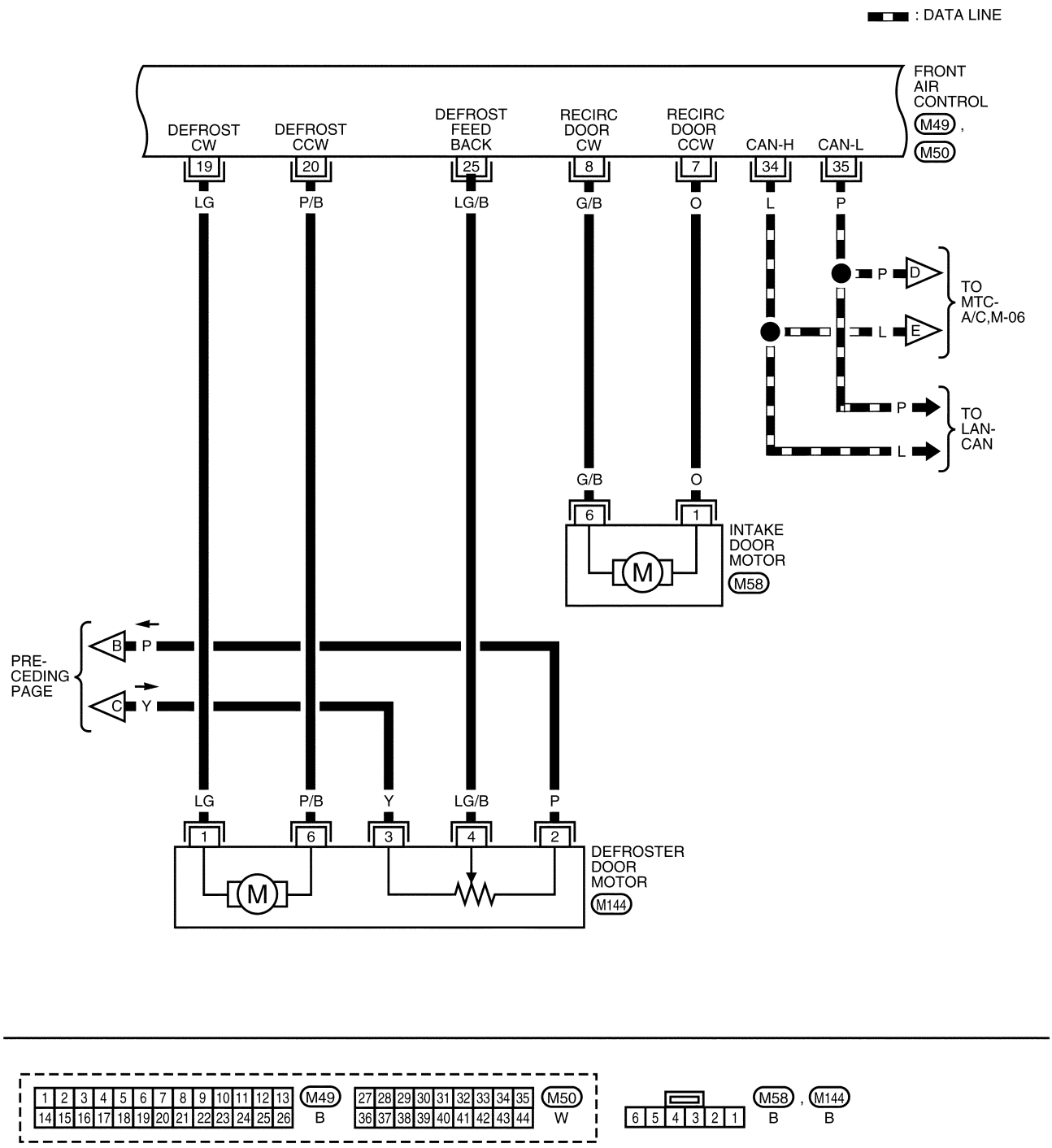

WJWA0336E

MTC-A/C,M-03

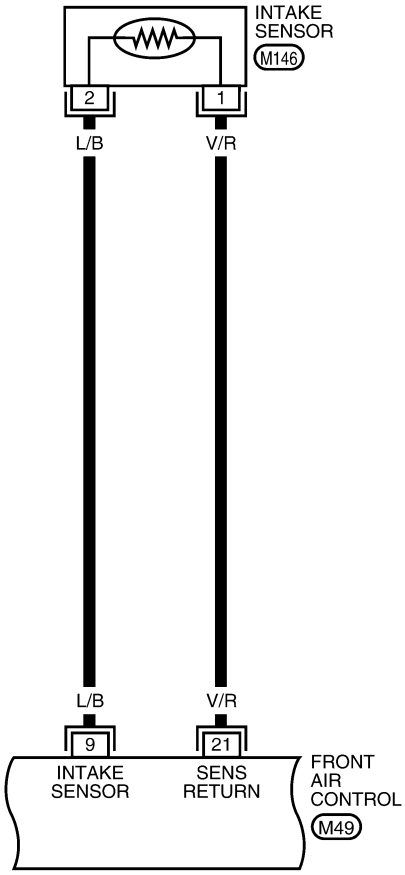

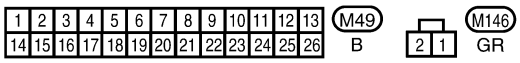

WJWA0220E

MTC-A/C,M-04

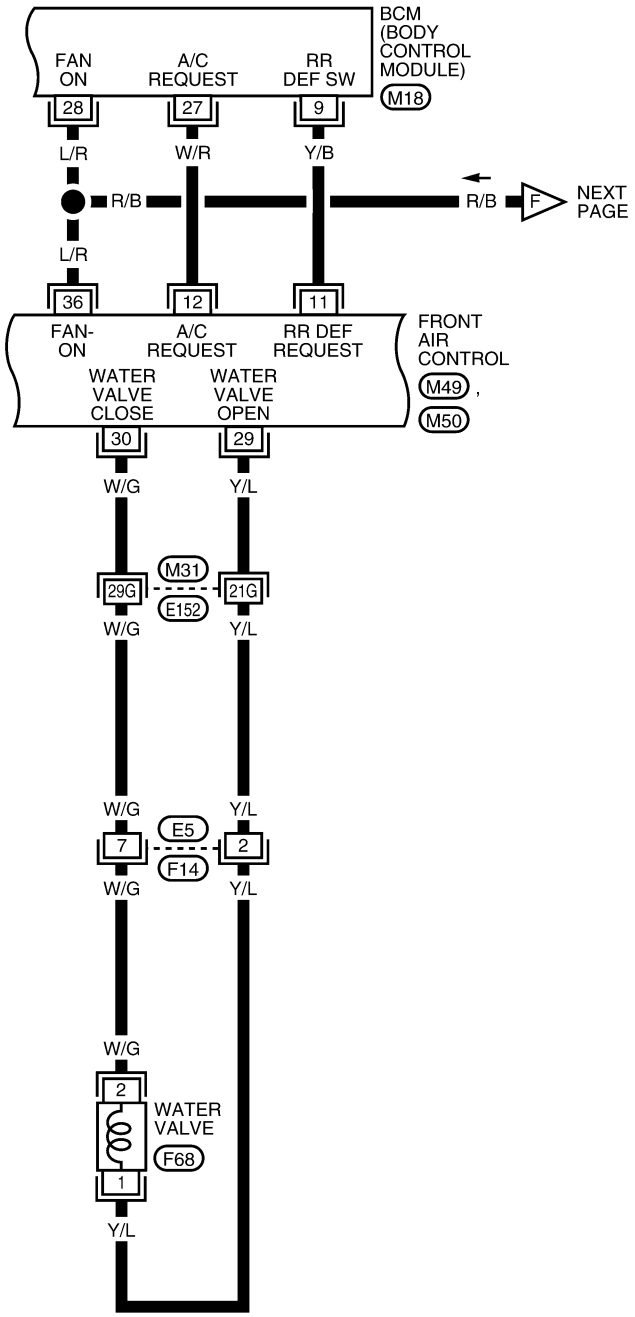

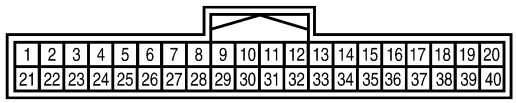

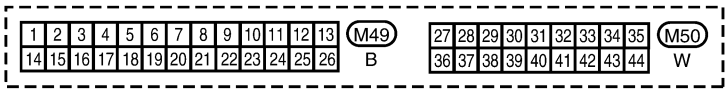

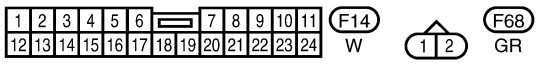

REFER TO THE FOLLOWING.
M31 - SUPER MULTIPLE JUNCTION (SMJ)

WJWA0337E

MTC-A/C,M-05

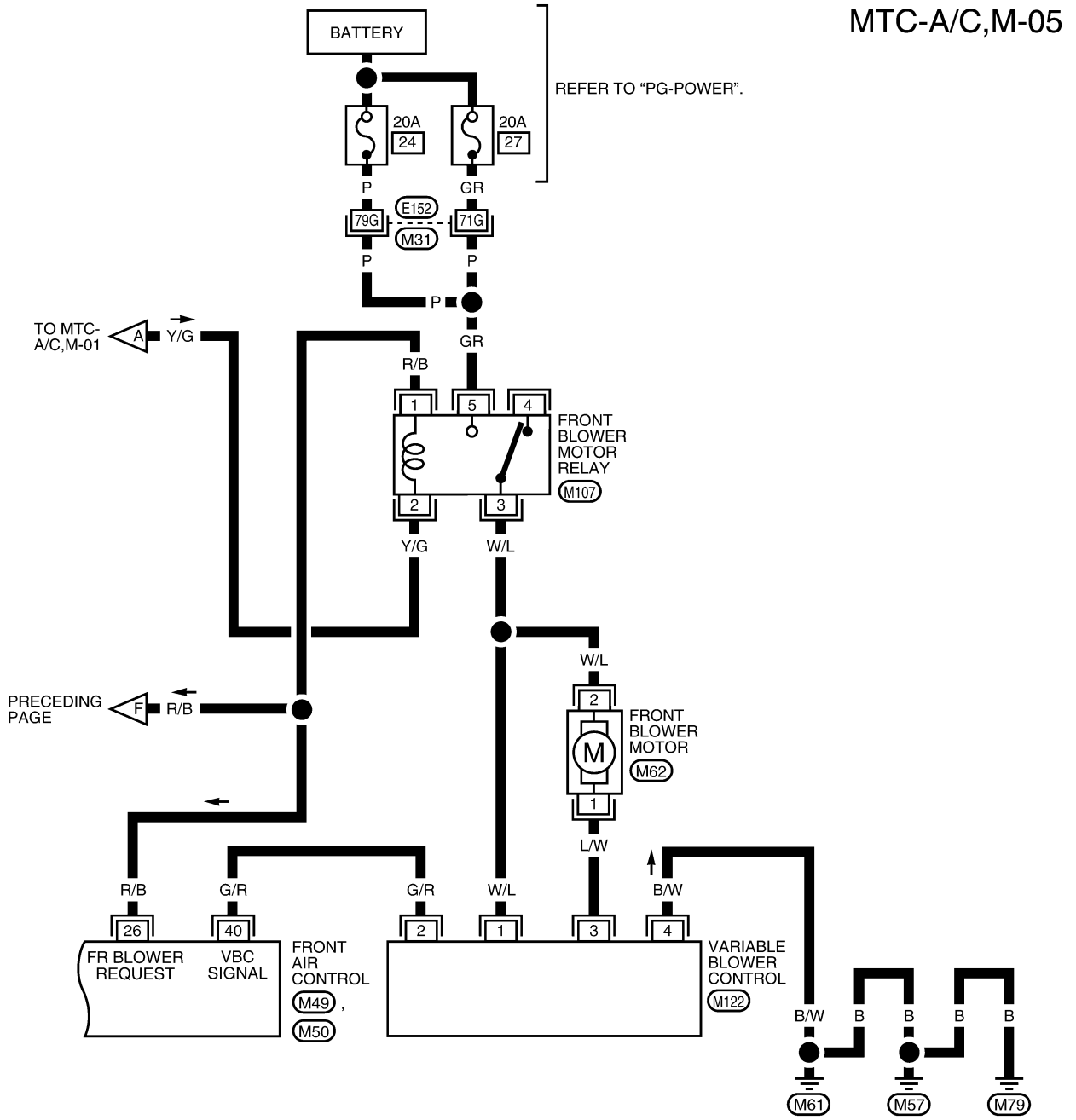

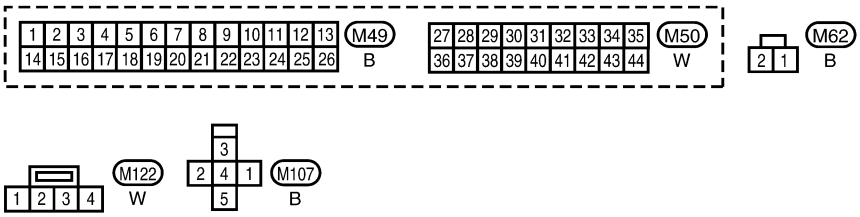

REFER TO THE FOLLOWING.
M31 - SUPER MULTIPLE JUNCTION (SMJ)

WJWA0338E

MTC-A/C,M-06

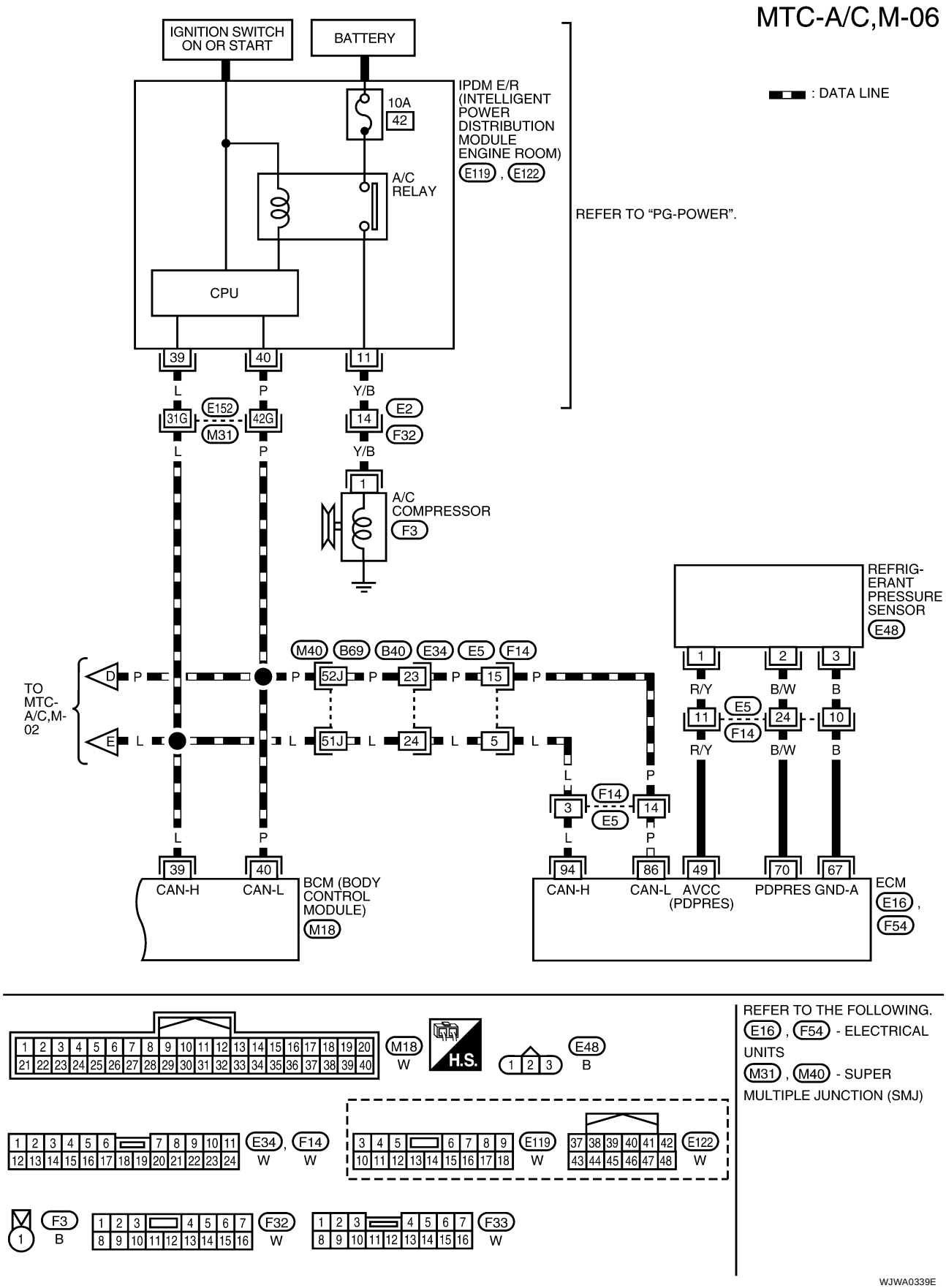

REFER TO THE FOLLOWING.
E16 , F54 - ELECTRICAL UNITS
M31 , M40 - SUPER MULTIPLE JUNCTION (SMJ)

WJWA0339E

Front Air Control Terminals and Reference Value

EJS003U1

Measure voltage between each terminal and ground by following Terminals and Reference Value for Front Air Control.

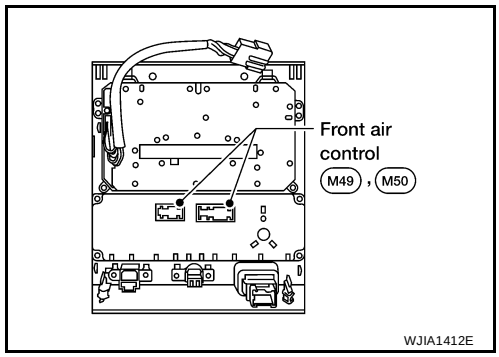

PIN CONNECTOR TERMINAL LAYOUT

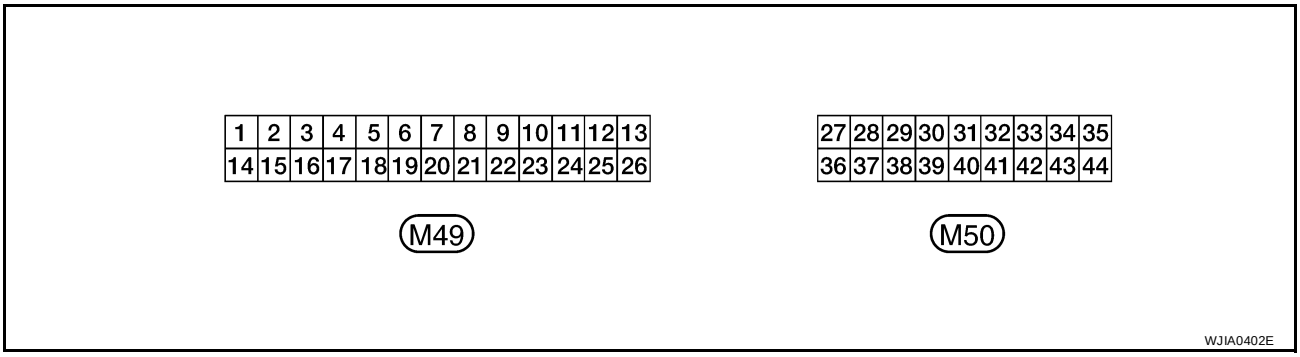

TERMINALS AND REFERENCE VALUE FOR FRONT AIR CONTROL

Terminal No.	Wire color	Item	Ignition switch	Condition	Voltage (V) (Approx.)
1	B	Ground	-	-	0V
2	Y	Sensor power	ON	-	5V
3	W/G	Air mix door motor (front) CW	ON	Clockwise rotation	Battery voltage
4	G	Air mix door motor (front) CCW	ON	Counterclockwise rotation	Battery voltage
5	BR/W	Mode door motor CW	ON	Clockwise rotation	Battery voltage
6	P/L	Mode door motor CCW	ON	Counterclockwise rotation	Battery voltage
7	O	Intake door motor CCW	ON	Counterclockwise rotation	Battery voltage
8	G/B	Intake door motor CW	ON	Clockwise rotation	Battery voltage
9	L/B	Intake sensor	ON	-	0 - 5V
11	Y/B	Rear defroster request	ON	-	Battery voltage
12	W/R	Compressor ON signal	ON	A/C switch OFF	5V
			ON	A/C switch ON	0V
14	Y/G	Power supply for IGN	ON	-	Battery voltage
15	P	Sensor ground	ON	-	0V
16	GR	Mode door motor feedback	ON	-	0 - 5V
18	SB	Air mix door motor (front) feedback	ON	-	0 - 5V
19	LG	Defroster door motor CW	ON	Clockwise rotation	Battery voltage
20	P/B	Defroster door motor CCW	ON	Counterclockwise rotation	Battery voltage
21	V/R	Sensor return	ON	-	0 - 5V
22	Y/R	Power supply for BAT	-	-	Battery voltage
23	R/L	Illumination +	ON	Park lamps ON	Battery voltage

Terminal No.	Wire color	Item	Ignition switch	Condition	Voltage (V) (Approx.)
24	BR	Illumination -	-	Park lamps ON	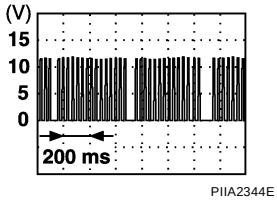
25	LG/B	Defroster door motor feedback	ON	-	0 - 5V
26	R/B	Front blower request	ON	Front blower motor OFF	Battery voltage
				Front blower motor ON	0V
29	Y/L	Water valve	ON	Water valve open	0V
				Water valve closed	5V
30	W/G	Water valve	ON	Water valve open	0V
				Water valve closed	Battery voltage
34	L	CAN-H	ON	-	0 - 5V
35	P	CAN-L	ON	-	0 - 5V
36	L/R	Fan ON signal	ON	Blower control dial OFF	5V
				Blower control dial ON	0V
40	G/R	Variable Blower Control output	ON	-	0 - 5V

Operational Check

EJS003U3

The purpose of the operational check is to confirm that the system operates properly.

Conditions : Engine running and at normal operating temperature

CHECKING BLOWER

1. Turn blower control dial clockwise. Blower should operate on low speed.
2. Turn the blower control dial again, and continue checking blower speed and fan symbol until all speeds are checked.
3. Leave blower on maximum speed.

If NG, go to MTC-72, "DIAGNOSTIC PROCEDURE FOR BLOWER MOTOR"
If OK, continue with next check.

CHECKING DISCHARGE AIR

1. Turn the mode switch to each mode position.
2. Confirm that discharge air comes out according to the air distribution table. Refer to MTC-26, "Discharge Air Flow" .

Mode door position is checked in the next step.
If NG, go to trouble diagnosis procedure for MTC-51, "Mode Door Motor Circuit" .
If OK, continue with next check.

NOTE:
Confirm that the compressor clutch is engaged (sound or visual inspection) and intake door position is at fresh when the DEF or D/F is selected.

Discharge air flow

Mode door position	Air outlet/distribution		
	Vent	Foot	Defroster
	100%	–	–
	50%	50%	–
	–	(100%)	–
	–	60%	40%
	–	–	100%

WJIA1297E

CHECKING RECIRCULATION (, ONLY)

1. Press recirculation ( ) switch one time. Recirculation indicator should illuminate.
2. Press recirculation ( ) switch one more time. Recirculation indicator should go off.
3. Listen for intake door position change (blower sound should change slightly).

If NG, go to trouble diagnosis procedure for MTC-61, "Intake Door Motor Circuit" .
If OK, continue with next check.

NOTE:
Confirm that the compressor clutch is engaged (sound or visual inspection) and intake door position is at fresh when the DEF, D/F or floor is selected. Recirculation is not allowed in DEF, D/F, or floor.

CHECKING TEMPERATURE DECREASE

1. Rotate temperature control dial counterclockwise.
2. Check for cold air at appropriate discharge air outlets.

If NG, listen for sound of air mix door motor (front) operation if OK, go to trouble diagnosis procedure for MTC-82, "Insufficient Cooling" . If air mix door motor (front) appears to be malfunctioning, go to MTC-57, "DIAGNOSTIC PROCEDURE FOR AIR MIX DOOR MOTOR (FRONT)" .
If OK, continue with next check.

CHECKING TEMPERATURE INCREASE

1. Rotate temperature control dial clockwise.
2. Check for hot air at appropriate discharge air outlets.

If NG, listen for sound of air mix door motor (front) operation. If OK, go to trouble diagnosis procedure for MTC-89, "Insufficient Heating" . If air mix door motor (front) appears to be malfunctioning, go to MTC-57, "DIAGNOSTIC PROCEDURE FOR AIR MIX DOOR MOTOR (FRONT)" .
If OK, continue with next check.

CHECK A/C SWITCH

1. Press A/C switch with the blower control dial in any position except OFF.
2. A/C switch indicator will turn ON.
   - Confirm that the compressor clutch engages (sound or visual inspection).

NOTE:
Confirm that the compressor clutch is engaged (sound or visual inspection).
If NG, go to trouble diagnosis procedure for MTC-77, "Magnet Clutch Circuit" .
If OK, continue with next check.

Power Supply and Ground Circuit for Front Air Control

EJS003U5

SYMPTOM: A/C system does not come on.

INSPECTION FLOW

1. Confirm symptom by performing the following operatonal check.

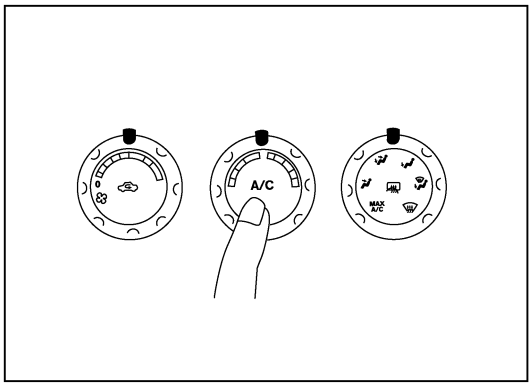

OPERATIONAL CHECK –

a. Press A/C switch.
b. Display should indicate A/C.
Confirm that the compressor clutch engages (Sound or visual inspection).

If OK (symptom cannot be duplicated), perform complete operational check (*2).
If NG (symptom is confirmed), continue with STEP-2 following.

2. Check for any service bulletins. → 3. Check Main Power Supply and Ground Circuit. (*1) → 4. Replace front air control.

WJIA1411E

*1 MTC-48, "Power Supply and Ground Circuit for Front Air Control".
*2 MTC-46, "Operational Check".

COMPONENT DESCRIPTION

Front Air Control

The front air control has a built-in microcomputer which processes information sent from various sensors needed for air conditioner operation. The air mix door motor (front), mode door motor, intake door motor, defroster door motor, blower motor and compressor are then controlled.
The front air control is unitized with control mechanisms. When the various switches and temperature control dial are operated, data is input to the front air control.

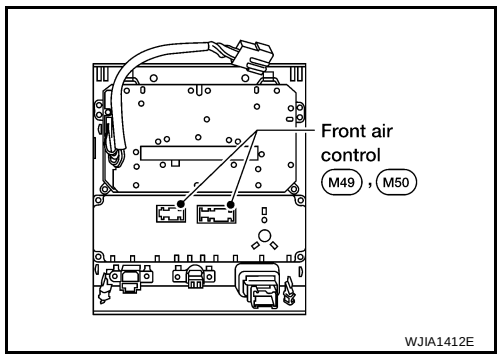

Potentio Temperature Control (PTC)

The PTC is built into the front air control. It can be set from cold to hot or any intermediate position by rotating the temperature control dial.

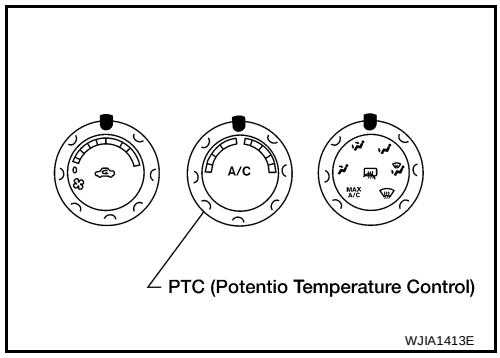

DIAGNOSTIC PROCEDURE FOR A/C SYSTEM

SYMPTOM: A/C system does not come on.

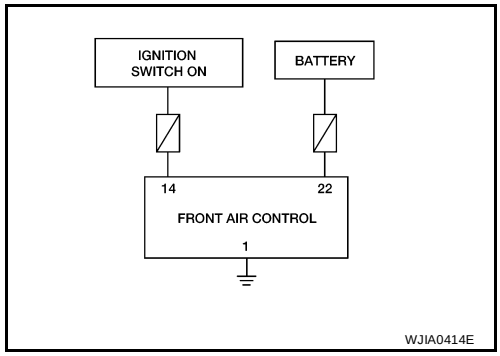

1. CHECK POWER SUPPLY CIRCUITS FOR FRONT AIR CONTROL

1. Disconnect front air control connector.
2. Check voltage between front air control harness connector M49 terminals 14 and 22, and ground.

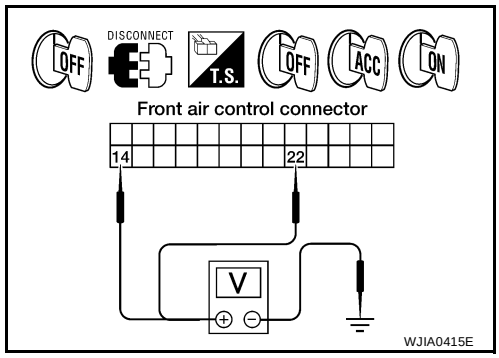

Terminals			Ignition switch position		
(+)		(-)	OFF	ACC	ON
Front air control connector	Terminal No.				
M49	14	Ground	Approx. 0V	Approx. 0V	Battery voltage
M49	22		Battery voltage	Battery voltage	Battery voltage

OK or NG

OK >> GO TO 2.

NG >> Check 10A fuses [Nos. 8 and 19, located in the fuse block (J/B)]. Refer to PG-80, "FUSE BLOCK-JUNCTION BOX (J/B)" .

- If fuses are OK, check harness for open circuit. Repair or replace as necessary.
- If fuses are NG, replace fuse and check harness for short circuit. Repair or replace as necessary.

2. CHECK GROUND CIRCUIT FOR FRONT AIR CONTROL

1. Turn ignition switch OFF.
2. Check continuity between front air control harness connector M49 terminal 1 and ground.

1 - Ground : Continuity should exist.

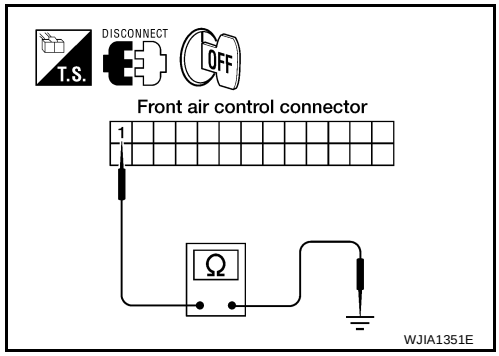

OK or NG

OK >> Replace front air control. Refer to MTC-95, "CONTROL UNIT" .

NG >> Repair harness or connector as necessary.

Mode Door Motor Circuit

EJS003U6

SYMPTOM:

- Air outlet does not change.
- Mode door motor does not operate normally.

INSPECTION FLOW

1. Confirm symptom by performing the following operational check.

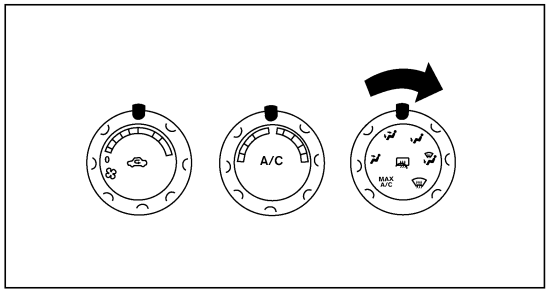

OPERATIONAL CHECK – Discharge air

a. Turn the mode dial four times and DEF position.

Discharge air flow

Mode door position	Air outlet/distribution		
	Vent	Foot	Defroster
	100%	–	–
	50%	50%	–
	–	100%	–
	–	60%	40%
	–	–	100%

b. Confirm that discharge air comes out according to the air distribution table at left.
Refer to “Discharge Air Flow” (*1).

NOTE:

- **If OK (symptom cannot be duplicated), perform complete operational check (*2).**
  If NG (symptom is confirmed), continue with STEP-2 following.
- **Confirm that the compressor clutch is engaged (visual inspection) and intake door position is at FRESH when DEF or D/F is selected.**

2. Check for any service bulletins.

3. Check mode door mechanism.

Check the PBR circuit (*3). — NG → Repair PBR circuit or replace motor.

YES

If the symptom still exists, perform a complete “Operational Check” (*2) and check for other symptoms. [Refer to “Symptoms table” (*4).]
Does another symptom exist?

YES → Go to Trouble Diagnosis for related symptom.

NO → Replace front air control (*5).

WJIA1926E

*1 MTC-26, "Discharge Air Flow"
*2 MTC-46, "Operational Check"
*3 MTC-52, "DIAGNOSTIC PROCEDURE FOR MODE DOOR MOTOR"
*4 MTC-34, "SYMPTOM TABLE"
*5 MTC-95, "CONTROL UNIT"

SYSTEM DESCRIPTION

Component Parts

Mode door control system components are:

- Front air control

- Mode door motor
- PBR (built into mode door motor)

System Operation

The mode door position (vent, B/L, D/F, foot, and defrost) is set by the front air control by means of the mode door motor. When a mode door position is selected on the front air control, voltage is applied to one circuit of the mode door motor while ground is applied to the other circuit, causing the mode door motor to rotate. The direction of rotation is determined by which circuit has voltage applied to it, and which one has ground applied to it. The front air control monitors the mode door position by measuring the voltage signal on the PBR circuit.

COMPONENT DESCRIPTION

Mode Door Motor

The mode door motor is attached to the heater & cooling unit assembly. It rotates so that air is discharged from the outlet as indicated by the front air control. Motor rotation is conveyed to a link which activates the mode door.

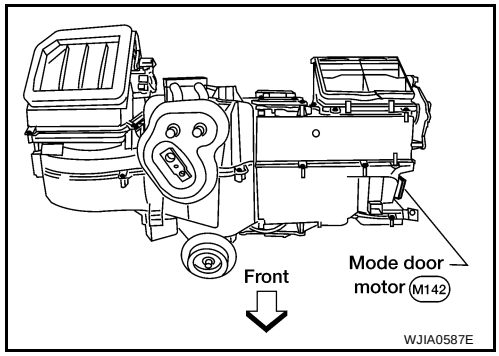

DIAGNOSTIC PROCEDURE FOR MODE DOOR MOTOR

1. CHECK FRONT AIR CONTROL FOR POWER AND GROUND

1. Turn ignition switch ON.
2. Turn the mode switch to the B/L ( ) mode.
3. Check voltage between front air control harness connector M49 terminal 5 and terminal 6 while turning the mode switch to the floor ( ) mode.

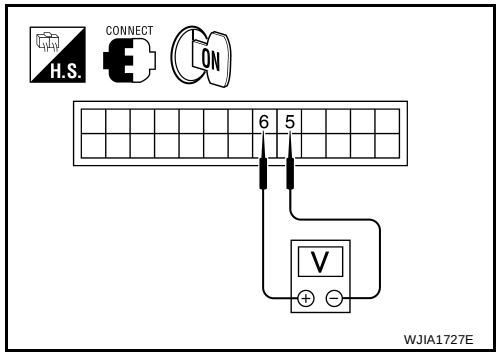

Connector	Terminals		Condition	Voltage (Approx.)
	(+)	(-)		
Front air control: M49	6	5	Turn mode switch	Battery voltage

OK or NG

OK >> GO TO 3.
NG >> GO TO 2.

2. CHECK MODE DOOR MOTOR CIRCUITS FOR SHORT TO GROUND

1. Turn ignition switch OFF.
2. Disconnect the front air control harness connector.
3. Check continuity between front air control harness connector M49 terminal 5, 6 and ground.

5 - Ground : Continuity should not exist.
6 - Ground : Continuity should not exist.

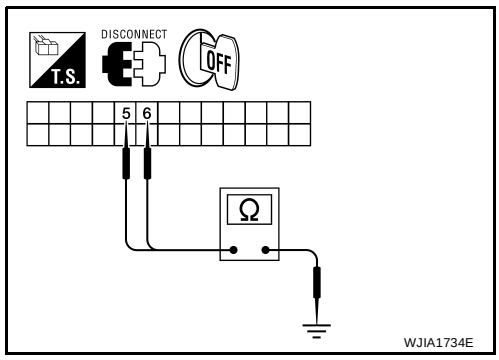

OK or NG

OK >> Replace front air control. Refer to MTC-95, "REMOVAL".
NG >> Repair or replace harness as necessary.

3. CHECK FRONT AIR CONTROL FOR GROUND AND POWER

1. Turn the mode switch to the D/F ( ) mode.
2. Check voltage between front air control harness connector M49 terminal 5 and terminal 6 while turning the mode switch to the vent ( ) mode.

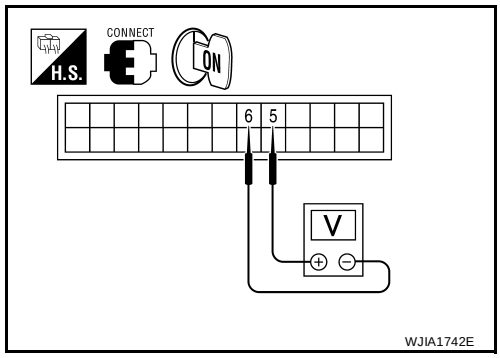

Connector	Terminals		Condition	Voltage (Approx.)
	(+)	(-)		
Front air control: M49	5	6	Turn mode switch	Battery voltage

OK or NG

OK >> GO TO 4.
NG >> Replace front air control. Refer to MTC-95, "REMOVAL" .

4. CHECK MODE DOOR MOTOR AND CIRCUITS FOR OPEN

1. Turn ignition switch OFF.
2. Disconnect the front air control harness connector.
3. Check continuity between front air control harness connector M49 terminal 5 and terminal 6.

Continuity should exist.

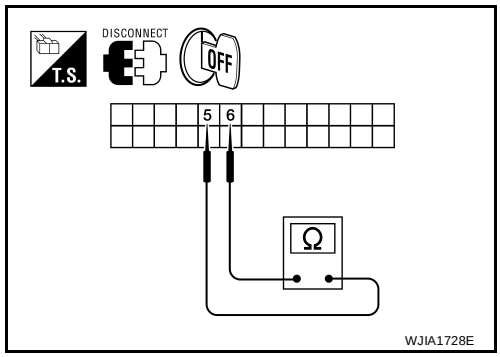

OK or NG

OK >> GO TO 6.
NG >> GO TO 5.

5. CHECK MODE DOOR MOTOR CIRCUITS FOR OPEN

1. Disconnect the mode door motor harness connector.
2. Check continuity between front air control harness connector M49 terminal 5, 6 and the mode door motor harness connector terminal 5, 6.

5 - 5 : Continuity should exist.
6 - 6 : Continuity should exist.

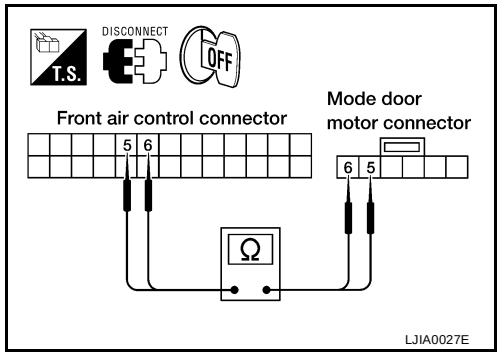

OK or NG

OK >> Replace mode door motor. Refer to MTC-106, "MODE DOOR MOTOR" .
NG >> Repair or replace harness as necessary.

6. CHECK FRONT AIR CONTROL FOR PBR POWER AND GROUND

1. Reconnect front air control harness connector.
2. Turn ignition switch ON.
3. Check voltage between front air control harness connector M49 terminal 2 and terminal 15.

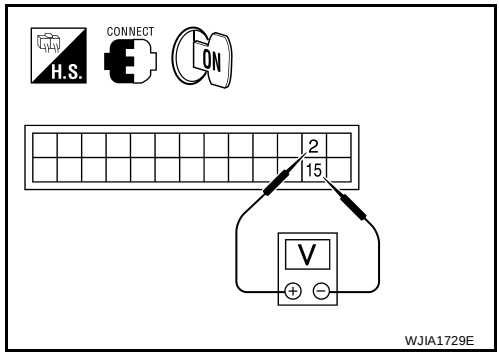

Connector	Terminals		Voltage (Approx.)
	(+)	(-)	
Front air control: M49	2	15	5V

OK or NG

OK >> GO TO 8.
NG >> GO TO 7.

7. CHECK PBR REFERENCE VOLTAGE CIRCUIT FOR SHORT TO GROUND

1. Turn ignition switch OFF.
2. Disconnect the front air control harness connector.
3. Check continuity between front air control harness connector M49 terminal 2 and ground.

Continuity should not exist.

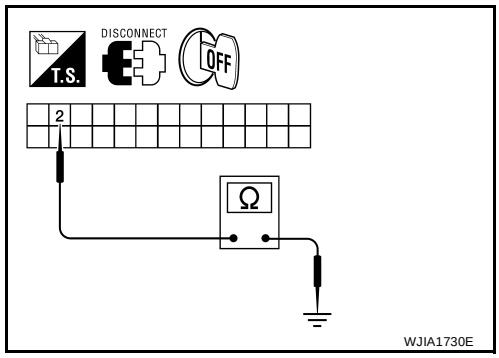

OK or NG

OK >> Replace front air control. Refer to MTC-95, "REMOVAL" .

NG >> Repair or replace harness as necessary.

8. CHECK PBR REFERENCE VOLTAGE AND GROUND CIRCUITS

1. Turn ignition switch OFF.
2. Disconnect the front air control harness connector.
3. Check continuity between front air control harness connector M49 terminal 2 and terminal 15.

Continuity should exist.

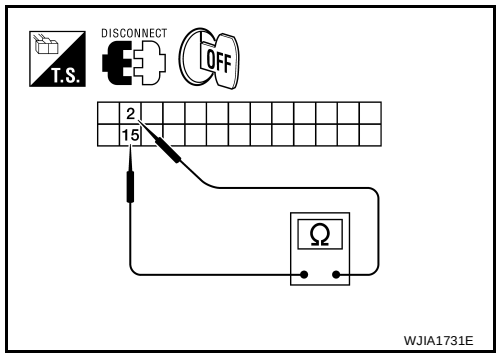

OK or NG

OK >> GO TO 10.

NG >> GO TO 9.

9. CHECK PBR REFERENCE VOLTAGE CIRCUIT FOR OPEN

1. Disconnect the mode door motor harness connector.
2. Check continuity between mode door motor harness connector M142 (B) terminal 3, 1 and front air control harness connector M49 (A) terminal 2, 15.

2 - 3 : Continuity should exist.

15 - 1 : Continuity should exist.

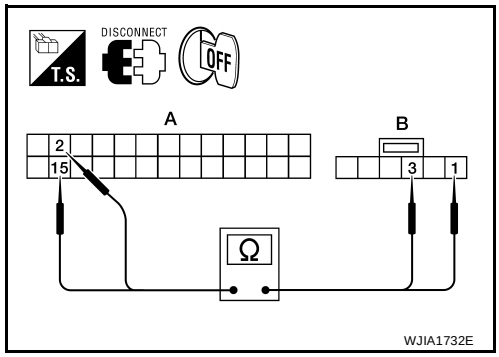

OK or NG

OK >> Replace mode door motor. Refer to MTC-106, "MODE DOOR MOTOR" .

NG >> Repair or replace harness as necessary.

10. CHECK PBR FEEDBACK VOLTAGE

1. Reconnect the front air control harness connector.
2. Turn ignition switch ON.
3. Check voltage between front air control harness connector M49 terminal 16 and ground while cycling mode switch through all modes.

Voltage : Approx. 1V - 4.5V

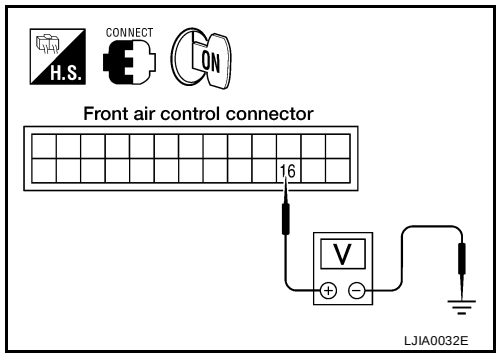

OK or NG

OK >> GO TO 12.

NG >> GO TO 11.

11. CHECK PBR FEEDBACK SIGNAL CIRCUIT FOR SHORT TO GROUND

1. Turn ignition switch OFF.
2. Disconnect front air control harness connector.
3. Check continuity between front air control harness connector M49 terminal 16 and ground.

Continuity should not exist.

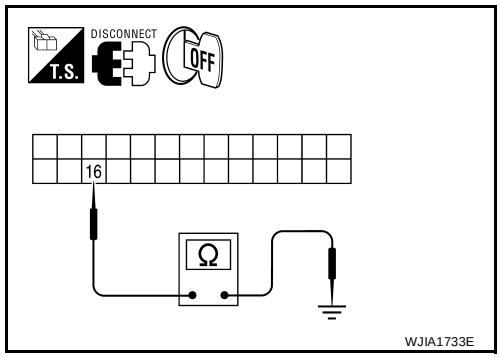

OK or NG

OK >> Replace front air control. Refer to MTC-95, "REMOVAL" .

NG >> Repair or replace harness as necessary.

12. CHECK PBR FEEDBACK CIRCUIT FOR OPEN

1. Turn ignition switch OFF.
2. Disconnect the mode door motor harness connector and front air control harness connector.
3. Check continuity between mode door motor harness connector M142 terminal 2 and front air control harness connector M49 terminal 16.

Continuity should exist.

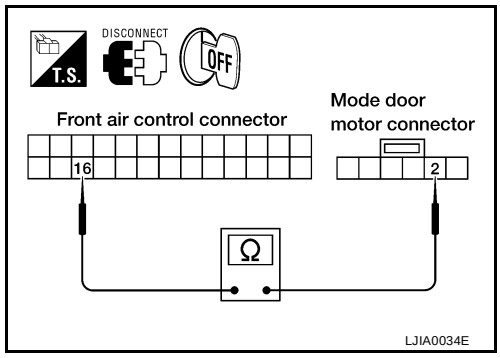

OK or NG

OK >> Replace mode door motor. Refer to MTC-106, "MODE DOOR MOTOR" .

NG >> Repair or replace harness as necessary.

Air Mix Door Motor Circuit

EJS003U7

SYMPTOM:

- Discharge air temperature does not change.
- Air mix door motor (front) does not operate.

INSPECTION FLOW

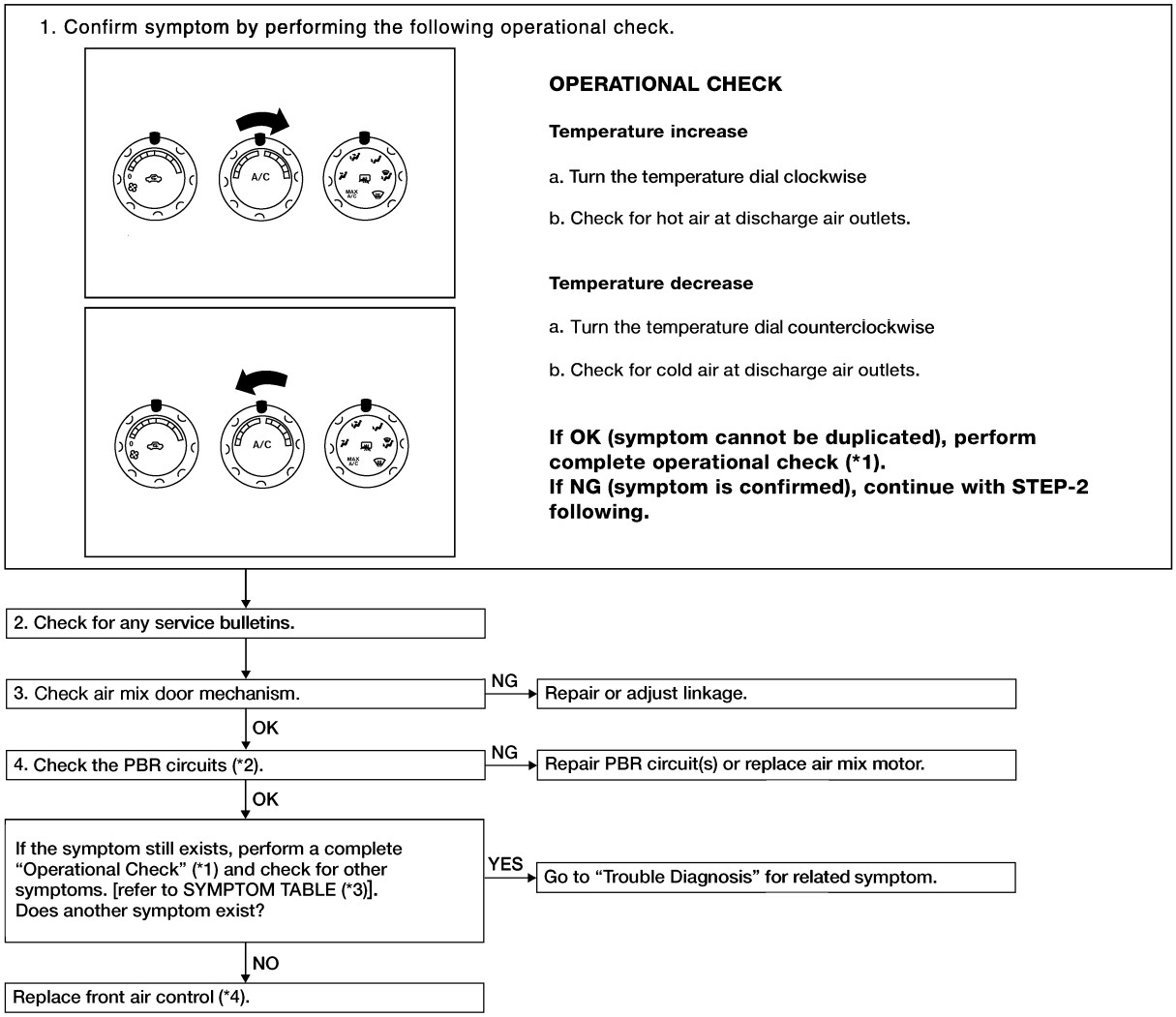

WJIA1927E

*1 MTC-46, "Operational Check"

*2 MTC-57, "DIAGNOSTIC PROCEDURE FOR AIR MIX DOOR MOTOR (FRONT)"

*3 MTC-34, "SYMPTOM TABLE"

*4 MTC-95, "CONTROL UNIT"

SYSTEM DESCRIPTION

Component Parts

Air mix door control system components are:

- Front air control
- Air mix door motor (front)
- PBR (built-into air mix motor)

System Operation

The front air control receives data from the temperature selected by the driver. The front air control then applies a voltage to one circuit of the appropriate air mix door motor (front), while ground is applied to the other circuit, causing the appropriate air mix door motor (front) to rotate. The direction of rotation is determined by which circuit has voltage applied to it, and which one has ground applied to it. The front air control monitors the air mix door positions by measuring the voltage signal on the PBR circuits of each door.

Air Mix Door Control Specification

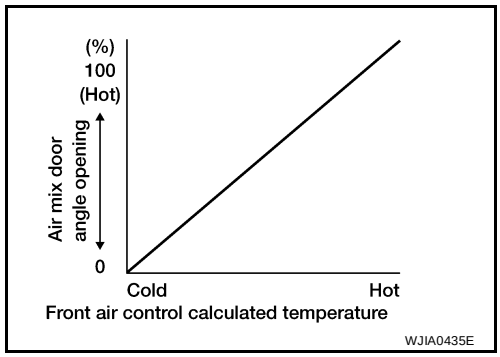

COMPONENT DESCRIPTION

Air Mix Door Motor (Front)

The front air mix door motor is attached to the front heater & cooling unit assembly. This motor rotates so that the air mix door is opened or closed to a position set by the front air control. Motor rotation is then conveyed through a shaft and the air mix door position is then fed back to the front air control by the PBR built into the air mix door motor (front).

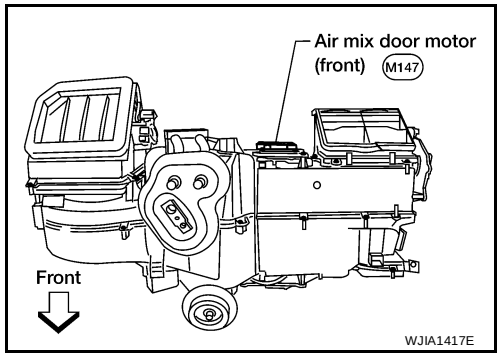

DIAGNOSTIC PROCEDURE FOR AIR MIX DOOR MOTOR (FRONT)

1. CHECK FRONT AIR CONTROL FOR POWER AND GROUND

1. Turn ignition switch ON.
2. Rotate temperature control dial (front) to maximum heat.
3. Check voltage between front air control harness connector M49 terminal 3 and terminal 4 while rotating temperature control dial (front) to maximum cold.

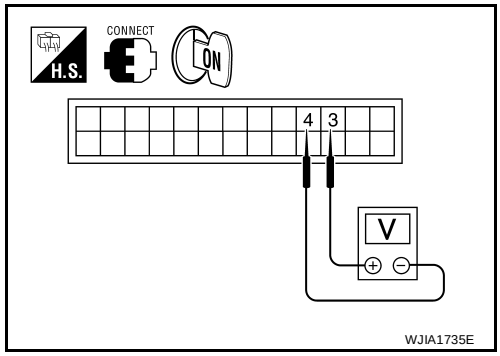

Connector	Terminals		Condition	Voltage (Approx.)
	(+)	(-)		
Front air control: M49	3	4	Rotate temp control dial	Battery voltage

OK or NG

OK >> GO TO 3.
NG >> GO TO 2.

2. CHECK AIR MIX DOOR MOTOR (FRONT) CIRCUITS FOR SHORT TO GROUND

1. Turn ignition switch OFF.
2. Disconnect the front air control harness connector.
3. Check continuity between front air control harness connector M49 terminal 3, 4 and ground.

3 - Ground : Continuity should not exist.
4 - Ground : Continuity should not exist.

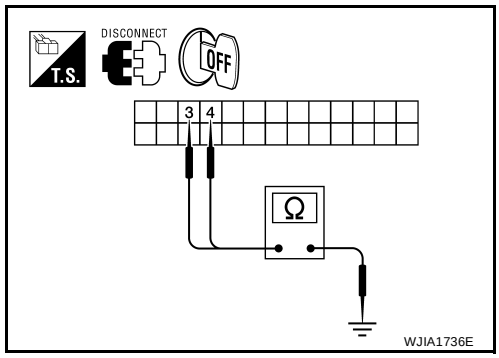

OK or NG

OK >> Replace front air control. Refer to MTC-95, "Removal and Installation" .
NG >> Repair or replace harness as necessary.

3. CHECK FRONT AIR CONTROL FOR POWER AND GROUND

1. Rotate temperature control dial (front) to maximum heat.
2. Check voltage between front air control harness connector M49 terminal 3 and terminal 4 while rotating temperature control dial (front) to maximum cold.

Connector	Terminals		Condition	Voltage (Approx.)
	(+)	(-)		
Front air control: M49	4	3	Rotate temp control dial	Battery voltage

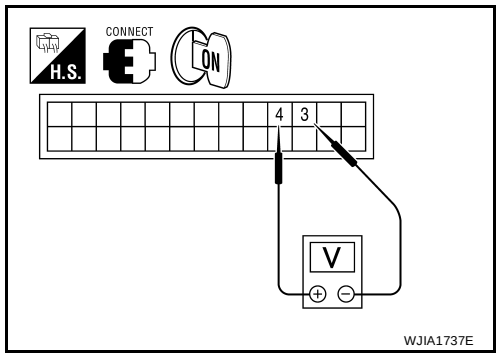

OK or NG

OK >> GO TO 4.
NG >> Replace front air control. Refer to MTC-95, "Removal and Installation" .

4. CHECK AIR MIX DOOR MOTOR (FRONT) CIRCUITS FOR OPEN

1. Turn ignition switch OFF.
2. Disconnect the front air control harness connector.
3. Check continuity between front air control harness connector M49 terminal 3 and terminal 4.

Continuity should exist.

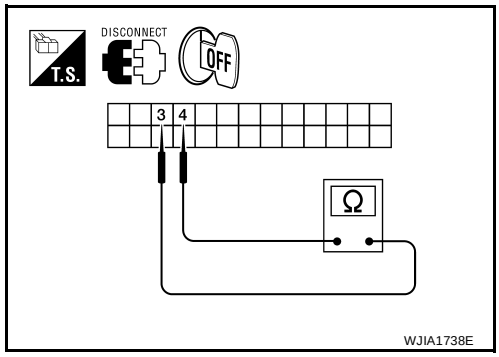

OK or NG

OK >> GO TO 6.
NG >> GO TO 5.

5. CHECK AIR MIX DOOR MOTOR (FRONT) CIRCUITS FOR OPEN

1. Disconnect the air mix door motor (front) harness connector.
2. Check continuity between front air control harness connector M49 (A) terminal 3, 4 and the air mix door motor (front) harness connector M147 (B) terminal 1, 6.

3 - 1 : Continuity should exist.
4 - 6 : Continuity should exist.

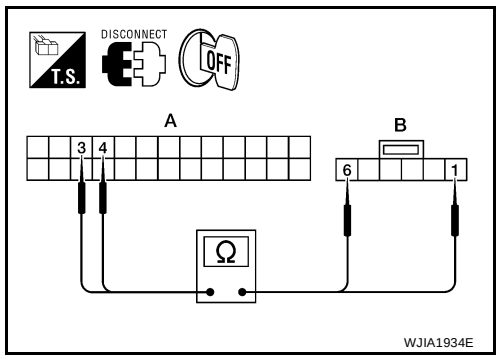

OK or NG

OK >> Replace air mix door motor (front). Refer to MTC-107, "Removal and Installation" .
NG >> Repair or replace harness as necessary.

6. CHECK FRONT AIR CONTROL FOR PBR POWER AND GROUND

1. Reconnect front air control harness connector.
2. Turn ignition switch ON.
3. Check voltage between front air control harness connector M49 terminal 2 and terminal 15.

Connector	Terminals		Voltage (Approx.)
	(+)	(-)	
Front air control: M49	2	15	5V

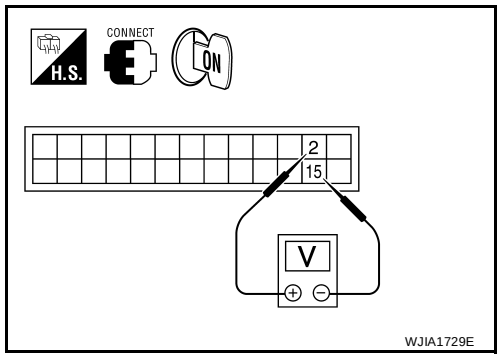

OK or NG

OK >> GO TO 8.
NG >> GO TO 7.

7. CHECK PBR REFERENCE VOLTAGE CIRCUIT FOR SHORT TO GROUND

1. Turn ignition switch OFF.
2. Disconnect the front air control harness connector.
3. Check continuity between front air control harness connector M49 terminal 2 and ground.

Continuity should not exist.

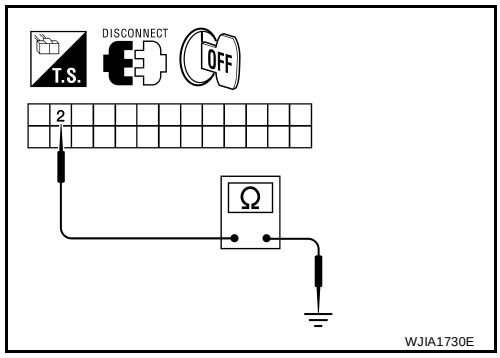

OK or NG

OK >> Replace front air control. Refer to MTC-95, "Removal and Installation" .
NG >> Repair or replace harness as necessary.

8. CHECK PBR REFERENCE VOLTAGE AND GROUND CIRCUITS

1. Turn ignition switch OFF.
2. Disconnect the front air control harness connector.
3. Check continuity between front air control harness connector M49 terminal 2 and terminal 15.

Continuity should exist.

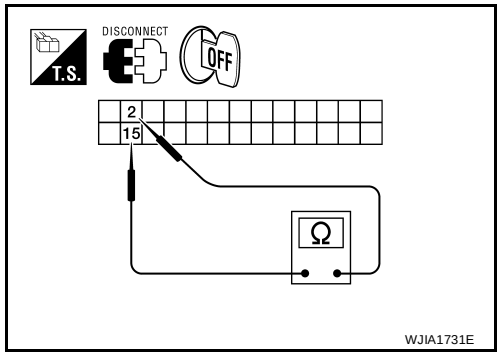

OK or NG

OK >> GO TO 10.
NG >> GO TO 9.

9. CHECK PBR REFERENCE VOLTAGE CIRCUIT FOR OPEN

1. Disconnect the air mix door motor (front) harness connector.
2. Check continuity between air mix door motor (front) harness connector M147 (B) terminal 3, 2 and front air control harness connector M49 (A) terminal 2, 15.

2 - 3 : Continuity should exist.
15 - 2 : Continuity should exist.

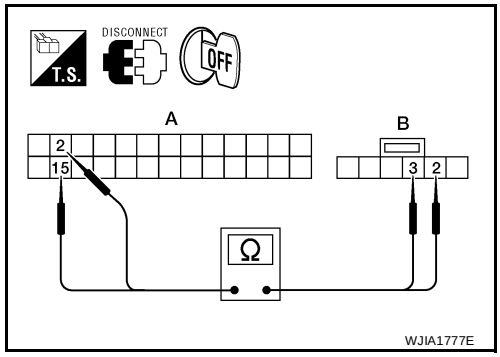

OK or NG

OK >> Replace air mix door motor (front). Refer to MTC-107, "Removal and Installation" .
NG >> Repair or replace harness as necessary.

10. CHECK PBR FEEDBACK VOLTAGE

1. Reconnect the front air control harness connector.
2. Turn ignition switch ON.
3. Check voltage between front air control harness connector M49 terminal 18 and ground while rotating temperature control dial from maximum heat to maximum cold.

Voltage : Approx. .5V - 4.5V

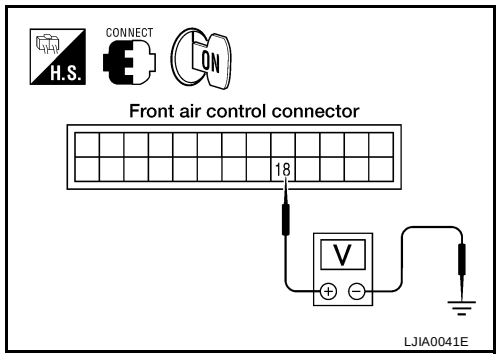

OK or NG

OK >> GO TO 12.
NG >> GO TO 11.

11. CHECK PBR FEEDBACK SIGNAL CIRCUIT FOR SHORT TO GROUND

1. Turn ignition switch OFF.
2. Disconnect front air control harness connector.
3. Check continuity between front air control harness connector M49 terminal 18 and ground.

Continuity should not exist.

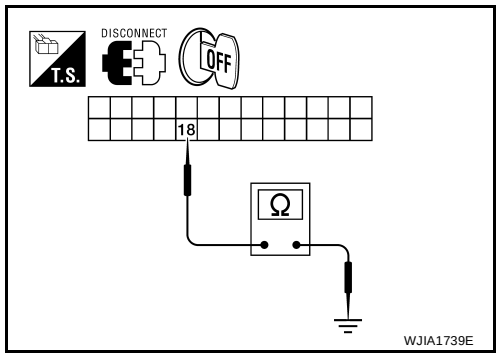

OK or NG

OK >> Replace front air control. Refer to MTC-95, "Removal and Installation" .
NG >> Repair or replace harness as necessary.

12. CHECK PBR FEEDBACK CIRCUIT FOR OPEN

1. Turn ignition switch OFF.
2. Disconnect the air mix door motor (front) harness connector and front air control harness connector.
3. Check continuity between air mix door motor (front) harness connector M147 (B) terminal 4 and front air control harness connector M49 (A) terminal 18.

Continuity should exist.

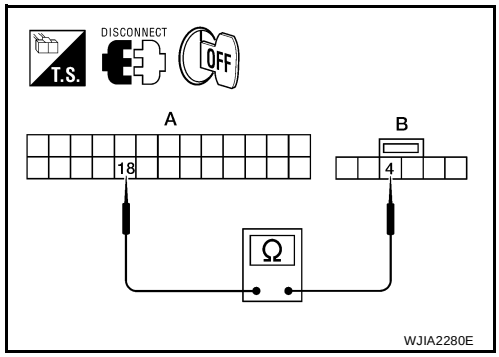

OK or NG

OK >> Replace air mix door motor (front). Refer to MTC-107, "Removal and Installation" .
NG >> Repair or replace harness as necessary.

Intake Door Motor Circuit

EJS003U8

SYMPTOM:

- Intake door does not change.
- Intake door motor does not operate normally.

INSPECTION FLOW

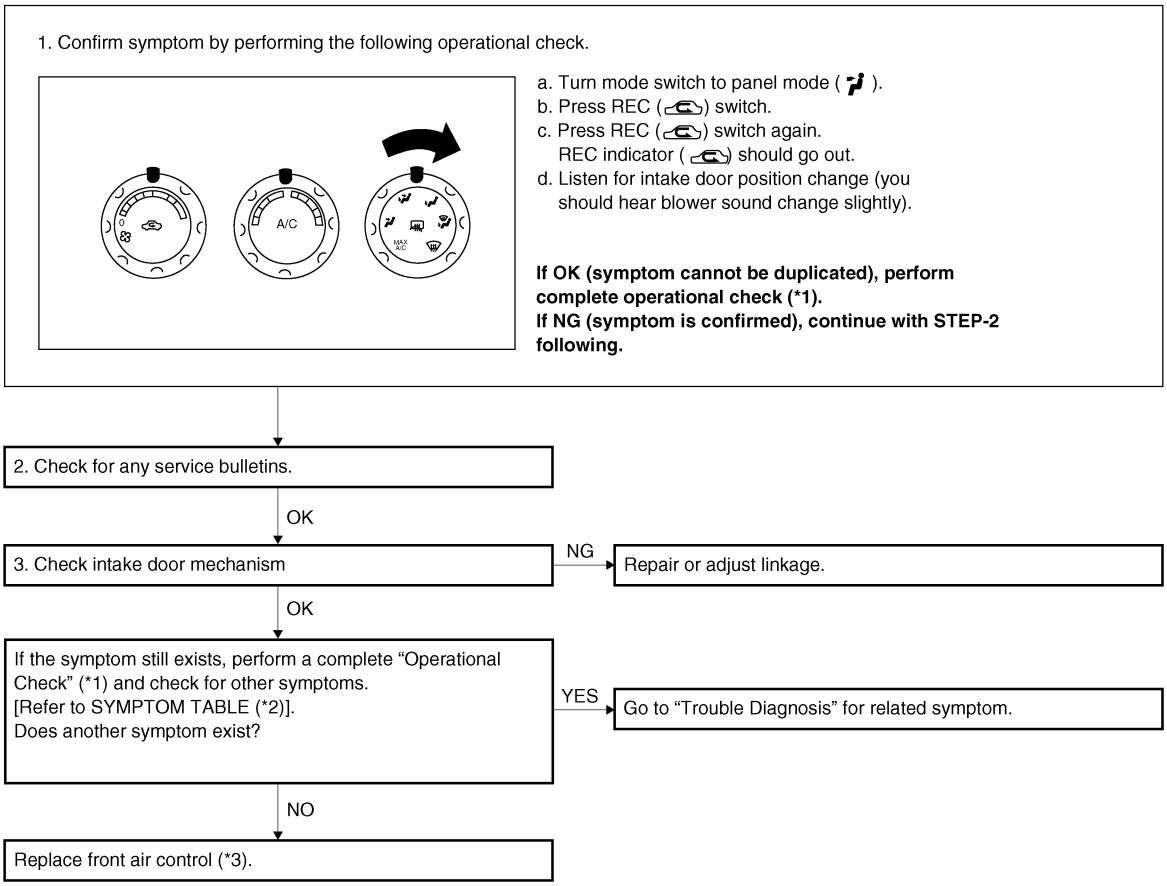

WJIA1928E

*1 MTC-46, "Operational Check" *2 MTC-34, "SYMPTOM TABLE" *3 MTC-95, "CONTROL UNIT"

SYSTEM DESCRIPTION

Component Parts

Intake door control system components are:

- Front air control
- Intake door motor

System Operation

The intake door control determines the intake door positions based on the position of the recirculation switch. When the recirculation switch is depressed the intake door motor rotates closing off the fresh air inlet and recirculating the cabin air. If the recirculation switch is depressed again, the intake door motor rotates in the opposite direction, again allowing fresh air into the cabin.

Intake Doors Control Specification

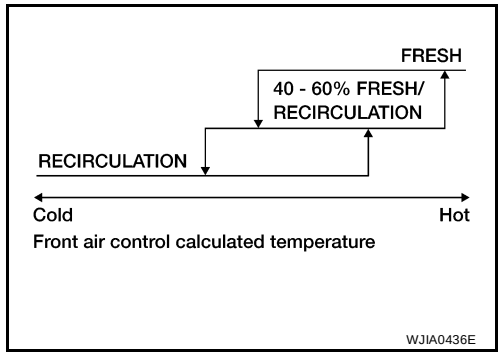

COMPONENT DESCRIPTION

Intake door motor

The intake door motor is attached to the intake unit. It rotates so that air is drawn from inlets set by the front air control. Motor rotation is conveyed to a lever which activates the intake door.

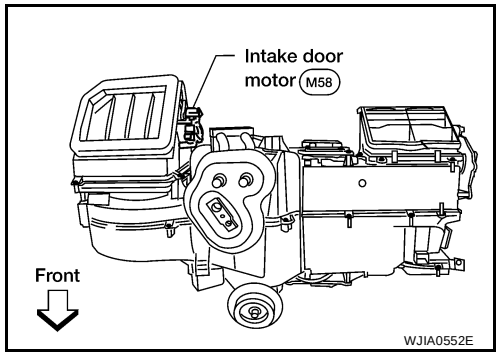

DIAGNOSTIC PROCEDURE FOR INTAKE DOOR MOTOR

1. CHECK FRONT AIR CONTROL FOR POWER AND GROUND

1. Turn ignition switch ON.
2. Check voltage between front air control harness connector M49 terminal 7 and terminal 8 while placing the HVAC system into the front air control motor drive test.

   NOTE:
   To enter the front air control motor drive test, press and hold all three HVAC control buttons for three seconds until all the lights come on. Then press the REC ( ) button.

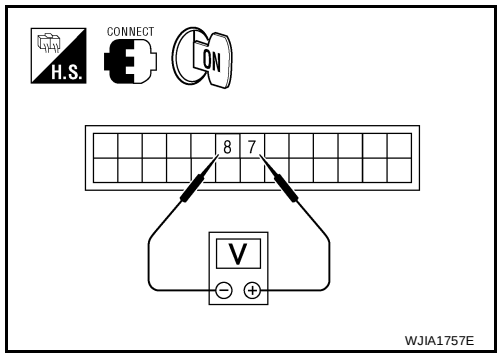

Connector	Terminals		Condition	Voltage (Approx.)
	(+)	(-)		
Front air control: M49	7	8	Front air control motor drive test	Battery voltage

OK or NG

OK >> GO TO 3.
NG >> GO TO 2.

2. CHECK INTAKE DOOR MOTOR CIRCUITS FOR SHORT TO GROUND

1. Turn ignition switch OFF.
2. Disconnect the front air control harness connector.
3. Check continuity between front air control harness connector M49 terminal 7, 8 and ground.

   7 - Ground : Continuity should not exist.
   8 - Ground : Continuity should not exist.

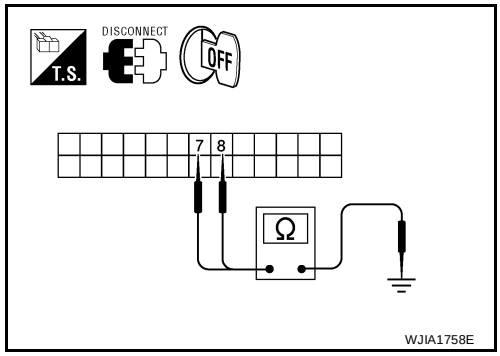

OK or NG

OK >> Replace front air control. Refer to MTC-95, "Removal and Installation" .
NG >> Repair or replace harness as necessary.

3. CHECK FRONT AIR CONTROL FOR GROUND AND POWER

1. Turn ignition switch OFF.
2. Check voltage between front air control harness connector M49 terminal 7 and terminal 8 while placing the HVAC system into front air control motor drive test.

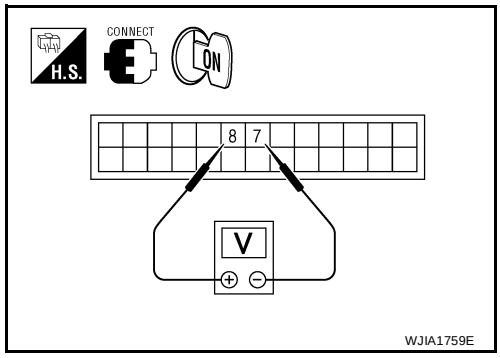

Connector	Terminals		Condition	Voltage (Approx.)
	(+)	(-)		
Front air control: M49	8	7	Front air control motor drive test	Battery voltage

OK or NG

OK >> GO TO 4.
NG >> Replace front air control. Refer to MTC-95, "Removal and Installation" .

4. CHECK INTAKE DOOR MOTOR AND CIRCUITS FOR OPEN

1. Turn ignition switch OFF.
2. Disconnect the front air control harness connector.
3. Check continuity between front air control harness connector M49 terminal 7 and terminal 8.

Continuity should exist.

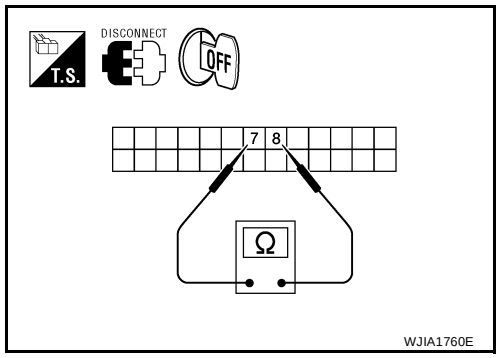

OK or NG

OK >> Replace intake door motor. Refer to MTC-105, "INTAKE DOOR MOTOR" .

NG >> GO TO 5.

5. CHECK INTAKE DOOR MOTOR CIRCUITS FOR OPEN

1. Disconnect the intake door motor harness connector.
2. Check continuity between front air control harness connector M49 terminal 7, 8 and the intake door motor harness connector terminal 1, 6.

1 - 7 : Continuity should exist.

6 - 8 : Continuity should exist.

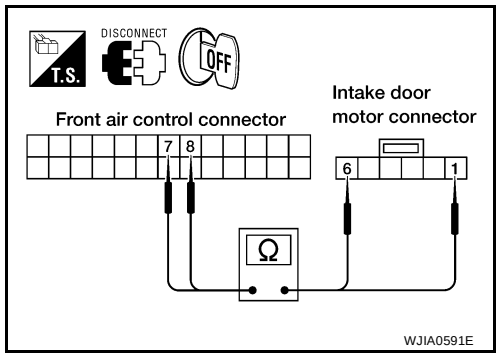

OK or NG

OK >> Replace intake door motor. Refer to MTC-105, "INTAKE DOOR MOTOR" .

NG >> Repair or replace harness as necessary.

Defroster Door Motor Circuit

EJS003U9

SYMPTOM:

- Defroster door does not change.
- Defroster door motor does not operate normally.

INSPECTION FLOW

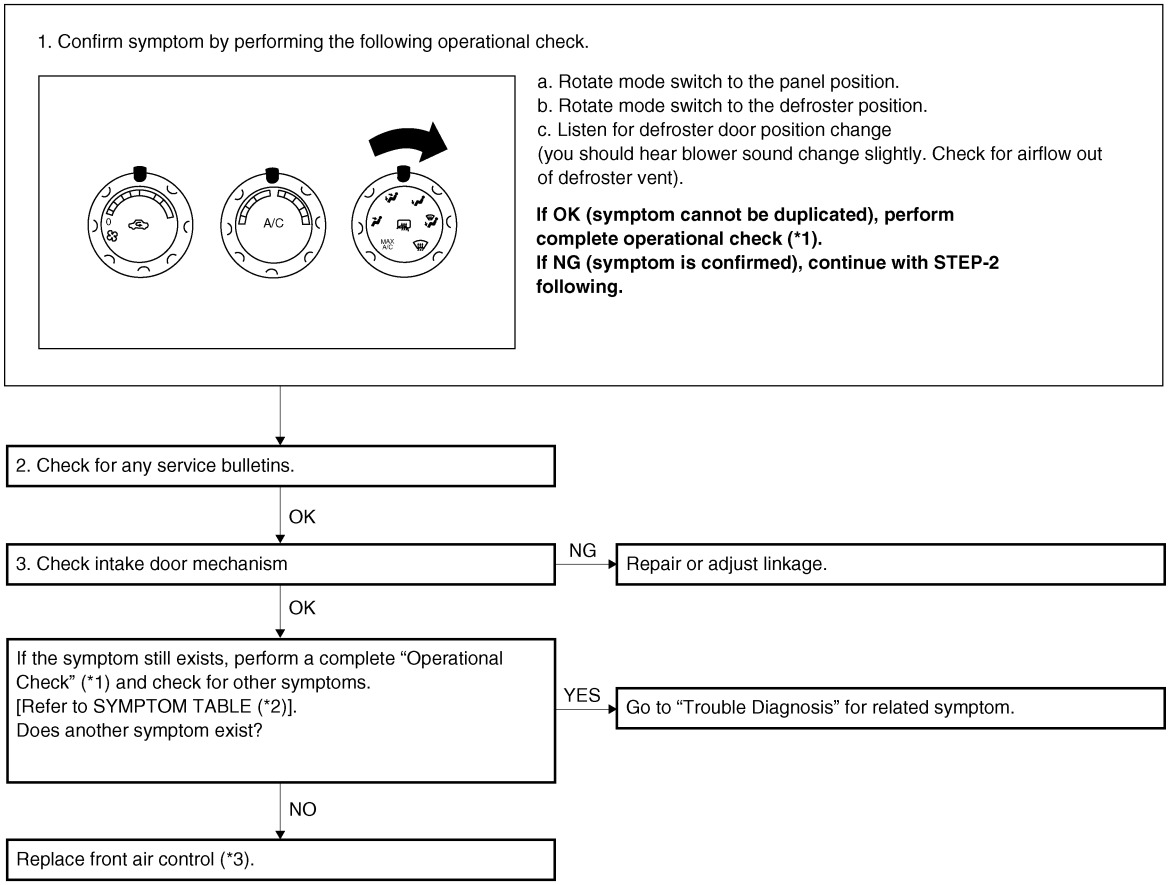

WJIA1929E

*1 MTC-46, "Operational Check" *2 MTC-34, "SYMPTOM TABLE" *3 MTC-95, "CONTROL UNIT"

SYSTEM DESCRIPTION

Component Parts

Defroster door control system components are:

- Front air control
- Defroster door motor
- PBR (built into defroster door motor)

System Operation

The front air control determines defroster door position based on the position of the mode switch. When the mode switch is in the defroster position, the defroster door motor rotates directing air to the defroster ducts. When any mode other than defroster is selected, the defroster motor rotates in the opposite direction closing off air flow to the defroster ducts.

COMPONENT DESCRIPTION

Defroster door motor

The defroster door motor is attached to the front heater & cooling unit assembly. The front air control sends a voltage to rotate the defroster door directing the air flow either to the defroster ducts, or to the floor ducts, depending on which way the voltage and ground are applied to the motor leads. Motor rotation is conveyed to a lever which activates the defroster door.

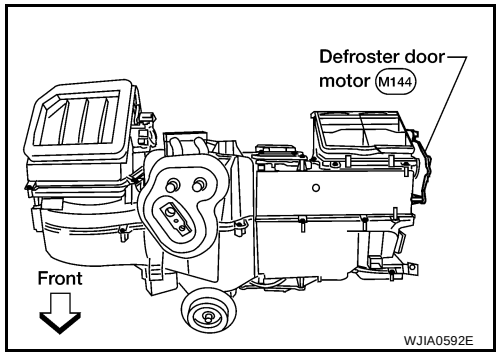

DIAGNOSTIC PROCEDURE FOR DEFROSTER DOOR MOTOR

1. CHECK FRONT AIR CONTROL FOR POWER AND GROUND

1. Turn ignition switch ON.
2. Press the defroster switch ( ).
3. Check voltage between front air control harness connector M49 terminal 20 and terminal 19 and press the defroster switch ( ) again.

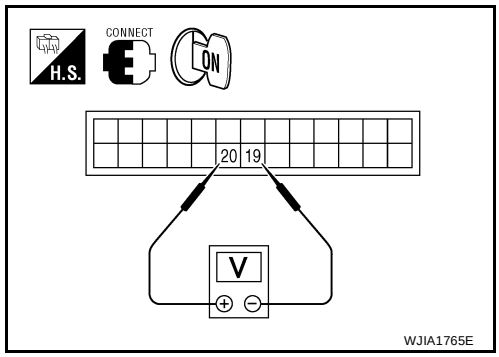

Connector	Terminals		Condition	Voltage (Approx.)
	(+)	(-)		
Front air control: M49	20	19	Press defroster switch	Battery voltage

OK or NG

OK >> GO TO 3.
NG >> GO TO 2.

2. CHECK DEFROSTER DOOR MOTOR CIRCUITS FOR SHORT TO GROUND

1. Turn ignition switch OFF.
2. Disconnect the front air control harness connector.
3. Check continuity between front air control harness connector M49 terminal 19, 20 and ground.

19 - Ground : Continuity should not exist.
20 - Ground : Continuity should not exist.

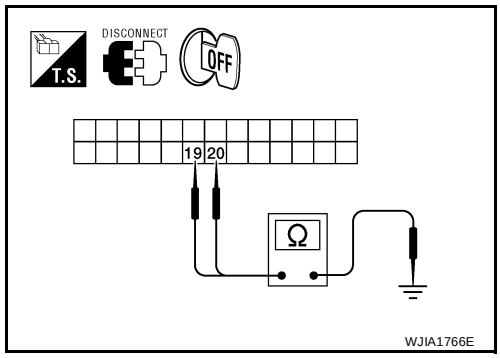

OK or NG

OK >> Replace front air control. Refer to MTC-95, "REMOVAL" .

NG >> Repair or replace harness as necessary.

3. CHECK FRONT AIR CONTROL FOR GROUND AND POWER

1. Press the defroster switch ( ).
2. Check voltage between front air control harness connector M49 terminal 19 and terminal 20 and press the defroster switch ( ) again.

Connector	Terminals		Condition	Voltage (Approx.)
	(+)	(-)		
Front air control: M49	19	20	Press defroster switch	Battery voltage

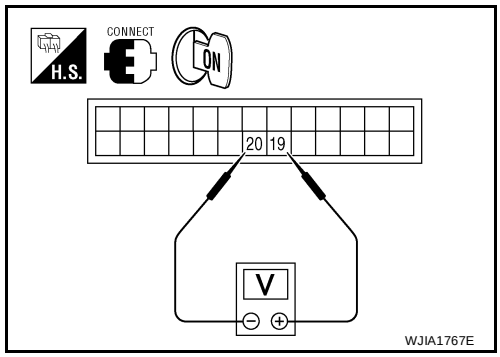

OK or NG

OK >> GO TO 4.

NG >> Replace front air control. Refer to MTC-95, "REMOVAL" .

4. CHECK DEFROSTER DOOR MOTOR AND CIRCUITS FOR OPEN

1. Turn ignition switch OFF.
2. Disconnect the front air control harness connector.
3. Check continuity between front air control harness connector M49 terminal 19 and terminal 20.

Continuity should exist.

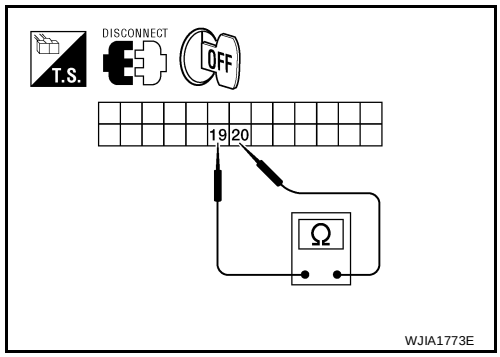

OK or NG6

OK >> GO TO 6.

NG >> GO TO 5.

5. CHECK DEFROSTER DOOR MOTOR CIRCUITS FOR OPEN

1. Disconnect the defroster door motor harness connector.
2. Check continuity between front air control harness connector M49 terminal 19, 20 and the defroster door motor harness connector terminal 1, 6.

19 - 1 : Continuity should exist.
20 - 6 : Continuity should exist.

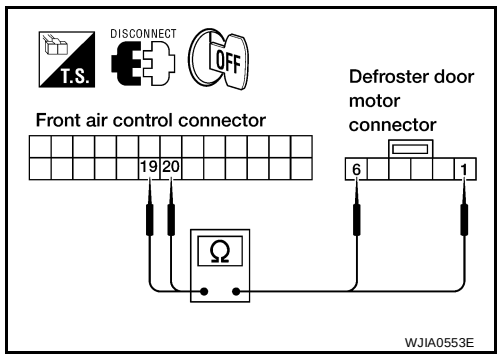

OK or NG

OK >> Replace defroster door motor. Refer to MTC-104, "DEFROSTER DOOR MOTOR" .

NG >> Repair or replace harness as necessary.

6. CHECK FRONT AIR CONTROL FOR PBR POWER AND GROUND

1. Reconnect front air control harness connector.
2. Turn ignition switch ON.
3. Check voltage between front air control harness connector M49 terminal 2 and terminal 15.

Connector	Terminals		Voltage (Approx.)
	(+)	(-)	
Front air control: M49	2	15	5V

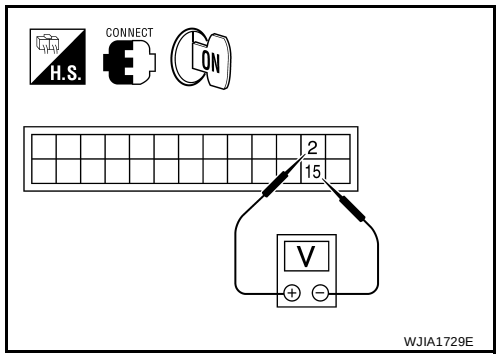

OK or NG

OK >> GO TO 8.
NG >> GO TO 7.

7. CHECK PBR REFERENCE VOLTAGE CIRCUIT FOR SHORT TO GROUND

1. Turn ignition switch OFF.
2. Disconnect the front air control harness connector.
3. Check continuity between front air control harness connector M49 terminal 2 and ground.

Continuity should not exist.

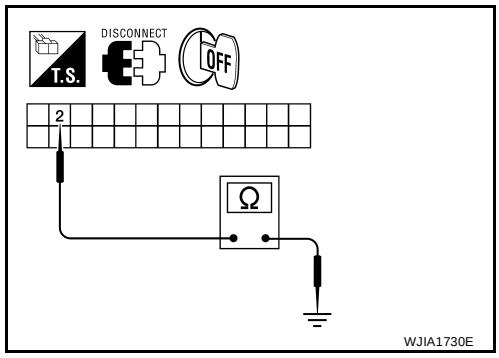

OK or NG

OK >> Replace front air control. Refer to MTC-95, "REMOVAL" .
NG >> Repair or replace harness as necessary.

8. CHECK PBR REFERENCE VOLTAGE AND GROUND CIRCUITS

1. Turn ignition switch OFF.
2. Disconnect the front air control harness connector.
3. Check continuity between front air control harness connector M49 terminal 2 and terminal 15.

Continuity should exist.

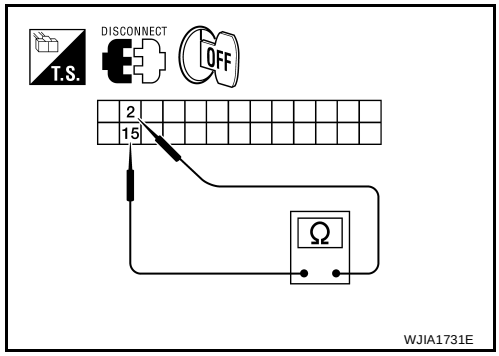

OK or NG

OK >> GO TO 10.
NG >> GO TO 9.

9. CHECK PBR REFERENCE VOLTAGE CIRCUIT FOR OPEN

1. Disconnect the defroster door motor harness connector.
2. Check continuity between defroster door motor harness connector M144 (B) terminal 3, 2 and front air control harness connector M49 (A) terminal 2, 15.

2 - 3 : Continuity should exist.
15 - 2 : Continuity should exist.

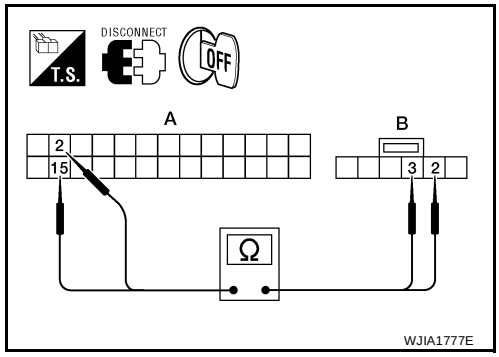

OK or NG

OK >> Replace defroster door motor. Refer to MTC-104, "DEFROSTER DOOR MOTOR" .
NG >> Repair or replace harness as necessary.

10. CHECK PBR FEEDBACK VOLTAGE

1. Reconnect the front air control harness connector.
2. Turn ignition switch ON.
3. Check voltage between front air control harness connector M49 terminal 25 and ground while cycling defroster switch on and off.

Voltage : Approx. 1V - 4.5V

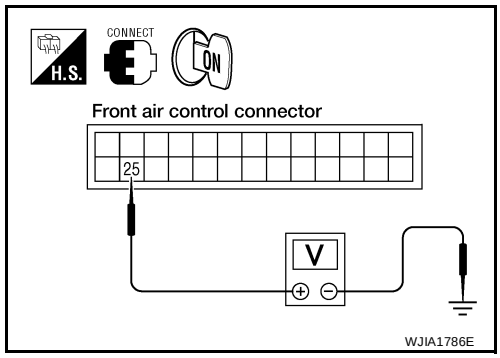

OK or NG

OK >> GO TO 12.
NG >> GO TO 11.

11. CHECK PBR FEEDBACK SIGNAL CIRCUIT FOR SHORT TO GROUND

1. Turn ignition switch OFF.
2. Disconnect front air control harness connector.
3. Check continuity between front air control harness connector M49 terminal 25 and ground.

Continuity should not exist.

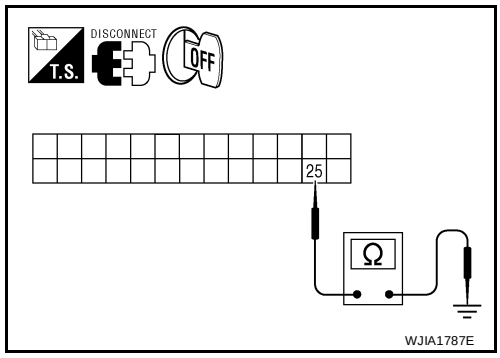

OK or NG

OK >> Replace front air control. Refer to MTC-95, "REMOVAL" .
NG >> Repair or replace harness as necessary.

12. CHECK PBR FEEDBACK CIRCUIT FOR OPEN

1. Turn ignition switch OFF.
2. Disconnect the defroster door motor harness connector and front air control harness connector.
3. Check continuity between defroster door motor harness connector M144 terminal 4 and front air control harness connector M49 terminal 25

Continuity should exist.

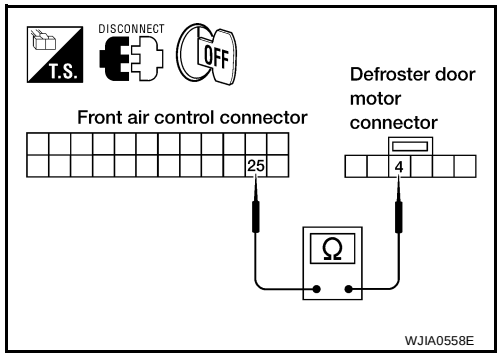

OK or NG

OK >> Replace defroster door motor. Refer to MTC-104, "DEFROSTER DOOR MOTOR" .
NG >> Repair or replace harness as necessary.

Front Blower Motor Circuit

EJS003UA

SYMPTOM:

- Blower motor operation is malfunctioning.

INSPECTION FLOW

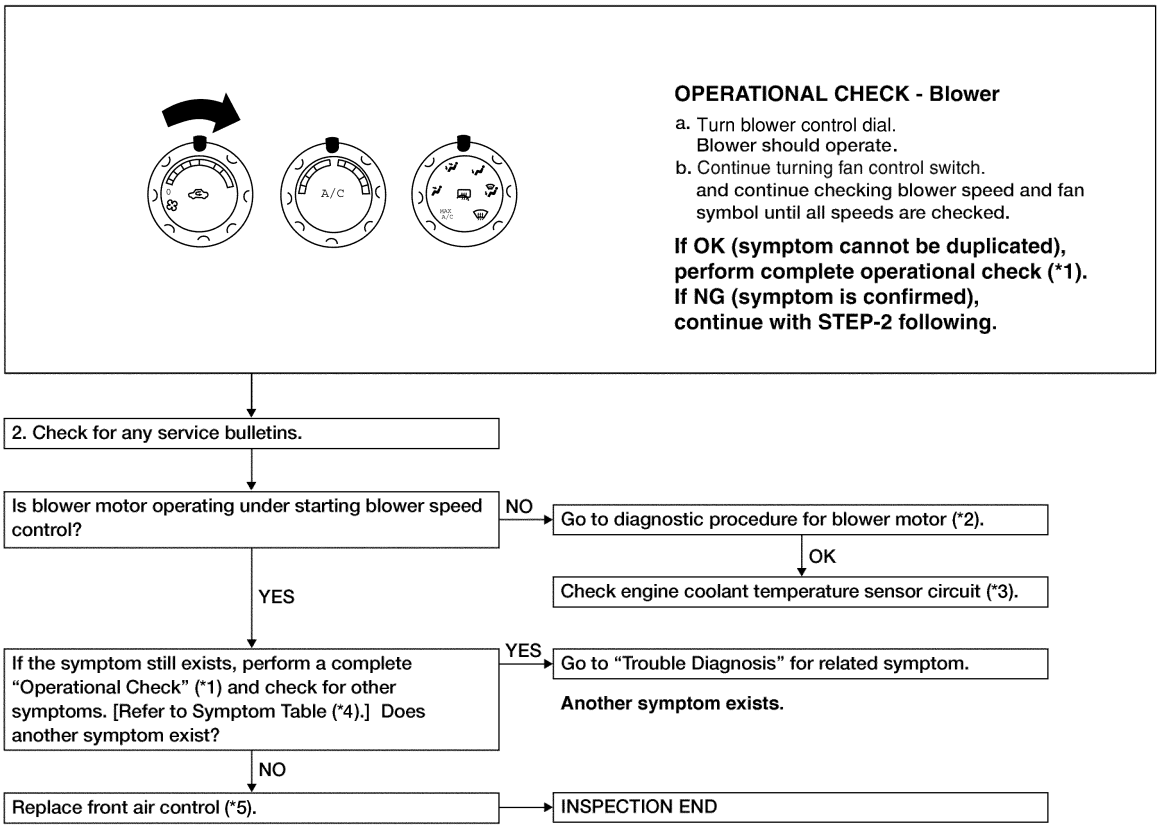

WJIA1930E

*1 MTC-46, "Operational Check"

*2 MTC-72, "DIAGNOSTIC PROCEDURE FOR BLOWER MOTOR"

*3 EC-198, "DTC P0117, P0118 ECT SENSOR"EC-211, "DTC P0125 ECT SENSOR"

*4 MTC-34, "SYMPTOM TABLE"

*5 MTC-95, "CONTROL UNIT"

SYSTEM DESCRIPTION

Component Parts

- Front air control
- Front blower switch
- Variable blower control
- Front blower motor
- Front blower motor relay

System Operation

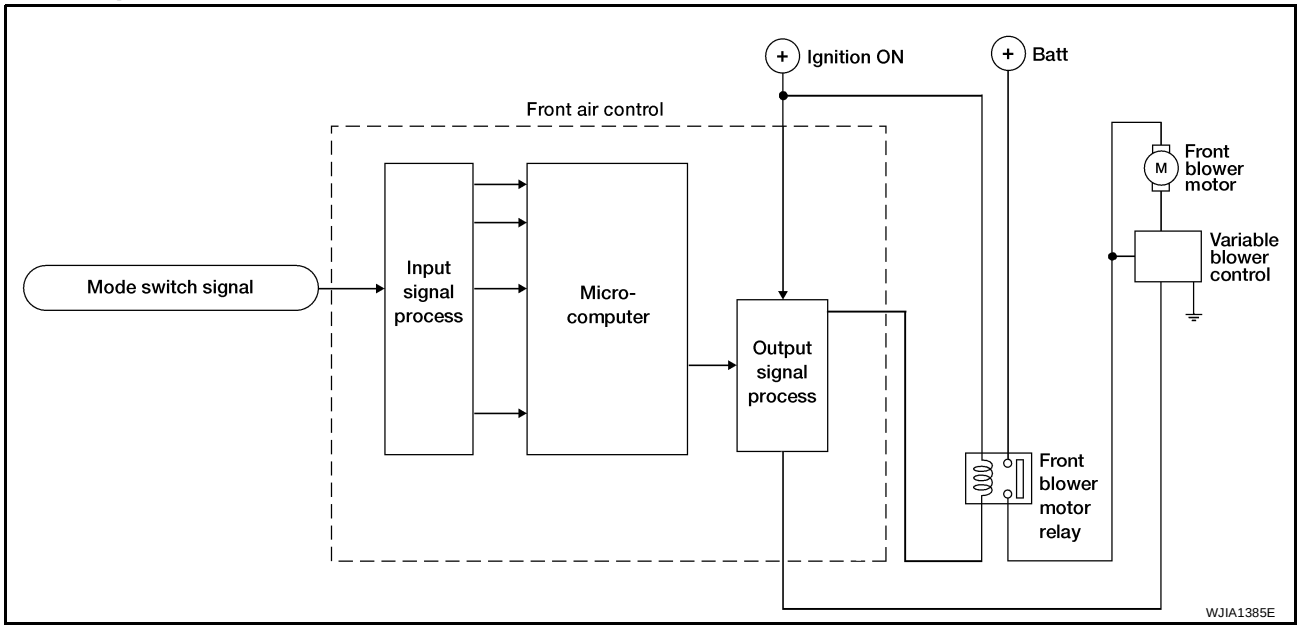

COMPONENT DESCRIPTION

Variable Blower Control

The variable blower control is located on the heater and cooling unit assembly. The variable blower control receives a gate voltage from the front air control to steplessly maintain the blower motor voltage in the 0 to 5 volt range (approx.).

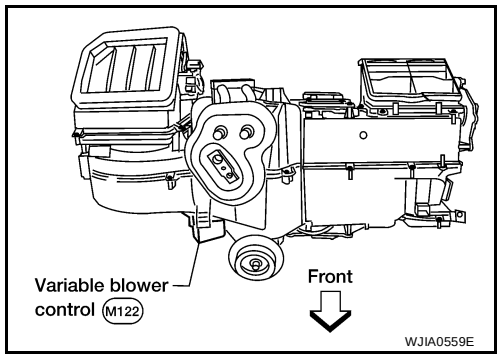

DIAGNOSTIC PROCEDURE FOR BLOWER MOTOR

SYMPTOM: Blower motor operation is malfunctioning.

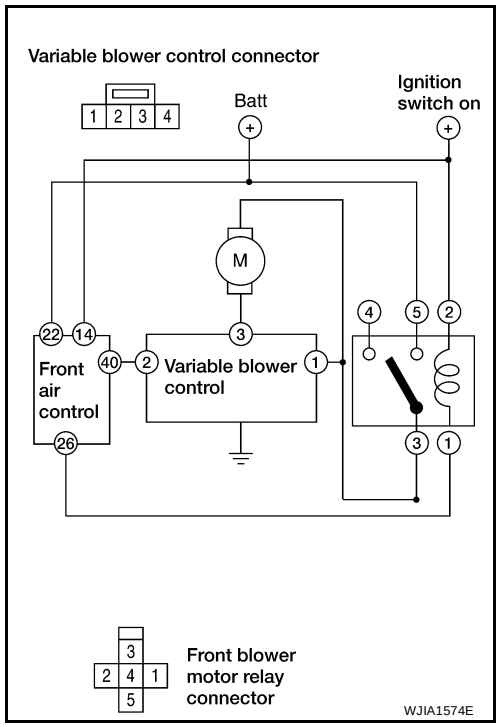

1. CHECK FUSES

Check 20A fuses No. 24 and 27, (located in the fuse and fusible link box). For fuse layout. Refer to PG-81, "FUSE AND FUSIBLE LINK BOX" .

Fuses are good.

OK or NG

OK >> GO TO 2.
NG >> GO TO 10.

2. CHECK FRONT BLOWER MOTOR POWER SUPPLY CIRCUIT

1. Turn ignition switch OFF.
2. Disconnect front blower motor connector.
3. Turn ignition switch ON.
4. Press the mode switch to select any mode except off.
5. Turn the front blower control dial to high.
6. Check voltage between front blower motor harness connector M62 terminal 2 and ground.

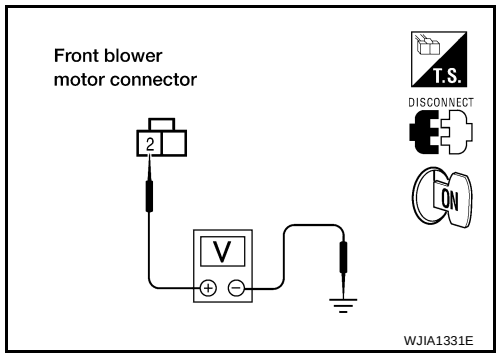

2 - Ground : Battery voltage

OK or NG

OK >> GO TO 12.
NG >> GO TO 3.

3. CHECK FRONT BLOWER MOTOR RELAY (SWITCH SIDE) POWER SUPPLY CIRCUIT

1. Turn ignition switch OFF.
2. Disconnect front blower motor relay.
3. Turn ignition switch ON.
4. Check voltage between front blower motor relay harness connector M107 terminals 5 and ground.

5 - Ground **: Battery voltage**

OK or NG

OK >> GO TO 4.
NG >> Repair harness or connector as necessary.

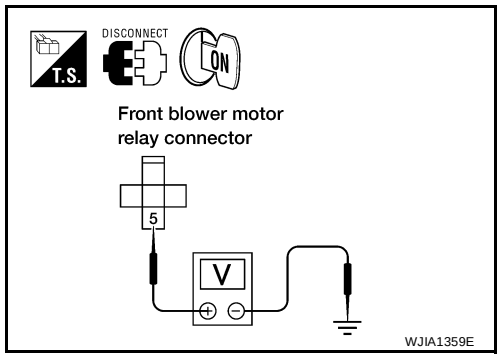

4. CHECK FRONT BLOWER MOTOR RELAY

Turn ignition switch OFF.
Refer to MTC-76, "Front Blower Motor Relay" .

OK or NG

OK >> GO TO 5.
NG >> Replace front blower motor relay.

5. CHECK FRONT BLOWER MOTOR RELAY (SWITCH SIDE) CIRCUIT FOR OPEN

Check continuity between front blower motor relay harness connector M107 terminal 3 and front blower motor harness connector M62 terminal 2.

3 - 2 **: Continuity should exist.**

OK or NG

OK >> GO TO 6.
NG >> Repair harness or connector as necessary.

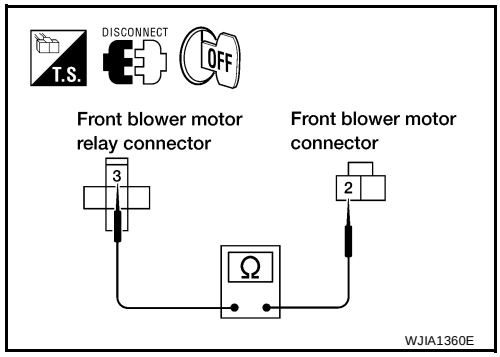

6. CHECK VARIABLE BLOWER CONTROL POWER SUPPLY CIRCUIT FOR OPEN

1. Disconnect variable blower control harness connector.
2. Check continuity between front blower motor relay harness connector M107 terminals 3 and variable blower control harness connector M122 terminal 1.

3 - 1 **: Continuity should exist.**

OK or NG

OK >> GO TO 7.
NG >> Repair harness or connector as necessary.

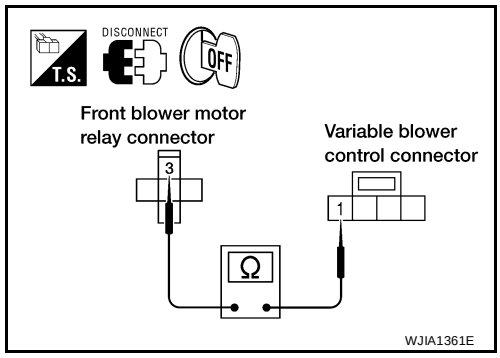

7. CHECK VARIABLE BLOWER CONTROL SIGNAL CIRCUIT

1. Disconnect front air control connector.
2. Check continuity between front air control harness connector M49 terminal 40 and variable blower control harness connector M122 terminal 2.

40 - 2 **: Continuity should exist.**

OK or NG

OK >> GO TO 8.
NG >> Repair harness or connector as necessary.

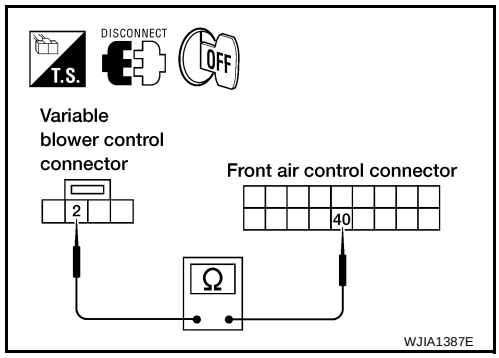

8. CHECK FRONT BLOWER MOTOR RELAY (COIL SIDE) POWER SUPPLY

1. Turn ignition switch ON.
2. Check voltage between front blower motor relay harness connector M107 terminal 2 and ground.

2 - Ground **: Battery voltage**

OK or NG

OK >> GO TO 9.
NG >> Repair harness or connector as necessary.

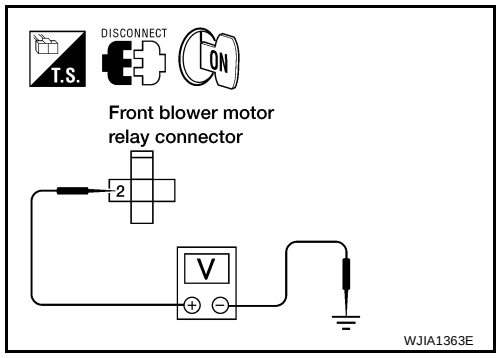

9. CHECK FRONT BLOWER MOTOR RELAY (COIL SIDE) GROUND CIRCUIT

1. Turn ignition switch OFF.
2. Check continuity between front blower motor relay connector M107 terminal 1 and front air control harness connector M49 terminal 26.

1 - 26 **: Continuity should exist.**

OK or NG

OK >> Replace front air control. Refer to MTC-95, "CONTROL UNIT" .
NG >> Repair harness or connector as necessary.

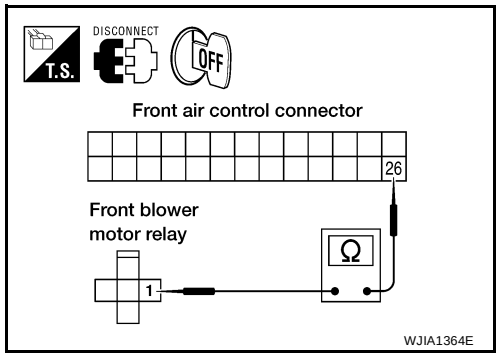

10. REPLACE FUSES

1. Replace fuses.
2. Activate the front blower motor.
3. Do fuses blow?

YES or NO

YES >> GO TO 11.
NO >> Inspection End.

11. CHECK FRONT BLOWER MOTOR POWER SUPPLY CIRCUIT FOR SHORT

1. Turn ignition switch OFF.
2. Disconnect front blower motor connector and variable blower control connector.
3. Check continuity between variable blower control harness connector M122 terminal 1 and ground.

1 - Ground. : Continuity should not exist.

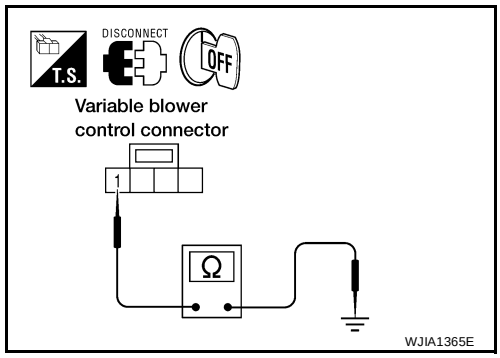

OK or NG

OK >> GO TO 12.
NG >> Repair harness or connector as necessary.

12. CHECK VARIABLE BLOWER CONTROL SIGNAL CIRCUIT

1. Disconnect front air control connector.
2. Check continuity between front air control harness connector M49 terminal 40 and variable blower control harness connector M122 terminal 2.

40 - 2 : Continuity should exist.

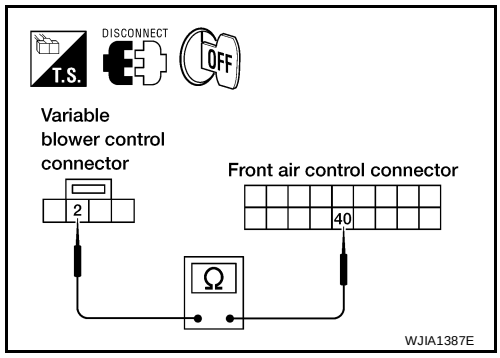

OK or NG

OK >> GO TO 13.
NG >> Repair harness or connector as necessary.

13. CHECK FRONT BLOWER MOTOR

Check front blower motor. Refer to MTC-70, "Front Blower Motor Circuit" .

OK or NG

OK >> GO TO 14.
NG >> Replace front blower motor. Refer to MTC-97, "BLOWER MOTOR" .

14. CHECK BLOWER MOTOR GROUND CIRCUIT

Check continuity between front blower motor harness connector M62 terminal 1 and variable blower control harness connector M122 terminal 3.

1 - 3 : Continuity should exist.

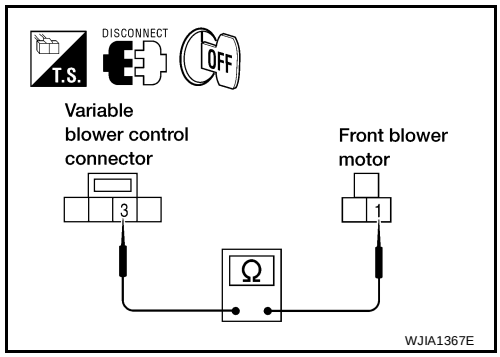

OK or NG

OK >> GO TO 15.
NG >> Repair harness or connector as necessary.

15. CHECK VARIABLE BLOWER CONTROL GROUND CIRCUIT

Check continuity between variable blower control harness connector M122 terminal 4 and ground.

4 - ground : Continuity should exist.

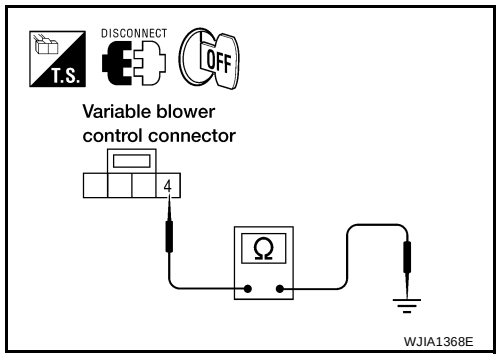

OK or NG

OK >> Replace variable blower control. Refer to MTC-108, "VARIABLE BLOWER CONTROL" .

NG >> Repair harness or connector as necessary.

COMPONENT INSPECTION

Front Blower Motor Relay

Check continuity between terminals 3 and 5 by supplying 12 volts and ground to coil side terminals of relay.

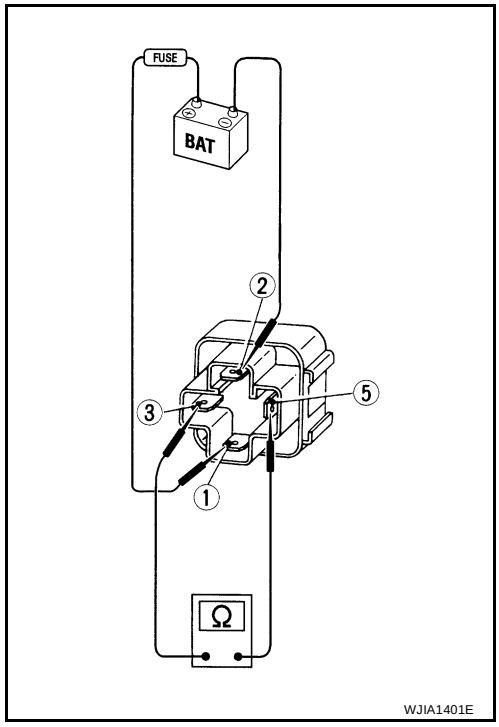

Front Blower Motor

Confirm smooth rotation of the blower motor.

- Ensure that there are no foreign particles inside the blower unit.
- Apply 12 volts to terminal 2 and ground to terminal 1 and verify that the motor operates freely and quietly.

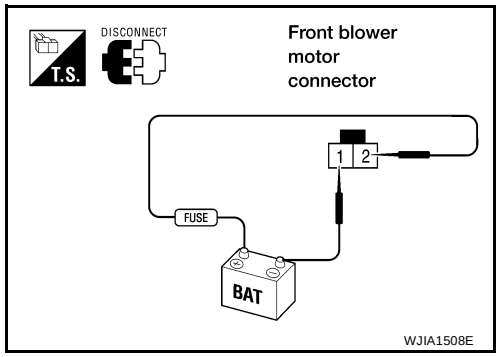

Magnet Clutch Circuit

EJS003UD

SYMPTOM: Magnet clutch does not engage.

INSPECTION FLOW

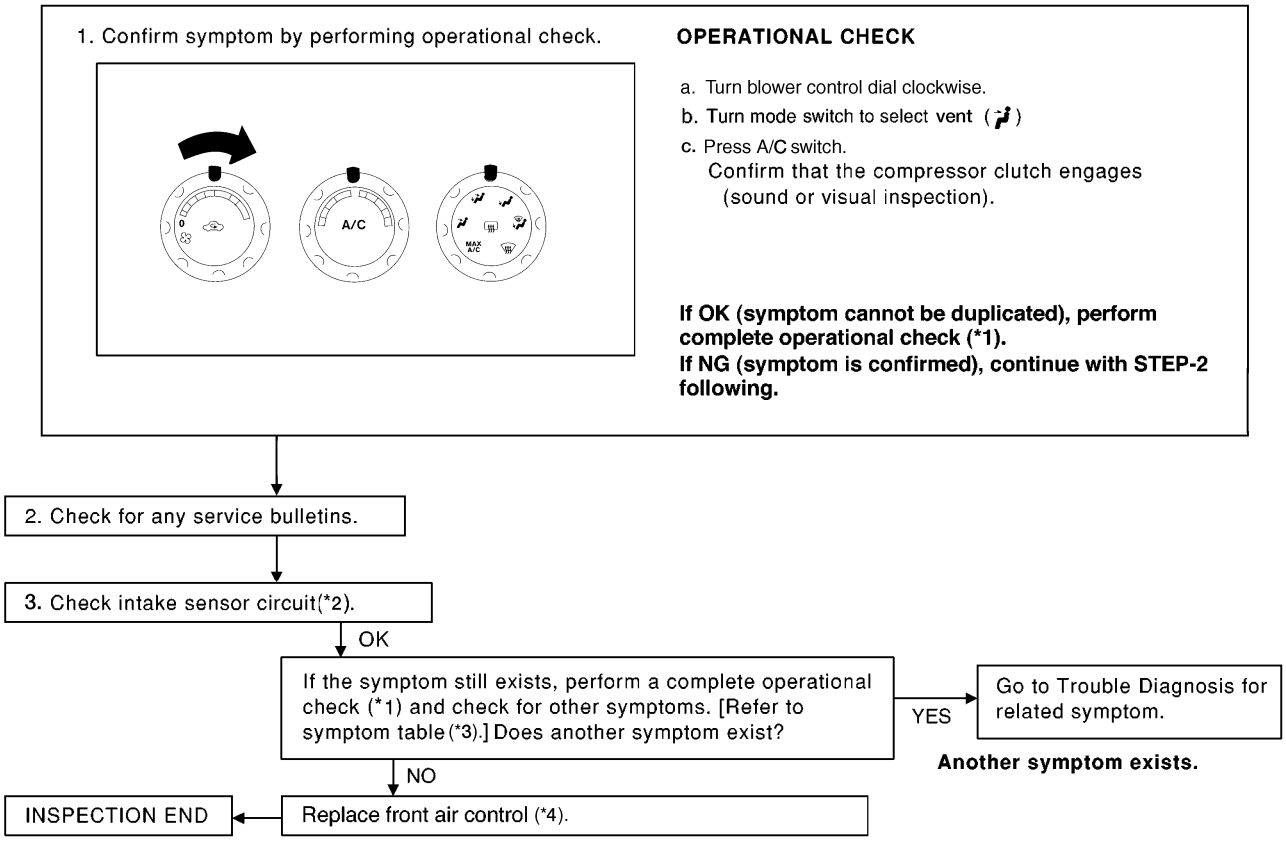

WJIA1931E

*1 MTC-46, "Operational Check" *2 MTC-61, "Intake Door Motor Circuit" *3 MTC-34, "SYMPTOM TABLE"
*4 MTC-95, "CONTROL UNIT"

SYSTEM DESCRIPTION

The front air control controls compressor operation based on ambient and intake temperature and a signal from ECM.

Low Temperature Protection Control

The front air control will turn the compressor ON or OFF as determined by a signal detected by the intake sensor.
When intake air temperature is higher than the preset value, the compressor turns ON. The compressor turns OFF when intake air temperature is lower than the preset value.

DIAGNOSTIC PROCEDURE FOR MAGNET CLUTCH

SYMPTOM: Magnet clutch does not engage when A/C switch is ON.

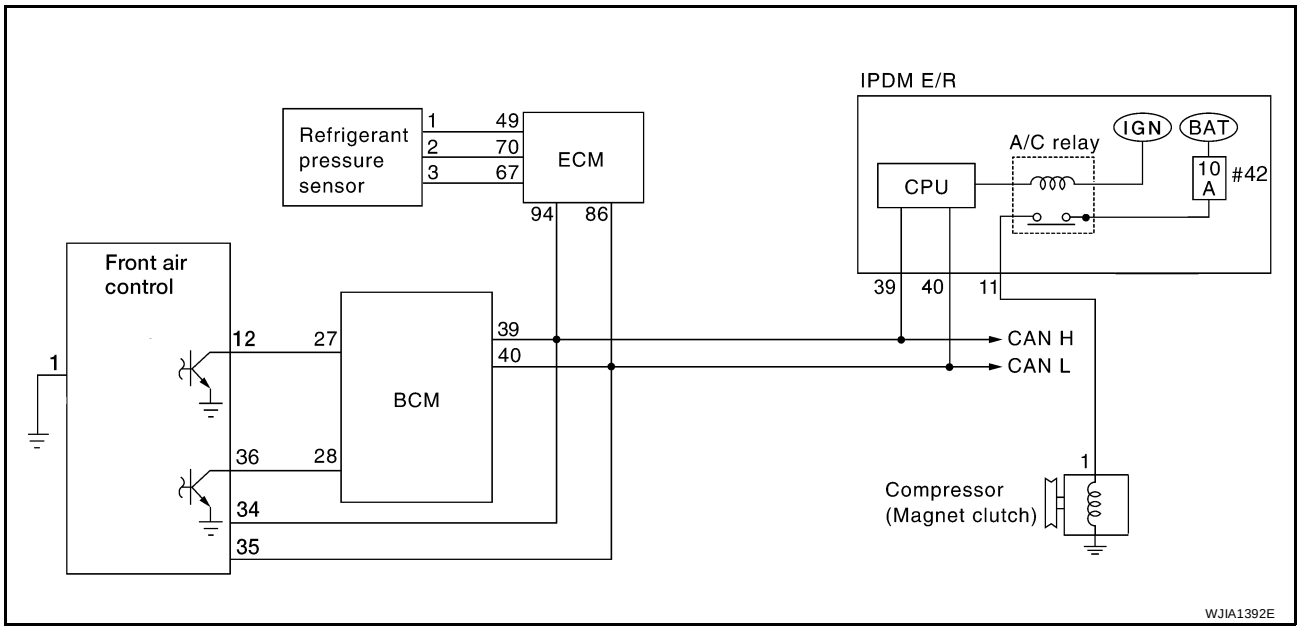

1. CHECK INTAKE SENSOR CIRCUITS

Check intake sensor. Refer to MTC-93, "Intake Sensor Circuit" .

OK or NG

OK >> GO TO 2.
NG >> Replace intake sensor. Refer to MTC-96, "INTAKE SENSOR" .

2. PERFORM AUTO ACTIVE TEST

Refer to PG-24, "Auto Active Test" .
Does magnet clutch operate?

YES or NO

YES >> ● WITH CONSULT-II
GO TO 5.
● WITHOUT CONSULT-II
GO TO 6.

NO >> Check 10A fuse (No. 42, located in IPDM E/R), and GO TO 3.

3. CHECK CIRCUIT CONTINUITY BETWEEN IPDM E/R AND COMPRESSOR

1. Turn ignition switch OFF.
2. Disconnect IPDM E/R connector and A/C compressor (magnet clutch) connector.
3. Check continuity between IPDM E/R harness connector E119 terminal 11 and A/C compressor harness connector F3 terminal 1.

11 – 1 **: Continuity should exist.**

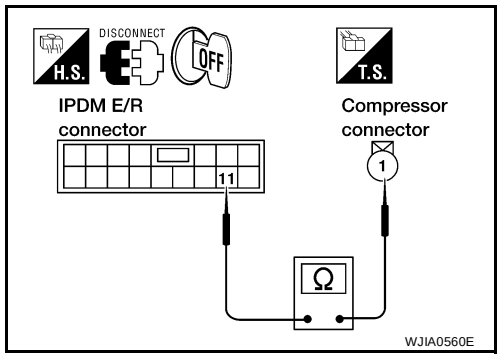

OK or NG

OK >> GO TO 4.
NG >> Repair harness or connector as necessary.

4. CHECK MAGNET CLUTCH CIRCUIT

Check for operation sound when applying battery voltage to terminal 1 of A/C compressor.

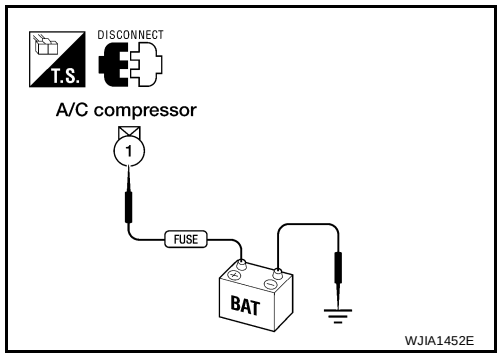

OK or NG

OK >> Replace IPDM E/R. Refer to PG-31, "Removal and Installation of IPDM E/R" .
NG >> Replace magnet clutch. Refer to MTC-116, "Removal and Installation for Compressor Clutch" .

5. CHECK BCM INPUT (COMPRESSOR ON) SIGNAL

Check compressor ON/OFF signal. Refer to MTC-32, "CONSULT-II Function (BCM)" .

A/C SW ON **: COMP ON SIG ON**
A/C SW OFF **: COMP ON SIG OFF**

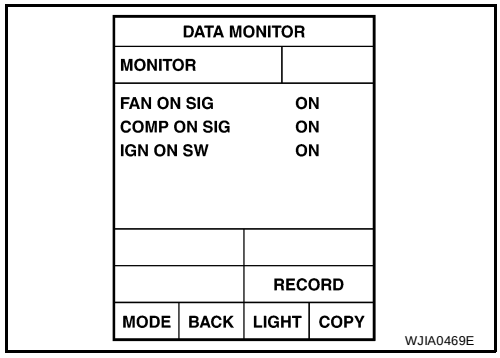

OK or NG

OK >> GO TO 8.
NG >> GO TO 6.

6. CHECK CIRCUIT CONTINUITY BETWEEN BCM AND FRONT AIR CONTROL

1. Turn ignition switch OFF.
2. Disconnect BCM connector and front air control connector.
3. Check continuity between BCM harness connector M18 terminal 27 and front air control harness connector M49 terminal 12.

27 - 12 **Continuity should exist.**

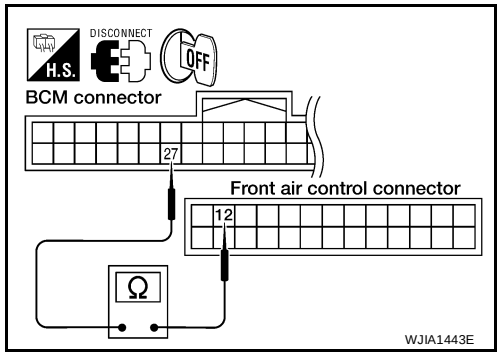

OK or NG

OK >> GO TO 7.
NG >> Repair harness or connector as necessary.

7. CHECK VOLTAGE FOR FRONT AIR CONTROL (COMPRESSOR ON SIGNAL)

1. Reconnect BCM connector and front air control connector.
2. Turn ignition switch ON.
3. Check voltage between front air control harness connector M49 terminal 12 and ground.

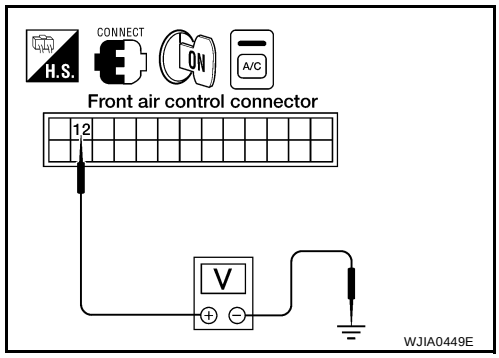

Terminals			Condition	Voltage
(+)		(-)		
Front air control connector	Terminal No.			
M49	12	Ground	A/C switch: ON	Approx. 0V
			A/C switch: OFF	Approx. 5V

OK or NG

OK >> GO TO 8.

NG-1 >> If the voltage is approx. 5V when A/C switch is ON, replace front air control. Refer to MTC-95, "CONTROL UNIT" .

NG-2 >> If the voltage is approx. 0V when A/C switch is OFF, replace BCM. Refer to BCS-20, "BCM" .

8. CHECK REFRIGERANT PRESSURE SENSOR

WITH CONSULT-II

1. Start engine.
2. Check voltage of refrigerant pressure sensor. Refer to MTC-29, "CONSULT-II Function (HVAC)" .

WITHOUT CONSULT-II

1. Start engine.
2. Check voltage between ECM harness connector F54 terminal 70 and ground.

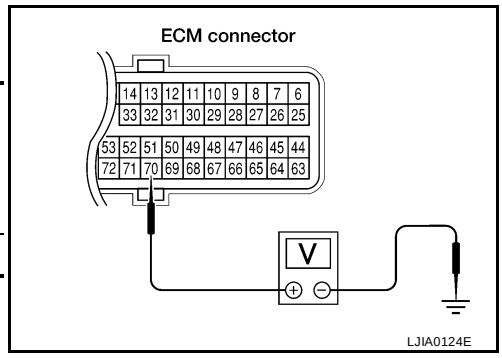

Terminals			Condition	Voltage
(+)		(-)		
ECM connector	Terminal No.			
F54	70	Ground	A/C switch: ON	Approx. 0.36 - 3.88V

OK or NG

OK >> ● WITH CONSULT-II
GO TO 9.
● WITHOUT CONSULT-II
GO TO 10.

NG >> Refer to EC-623, "REFRIGERANT PRESSURE SENSOR" .

9. CHECK BCM INPUT (FAN ON) SIGNAL

Check FAN ON/OFF signal. Refer to MTC-32, "CONSULT-II Function (BCM)" .

FRONT BLOWER CONTROL DIAL ON : **FAN ON SIG ON**

FRONT BLOWER CONTROL DIAL OFF : **FAN ON SIG OFF**

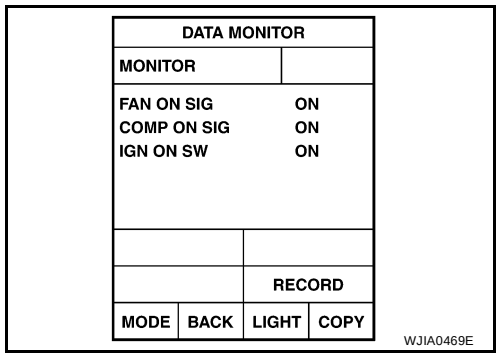

OK or NG

OK >> GO TO 12.

NG >> GO TO 10.

10. CHECK CIRCUIT CONTINUITY BETWEEN BCM AND FRONT AIR CONTROL

1. Turn ignition switch OFF.
2. Disconnect BCM connector and front air control connector.
3. Check continuity between BCM harness connector M18 terminal 28 and front air control harness connector M50 terminal 36.

28 - 36 : Continuity should exist.

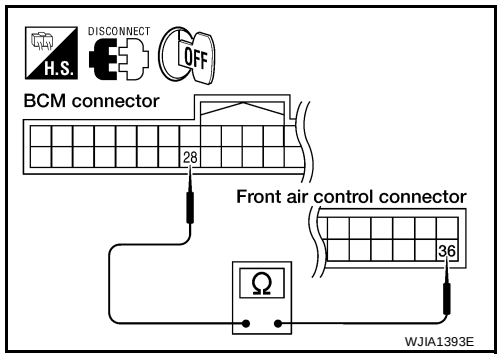

OK or NG

OK >> GO TO 11.
NG >> Repair harness or connector as necessary.

11. CHECK VOLTAGE FOR FRONT AIR CONTROL (FAN ON SIGNAL)

1. Reconnect BCM connector and front air control connector.
2. Turn ignition switch ON.
3. Check voltage between front air control harness connector M49 terminal 36 and ground.

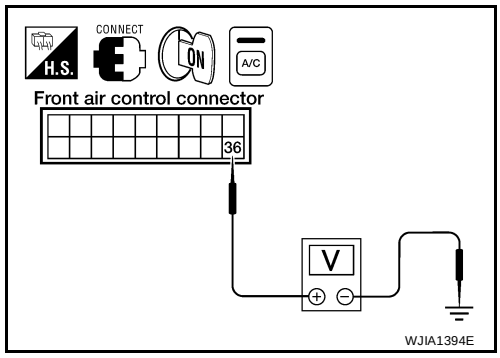

Terminals			Condition	Voltage
(+)		(-)		
Front air control connector	Terminal No.			
M50	36	Ground	A/C switch: ON Blower motor operates	Approx. 0V
			A/C switch: OFF	Approx. 5V

OK or NG

OK >> GO TO 12.
NG-1 >> If the voltage is approx. 5V when blower motor is ON, replace front air control. Refer to MTC-95, "CONTROL UNIT" .
NG-2 >> If the voltage is approx. 0V when blower motor is OFF, replace BCM. Refer to BCS-20, "BCM" .

12. CHECK CAN COMMUNICATION

Check CAN communication. Refer to LAN-25, "CAN COMMUNICATION" .

- BCM – ECM
- ECM – IPDM E/R
- ECM – Front air control

OK or NG

OK >> Inspection End.
NG >> Repair or replace malfunctioning part(s).

Insufficient Cooling

EJS003UE

SYMPTOM: Insufficient cooling

INSPECTION FLOW

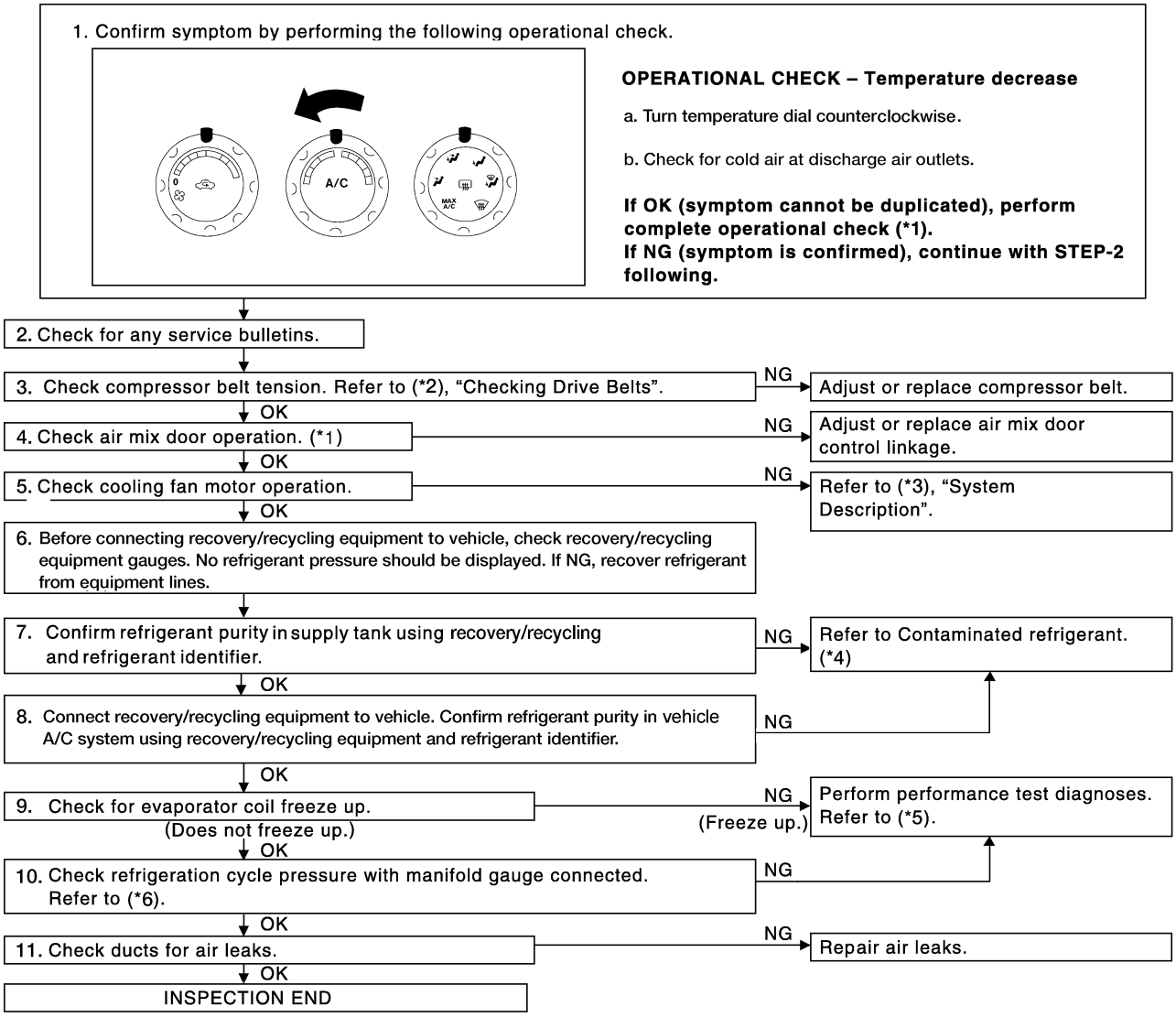

WJIA1932E

*1	MTC-46, "Operational Check"	*2	EM-13, "Checking Drive Belts"	*3	EC-479, "DTC P1217 ENGINE OVER TEMPERATURE"
*4	MTC-4, "Contaminated Refrigerant"	*5	MTC-83, "PERFORMANCE TEST DIAGNOSES"	*6	MTC-85, "Test Reading"

PERFORMANCE TEST DIAGNOSES

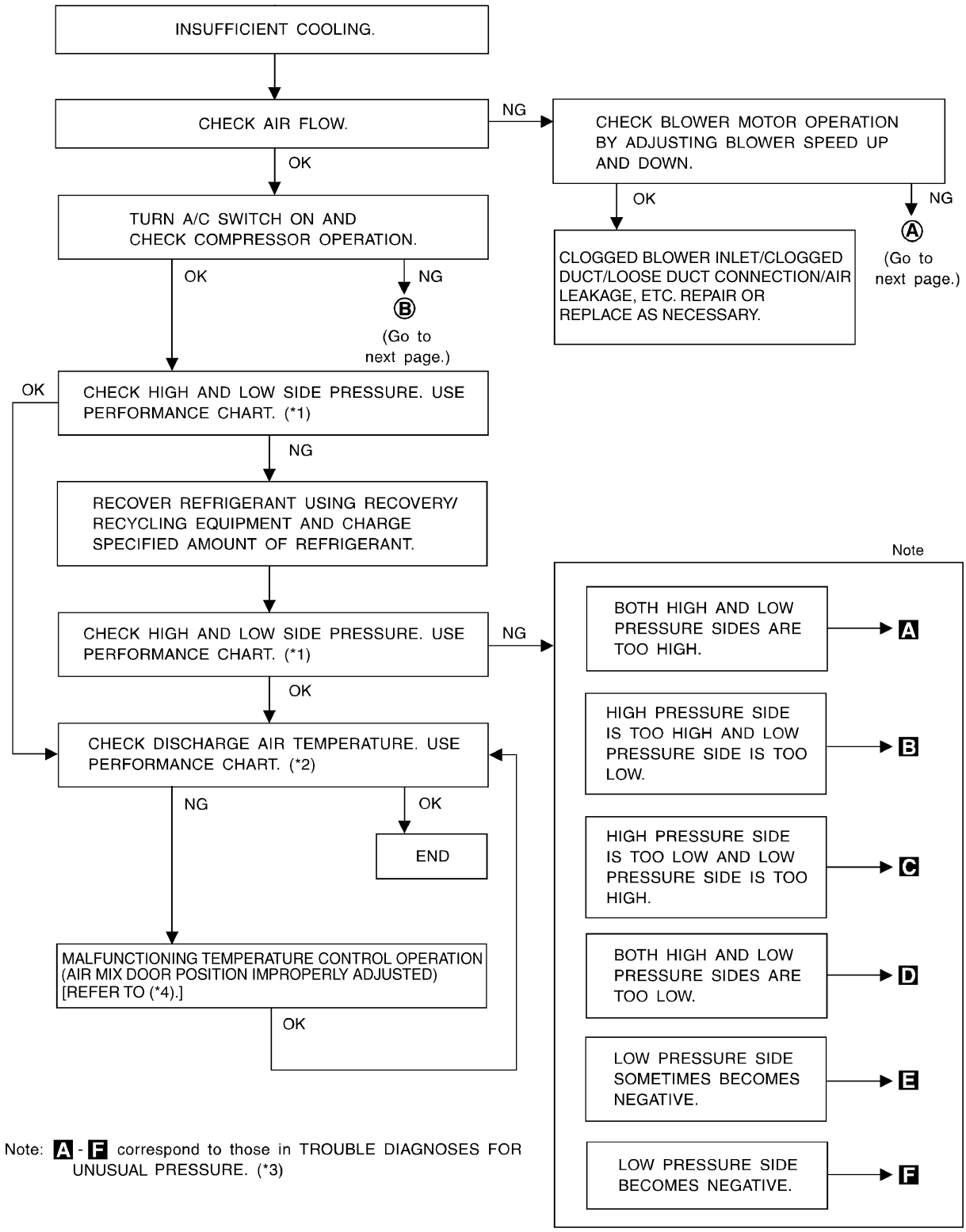

*1 MTC-85, "PERFORMANCE CHART" *2 MTC-85, "PERFORMANCE CHART" *3 MTC-86, "Trouble Diagnoses for Unusual Pressure"

*4 MTC-56, "Air Mix Door Motor Circuit"

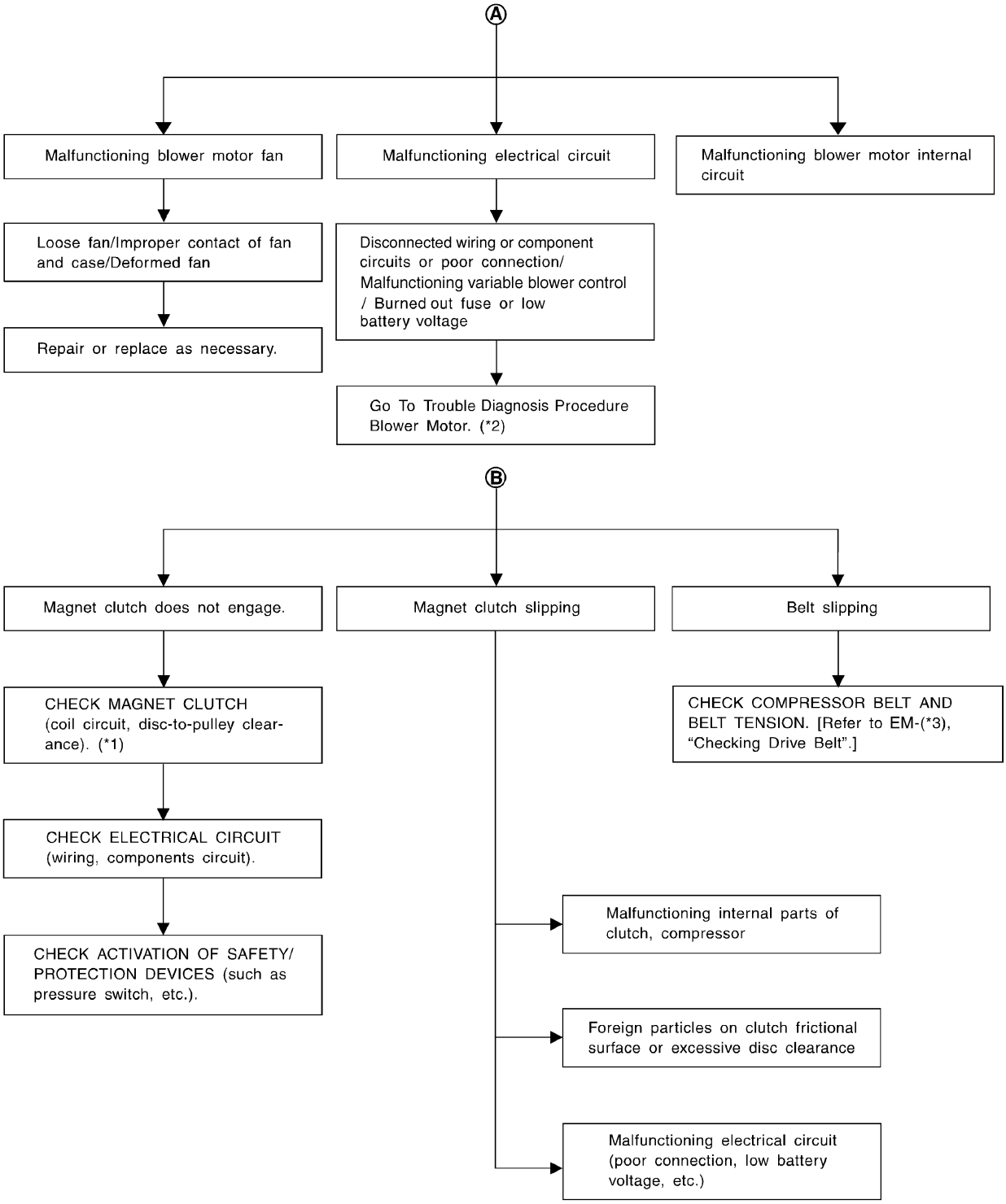

WJIA1371E

*1 MTC-116, "Removal and Installation for Compressor Clutch" *2 MTC-70, "Front Blower Motor Circuit" *3 EM-13, "Checking Drive Belts"

PERFORMANCE CHART

Test Condition

Testing must be performed as follows:

Vehicle location	Indoors or in the shade (in a well-ventilated place)
Doors	Closed
Door window	Open
Hood	Open
TEMP.	Max. COLD
Mode switch	(Ventilation) set
Recirculation (REC) switch	(Recirculation) set
Blower speed	Max. speed set
Engine speed	Idle speed
Operate the air conditioning system for 10 minutes before taking measurements.	

Test Reading

Recirculating-to-discharge Air Temperature Table

Inside air (Recirculating air) at blower assembly inlet		Discharge air temperature at center ventilator °C (°F)
Relative humidity %	Air temperature °C (°F)	
50 - 60	20 (68)	9.9 - 13.9 (50 - 57)
	25 (77)	14.6 - 18.6 (58 - 65)
	30 (86)	16.8 - 21.8 (62 - 71)
	35 (95)	21.1 - 27.1 (70 - 81)
	40 (104)	25.3 - 31.5 (78 - 89)
60 - 70	20 (68)	11.4 - 15.2 (53 - 59)
	25 (77)	15.5 - 20.0 (60 - 68)
	30 (86)	19.9 - 25.0 (68 - 77)
	35 (95)	24.5 - 29.6 (76 - 85)
	40 (104)	28.7 - 34.9 (84 - 95)

Ambient Air Temperature-to-operating Pressure Table

Ambient air		High-pressure (Discharge side) kPa (kg/cm^2 , psi)	Low-pressure (Suction side) kPa (kg/cm^2 , psi)
Relative humidity %	Air temperature °C (°F)		
50 - 70	20 (68)	1020 - 1250 (10.4 - 12.7, 147.9 - 181.3)	160 - 190 (1.63 - 1.94, 23.2 - 27.6)
	25 (77)	1236 - 1510 (12.6 - 15.4, 179.2 - 219)	206 - 245 (2.1 - 2.5, 29.9 - 35.6)
	30 (86)	1569 - 1,922 (16.0 - 19.6, 227.6 - 278.8)	265 - 324 (2.7 - 3.3, 38.4 - 46.9)
	35 (95)	1,697 - 2079 (17.3 - 21.2, 246.1 - 301.5)	304 - 363 (3.1 - 3.7, 44.1 - 52.6)
	40 (104)	1971 - 2403 (20.1 - 24.5, 285.9 - 348.5)	373 - 451 (3.8 - 4.6, 54.0 - 65.4)

TROUBLE DIAGNOSES FOR UNUSUAL PRESSURE

Whenever system's high and/or low side pressure is unusual, diagnose using a manifold gauge. The marker above the gauge scale in the following tables indicates the standard (usual) pressure range. Since the standard (usual) pressure, however, differs from vehicle to vehicle, refer to above table (Ambient air temperature-to-operating pressure table).

Both High- and Low-pressure Sides are Too High

Gauge indication	Refrigerant cycle	Probable cause	Corrective action
Both high- and low-pressure sides are too high. 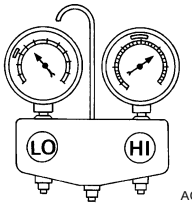 AC359A	Pressure is reduced soon after water is splashed on condenser.	Excessive refrigerant charge in refrigeration cycle	Reduce refrigerant until specified pressure is obtained.
	Air suction by cooling fan is insufficient.	Insufficient condenser cooling performance ↓ 1. Condenser fins are clogged. 2. Improper fan rotation of cooling fan	● Clean condenser. ● Check and repair cooling fan if necessary.
	● Low-pressure pipe is not cold. ● When compressor is stopped high-pressure value quickly drops by approximately 196 kPa (2 kg/cm^2 , 28 psi). It then decreases gradually thereafter.	Poor heat exchange in condenser (After compressor operation stops, high-pressure decreases too slowly.) ↓ Air in refrigeration cycle	Evacuate and recharge system.
	Engine tends to overheat.	Engine cooling systems malfunction.	Check and repair engine cooling system.
	● An area of the low-pressure pipe is colder than areas near the evaporator outlet. ● Plates are sometimes covered with frost.	● Excessive liquid refrigerant on low-pressure side ● Excessive refrigerant discharge flow ● Expansion valve is open a little compared with the specification. ↓ Improper expansion valve adjustment	Replace expansion valve.

High-pressure Side is Too High and Low-pressure Side is Too Low

Gauge indication	Refrigerant cycle	Probable cause	Corrective action
High-pressure side is too high and low-pressure side is too low. 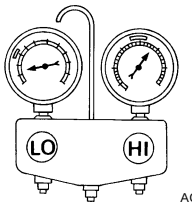 AC360A	Upper side of condenser and high-pressure side are hot, however, liquid tank is not so hot.	High-pressure tube or parts located between compressor and condenser are clogged or crushed.	● Check and repair or replace malfunctioning parts. ● Check oil for contamination.

High-pressure Side is Too Low and Low-pressure Side is Too High

Gauge indication	Refrigerant cycle	Probable cause	Corrective action
High-pressure side is too low and low-pressure side is too high. 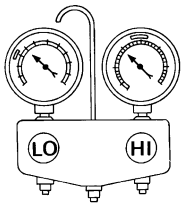 AC356A	High- and low-pressure sides become equal soon after compressor operation stops.	Compressor pressure operation is improper. ↓ Damaged inside compressor packings.	Replace compressor.
	No temperature difference between high- and low-pressure sides.	Compressor pressure operation is improper. ↓ Damaged inside compressor packings.	Replace compressor.

Both High- and Low-pressure Sides are Too Low

Gauge indication	Refrigerant cycle	Probable cause	Corrective action
Both high- and low-pressure sides are too low. 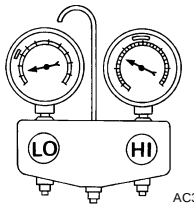 AC353A	● There is a big temperature difference between liquid tank outlet and inlet. Outlet temperature is extremely low. ● Liquid tank inlet and expansion valve are frosted.	Liquid tank inside is slightly clogged.	● Replace liquid tank. ● Check oil for contamination.
	● Temperature of expansion valve inlet is extremely low as compared with areas near liquid tank. ● Expansion valve inlet may be frosted. ● Temperature difference occurs somewhere in high-pressure side.	High-pressure pipe located between liquid tank and expansion valve is clogged.	● Check and repair malfunctioning parts. ● Check oil for contamination.
	Expansion valve and liquid tank are warm or only cool when touched.	Low refrigerant charge. ↓ Leaking fittings or components.	Check refrigerant system for leaks. Refer to MTC-123, "Checking for Refrigerant Leaks" .
	There is a big temperature difference between expansion valve inlet and outlet while the valve itself is frosted.	Expansion valve closes a little compared with the specification. ↓ 1. Improper expansion valve adjustment. 2. Malfunctioning expansion valve. 3. Outlet and inlet may be clogged.	● Remove foreign particles by using compressed air. ● Check oil for contamination.
	An area of the low-pressure pipe is colder than areas near the evaporator outlet.	Low-pressure pipe is clogged or crushed.	● Check and repair malfunctioning parts. ● Check oil for contamination.
	Air flow volume is too low.	Evaporator is frozen.	● Check intake sensor circuit. Refer to MTC-93, "Intake Sensor Circuit" . ● Repair evaporator fins. ● Replace evaporator. ● Refer to MTC-70, "Front Blower Motor Circuit" .

Low-pressure Side Sometimes Becomes Negative

Gauge indication	Refrigerant cycle	Probable cause	Corrective action
Low-pressure side sometimes becomes negative. 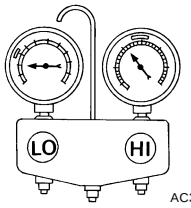	● Air conditioning system does not function and does not cyclically cool the compartment air. ● The system constantly functions for a certain period of time after compressor is stopped and restarted.	Refrigerant does not discharge cyclically. ↓ Moisture is frozen at expansion valve outlet and inlet. ↓ Water is mixed with refrigerant.	● Drain water from refrigerant or replace refrigerant. ● Replace liquid tank.

Low-pressure Side Becomes Negative

Gauge indication	Refrigerant cycle	Probable cause	Corrective action
Low-pressure side becomes negative. 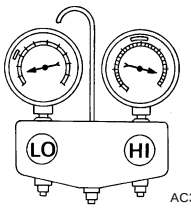	Liquid tank or front/rear side of expansion valve's pipe is frosted or dewed.	High-pressure side is closed and refrigerant does not flow. ↓ Expansion valve or liquid tank is frosted.	Leave the system at rest until no frost is present. Start it again to check whether or not the malfunction is caused by water or foreign particles. ● If water is the cause, initially cooling is okay. Then the water freezes causing a blockage. Drain water from refrigerant or replace refrigerant. ● If due to foreign particles, remove expansion valve and remove the particles with dry and compressed air (not shop air). ● If either of the above methods cannot correct the malfunction, replace expansion valve. ● Replace liquid tank. ● Check oil for contamination.

Insufficient Heating

EJS003UF

SYMPTOM: Insufficient heating

INSPECTION FLOW

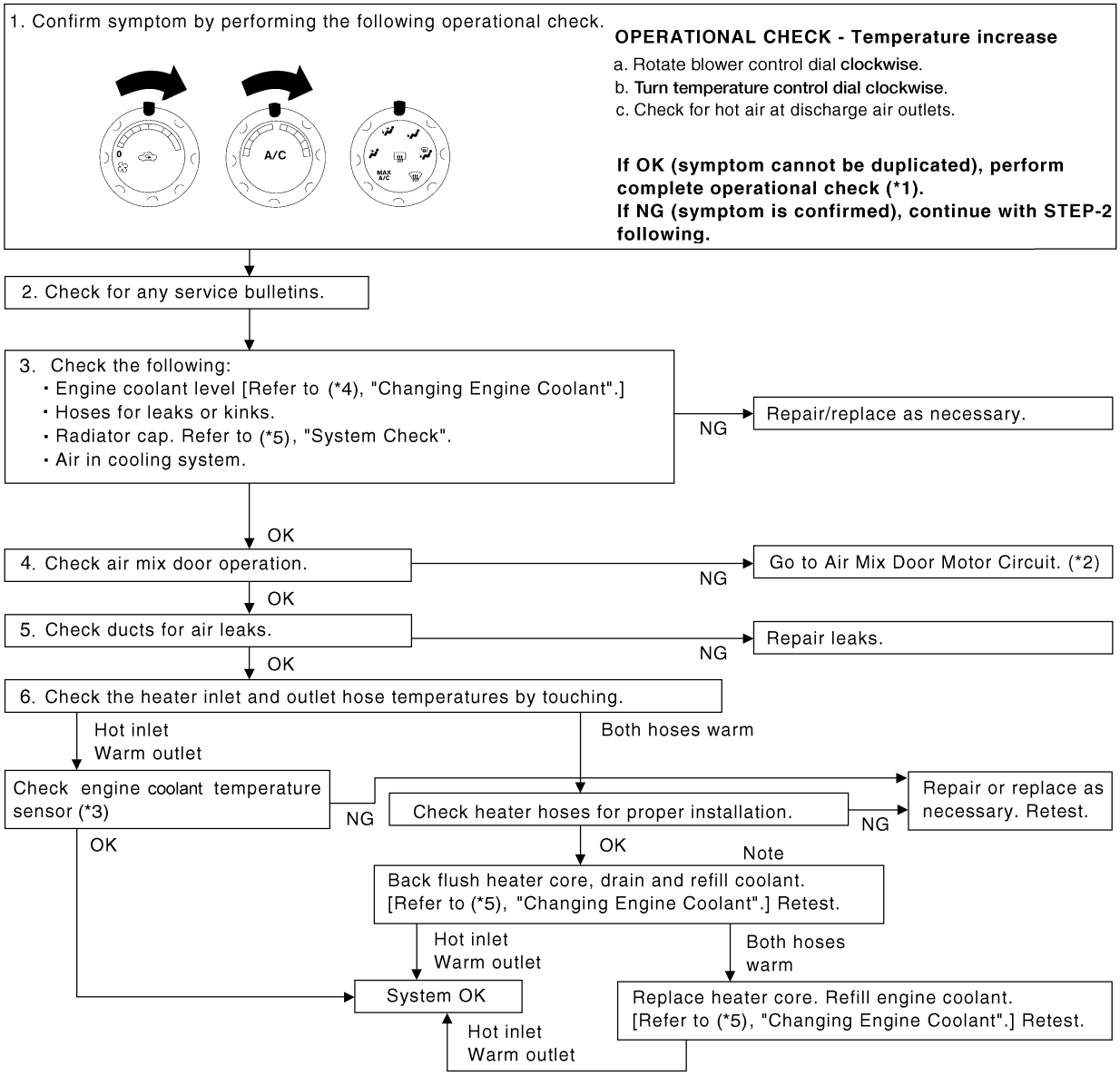

WJIA1933E

*1 .MTC-46, "Operational Check" *2 MTC-56, "Air Mix Door Motor Circuit" *3 EC-198, "DTC P0117, P0118 ECT SENSOR"

*4 CO-10, "ENGINE COOLANT" *5 MTC-102, "HEATER CORE"

Noise

EJS003UG

SYMPTOM: Noise

INSPECTION FLOW

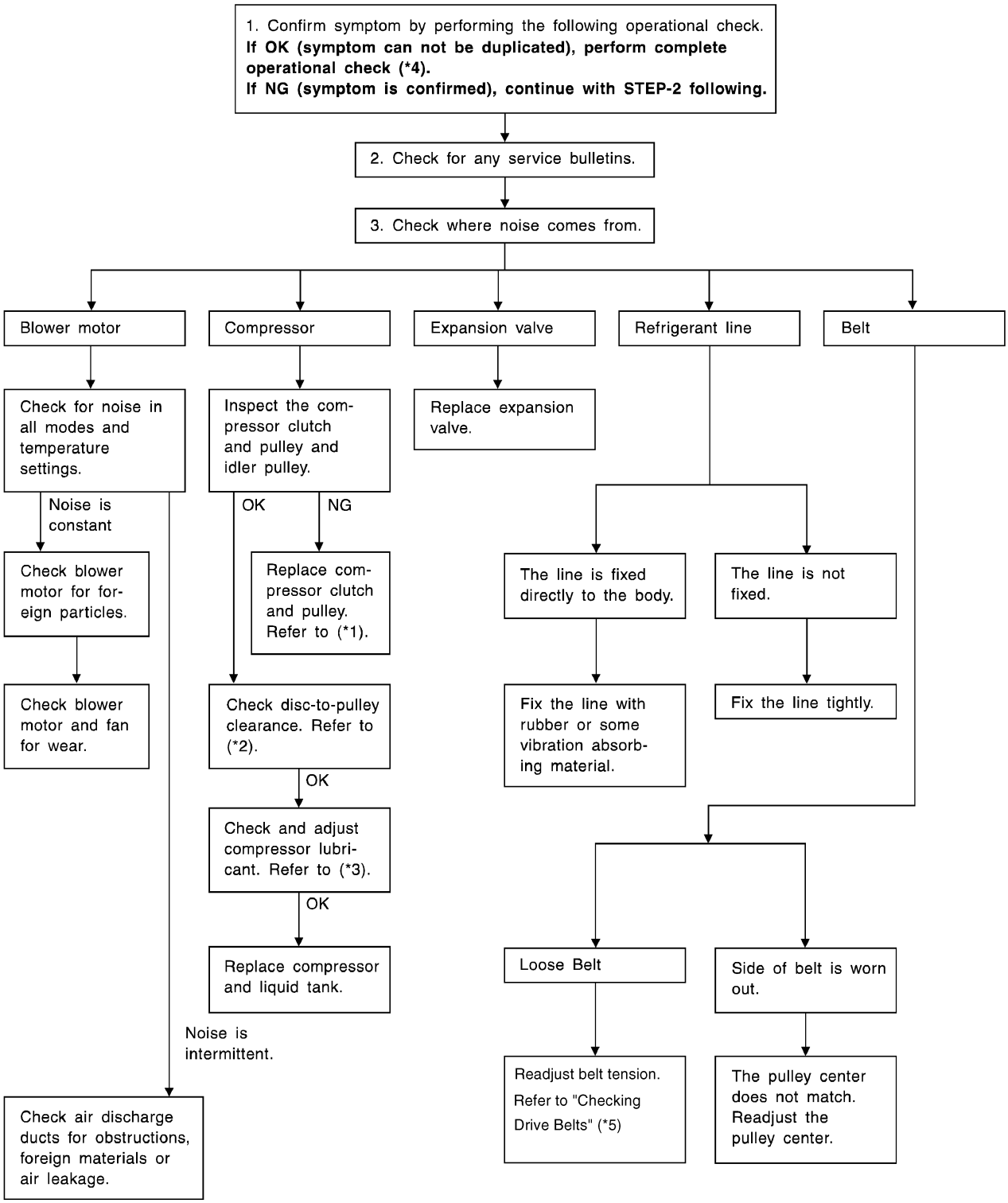

WJIA0473E

*1 MTC-116, "Removal and Installation for Compressor Clutch".
*2 MTC-117, "Clutch Disc".
*3 MTC-20, "Maintenance of Oil Quantity in Compressor".
*4 MTC-46, "Operational Check".
*5 EM-13, "Checking Drive Belts".

Water Valve Circuit

EJS003UI

COMPONENT DESCRIPTION

Water Valve

Front: ⇒

The water valve (1) cuts the flow of engine coolant to the front heater cores to allow for maximum cooling during A/C operation. It is controlled by the front air control.

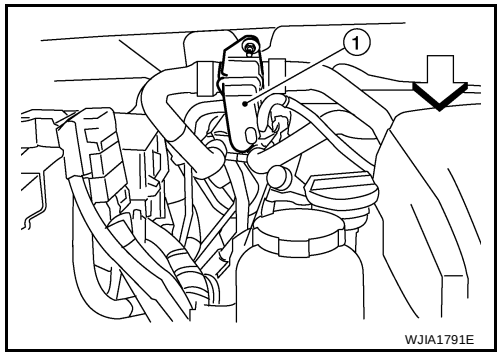

DIAGNOSTIC PROCEDURE FOR WATER VALVE

1. CHECK WATER VALVE POWER AND GROUND CIRCUITS

1. Disconnect water valve connector F68.
2. Turn ignition switch ON.
3. Rotate mode dial to MAX A/C.
4. Rotate temperature control dial to maximum heat.
5. Check voltage between water valve harness connector F68 terminal 1 and terminal 2 while rotating temperature control dial to maximum cold.

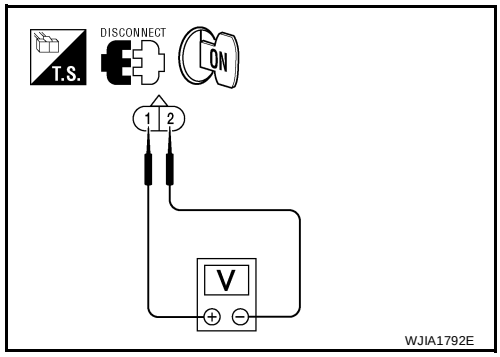

Connector	Terminals		Condition	Voltage (Approx.)
	(+)	(-)		
Water valve: F68	1	2	Rotate temperature control dial	Battery voltage

OK or NG

OK >> GO TO 3.
NG >> GO TO 2.

2. CHECK WATER VALVE CONTROL OUTPUT CIRCUIT

1. Turn ignition switch OFF.
2. Disconnect front air control connector M50.
3. Check continuity between water valve harness connector F68 (A) terminal 1 and front air control harness connector M50 (B) terminal 29.

1 - 29 : Continuity should exist.

4. Check continuity between water valve harness connector F68 (A) terminal 1 and ground.

1 - Ground : Continuity should not exist.

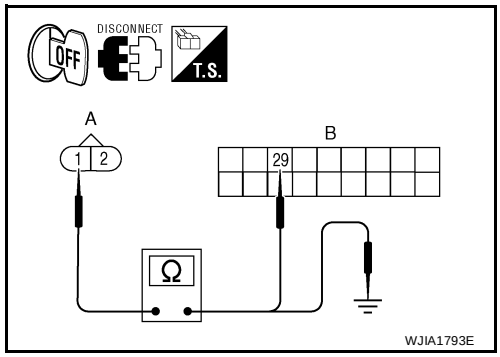

OK or NG

OK >> Replace front air control. Refer to MTC-95, "REMOVAL" .
NG >> Repair harness or connector.

3. CHECK WATER VALVE POWER AND GROUND CIRCUITS

1. Rotate temperature control dial to maximum cold.
2. Check voltage between water valve harness connector F68 terminal 1 and terminal 2 while rotating temperature control dial to maximum heat.

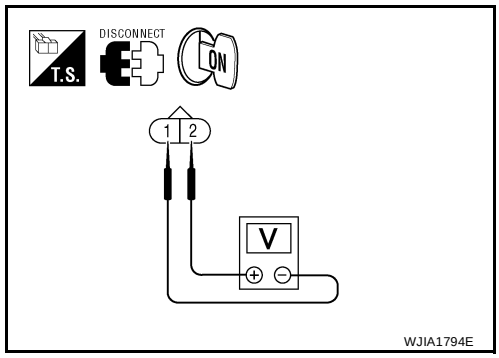

Connector	Terminals		Condition	Voltage (Approx.)
	(+)	(-)		
Water valve: F68	2	1	Rotate temperature control dial	Battery voltage

OK or NG

OK >> Replace the water valve.
NG >> GO TO 4.

4. CHECK WATER VALVE CONTROL OUTPUT CIRCUIT

1. Turn ignition switch OFF.
2. Disconnect front air control connector M50.
3. Check continuity between water valve harness connector F68 (A) terminal 2 and front air control harness connector M50 (B) terminal 30.

   2 - 30 : Continuity should exist.

4. Check continuity between water valve harness connector F68 (A) terminal 2 and ground.

   2 - Ground : Continuity should not exist.

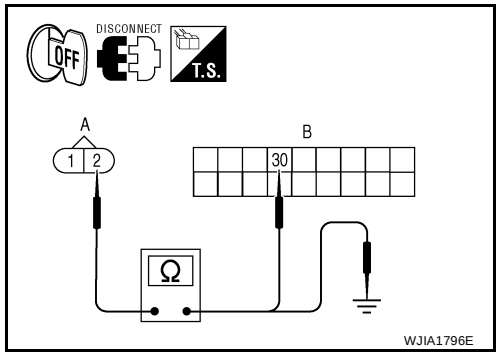

OK or NG

OK >> Replace front air control. Refer to MTC-95, "REMOVAL" .
NG >> Repair harness or connector.

Intake Sensor Circuit

EJS003UJ

COMPONENT DESCRIPTION

Intake Sensor

The intake sensor is located on top of the heater and cooling unit assembly next to the A/C evaporator cover. It converts temperature of air after it passes through the evaporator into a resistance value which is then input to the front air control.

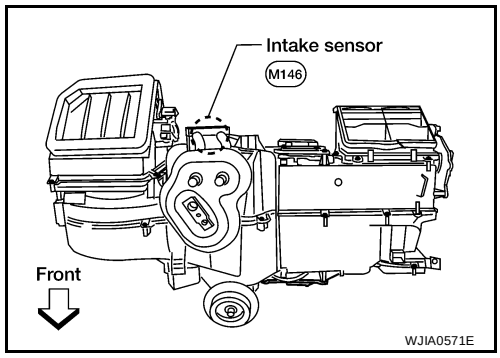

DIAGNOSTIC PROCEDURE FOR INTAKE SENSOR

SYMPTOM: Intake sensor circuit is open or shorted. Using the CONSULT-II, DTC B2581 or B2582 is displayed.

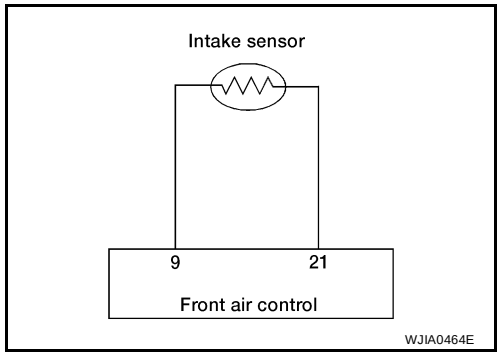

1. CHECK VOLTAGE BETWEEN INTAKE SENSOR AND GROUND

1. Disconnect intake sensor connector.
2. Turn ignition switch ON.
3. Check voltage between intake sensor harness connector M146 terminal 2 and ground.

2 - Ground : Approx. 5V

OK or NG

OK >> GO TO 2.
NG >> GO TO 4.

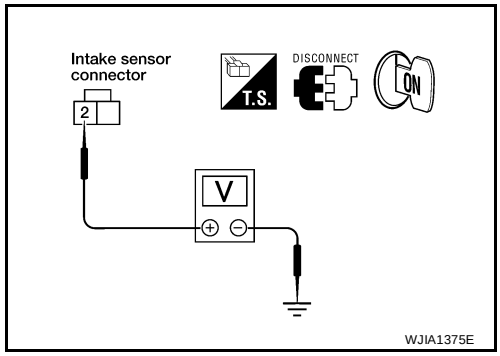

2. CHECK CIRCUIT CONTINUITY BETWEEN INTAKE SENSOR AND FRONT AIR CONTROL

1. Turn ignition switch OFF.
2. Disconnect front air control connector.
3. Check continuity between intake sensor harness connector M146 terminal 1 and front air control harness connector M49 terminal 21.

1 - 21 : Continuity should exist.

OK or NG

OK >> GO TO 3.
NG >> Repair harness or connector as necessary.

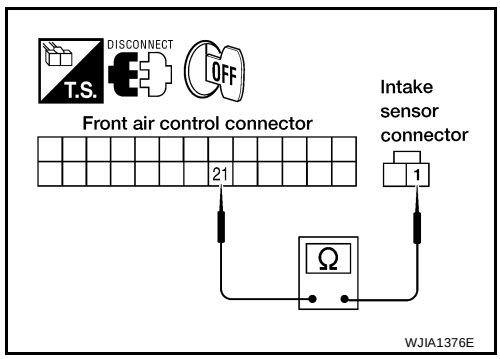

3. CHECK INTAKE SENSOR

Check intake sensor. Refer to MTC-93, "Intake Sensor Circuit" .

OK or NG

OK >> Replace front air control. Refer to MTC-95, "CONTROL UNIT" .
NG >> Replace intake sensor. Refer to MTC-96, "INTAKE SENSOR" .

4. CHECK CIRCUIT CONTINUITY BETWEEN INTAKE SENSOR AND FRONT AIR CONTROL

1. Turn ignition switch OFF.
2. Disconnect front air control connector.
3. Check continuity between intake sensor harness connector M146 terminal 2 and front air control harness connector M49 terminal 9.

   2 - 9 : Continuity should exist.

4. Check continuity between intake sensor harness connector M146 terminal 2 and ground.

   2 - Ground : Continuity should not exist.

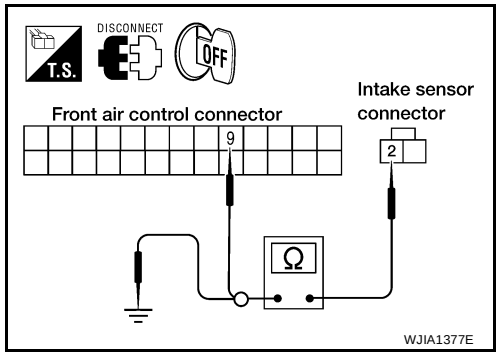

OK or NG

OK >> Replace front air control. Refer to MTC-95, "CONTROL UNIT" .
NG >> Repair harness or connector as necessary.

COMPONENT INSPECTION

Intake Sensor

After disconnecting intake sensor connector, measure resistance between terminals 1 and 2 at sensor harness side, using the table below.

Temperature °C (°F)	Resistance kΩ
–15 (5)	209.0
–10 (14)	160.0
–5 (23)	123.0
0 (32)	95.8
5 (41)	74.9
10 (50)	58.9
15 (59)	46.7
20 (68)	37.3
25 (77)	30.0
30 (86)	24.2
35 (95)	19.7
40 (104)	16.1
45 (113)	13.2

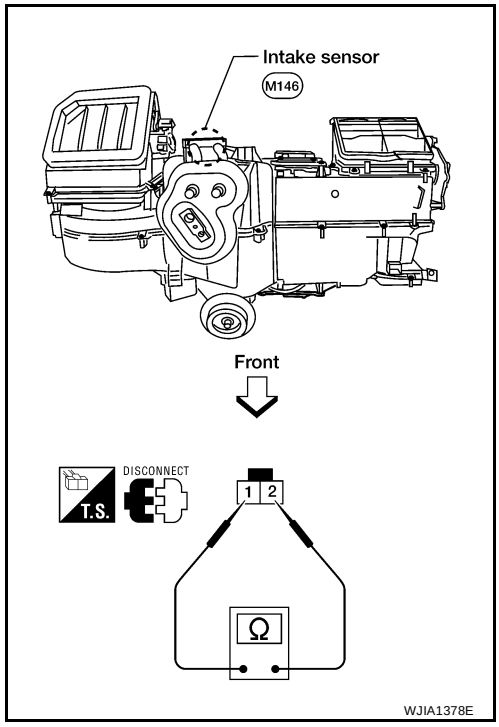

If NG, replace intake sensor. Refer to MTC-96, "INTAKE SENSOR" .

CONTROL UNIT

PFP:27500

Removal and Installation

EJS0032V

REMOVAL

1. Remove the three control knobs from the front air control unit.
2. Remove the cluster lid C. Refer to IP-10, "Removal and Installation" .
3. Remove the four screws securing the front air control unit to the cluster lid C.
4. Disconnect the two electrical connectors.
5. Remove the front air control unit.

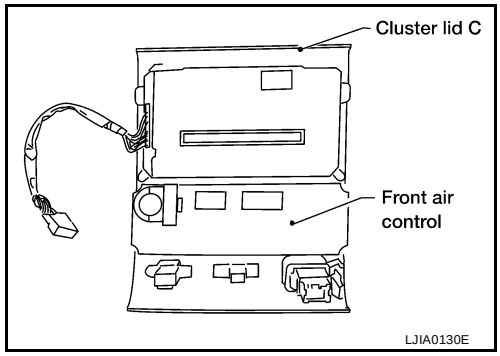

INSTALLATION

Installation is in the reverse order of removal.

INTAKE SENSOR

PFP:27723

Removal and Installation

EJS0032W

REMOVAL

1. Remove the instrument panel. Refer to IP-10, "Removal and Installation" .
2. Disconnect the intake sensor electrical connector.

   NOTE:
   The intake sensor is located on the top of the heater and cooling unit assembly next to the A/C evaporator cover.
3. Twist the intake sensor to remove the intake sensor from the heater and cooling unit assembly.

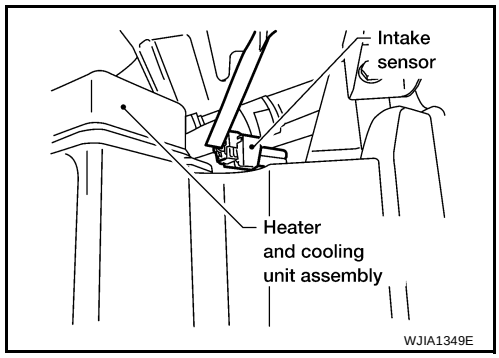

INSTALLATION

Installation is in the reverse order of removal.

BLOWER MOTOR

PFP:27226

Removal and Installation

EJS0032X

Blower Motor - Heater and Cooling Unit Assembly

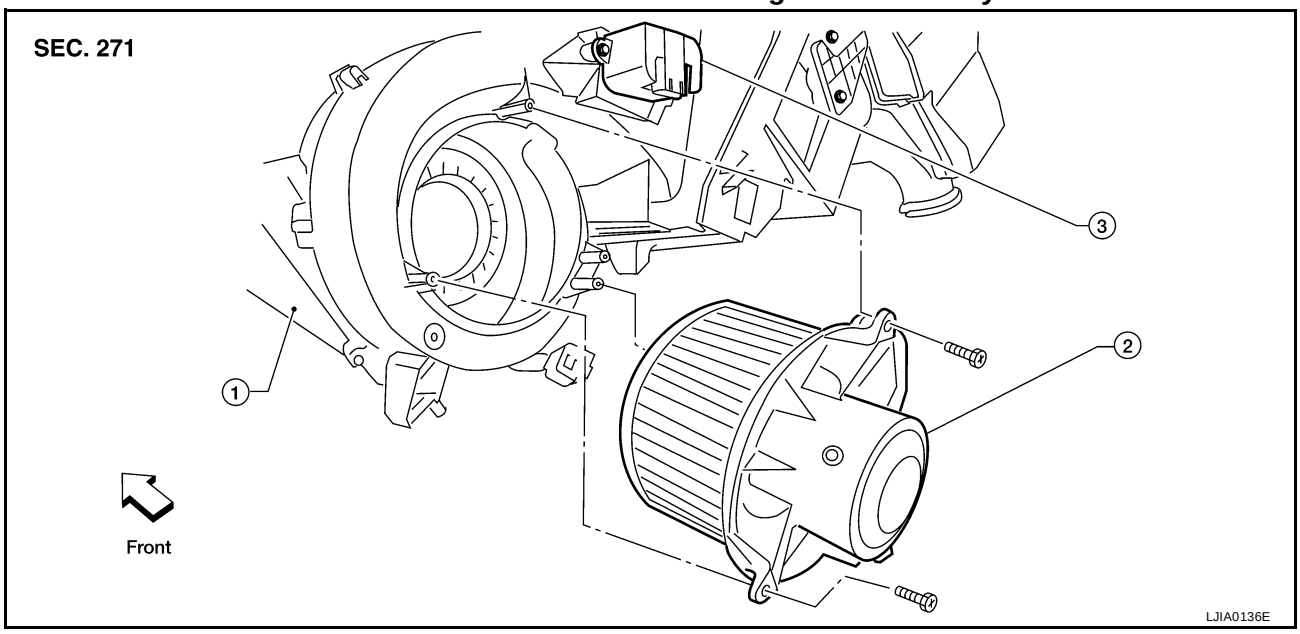

1. Heater and cooling unit assembly
2. Blower motor
3. Variable blower control

REMOVAL

1. Remove the glove box assembly. Refer to IP-10, "Removal and Installation" .
2. Disconnect the blower motor electrical connector.
3. Remove the three screws and remove the blower motor.

INSTALLATION

Installation is in the reverse order of removal.

IN-CABIN MICROFILTER

PFP:27277

Removal and Installation

EJS0032Y

FUNCTION

The air inside the passenger compartment is filtered by the in-cabin microfilters when the heater or A/C controls are set on either the recirculation or fresh mode. The two in-cabin microfilters are located in the front heater and cooling unit assembly.

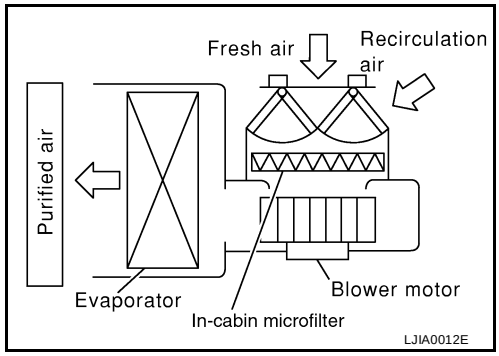

REPLACEMENT TIMING

Replacement of the two in-cabin microfilters is recommended on a regular interval depending on the driving conditions. Refer to MA-7, "PERIODIC MAINTENANCE" . It may also be necessary to replace the two in-cabin microfilters as part of a component replacement if the in-cabin microfilters are damaged.

REPLACEMENT PROCEDURE

1. Remove the two lower glove box hinge pins to remove the glove box from the instrument panel and let it hang from the cord.

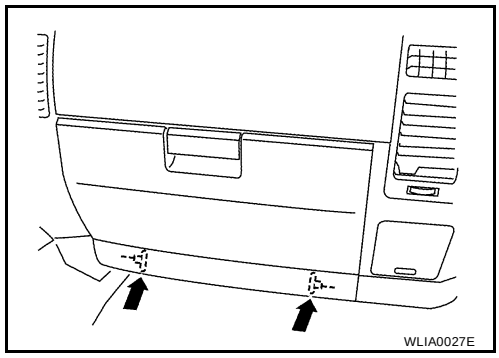

2. Remove the screw and remove the in-cabin microfilter cover.
3. Remove the in-cabin microfilters from the front heater and cooling unit assembly housing.

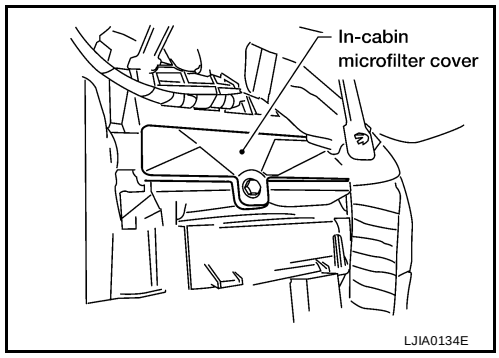

4. Insert the first new in-cabin microfilter into the front heater and cooling unit assembly housing and slide it over to the right. Insert the second new in-cabin microfilter into the front heater and cooling unit assembly housing.

   NOTE:
   The in-cabin microfilters are marked with air flow arrows. The end of the microfilter with the arrow should face the rear of the vehicle. The arrows should point downward.

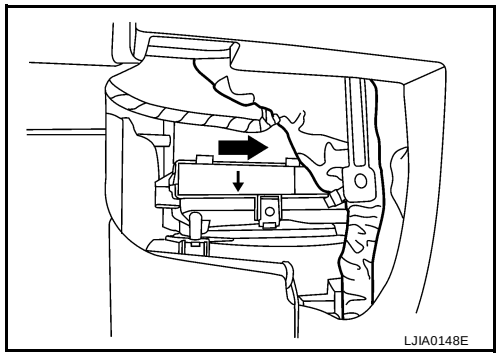

5. Install the in-cabin microfilter cover.

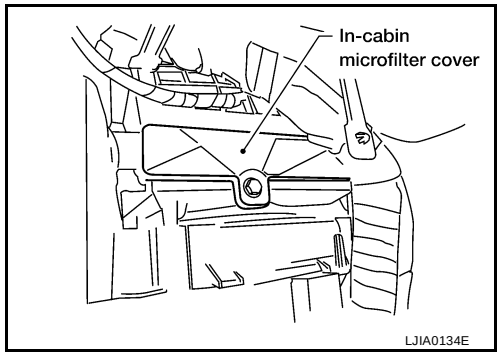

6. Install the lower glove box in the instrument panel and secure it with the two hinge pins.

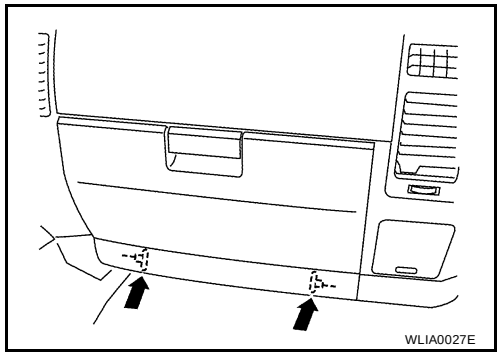

HEATER & COOLING UNIT ASSEMBLY

PFP:27110

Removal and Installation

EJS0032Z

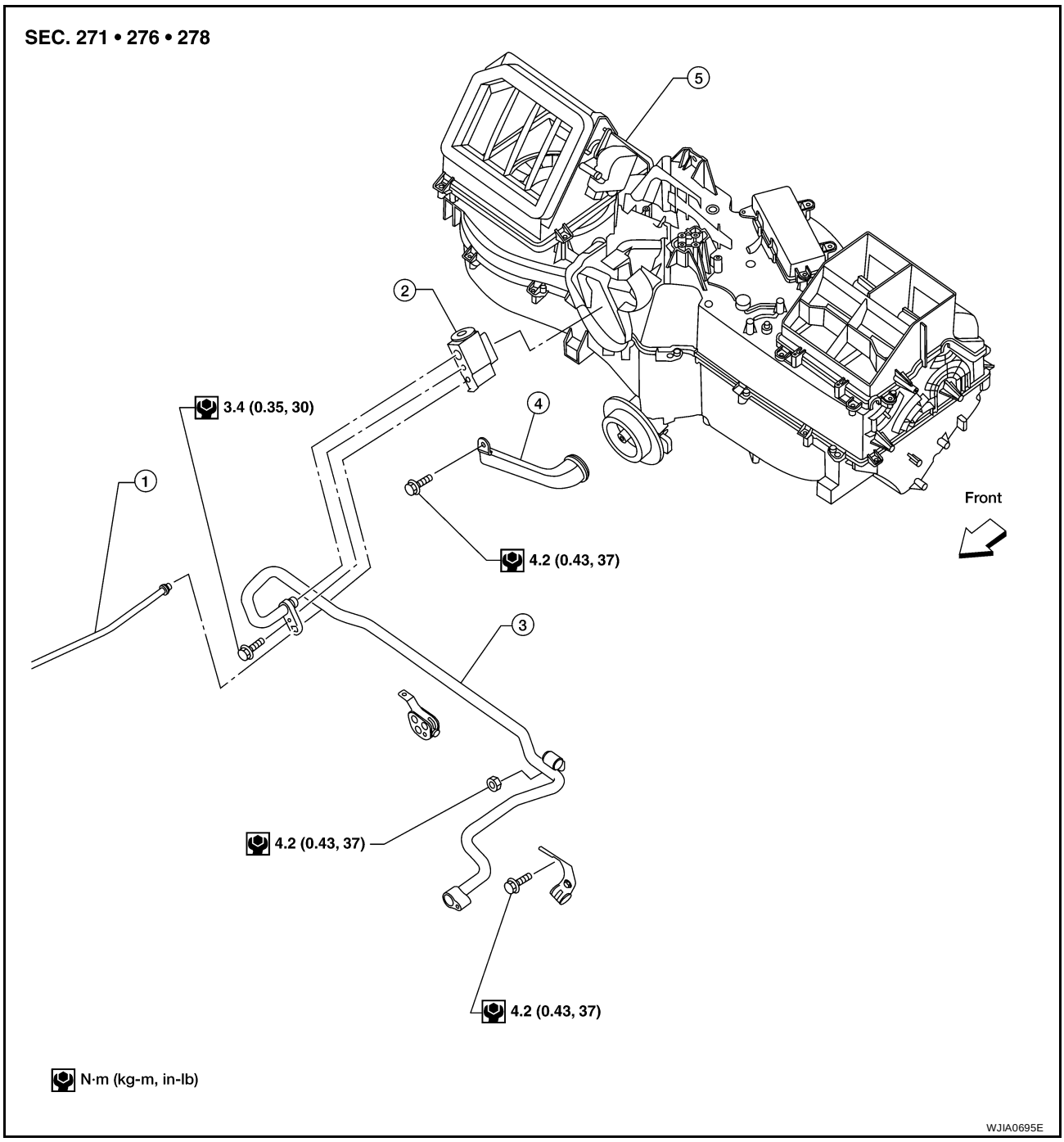

1. High-pressure A/C pipe
2. Expansion valve
3. Low-pressure A/C pipe
4. A/C drain hose
5. Heater and cooling unit assembly

REMOVAL

1. Discharge the refrigerant from the A/C system. Refer to MTC-112, "Discharging Refrigerant" .
2. Drain the coolant from the engine cooling system. Refer to MA-13, "DRAINING ENGINE COOLANT" .
3. Disconnect the heater hoses from the heater core.
4. Disconnect the high/low pressure pipes from the expansion valve.
5. Move the two front seats to the rearmost position on the seat track.
6. Disconnect the battery negative terminal and battery positive terminal.
7. Remove the instrument panel and console panel. Refer to IP-10, "Removal and Installation" .

8. Remove the steering column. Refer to PS-9, "Removal and Installation" .
9. Disconnect the instrument panel wire harness at the RH and LH in-line connector brackets, and the fuse block (J/B) electrical connectors. Refer to PG-41, "Harness Layout" .
10. Disconnect the steering member from each side of the vehicle body.
11. Remove the heater and cooling unit assembly with it attached to the steering member, from the vehicle.

    CAUTION:
    Use care not to damage the seats and interior trim panels when removing the heater and cooling unit assembly with it attached to the steering member.
12. Remove the heater and cooling unit assembly from the steering member.

INSTALLATION

Installation is in the reverse order of removal.

CAUTION:

- **Replace the O-rings of the low-pressure pipe and high-pressure pipe with new ones, then apply compressor oil to them when installing them.**
- **After charging the refrigerant, check for leaks.**

NOTE:

- Fill the engine cooling system with the specified coolant mixture. Refer to MA-11, "Fluids and Lubricants" .
- Recharge the A/C system. Refer to MTC-112, "Evacuating System and Charging Refrigerant" .

HEATER CORE

PFP:27140

Removal and Installation

EJS00330

Heater and Cooling Unit Assembly

SEC. 271

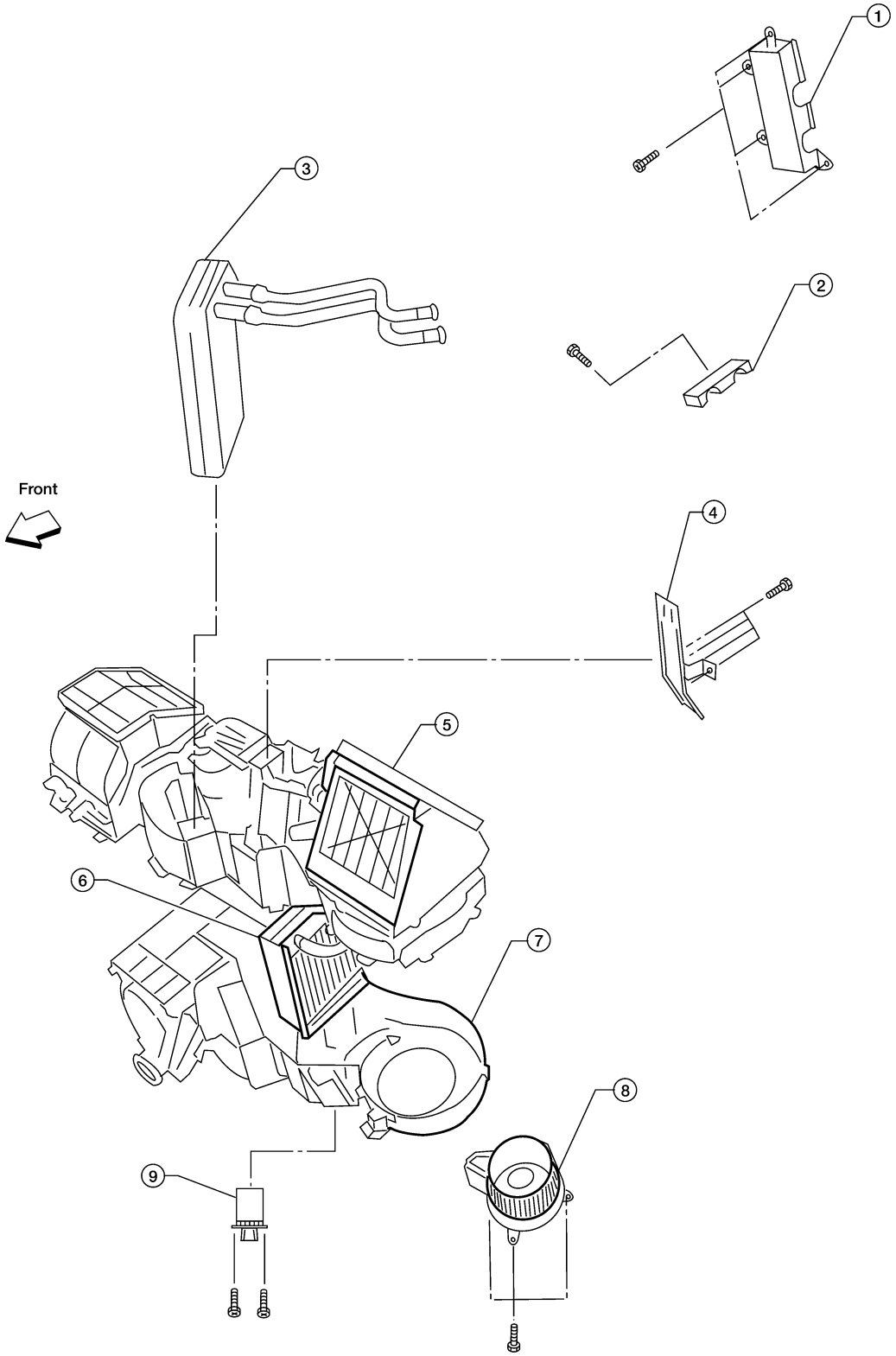

1.	Heater core cover	2.	Heater core pipe bracket	3.	Heater core
4.	Upper bracket	5.	Upper heater and cooling unit case	6.	A/C evaporator
7.	Lower heater and cooling unit case	8.	Blower motor	9.	Variable blower control

REMOVAL

1. Remove the heater and cooling unit assembly. Refer to MTC-100, "Removal and Installation" .
2. Remove the four screws and remove the upper bracket.
3. Remove the four screws and remove the heater core cover.
4. Remove the heater core pipe bracket.
5. Remove the heater core.

   NOTE:
   If the in-cabin microfilters are contaminated from coolant leaking from the heater core, replace the in-cabin microfilters with new ones before installing the new heater core.

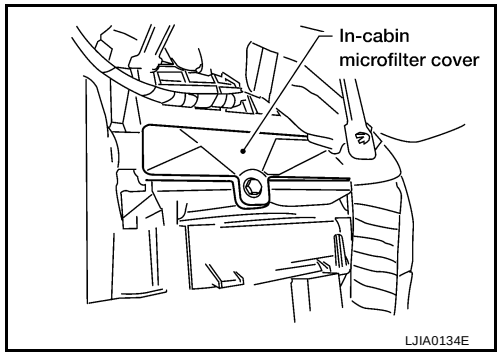

INSTALLATION

Installation is in the reverse order of removal.

DEFROSTER DOOR MOTOR

PFP:27733

Removal and Installation

EJS00331

Defroster Door Motor - Heater and Cooling Unit Assembly

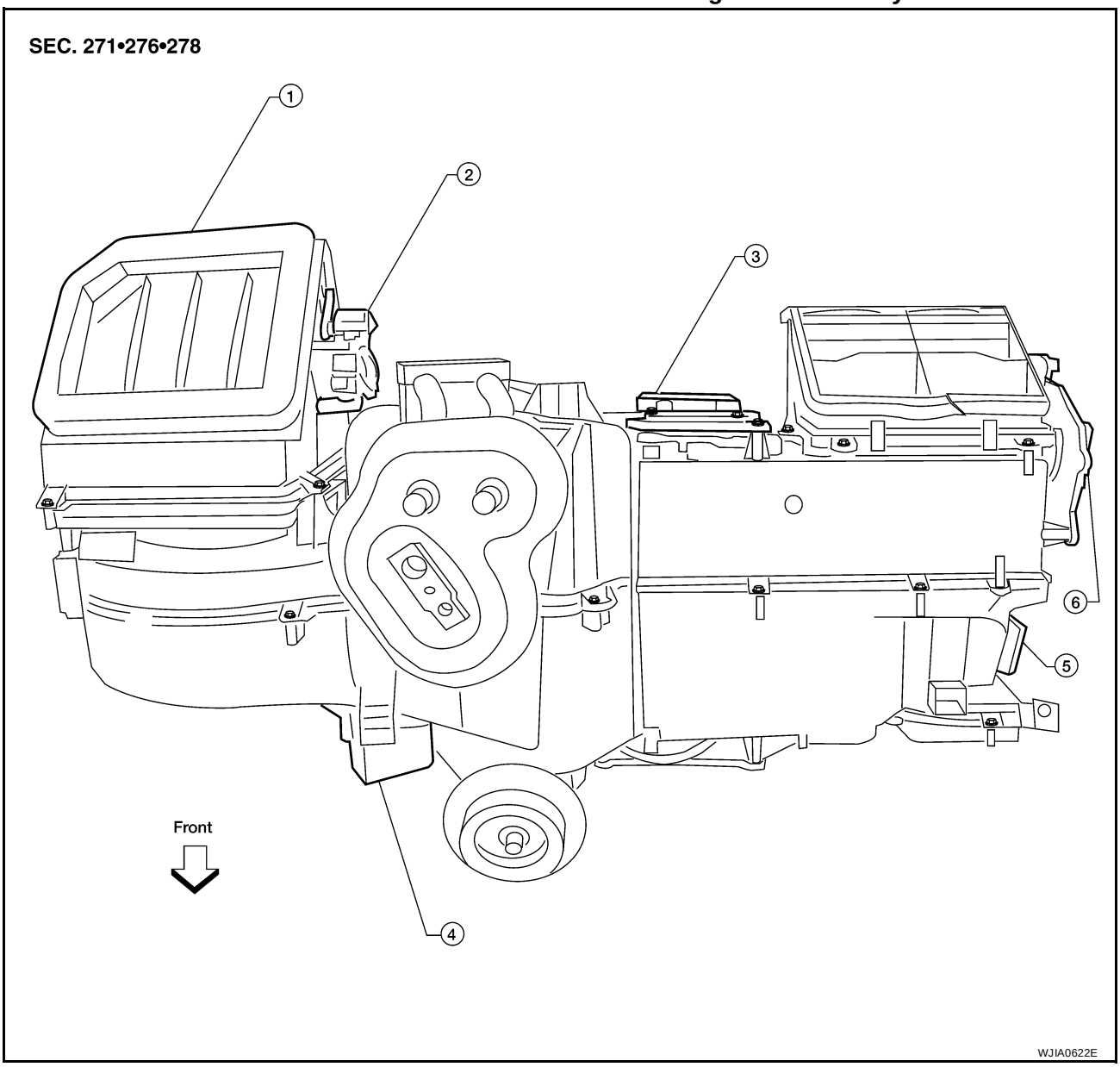

1.	Heater and cooling unit assembly	2.	Intake door motor	3.	Air mix door motor
4.	Variable blower control	5.	Mode door motor	6.	Defroster door motor

REMOVAL

1. Remove the BCM. Refer to BCS-20, "BCM" .
2. Remove the audio amplifier, if equipped. Refer to AV-74, "AUDIO AMP." .
3. Disconnect the defroster door motor electrical connector.
4. Remove the three screws and remove the defroster door motor.

INSTALLATION

Installation is in the reverse order of removal.

INTAKE DOOR MOTOR

PFP:27730

Removal and Installation

EJS00332

Intake Door Motor - Heater and Cooling Unit Assembly

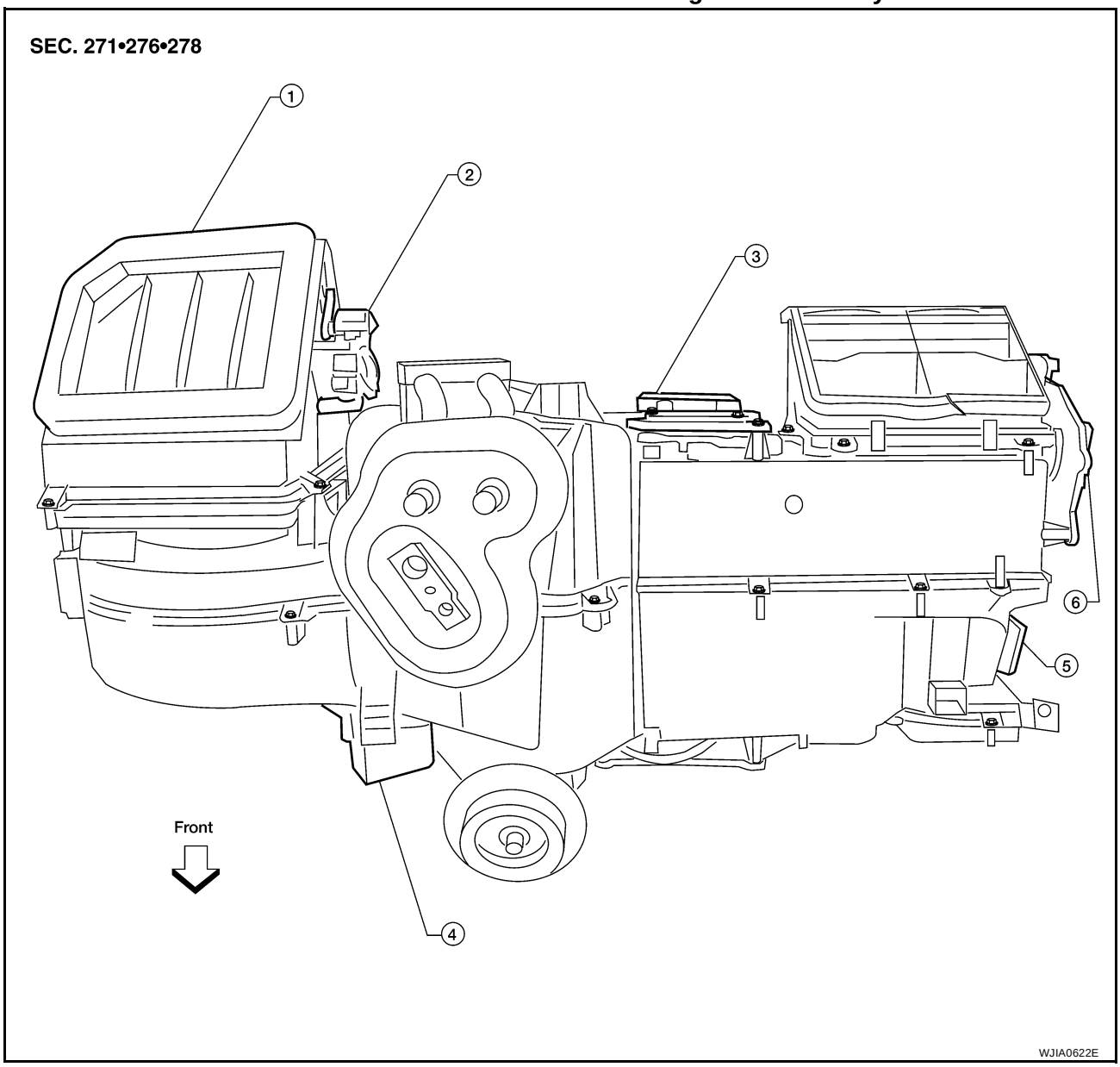

1.	Heater and cooling unit assembly	2.	Intake door motor	3.	Air mix door motor
4.	Variable blower control	5.	Mode door motor	6.	Defroster door motor

REMOVAL

1. Remove the heater and cooling unit assembly. Refer to MTC-100, "Removal and Installation" .
2. Remove the steering member from the heater and cooling unit assembly.
3. Disconnect the intake door motor electrical connector.
4. Remove the three screws and remove the intake door motor.

INSTALLATION

Installation is in the reverse order of removal.

MODE DOOR MOTOR

PFP:27731

Removal and Installation

EJS00333

Mode Door Motor - Heater and Cooling Unit Assembly

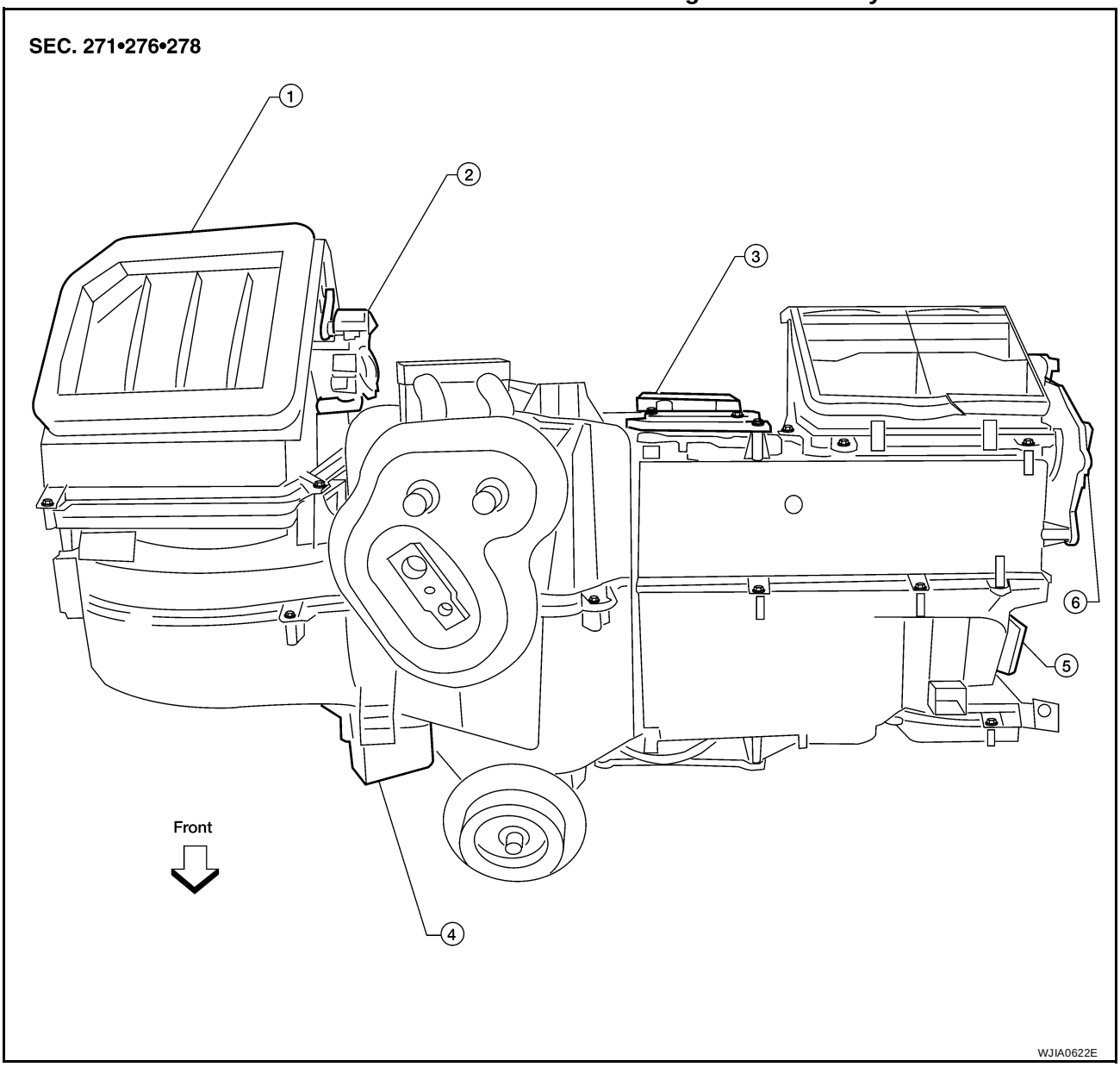

1.	Heater and cooling unit assembly	2.	Intake door motor	3.	Air mix door motor
4.	Variable blower control	5.	Mode door motor	6.	Defroster door motor

REMOVAL

1. Remove the center console lower cover LH. Refer to IP-15, "REMOVAL AND INSTALLATION" .
2. Disconnect the mode door motor electrical connector.
3. Remove the two screws and remove the mode door motor.

INSTALLATION

Installation is in the reverse order of removal.

AIR MIX DOOR MOTOR

PFP:27732

Removal and Installation

EJS00334

Air Mix Door Motor - Heater and Cooling Unit Assembly

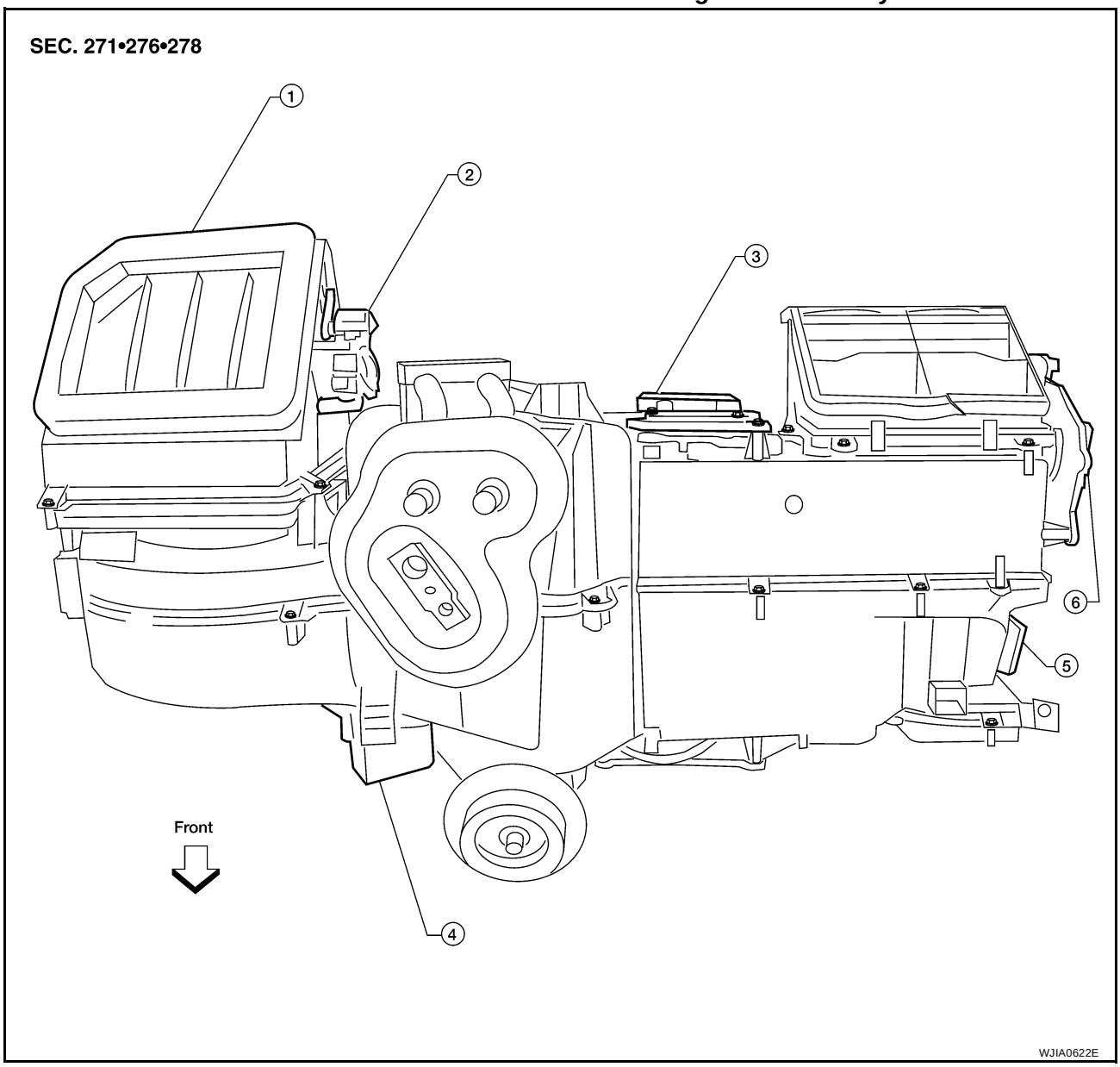

1.	Heater and cooling unit assembly	2.	Intake door motor	3.	Air mix door motor
4.	Variable blower control	5.	Mode door motor	6.	Defroster door motor

REMOVAL

1. Remove the heater and cooling unit assembly. Refer to MTC-100, "Removal and Installation" .
2. Remove the steering member from the heater and cooling unit assembly.
3. Disconnect the air mix door motor electrical connector.
4. Remove the three screws and remove the air mix door motor.

INSTALLATION

Installation is in the reverse order of removal.

VARIABLE BLOWER CONTROL

PFP:27200

Removal and Installation

EJS00335

Variable Blower Control - Heater and Cooling Unit Assembly

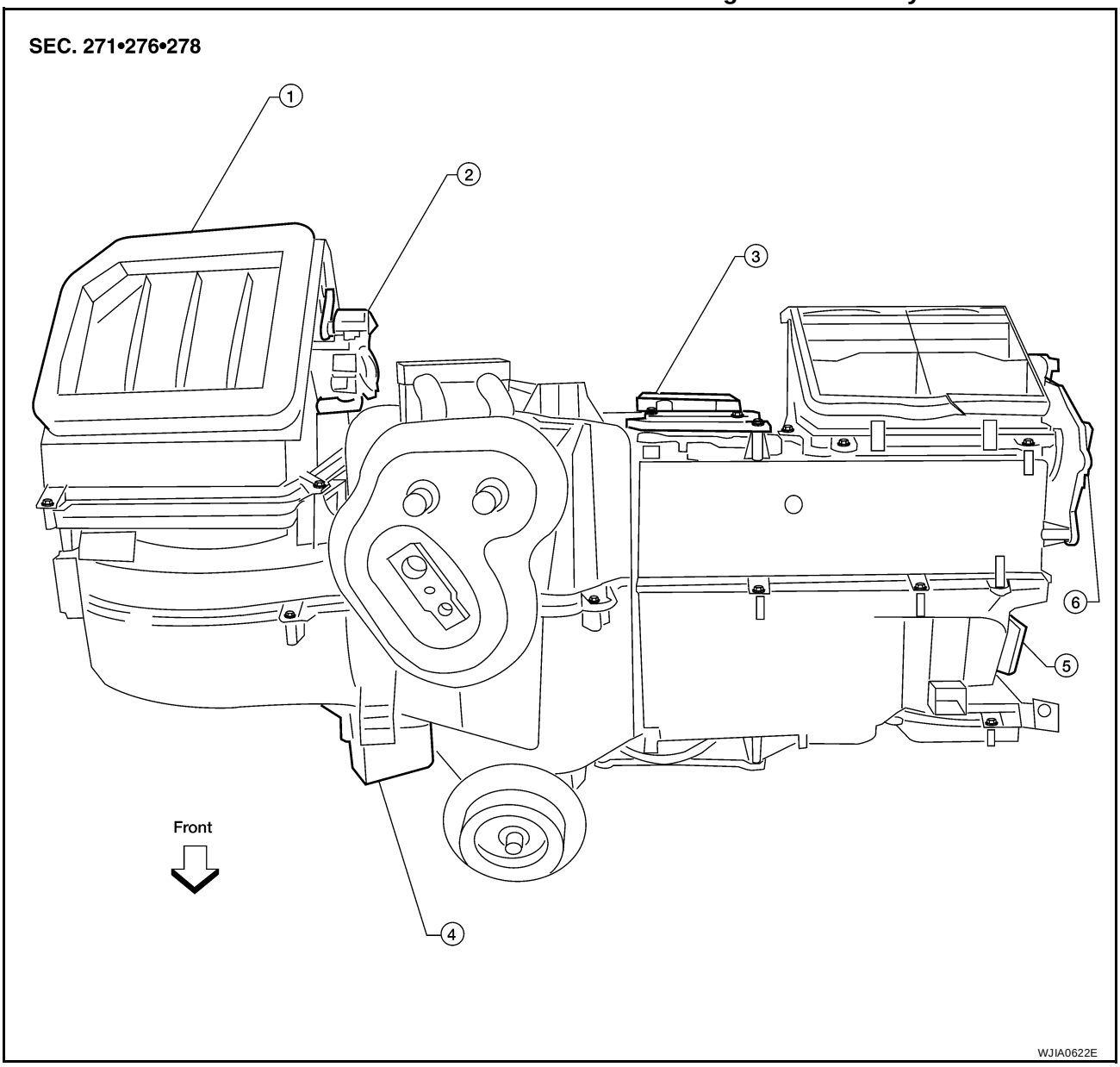

1.	Heater and cooling unit assembly	2.	Intake door motor	3.	Air mix door motor
4.	Variable blower control	5.	Mode door motor	6.	Defroster door motor

REMOVAL

1. Remove the glove box assembly. Refer to IP-14, "LOWER INSTRUMENT PANEL RH AND GLOVE BOX".
2. Disconnect the variable blower control electrical connector.
3. Remove the two screws and remove the variable blower control.

INSTALLATION

Installation is in the reverse order of removal.

DUCTS AND GRILLES

PFP:27860

Removal and Installation

EJS00336

Ducts - Heater and Cooling Unit Assembly

SEC. 270 • 271

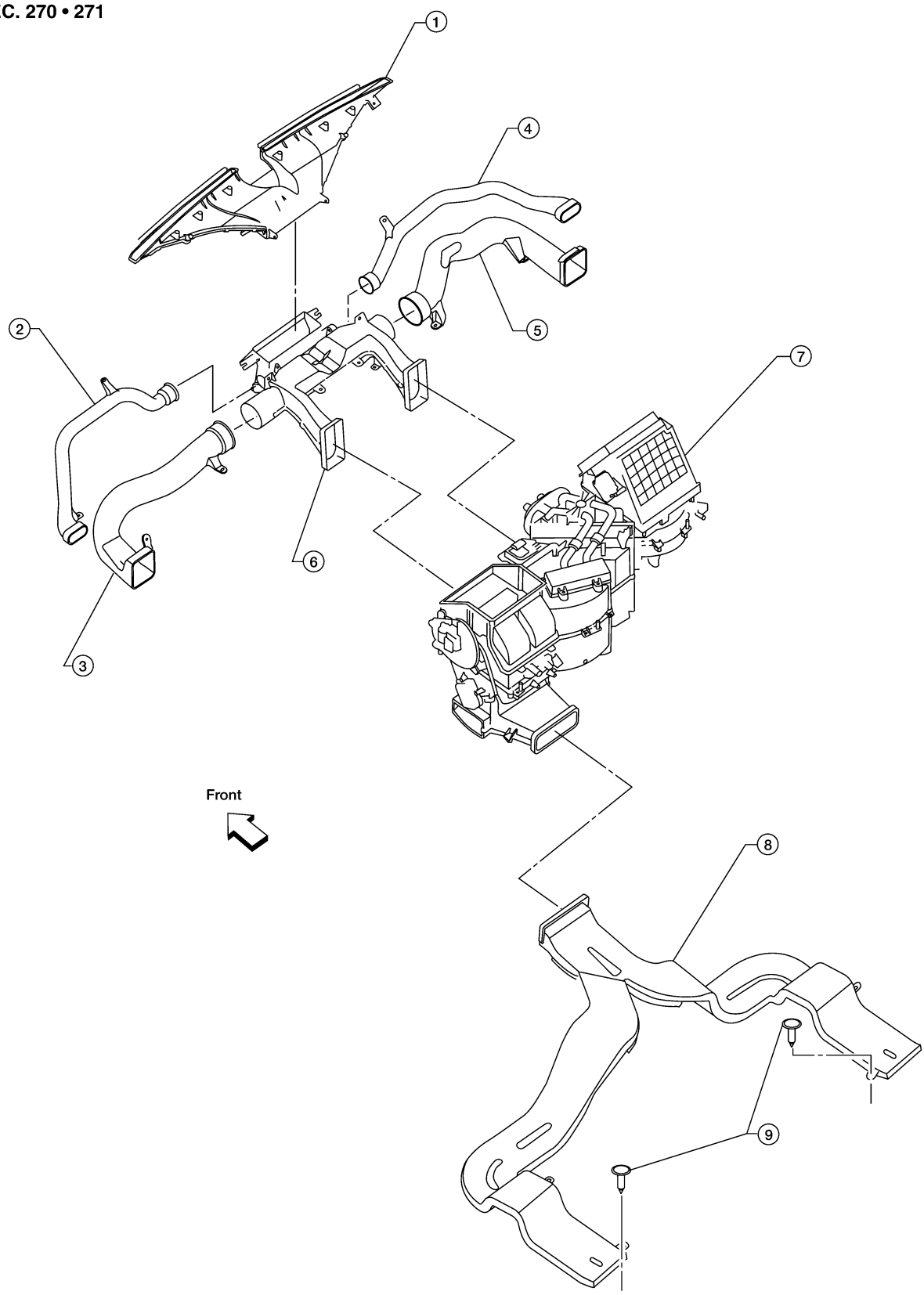

LJIA0141E

1. Defroster nozzle
2. LH side demister duct
3. LH ventilator duct
4. RH side demister duct
5. RH ventilator duct
6. Center ventilator duct
7. Heater and cooling unit assembly
8. Floor duct
9. Clips

Grilles

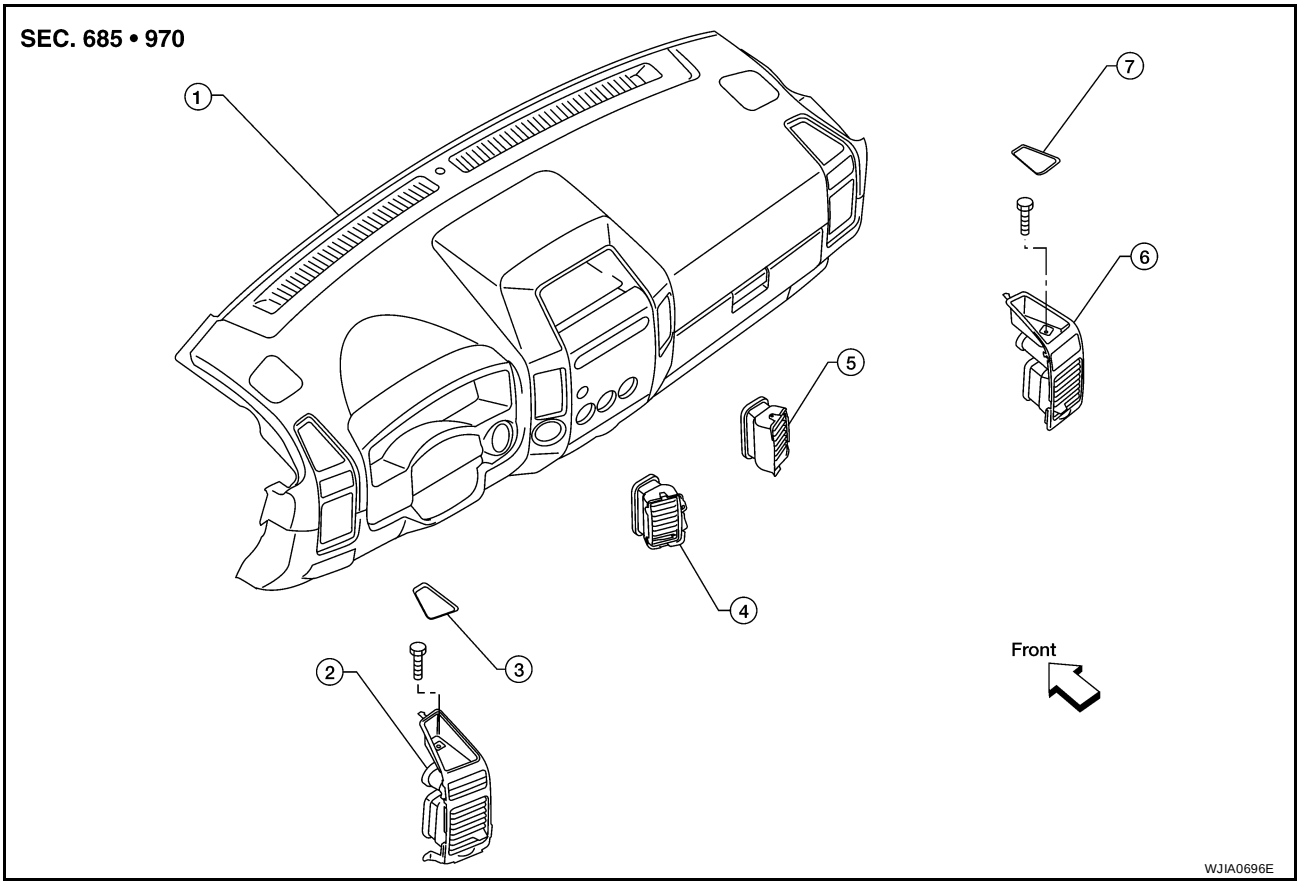

1. Instrument panel
2. Side ventilator assembly LH
3. Storage tray bottom cover (LH)
4. Cluster lid D ventilator LH
5. Cluster lid D ventilator RH
6. Side ventilator assembly RH
7. Storage tray bottom cover (RH)

DEFROSTER NOZZLE

Removal

1. Remove the instrument panel trim. Refer to IP-10, "Removal and Installation" .
2. Remove the heater and cooling unit assembly. Refer to MTC-100, "Removal and Installation" .
3. Remove the defroster nozzle.

Installation

Installation is in the reverse order of removal.

RH AND LH SIDE DEMISTER DUCT

Removal

1. Remove the instrument panel trim. Refer to IP-10, "Removal and Installation" .
2. Remove the heater and cooling unit assembly. Refer to MTC-100, "Removal and Installation" .
3. Remove the RH or LH side demister duct.

Installation

Installation is in the reverse order of removal.

RH AND LH VENTILATOR DUCT

Removal

1. Remove the instrument panel trim. Refer to IP-10, "Removal and Installation" .
2. Remove the heater and cooling unit assembly. Refer to MTC-100, "Removal and Installation" .

3. Remove the RH or LH ventilator duct.

Installation

Installation is in the reverse order of removal.

CENTER VENTILATOR DUCT

Removal

1. Remove the instrument panel trim. Refer to IP-10, "Removal and Installation" .
2. Remove the heater and cooling unit assembly. Refer to MTC-100, "Removal and Installation" .
3. Remove the defroster nozzle.
4. Remove the RH and LH side demister ducts.
5. Remove the RH and LH ventilator ducts.
6. Remove the center ventilator duct.

Installation

Installation is in the reverse order of removal.

FLOOR DUCT

Removal

1. Remove the floor carpet. Refer to EI-41, "FLOOR TRIM" .
2. Remove the two clips and remove the floor duct.

Installation

Installation is in the reverse order of removal.

GRILLES

Removal

1. Remove the interior trim panel as necessary. Refer to EI-36, "BODY SIDE TRIM" or EI-43, "HEADLINING" .
2. Remove the ventilator grille from the interior trim panel.

Installation

Installation is in the reverse order of removal.

REFRIGERANT LINES

PFP:92600

HFC-134a (R-134a) Service Procedure

EJS00337

SETTING OF SERVICE TOOLS AND EQUIPMENT

Discharging Refrigerant

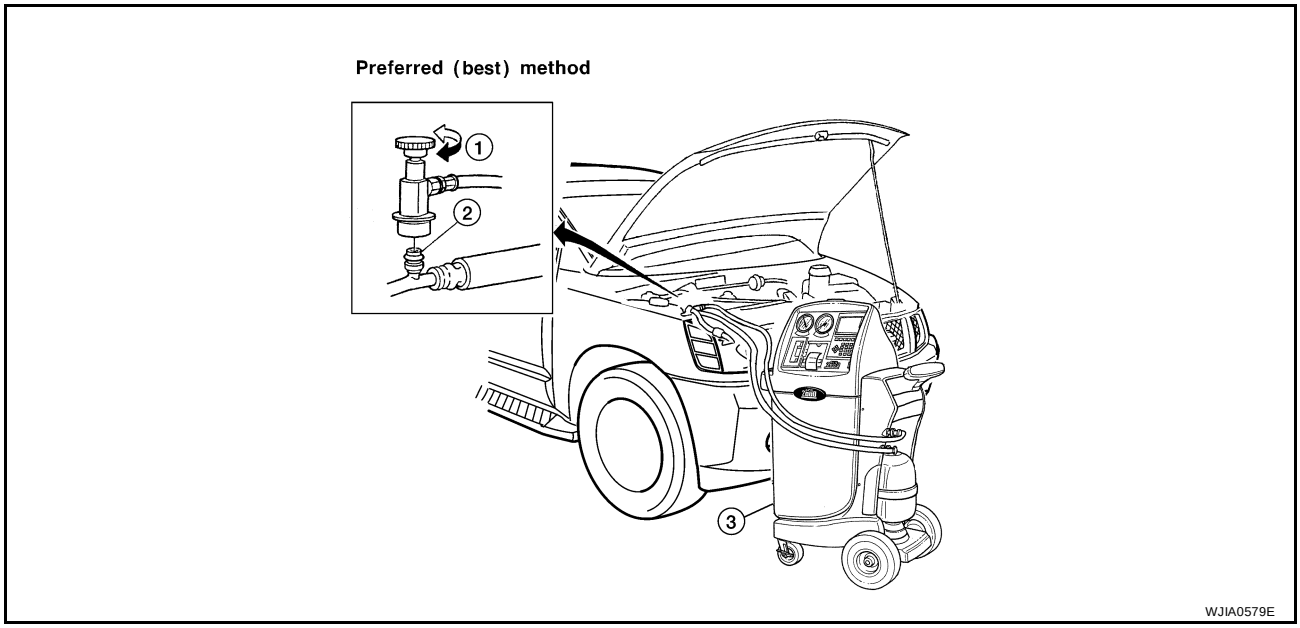

1. Shut-off valve
2. A/C service valve
3. Recovery/recycling equipment

WARNING:

Avoid breathing A/C refrigerant and oil vapor or mist. Exposure may irritate eyes, nose and throat. Remove HFC-134a (R-134a) refrigerant from the A/C system using certified service equipment meeting requirements of SAE J2210 HFC-134a (R-134a) recycling equipment or SAE J2201 HFC-134a (R-134a) recovery equipment. If an accidental system discharge occurs, ventilate the work area before resuming service. Additional health and safety information may be obtained from the refrigerant and oil manufacturers.

Evacuating System and Charging Refrigerant

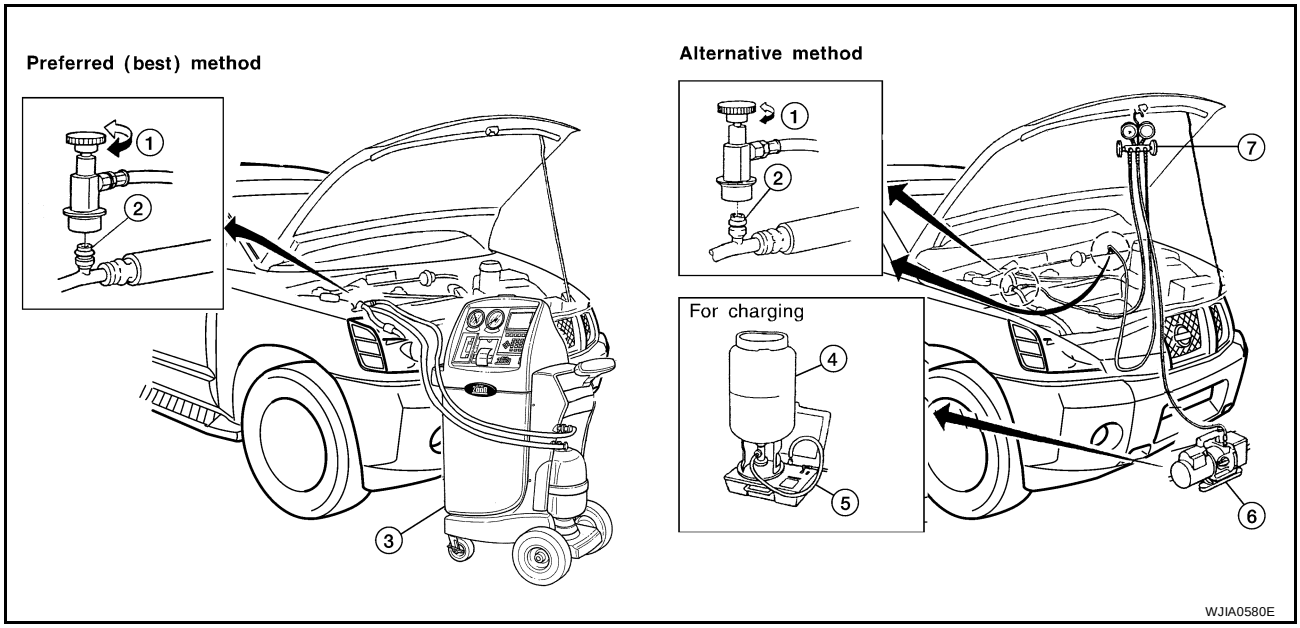

1. Shut-off valve
2. A/C service valve
3. Recovery/recycling equipment
4. Refrigerant container (HFC-134a)
5. Weight scale (J-39650)
6. Evacuating vacuum pump (J-39699)
7. Manifold gauge set (J-39183)

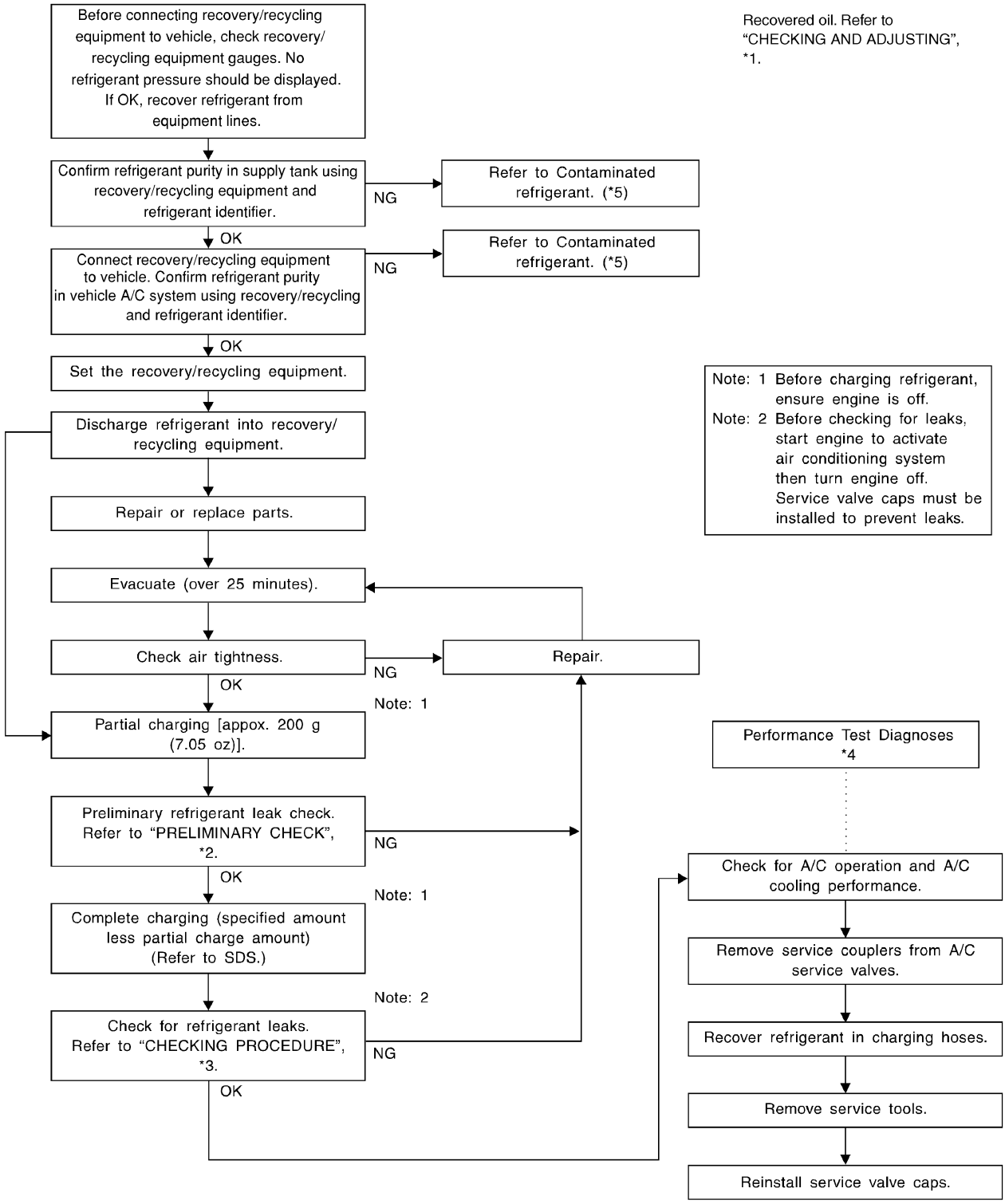

*1 MTC-20, "CHECKING AND ADJUSTING"

*2 MTC-123, "PRELIMINARY CHECK"

*3 MTC-125, "CHECKING PROCEDURE"

*4 MTC-83, "PERFORMANCE TEST DIAGNOSES"

*5 MTC-4, "Contaminated Refrigerant"

Components

EJS00338

A/C Compressor and Condenser

SEC. 214 • 271 • 274 • 276

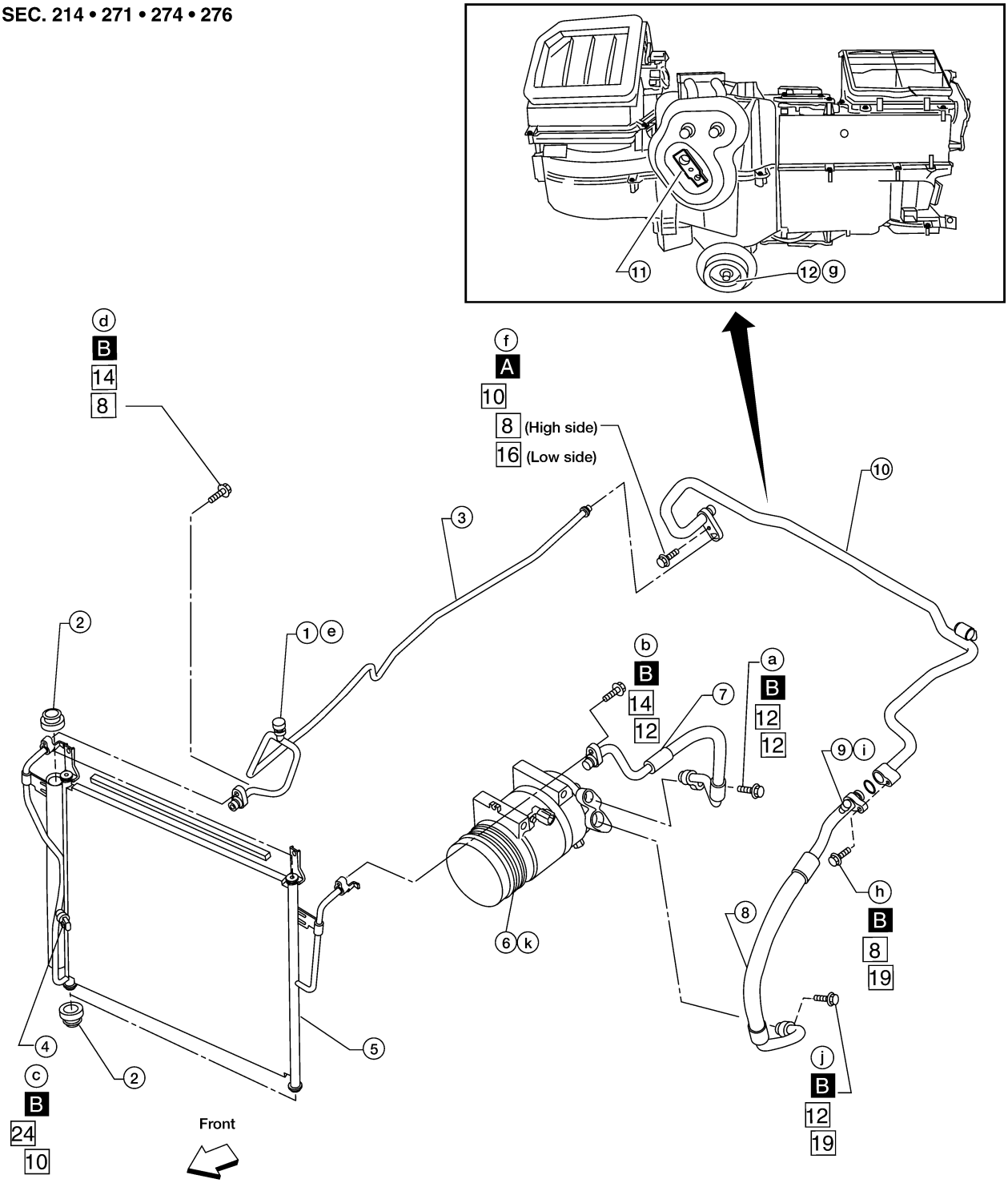

○ : Refrigerant leak checking order (a-k)

□ : Tightening torque

□ □ : Wrench size

□ : O-ring size

: N·m (kg-m, in-lb)

A : 3.4 (0.35 , 30)

B : 9.3 (0.95 , 82)

WJIA1577E

1. High-pressure service valve	2. Grommet	3. High-pressure pipe
4. Refrigerant pressure sensor	5. Condenser	6. Compressor shaft seal
7. High-pressure flexible hose	8. Low-pressure flexible hose	9. Low-pressure service valve
10. Low-pressure pipe	11. Expansion valve	12. Drain hose

NOTE:
Refer to MTC-6, "Precautions for Refrigerant Connection" .

Removal and Installation for Compressor

EJS00339

A/C Compressor Mounting

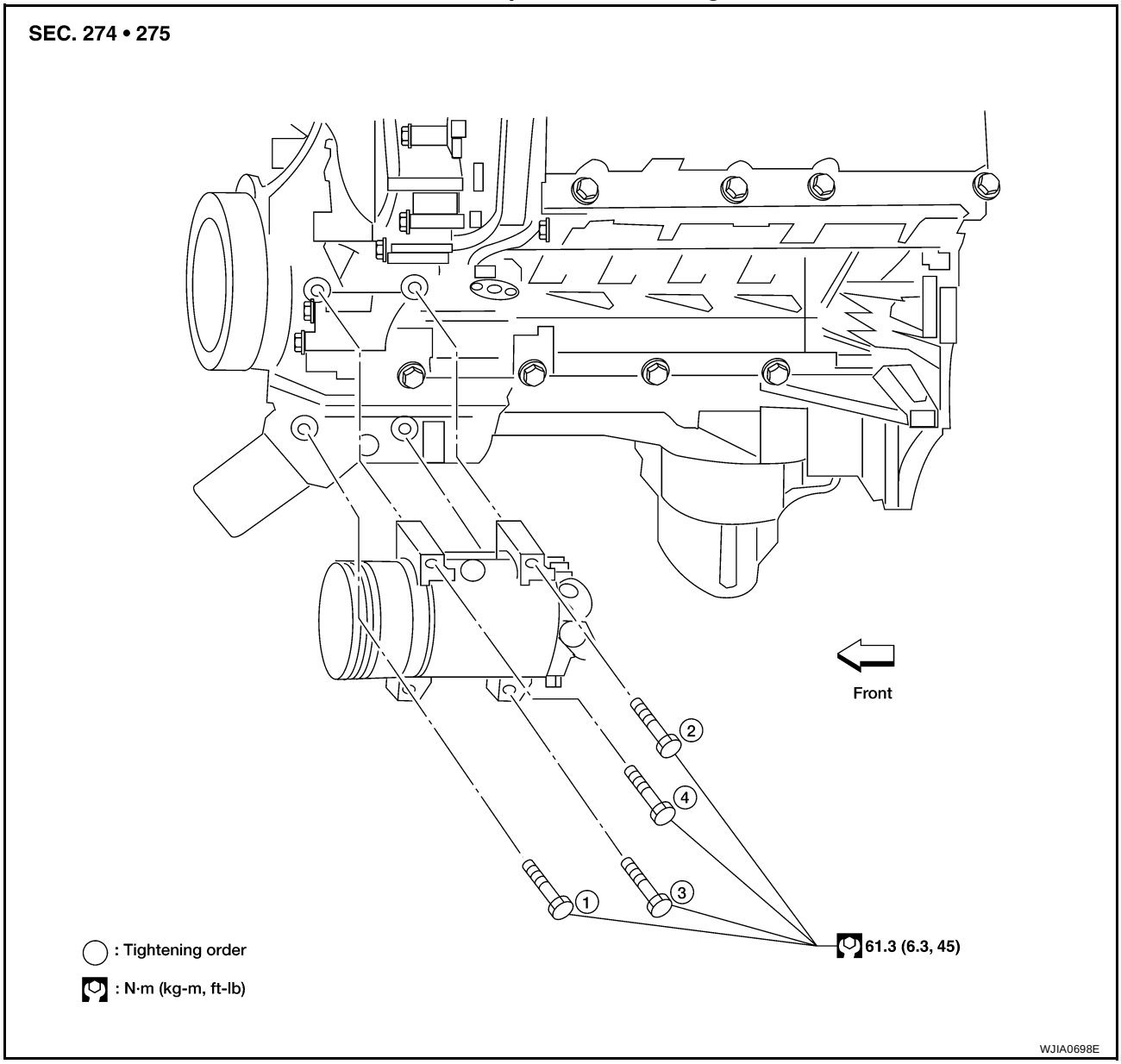

REMOVAL

1. Discharge the refrigerant. Refer to MTC-112, "HFC-134a (R-134a) Service Procedure" .
2. Remove the front right wheel and tire assembly. Refer to WT-8, "Rotation" .
3. Remove the engine under cover and the splash shield using power tool.
4. Remove the engine air cleaner and air ducts. Refer to EM-15, "AIR CLEANER AND AIR DUCT" .
5. Remove the drive belt. Refer to EM-13, "DRIVE BELTS" .
6. Disconnect the compressor electrical connector.
7. Disconnect the high-pressure flexible hose and low-pressure flexible hose from the compressor.

CAUTION:
Cap or wrap the joint of the pipe with suitable material such as vinyl tape to avoid the entry of air.

8. Remove the compressor bolts and nut using power tools.

INSTALLATION

Installation is in the reverse order of removal.

CAUTION:

- **Replace the O-ring of the low-pressure flexible hose and high-pressure flexible hose with a new one, apply compressor oil to them when installing them.**
- **After recharging the A/C system with refrigerant, check for leaks.**

Removal and Installation for Compressor Clutch

EJS0033A

Magnet Clutch Assembly

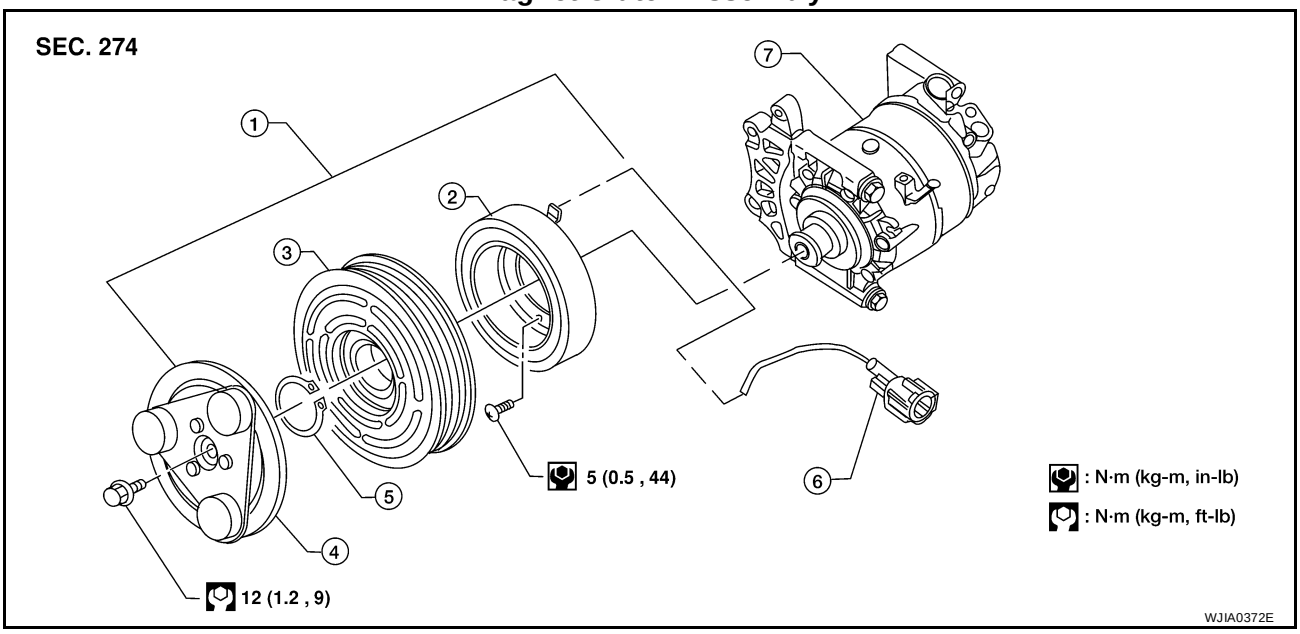

1. Magnet clutch assembly	2. Magnet coil	3. Pulley
4. Clutch disc	5. Snap ring	6. Thermal protector (built in)
7. Compressor		

REMOVAL

1. Remove the compressor. Refer to MTC-115, "Removal and Installation for Compressor" .
2. Remove the center bolt while holding the clutch disc stationary using Tool as shown.

   Tool number : J-44614

3. Remove the clutch disc.

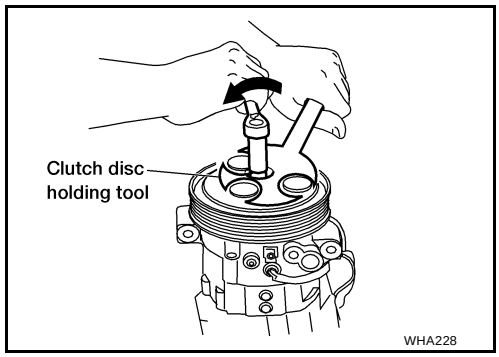

4. Remove the snap ring using external snap ring pliers or suitable tool.

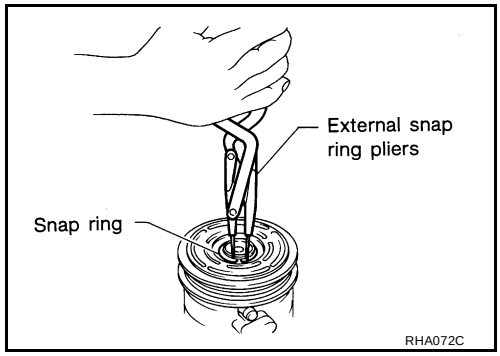

5. Remove the pulley using Tool with a small adapter. Position the small adapter on the end of the drive shaft and the center of the puller on the small adapter.

   Tool number : KV99233130 (J-29884)

   CAUTION:
   To prevent deformation of the pulley groove, the puller claws should be hooked under the pulley groove and not into the pulley groove.

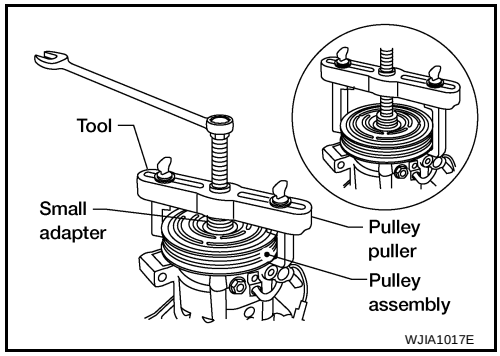

6. Remove the magnet coil harness clip using a screwdriver, remove the three magnet coil fixing screws and remove the magnet coil.

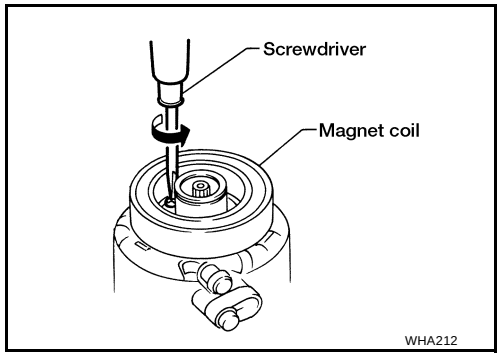

INSPECTION

Clutch Disc

If the contact surface shows signs of damage due to excessive heat, replace clutch disc and pulley.

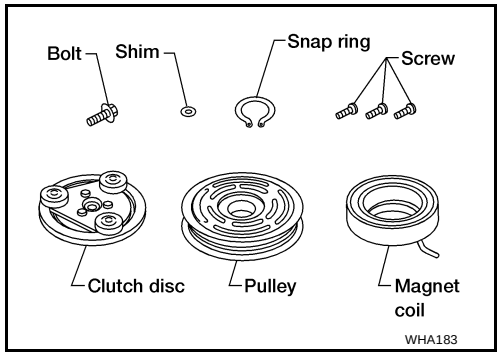

Pulley

Check the appearance of the pulley assembly. If contact surface of pulley shows signs of excessive grooving, replace clutch disc and pulley. The contact surfaces of the pulley assembly should be cleaned with a suitable solvent before reinstallation.

Coil

Check magnet coil for loose connections or any cracked insulation.

INSTALLATION

1. Install the magnet coil.

   CAUTION:
   Be sure to align the magnet coil pin with the hole in the compressor front head.

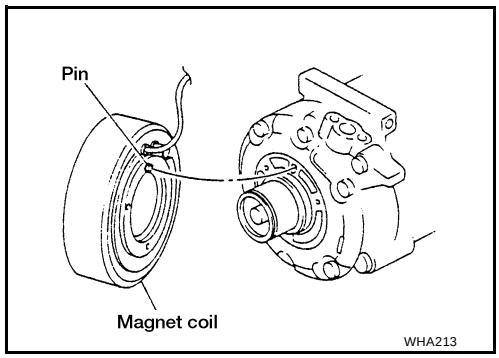

2. Install the magnet coil harness clip using a screwdriver.
3. Install the pulley assembly using Tool and a wrench, then install the snap ring using snap ring pliers.

   Tool number : — (J-38873-A)

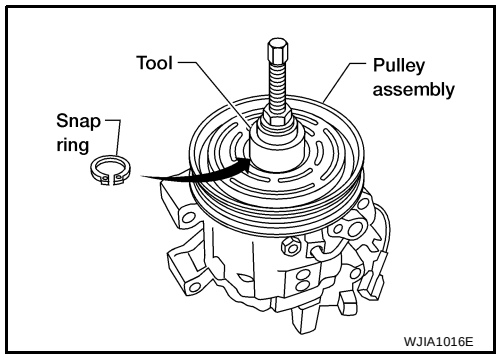

4. Install the clutch disc on the compressor shaft, together with the original shim(s). Press the clutch disc down by hand.

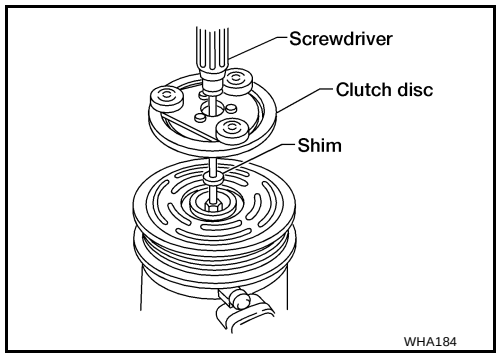

5. Install the clutch pulley bolt using Tool, to prevent the clutch disc from turning and tighten the bolt to specification.

   Tool number : J-44614

   CAUTION:
   After tightening the clutch pulley bolt, check that the clutch pulley rotates smoothly.

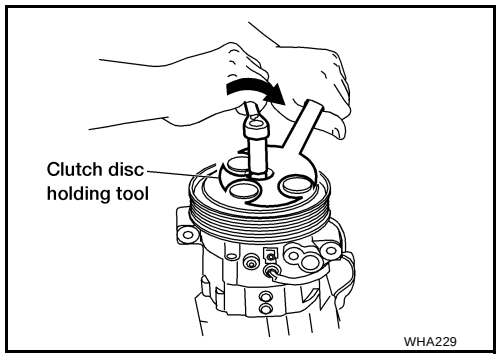

6. Check the pulley clearance all the way around the clutch disc as shown.

   Clutch disc-to-pulley clearance : 0.3 - 0.6 mm (0.012 - 0.024 in)

7. If the specified clearance is not obtained, replace the adjusting spacer to readjust.
8. Connect the compressor electrical connector.
9. Install the drive belt. Refer to EM-13, "DRIVE BELTS" .
10. Install the engine under cover and the splash shield.

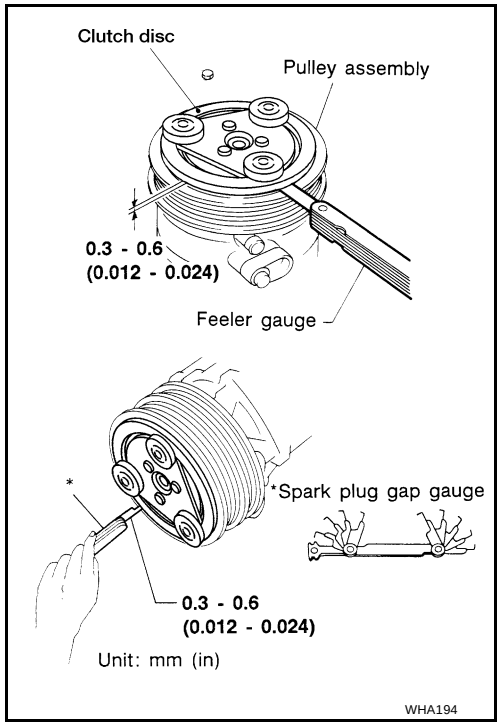

BREAK-IN OPERATION

When replacing compressor clutch assembly, always conduct the break-in operation. This is done by engaging and disengaging the clutch about 30 times. Break-in operation raises the level of transmitted torque.

Removal and Installation for Low-pressure Flexible Hose

EJS0033B

REMOVAL

1. Remove the engine room cover using power tool.
2. Remove the engine air cleaner and air ducts. Refer to EM-15, "AIR CLEANER AND AIR DUCT" .
3. Discharge the refrigerant. Refer to MTC-112, "HFC-134a (R-134a) Service Procedure" .

   CAUTION:
   Cap or wrap the joint of the pipe with suitable material such as vinyl tape to avoid the entry of air.
4. Remove the low-pressure flexible hose.

INSTALLATION

Installation is in the reverse order of removal.
Refer to MTC-114, "Components" .

CAUTION:

- **Replace the O-ring of the low-pressure flexible hose with a new one, then apply compressor oil to it when installing it.**
- **After charging refrigerant, check for leaks.**

Removal and Installation for High-pressure Flexible Hose

EJS0033C

REMOVAL

1. Remove the engine under cover using power tool.
2. Remove the engine air cleaner and air ducts. Refer to EM-15, "AIR CLEANER AND AIR DUCT" .
3. Discharge the refrigerant. Refer to MTC-112, "HFC-134a (R-134a) Service Procedure" .
4. Remove the high-pressure flexible hose.

   CAUTION:
   Cap or wrap the joint of the pipe with suitable material such as vinyl tape to avoid the entry of air.

INSTALLATION

Installation is in the reverse order of removal.
Refer to MTC-114, "Components" .

CAUTION:
- **Replace the O-ring of the high-pressure flexible hose with a new one, then apply compressor oil to it when installing it.**
- **After charging refrigerant, check for leaks.**

Removal and Installation for High-pressure Pipe

EJS0033D

REMOVAL

1. Disconnect the battery negative terminal and battery positive terminal.
2. Reposition the IPDM E/R aside.
3. Remove the front right wheel and tire assembly. Refer to WT-8, "Rotation" .
4. Position aside the front floor insulator.
5. Discharge the refrigerant. Refer to MTC-112, "HFC-134a (R-134a) Service Procedure" .
6. Remove the low pressure pipe.
7. Remove the high-pressure pipe.

   CAUTION:
   Cap or wrap the joint of the pipe with suitable material such as vinyl tape to avoid the entry of air.

INSTALLATION

Installation is in the reverse order of removal.
Refer to MTC-114, "Components" .

CAUTION:
- **Replace the O-ring of the high-pressure pipe with a new one, then apply compressor oil to it when installing it.**
- **After charging refrigerant, check for leaks.**

Removal and Installation for Low-pressure Pipe

EJS0033E

REMOVAL

1. Discharge the refrigerant. Refer to MTC-112, "HFC-134a (R-134a) Service Procedure" .
2. Remove the low-pressure pipe.

   CAUTION:
   Cap or wrap the joint of the pipes with suitable material such as vinyl tape to avoid the entry of air.

INSTALLATION

Installation is in the reverse order of removal.
Refer to MTC-114, "Components" .

CAUTION:
- **Replace the O-ring of the high/low-pressure pipe with a new one, then apply compressor oil to it when installing it.**
- **After charging refrigerant, check for leaks.**

Removal and Installation for Refrigerant Pressure Sensor

EJS0033F

REMOVAL

1. Disconnect the refrigerant pressure sensor electrical connector.
2. Disconnect the refrigerant pressure sensor electrical connector and remove the refrigerant pressure sensor from the condenser.

   CAUTION:
   Be careful not to damage the condenser fins.

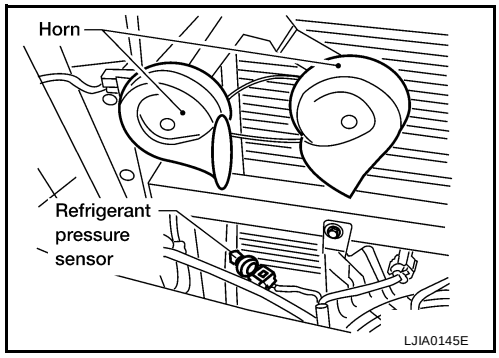

INSTALLATION

Installation is in the reverse order of removal.
Refer to MTC-114, "Components" .

CAUTION:
- **Be careful not to damage the condenser fins.**
- **Replace the O-ring of the refrigerant pressure sensor with a new one, then apply compressor oil to it when installing it.**
- **After charging refrigerant, check for leaks.**

Removal and Installation for Condenser

EJS0033G

REMOVAL

1. Discharge the refrigerant. Refer to MTC-112, "HFC-134a (R-134a) Service Procedure" .
2. Remove the radiator. Refer to CO-14, "RADIATOR" .

   CAUTION:
   Be careful not to damage the core surface of the condenser and the radiator.
3. Disconnect the high-pressure flexible hose and the high-pressure pipe from the condenser.

   CAUTION:
   Cap or wrap the joint of the pipe with suitable material such as vinyl tape to avoid the entry of air.
4. Disconnect the refrigerant pressure sensor connector.
   - Remove the refrigerant pressure sensor from the condenser as necessary.
5. Lift the condenser out of the mounting grommets to remove the condenser.

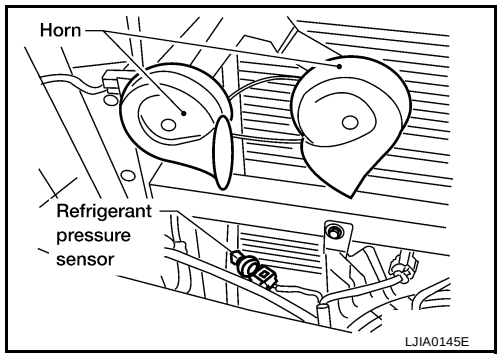

INSTALLATION

Installation is in the reverse order of removal.

CAUTION:
- **Replace the O-rings of the high-pressure pipe, refrigerant pressure sensor, and high-pressure flexible hose with new ones, then apply compressor oil to them when installing them.**
- **Replace the grommets as necessary.**
- **After charging refrigerant, check for leaks.**

Removal and Installation for Evaporator

EJS0033H

Heater and Cooling Unit Assembly

SEC. 271

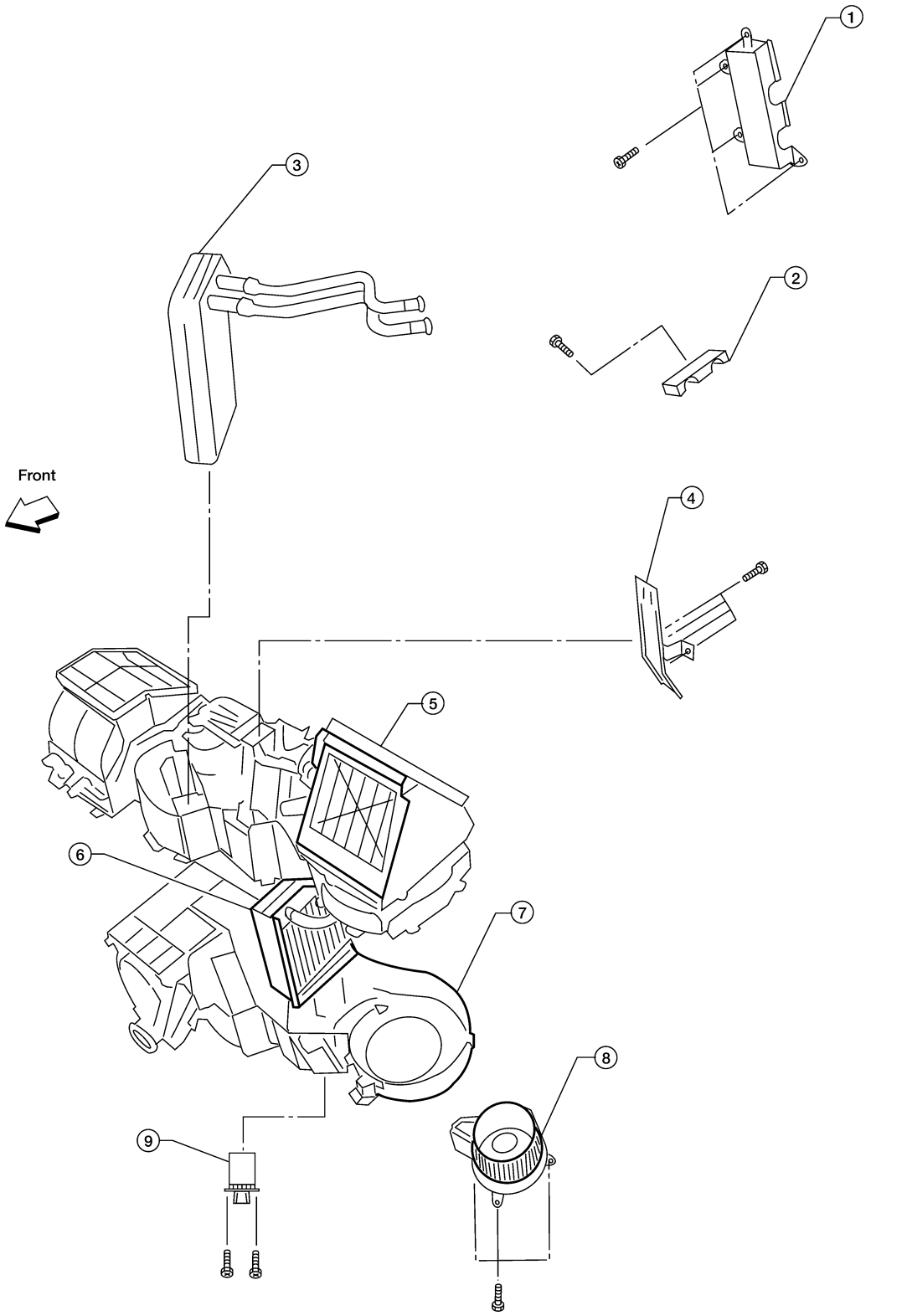

1.	Heater core cover	2.	Heater core pipe bracket	3.	Heater core
4.	Upper bracket	5.	Upper heater and cooling unit case	6.	A/C evaporator
7.	Lower heater and cooling unit case	8.	Blower motor	9.	Variable blower control

REMOVAL

1. Remove the heater core. Refer to MTC-102, "Removal and Installation" .

2. Remove the defroster mode door arm.
3. Separate the heater core and cooling unit case.
4. Remove the evaporator.

INSTALLATION

Installation is in the reverse order of removal.

CAUTION:

Replace the O-rings on the low-pressure flexible hose and the high-pressure pipe with new ones, then apply compressor oil to them when installing them.

Removal and Installation for Expansion Valve

EJS0033I

REMOVAL

1. Discharge the refrigerant. Refer to MTC-112, "HFC-134a (R-134a) Service Procedure" .
2. Remove the evaporator. Refer to MTC-122, "Removal and Installation for Evaporator" .
3. Remove the cooler grommet.
4. Remove the expansion valve.

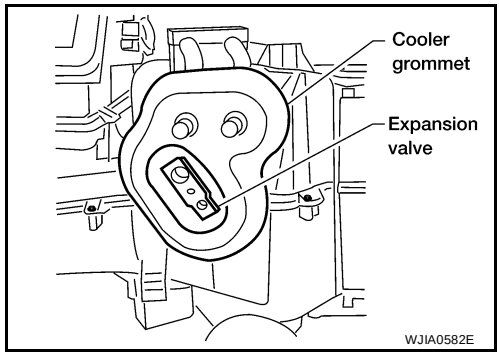

INSTALLATION

Installation is in the reverse order of removal.

Expansion valve bolts	**: 4 N·m (0.41 kg-m, 35 in-lb)**
A/C refrigerant pipe to expansion valve bolt	**: Refer to MTC-114, "Components" .**

CAUTION:

- **Replace the O-rings on the A/C refrigerant pipes with new ones, then apply compressor oil to them when installing them.**
- **After charging refrigerant, check for leaks.**

Checking for Refrigerant Leaks

EJS0033J

PRELIMINARY CHECK

Perform a visual inspection of all refrigeration parts, fittings, hoses and components for signs of A/C oil leakage, damage, and corrosion. Any A/C oil leakage may indicate an area of refrigerant leakage. Allow extra inspection time in these areas when using either an electronic refrigerant leak detector (J-41995) or fluorescent dye leak detector (J-42220).

If any dye is observed using a fluorescent dye leak detector (J-42220), confirm the leak using a electronic refrigerant leak detector (J-41995). It is possible that the dye is from a prior leak that was repaired and not properly cleaned.

When searching for leaks, do not stop when one leak is found but continue to check for additional leaks at all system components and connections.

When searching for refrigerant leaks using an electronic refrigerant leak detector (J-41995), move the probe along the suspected leak area at 25 - 50 mm (1 - 2 in) per second and no further than 6 mm (1/4 in) from the component.

CAUTION:

Moving the electronic refrigerant leak detector probe slower and closer to the suspected leak area will improve the chances of finding a leak.

Checking System for Leaks Using the Fluorescent Dye Leak Detector

EJS0033K

1. Check the A/C system for leaks using the fluorescent dye leak detector and safety goggles (J-42220) in a low sunlight area (area without windows preferable). Illuminate all components, fittings and lines. The dye

will appear as a bright green/yellow area at the point of leakage. Fluorescent dye observed at the evaporator drain opening indicates an evaporator core assembly leak (tubes, core or expansion valve).

2. If the suspected area is difficult to see, use an adjustable mirror or wipe the area with a clean shop rag or cloth, then inspect the shop rag or cloth with the fluorescent dye leak detector (J-42220) for dye residue.
3. After the leak is repaired, remove any residual dye using refrigerant dye cleaner (J-43872) to prevent future misdiagnosis.
4. Perform a system performance check and then verify the leak repair using a electronic refrigerant leak detector (J-41995).

   NOTE:
   - Other gases in the work area or substances on the A/C components, for example, anti-freeze, windshield washer fluid, solvents and oils, may falsely trigger the leak detector. Make sure the surfaces to be checked are clean.
   - Clean with a dry cloth or blow off with shop air.
   - Do not allow the sensor tip of the electronic refrigerant leak detector (J-41995) to contact with any substance. This can also cause false readings and may damage the detector.

Dye Injection

EJS0033L

NOTE:
This procedure is only necessary when recharging the system or when the compressor has seized and must be replaced.

1. Check the A/C system static (at rest) pressure. Pressure must be at least 345 kPa (3.52 kg-cm^2 , 50 psi).
2. Pour one bottle 7.4 cc (1/4 ounce) of the HFC-134a (R-134a) fluorescent leak detection dye (J-41447) into the HFC-134a (R-134a) dye injector (J-41459).

   CAUTION:
   If repairing the A/C system or replacing a component, pour the HFC-134a (R-134a) fluorescent leak detection dye (J-41447) directly into the open system connection and proceed with the service procedures.
3. Connect the refrigerant dye injector (J-41459) to the low-pressure service valve.
4. Start the engine and switch the A/C system ON.
5. When the A/C system is operating (compressor running), inject one bottle 7.4 cc (1/4 ounce) of HFC-134a (R-134a) fluorescent leak detection dye (J-41447) through the low-pressure service valve using HFC-134a (R-134a) dye injector (J-41459). Refer to the manufacturer's operating instructions.
6. With the engine still running, disconnect the HFC-134a (R-134a) dye injector (J-41459) from the low-pressure service valve.
7. Operate the A/C system for a minimum of 20 minutes to mix the HFC-134a (R-134a) fluorescent leak detection dye (J-41447) with the A/C system oil. Depending on the leak size, operating conditions and location of the leak, it may take from minutes to days for the HFC-134a (R-134a) fluorescent leak detection dye to penetrate an A/C system leak and become visible.

Electronic Refrigerant Leak Detector

EJS0033M

PRECAUTIONS FOR HANDLING LEAK DETECTOR

NOTE:
When performing a refrigerant leak check, use a electronic refrigerant leak detector (J-41995) or equivalent. Ensure that the electronic refrigerant leak detector (J-41995) is calibrated and set properly according to the manufacturer's operating instructions.

The electronic refrigerant leak detector (J-41995) is a delicate device. To use the electronic refrigerant leak detector (J-41995) properly, read the manufacturer's operating instructions and perform any specified maintenance.

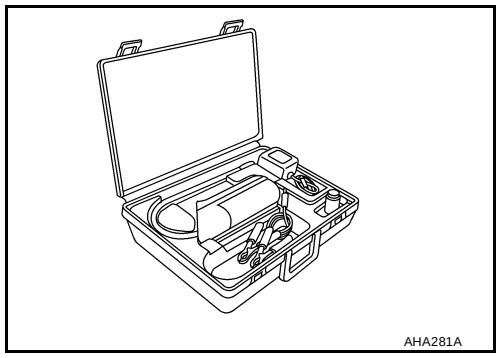

1. Position the probe approximately 5 mm (3/16 in) away from the point to be checked as shown.

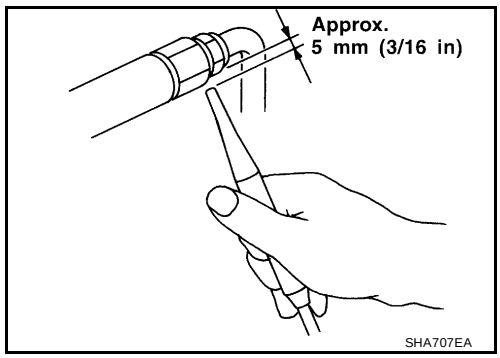

2. When checking for leaks, circle each fitting completely with the probe as shown.

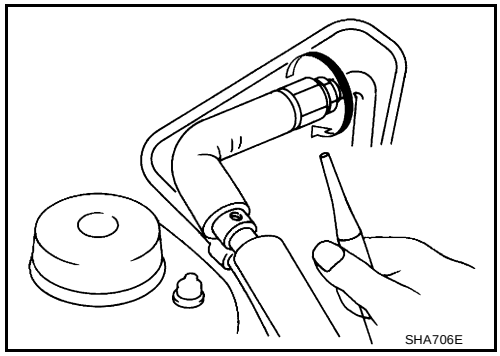

3. Move the probe along each component at a speed of approximately 25 - 50 mm (1 - 2 in)/second as shown.

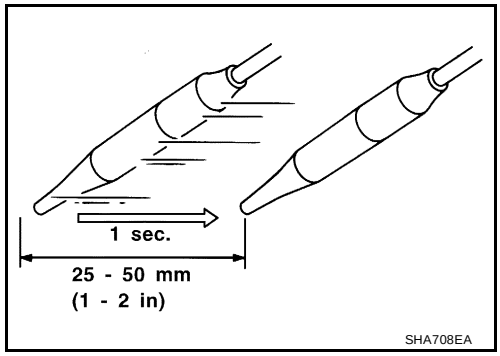

CHECKING PROCEDURE

NOTE:
To prevent inaccurate or false readings, make sure there is no refrigerant vapor, shop chemicals, or cigarette smoke in the vicinity of the vehicle. Perform the leak test in a calm area (low air/wind movement) so that the leaking refrigerant is not dispersed.

1. Turn the engine OFF.
2. Connect the manifold gauge set (J-39183-C) to the A/C service ports. Refer to MTC-112, "SETTING OF SERVICE TOOLS AND EQUIPMENT" .
3. Check if the A/C refrigerant pressure is at least 345 kPa (3.52 kg/cm^2 , 50 psi) above a temperature of 16°C (61°F). If less than specification, recover/evacuate and recharge the system with the specified amount of refrigerant. Refer to MTC-112, "HFC-134a (R-134a) Service Procedure" .

   NOTE:
   At temperatures below 16°C (61°F), leaks may not be detected since the system may not reach 345 kPa (3.52 kg/cm^2 , 50 psi) pressure.
4. Perform the leak test from the high-pressure side (A/C compressor discharge “a” to evaporator inlet “f”) to the low-pressure side (evaporator drain hose “g” to compressor shaft seal “k”). Refer to MTC-114, "Components" . Clean the component to be checked and carefully move the electronic refrigerant leak detector probe completely around the following connections and components.
   - Check the compressor shaft seal
   - Check the high and low-pressure pipe and hose fittings, and relief valve
   - Check the liquid tank

- Check the refrigerant pressure sensor
- Check all around the service valves. Ensure service valve caps are secured on the service valves (to prevent leaks).

  NOTE:
  After removing manifold gauge set (J-39183-C) from the service valves, wipe any residue from the service valves to prevent any false readings by the electronic refrigerant leak detector (J-41995).
- Evaporator
  With engine OFF, turn blower fan on “High” for at least 15 seconds to dissipate any refrigerant trace in the heater and cooling unit assembly. Wait a minimum of 10 minutes accumulation time (refer to the manufacturer's recommended procedure for actual wait time) before inserting the electronic refrigerant leak detector probe into the heater and cooling unit assembly drain hose.

  NOTE:
  Keep the probe inserted for at least 10 seconds. Use caution not to contaminate the probe tip with water or dirt that may be in the drain hose.

5. If a leak is detected, verify at least once by blowing compressed air into the area of the suspected leak, then repeat the leak check.
6. Do not stop when one leak is found. Continue to check for additional leaks at all system components and connections.
7. If no leaks are found, perform steps 8 - 11.
8. Start the engine.
9. Set the heater A/C controls as follows:

a. A/C switch to ON
b. Air flow to VENT mode
c. Intake position to RECIRCULATION mode
d. Temperature to MAX cold
e. Blower fan speed to HIGH

10. Run the engine at 1,500 rpm for at least 2 minutes.
11. Turn the engine OFF and perform the leak check again following steps 4 through 6 above.
    Refrigerant leaks should be checked immediately after turning the engine OFF. Begin with the leak detector at the compressor. The pressure on the high pressure side will gradually drop after the refrigerant circulation stops and pressure on the low pressure side will gradually rise, as shown in the graph. Some leaks are more easily detected when the pressure is high.

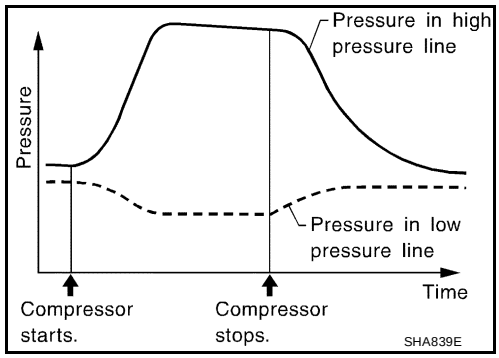

12. Before connecting the recovery/recycling equipment to the vehicle, check the recovery/recycling equipment gauges. No refrigerant pressure should be displayed. If pressure is displayed, recover the refrigerant from the equipment lines and then check the refrigerant purity.
13. Confirm refrigerant purity in supply tank using recovery/recycling equipment and refrigerant identifier equipment.
14. Confirm the refrigerant purity in the vehicle's A/C system using recovery/recycling equipment and refrigerant identifier equipment.
15. Discharge the A/C system using recovery/recycling equipment. Repair the leaking fitting or component as necessary.
16. Evacuate and recharge the A/C system and perform the leak test to confirm that there are no refrigerant leaks.
17. Conduct the Operational Check to ensure system works properly. Refer to MTC-46, "Operational Check" .

SERVICE DATA AND SPECIFICATIONS (SDS)

PFP:00030

Service Data and Specifications (SDS)

EJS0033N

COMPRESSOR

Make	ZEXEL VALEO CLIMATE CONTROL
Model	DKS-17D
Type	Swash plate
Displacement	175.5 cm^3 (10.7 in^3) / revolution
Cylinder bore × stroke	30.5 mm (1.20 in) x 24.0 mm (0.94 in)
Direction of rotation	Clockwise (viewed from drive end)
Drive belt	Poly V

OIL

Name	NISSAN A/C System Oil Type S (DH-PS)
Part number	KLH00-PAGS0
Capacity	200 mℓ (6.8 US fl oz, 7.0 Imp fl oz)

REFRIGERANT

Type	HFC-134a (R-134a)
Capacity	0.70 ± 0.05 kg (1.54 ± 0.11 lb)

ENGINE IDLING SPEED

Refer to EC-630, "Idle Speed and Ignition Timing" .

BELT TENSION

Refer to EM-13, "Checking Drive Belts" .