BRAKE SYSTEM

SECTION BR

CONTENTS

CONTENTS (Cont'd)

Supplemental Restraint System (SRS) "AIR BAG" and "SEAT BELT PRE-TENSIONER"

NGBR0001

The Supplemental Restraint System such as "AIR BAG" and "SEAT BELT PRE-TENSIONER" used along with a seat belt, helps to reduce the risk or severity of injury to the driver and front passenger for certain types of collision. The Supplemental Restraint System consists of driver air bag module (located in the center of the steering wheel), front passenger air bag module (located on the instrument panel on passenger side), seat belt pre-tensioners, a diagnosis sensor unit, warning lamp, wiring harness and spiral cable.
Information necessary to service the system safely is included in the **RS section** of this Service Manual.

WARNING:

- **To avoid rendering the SRS inoperative, which could increase the risk of personal injury or death in the event of a collision which would result in air bag inflation, all maintenance should be performed by an authorized NISSAN dealer.**
- **Improper maintenance, including incorrect removal and installation of the SRS, can lead to personal injury caused by unintentional activation of the system. For removal of Spiral Cable and Air Bag Module, see the RS section.**
- **Do not use electrical test equipment on any circuit related to the SRS unless instructed to in this Service Manual. SRS wiring harnesses can be identified by yellow and/or orange harness connectors.**

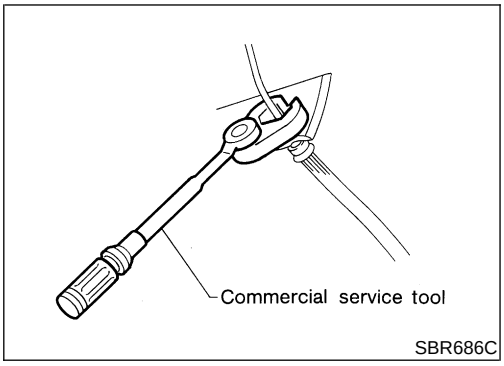

Precautions for Brake System

NGBR0002

- **Use brake fluid "DOT 3".**
- **Never reuse drained brake fluid.**
- **Be careful not to splash brake fluid on painted areas; it may cause paint damage. If brake fluid is splashed on painted areas, wash it away with water immediately.**
- **To clean master cylinder parts, disc brake caliper parts or wheel cylinder parts, use clean brake fluid.**
- **Never use mineral oils such as gasoline or kerosene. They will ruin rubber parts of hydraulic system.**
- **Use flare nut wrench when removing and installing brake tubes.**
- **Always torque brake lines when installing.**

WARNING:

- **Clean brakes with a vacuum dust collector to minimize risk of health hazard from powder caused by friction.**

Wiring Diagrams and Trouble Diagnosis

NGBR0003

When you read wiring diagrams, refer to the followings:

- ***GI-10***,"HOW TO READ WIRING DIAGRAMS".
- ***EL-10***, "POWER SUPPLY ROUTING" for power distribution circuit.

When you perform trouble diagnosis, refer to the followings:

- ***GI-33***, "How To Follow Test Group In Trouble Diagnoses".
- ***GI-22***, "HOW TO PERFORM EFFICIENT DIAGNOSIS FOR AN ELECTRICAL INCIDENT".

Special Service Tools

NGBR0004

The actual shapes of Kent-Moore tools may differ from those of special service tools illustrated here.

Tool number (Kent-Moore No.) Tool name	Description	
KV40106500 (JS25852-B) Wheel bearing puller	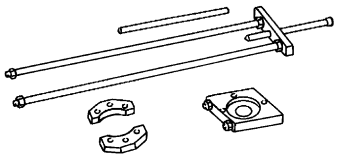 NT724	Removing rear wheel sensor rotor

Commercial Service Tools

NGBR0005

Tool name	Description	
1 Flare nut crowfoot 2 Torque wrench	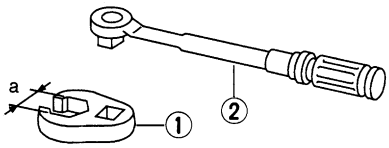 NT360	Removing and installing each brake piping **a: 10 mm (0.39 in)**
Brake fluid pressure gauge	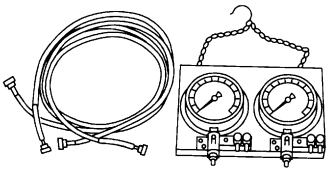 NT151	Measuring brake fluid pressure
Rear wheel sensor rotor drift	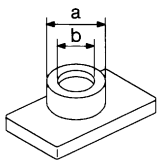 NT509	Installing rear wheel sensor rotor **a: 75 mm (2.95 in) dia.** **b: 63 mm (2.48 in) dia.**

NVH Troubleshooting Chart

NGBR0085S01

Use the chart below to help you find the cause of the symptom. If necessary, repair or replace these parts.

Reference page			BR-25	BR-19, 25	BR-23	BR-19	—	—	BR-21, 25	—	—	—	BR-21	BR-25	NVH, ***PD-4***.	NVH, ***PD-16***, ***PD-42*** ***PD-66***.	NVH, ***AX-4***.	NVH, ***AX-4***.	NVH, ***SU-3***.	NVH, ***SU-3***.	NVH, ***SU-3***.	NVH, ***ST-5***.
Possible cause and SUSPECTED PARTS			Linings or pads - damaged	Linings or pads - uneven wear	Return spring damaged	Shims damaged	Rotor or drum imbalance	Rotor or drum damage	Rotor or drum runout	Rotor or drum deformation	Rotor or drum deflection	Rotor or drum rust	Rotor thickness variation	Drum out of round	PROPELLER SHAFT	DIFFERENTIAL	DRIVE SHAFT	AXLE	SUSPENSION	TIRES	ROAD WHEEL	STEERING
Symp-tom	BRAKE	Noise	×	×	×	×									×	×	×	×	×	×	×	×
		Shake					×								×		×	×	×	×	×	×
		Shimmy, Jud-der					×	×	×	×	×	×	×	×				×	×	×	×	×

×: Applicable

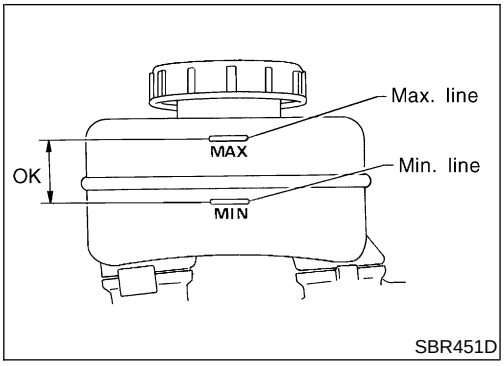

SBR451D

Checking Brake Fluid Level

NGBR0006

- Check fluid level in reservoir tank. It should be between Max and Min lines on reservoir tank.
- If fluid level is extremely low, check brake system.
- If the brake warning lamp comes on, check brake fluid level switch and parking brake switch.

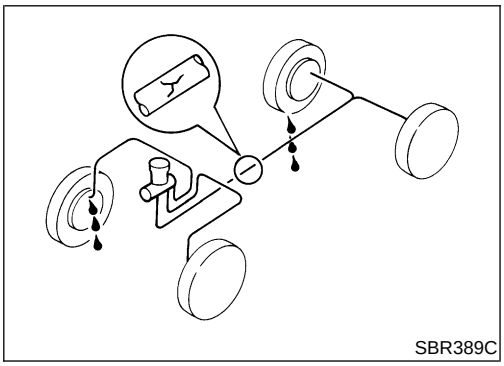
SBR389C

Checking Brake Line

NGBR0007

CAUTION:

If leakage occurs around joints, retighten or, if necessary, replace damaged parts.

1. Check brake lines (tubes and hoses) for cracks, deterioration and other damage. Replace any damaged parts.
2. Check for oil leakage by fully depressing brake pedal while engine is running.

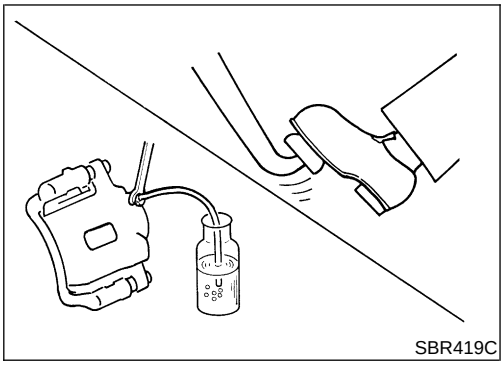
SBR419C

Changing Brake Fluid

NGBR0008

CAUTION:

- **Refill with new brake fluid “DOT 3”.**
- **Always keep fluid level higher than minimum line on reservoir tank.**
- **Never reuse drained brake fluid.**
- **Be careful not to splash brake fluid on painted areas; it may cause paint damage. If brake fluid is splashed on painted areas, wash it away with water immediately.**

1. Clean inside of reservoir tank, and refill with new brake fluid.
2. Connect a vinyl tube to each air bleeder valve.
3. Drain brake fluid from each air bleeder valve by depressing brake pedal.
4. Refill until brake fluid comes out of each air bleeder valve.
   Use same procedure as in bleeding hydraulic system to refill brake fluid.
   Refer to “Bleeding Brake System”, BR-8.

Brake Burnishing Procedure

=NGBR0120

Burnish the brake contact surfaces according to the following procedure after refinishing or replacing drums or rotors, after replacing pads or linings, or if a soft pedal occurs at very low mileage.

CAUTION:

Only perform this procedure under safe road and traffic conditions. Use extreme caution.

1. Drive the vehicle on a straight smooth road at 50 km/h (31 MPH).
2. Use medium brake pedal/foot effort to bring the vehicle to a complete stop from 50 km/h (31 MPH). Adjust brake pedal/foot pressure such that vehicle stopping time equals to 3 to 5 seconds.
3. To cool the brake system, drive the vehicle at 50 km/h (31 MPH) for 1 minute without stopping.
4. Repeat steps 1 to 3, 10 times or more to complete the burnishing procedure.

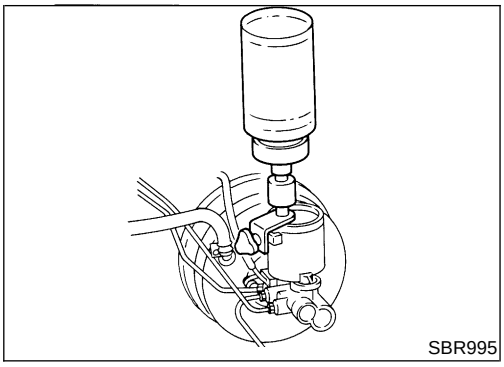
SBR995

Bleeding Brake System

=NGBR0009

CAUTION:

- **Carefully monitor brake fluid level at master cylinder during bleeding operation.**
- **If master cylinder is suspected to have air inside, bleed air from master cylinder first. Refer to “Installation”, BR-15.**
- **Fill reservoir with new brake fluid “DOT 3”. Make sure it is full at all times while bleeding air out of system.**
- **Place a container under master cylinder to avoid spillage of brake fluid.**
- **Turn ignition switch OFF and disconnect ABS actuator connectors or battery ground cable.**
- **Bleed air in the following order.**

1. Left rear brake
2. Right rear brake
3. Left front brake
4. Right front brake

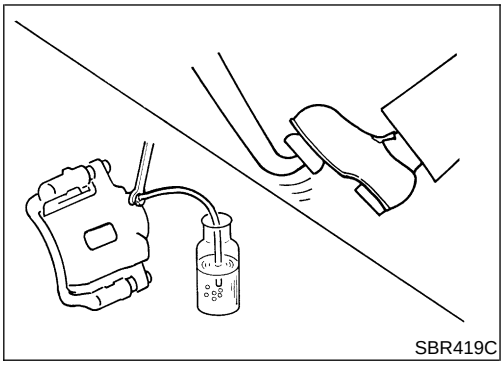
SBR419C

1. Connect a transparent vinyl tube to air bleeder valve.
2. Fully depress brake pedal several times.
3. With brake pedal depressed, open air bleeder valve to release air.
4. Close air bleeder valve.
5. Release brake pedal slowly.
6. Repeat steps 2. through 5. until clear brake fluid comes out of air bleeder valve.
7. Tighten air bleeder valve to specified torque.

   : 7 - 9 N·m (0.7 - 0.9 kg-m, 61 - 78 in-lb)

Hydraulic Circuit

NGBR0010

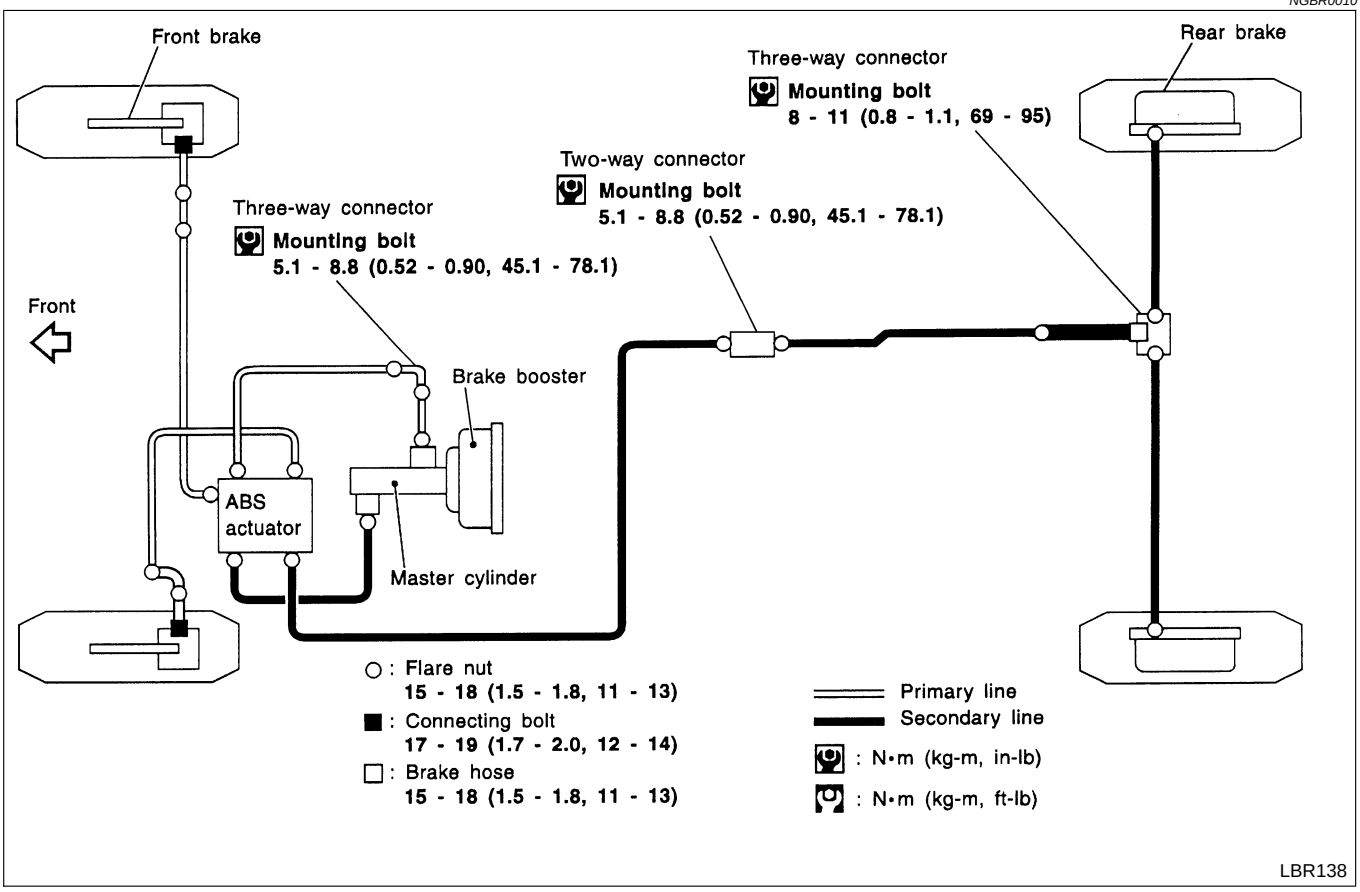

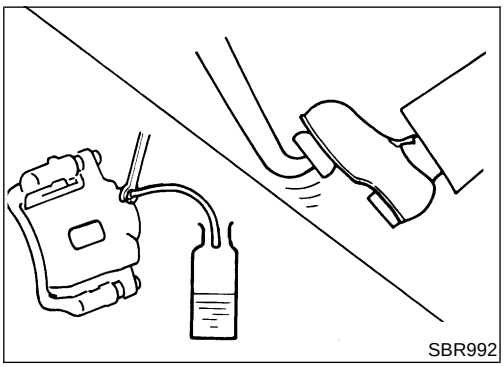

Removal

NGBR0011

CAUTION:

- **Be careful not to splash brake fluid on painted areas; it may cause paint damage. If brake fluid is splashed on painted areas, wash it away with water immediately.**
- **All hoses must be free from excessive bending, twisting and pulling.**

1. Connect vinyl tube to air bleeder valve.
2. Drain brake fluid from each air bleeder valve by depressing brake pedal.
3. Remove flare nut connecting brake tube and hose, then withdraw lock spring.
4. Cover openings to prevent entrance of dirt whenever disconnecting brake line.

Inspection

NGBR0012

Check brake lines (tubes and hoses) for cracks, deterioration and other damage. Replace any damaged parts.

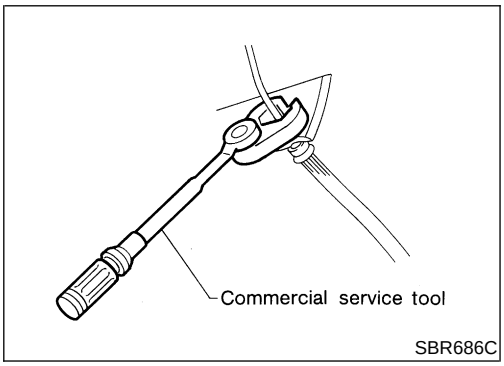

Installation

NGBR0013

CAUTION:

- **Refill with new brake fluid “DOT 3”.**
- **Never reuse drained brake fluid.**

1. Tighten all flare nuts and connecting bolts.

   Flare nut:

   : 15 - 17 N·m (1.5 - 1.8 kg-m, 11 - 13 ft-lb)

   Connecting bolt:

   : 17 - 19 N·m (1.7 - 2.0 kg-m, 12 - 14 ft-lb)
2. Refill until new brake fluid comes out of each air bleeder valve.
3. Bleed air. Refer to “Bleeding Brake System”, BR-8.

Removal and Installation

NGBR0016

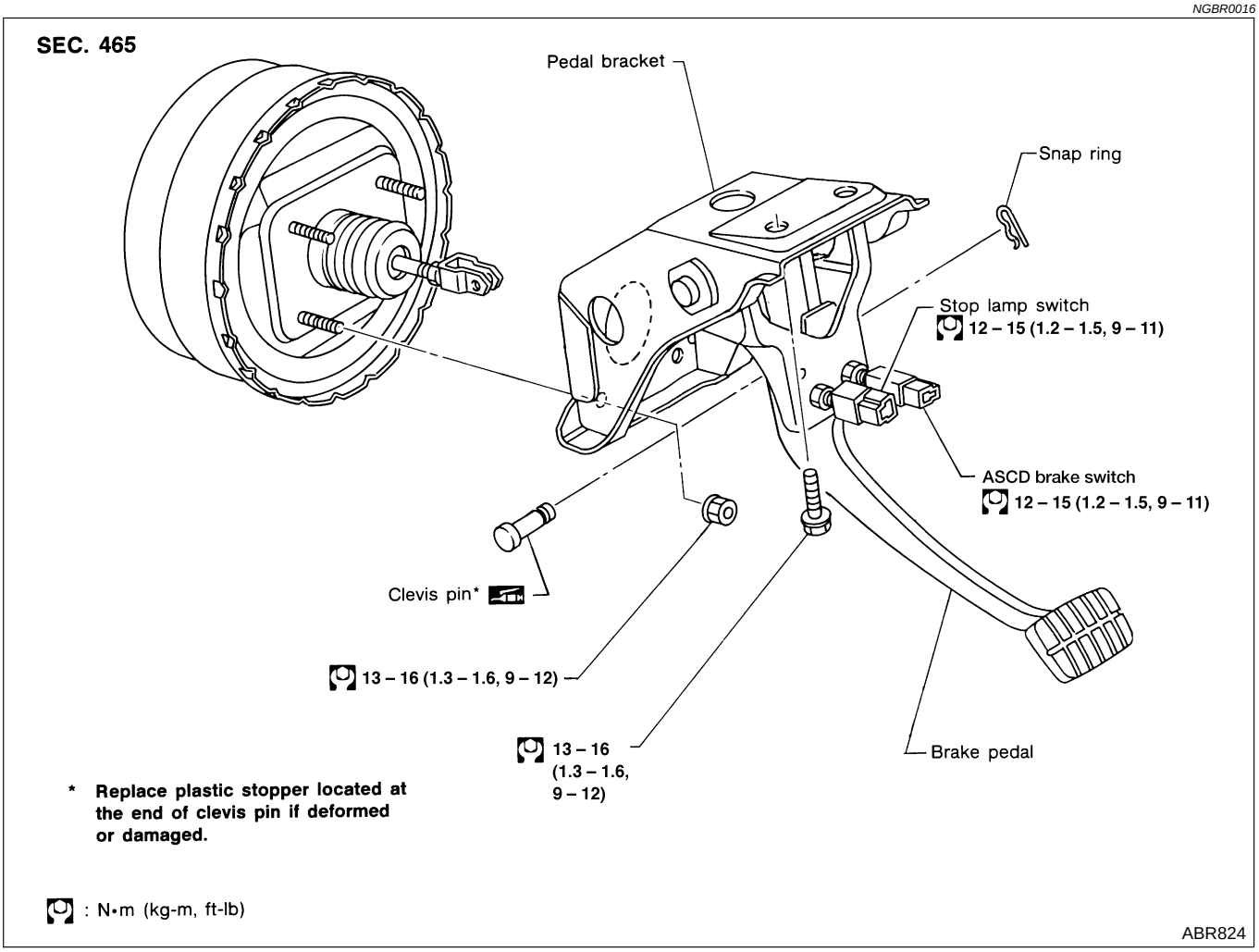

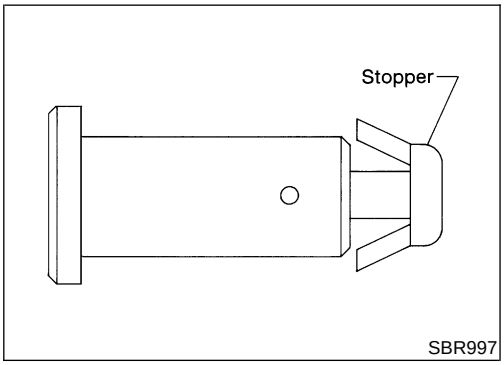

Inspection

NGBR0017

Check brake pedal for following items.

- Brake pedal bend
- Clevis pin deformation
- Crack of any welded portion
- Crack or deformation of clevis pin stopper

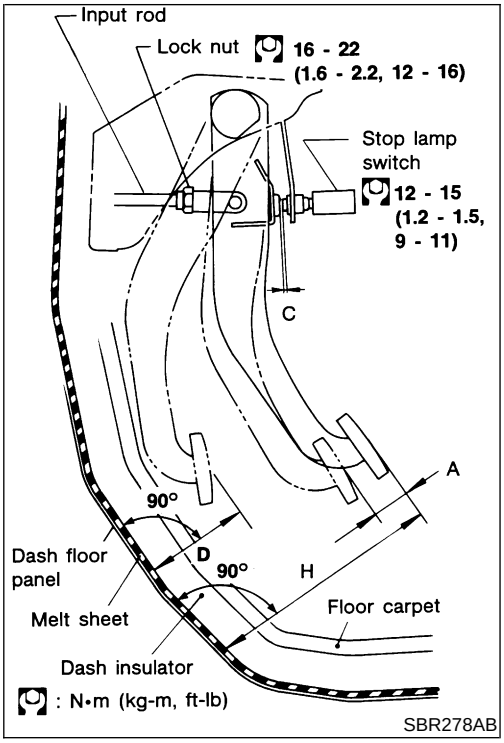

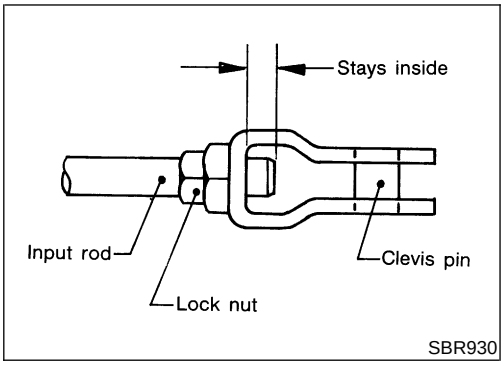

Adjustment

NGBR0018

Check brake pedal free height from metal floor.

H: Free height

Refer to “Brake Pedal”, BR-79.

D: Depressed height

Refer to “Brake Pedal” BR-79.

Under force of 490 N (50 kg, 110 lb) with engine running

C_1, C_2: Clearance between pedal stopper and threaded end of stop lamp switch and ASCD switch

0.3 - 1.0 mm (0.012 - 0.039 in)

A: Pedal free play

1 - 3 mm (0.04 - 0.12 in)

If necessary, adjust brake pedal free height.

1. Loosen lock nut and adjust pedal free height by turning brake booster input rod. Then tighten lock nut.

Make sure that tip of input rod stays inside.

2. Adjust clearance “C_1” and “C_2” with stop lamp switch and ASCD switch respectively. Then tighten lock nuts.
3. Check pedal free play.

Make sure that stop lamp is off when pedal is released.

4. Check brake pedal’s depressed height while engine is running. If depressed height is below specified value, check brake system for leaks, accumulation of air or any damage to components (master cylinder, wheel cylinder, etc.). Then make necessary repairs.

Removal

NGBR0019

CAUTION:

- **Be careful not to splash brake fluid on painted areas; it may cause paint damage. If brake fluid is splashed on painted areas, wash it away with water immediately.**
- **In the case of brake fluid leakage from the master cylinder, disassemble the cylinder. Then check piston cups for deformation and scratches and replace necessary parts.**

1. Connect a vinyl tube to air bleeder valve.
2. Drain brake fluid from each air bleeder valve, depressing brake pedal to empty fluid from master cylinder.
3. Remove brake pipe flare nuts.
4. Remove master cylinder mounting nuts.

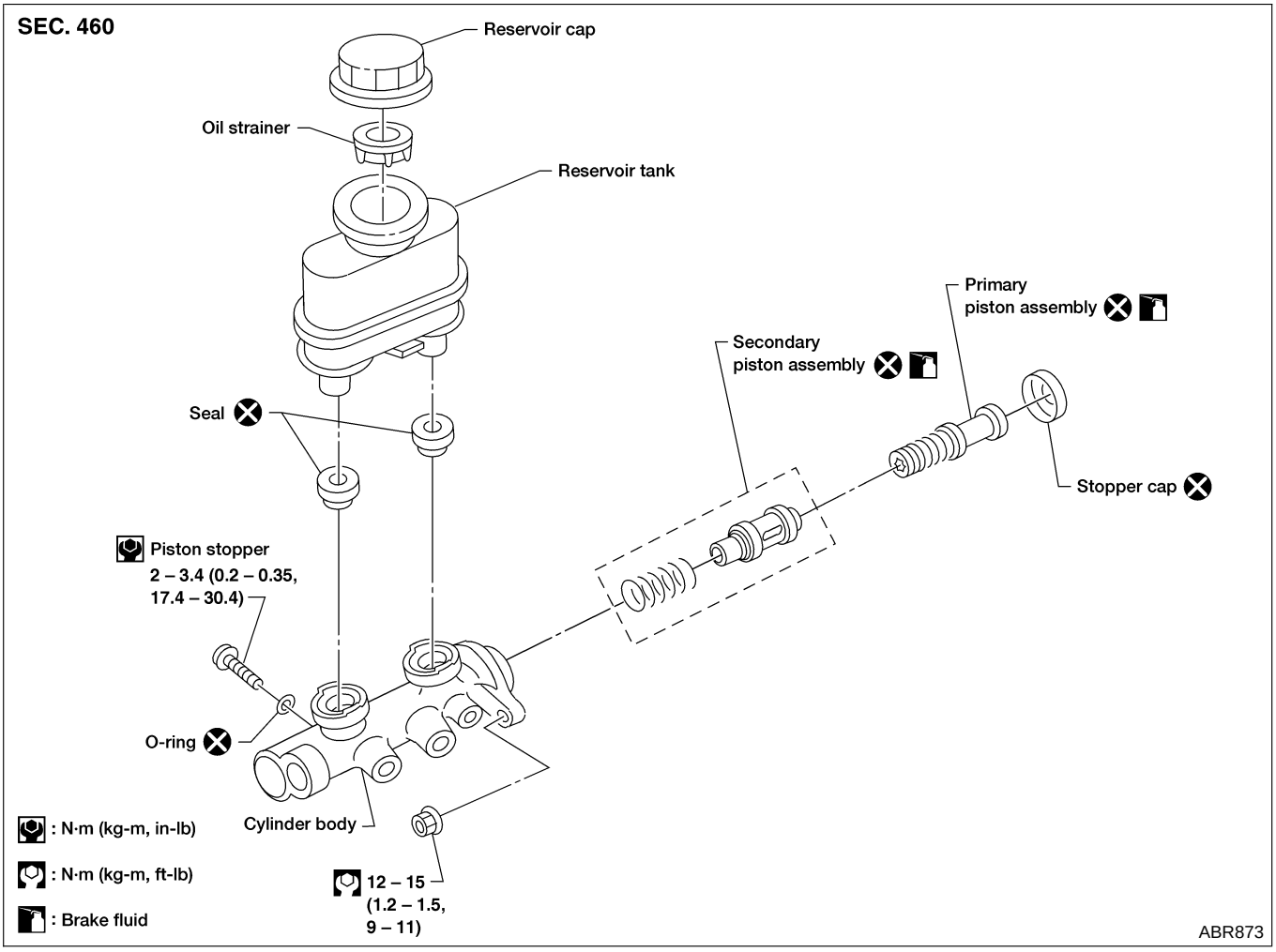

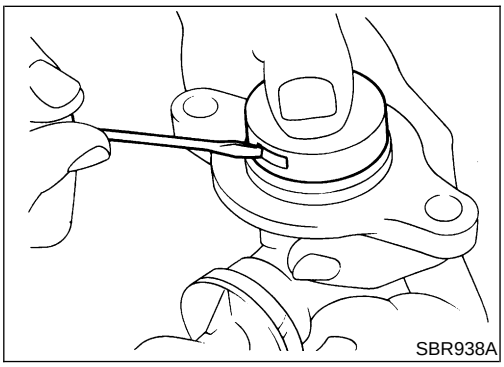

Disassembly

NGBR0020

1. Bend claws of stopper cap outward.

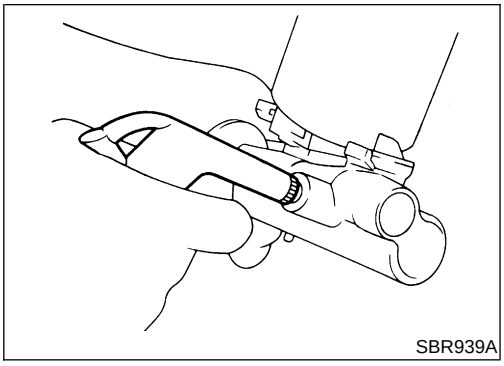
SBR939A

2. Remove piston stopper while piston is pushed into cylinder.
3. Remove piston assemblies.

If it is difficult to remove secondary piston assembly, gradually apply compressed air through fluid outlet.

4. Draw out reservoir tank.

Inspection

NGBR0021

Check master cylinder inner wall for pin holes and scratches. Replace if damaged.

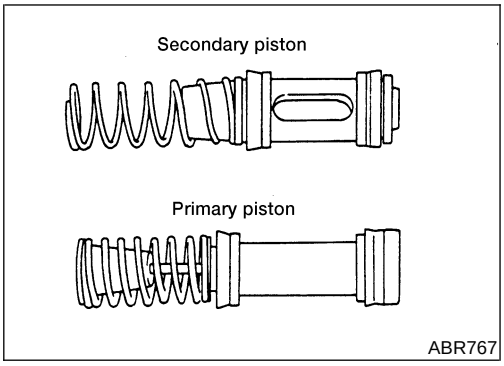

ABR767

Assembly

NGBR0022

1. Insert secondary piston assembly. Then insert primary piston assembly.

- **Pay attention to direction of piston cups in figure at left. Also, insert pistons squarely to avoid scratches on cylinder bore.**

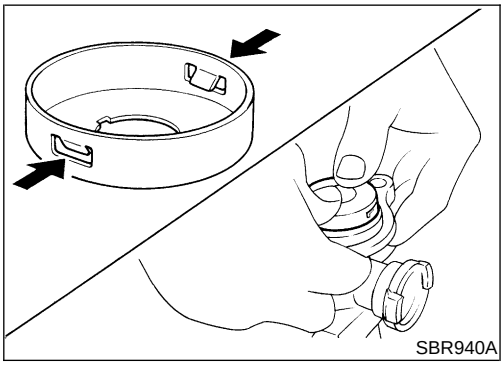
SBR940A

2. Install stopper cap.

Before installing stopper cap, ensure that claws are bent inward.

3. Push reservoir tank seals into cylinder body.
4. Push reservoir tank into cylinder body.

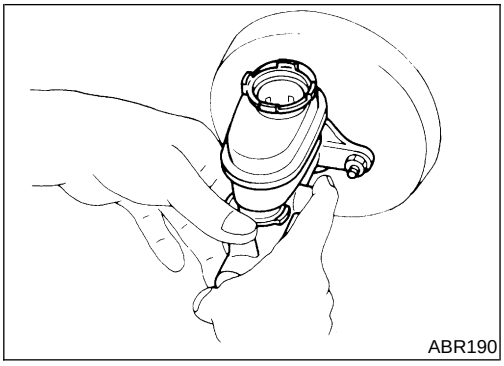

Installation

=NGBR0023

CAUTION:

- **Refill with new brake fluid "DOT 3".**
- **Never reuse drained brake fluid.**

1. Place master cylinder onto brake booster and secure mounting nuts lightly.
2. Torque mounting nuts.
   : 12 - 15 N·m (1.2 - 1.5 kg-m, 9 - 11 ft-lb)
3. Fill up reservoir tank with new brake fluid.
4. Plug all ports on master cylinder with fingers to prevent air suction while releasing brake pedal.
5. Have driver depress brake pedal slowly several times until no air comes out of master cylinder.
6. Fit brake lines to master cylinder.
7. Tighten flare nuts.
   : 15 - 17 N·m (1.5 - 1.8 kg-m, 11 - 13 ft-lb)
8. Bleed air. Refer to "Bleeding Brake System", BR-8.

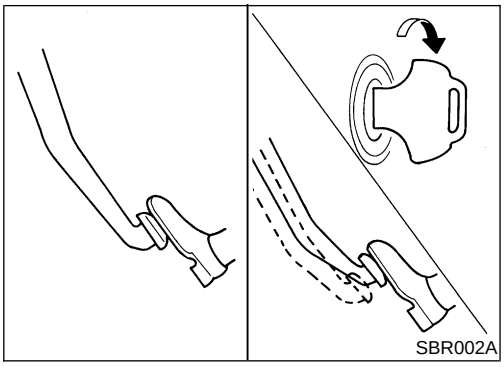
SBR002A

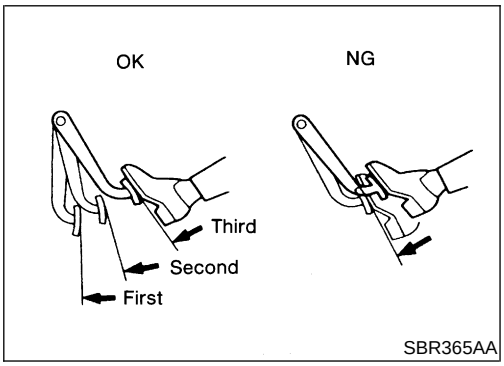

SBR365AA

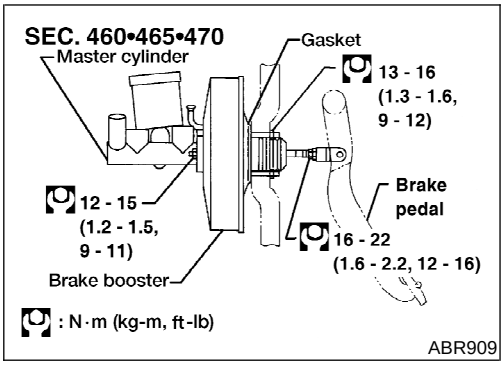

ABR909

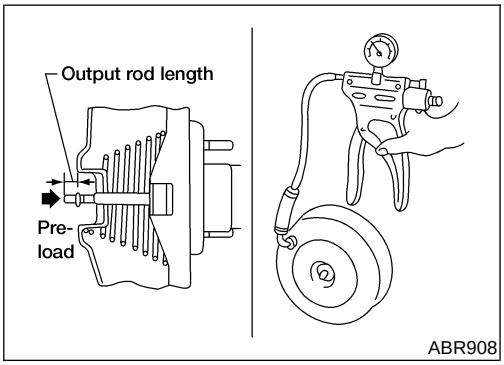

ABR908

On-vehicle Service

NGBR0024

OPERATING CHECK

NGBR0024S01

1. Depress brake pedal several times with engine off. After exhausting vacuum, make sure there is no change in pedal stroke.
2. Depress brake pedal, then start engine. If pedal goes down slightly, operation is normal.

AIRTIGHT CHECK

NGBR0024S02

1. Start engine, and stop it after one or two minutes. Depress brake pedal several times slowly. Booster is airtight if pedal stroke is less each time.
2. Depress brake pedal while engine is running, and stop engine with pedal depressed. The pedal stroke should not change after holding pedal down for **30 seconds**.

Removal

NGBR0025

CAUTION:

- **Be careful not to splash brake fluid on painted areas; it may cause paint damage. If brake fluid is splashed on painted areas, wash it away with water immediately.**
- **Be careful not to deform or bend brake pipes, during removal of booster.**

Inspection

NGBR0026

OUTPUT ROD LENGTH CHECK

NGBR0026S01

1. Apply vacuum of −66.7 kPa (−500 mmHg, −19.69 inHg) to brake booster with a hand vacuum pump.
2. Add preload of 19.6 N (2.0 kg, 4.4 lb) to output rod length.
3. Check output rod length.

   Specified length:

   10.275 - 10.525 mm (0.4045 - 0.4144 in)

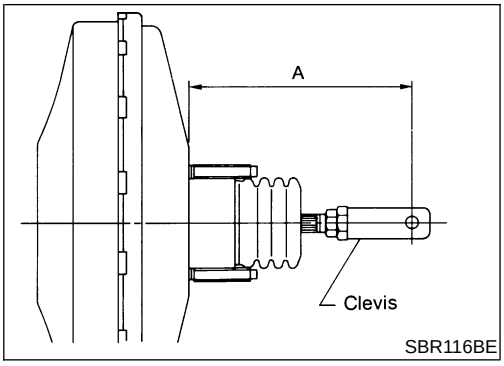

Installation

=NGBR0027

CAUTION:

- **Be careful not to deform or bend brake pipes during installation of booster.**
- **Replace clevis pin if damaged.**
- **Refill with new brake fluid “DOT 3”.**
- **Never reuse drained brake fluid.**
- **Take care not to damage brake booster mounting bolt thread when installing. Due to the narrow angle of installation, the threads can be damaged by the dash panel.**

A: 138.5 mm (5.45 in)

1. Before fitting booster, temporarily adjust clevis to dimension shown.
2. Fit booster, then secure mounting nuts (brake pedal bracket to brake booster) lightly.
3. Connect brake pedal and booster input rod with clevis pin.
4. Secure mounting nuts.

   Specification: 13 - 16 N·m (1.3 - 1.6 kg-m, 9 - 12 ft-lb)
5. Install master cylinder. Refer to “Installation”, BR-15.
6. Adjust brake pedal height and free play. Refer to “Adjustment”, BR-12.
7. Secure lock nut for clevis.

   : 16 - 22 N·m (1.6 - 2.2 kg-m, 12 - 16 ft-lb)
8. Bleed air. Refer to “Bleeding Brake System”, BR-8.

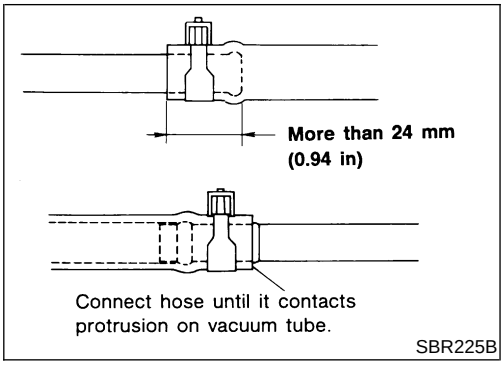

Removal and Installation

NGBR0029

CAUTION:

When installing vacuum hoses, pay attention to the following points.

- **Do not apply any oil or lubricants to vacuum hose and check valve.**
- **Insert vacuum tube into vacuum hose as shown.**
- **Install check valve, paying attention to its direction.**

Inspection

NGBR0030

HOSES AND CONNECTORS

NGBR0030S01

Check vacuum lines, connections and check valve for airtightness, improper attachment chafing and deterioration.

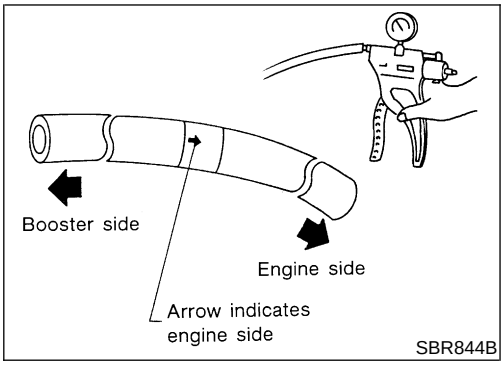

CHECK VALVE

NGBR0030S02

Check vacuum with a vacuum pump.

Connect to booster side	Vacuum should exist.
Connect to engine side	Vacuum should not exist.

Pad Replacement

NGBR0032

WARNING:

Clean brakes with a vacuum dust collector to minimize the hazard of airborne particles or other materials.

CAUTION:

- **When cylinder body is open, do not depress brake pedal, or piston will pop out.**
- **Be careful not to damage piston boot or get oil on rotor. Always replace shims when replacing pads.**
- **If shims are rusted or show peeling of the rubber coat, replace them with new shims.**
- **It is not necessary to remove connecting bolt except for disassembly or replacement of caliper assembly. In this case, suspend cylinder body with wire so as not to stretch brake hose.**
- **Carefully monitor brake fluid level because brake fluid will return to reservoir when pushing back piston.**

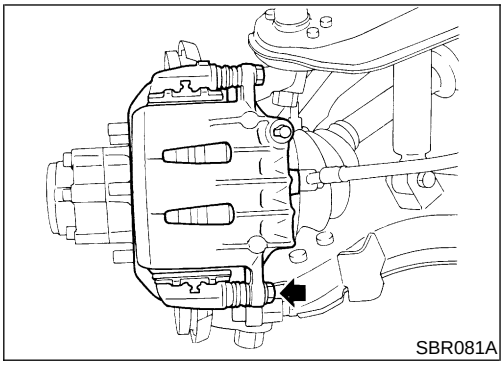

SBR081A

1. Remove master cylinder reservoir cap.
2. Remove lower pin bolt.

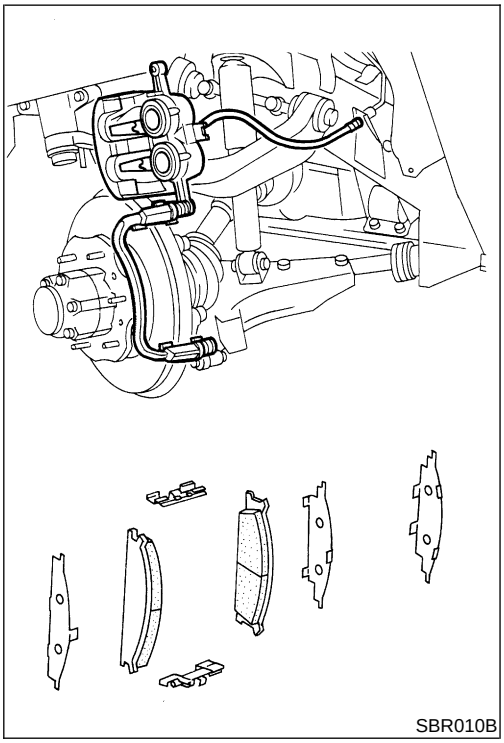

SBR010B

3. Open cylinder body upward. Then remove pad retainers, inner and outer shims, and shim cover (if equipped).

   Standard pad thickness:
   11 mm (0.43 in)
   Pad wear limit:
   2.0 mm (0.079 in)

Carefully monitor brake fluid level because brake fluid will return to reservoir when pushing back piston.

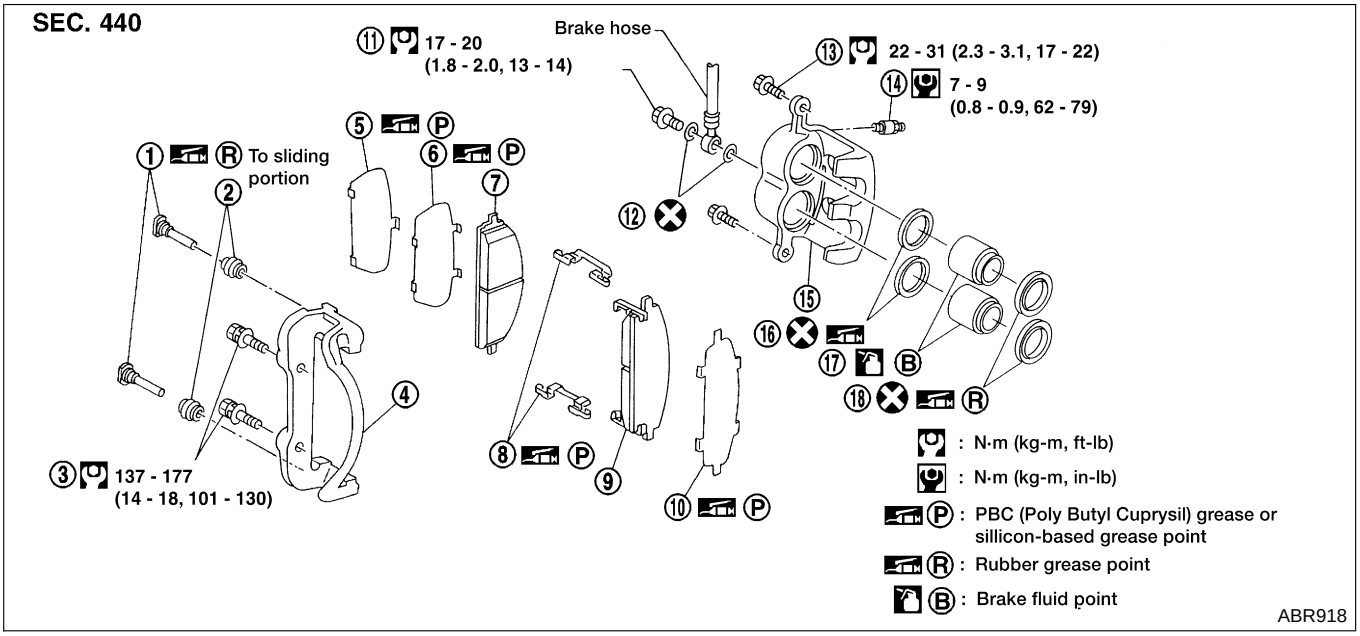

1. Main pin
2. Pin boot
3. Torque member fixing bolt
4. Torque member
5. Shim cover (if equipped)
6. Inner shim
7. Inner pad
8. Pad retainer
9. Outer pad
10. Outer shim
11. Connecting bolt
12. Copper washer
13. Main pin bolt
14. Bleed valve
15. Cylinder body
16. Piston seal
17. Piston
18. Piston boot

Removal

NGBR0033

WARNING:

Clean brake pads with a vacuum dust collector to minimize the hazard of airborne particles or other materials.

CAUTION:

Suspend caliper assembly with wire so as not to stretch brake hose.

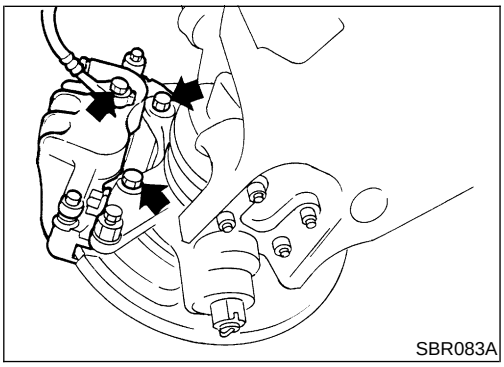

Remove torque member fixing bolts and connecting bolt.

It is not necessary to remove connecting bolt except for disassembly or replacement of caliper assembly. In this case, suspend caliper assembly with wire so as not to stretch brake hose.

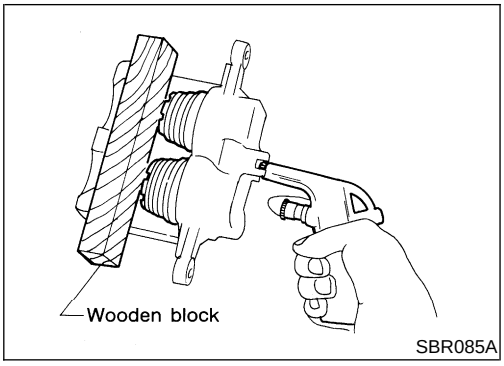

SBR085A

Disassembly

NGBR0034

WARNING:

Do not place your fingers in front of piston.

CAUTION:

Do not scratch or score cylinder wall.

1. Push out piston with dust seal with compressed air.
2. Remove piston seal with a suitable tool.

Inspection

NGBR0035

CALIPER

NGBR0035S01

Cylinder Body

NGBR0035S0101

- Check inside surface of cylinder for score, rust, wear, damage and presence of foreign objects. If any of the above conditions are observed, replace cylinder body.
- Minor damage from rust or foreign objects may be eliminated by polishing surface with a fine emery paper. Replace cylinder body if necessary.

CAUTION:

Use brake fluid to clean. Never use mineral oil.

Piston

NGBR0035S0102

CAUTION:

Piston sliding surface is plated. Do not polish with emery paper even if rust or foreign objects are stuck to sliding surface.

Check pistons for uneven surface, chips or cracks. Replace if any of these conditions are observed.

Slide Pin, Pin Bolt and Pin Boot

NGBR0035S0103

Check for wear, cracks, rust and other damage. Replace if any of the above conditions are observed.

ROTOR

NGBR0035S02

Runout

NGBR0035S0201

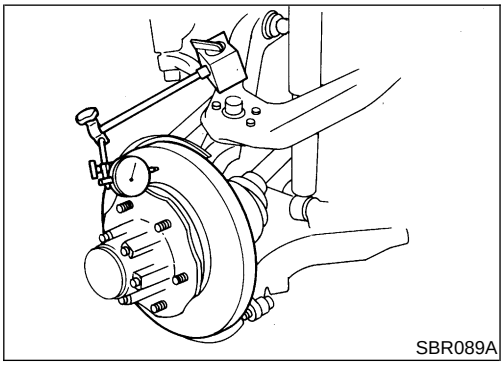
SBR089A

1. Check runout using a dial indicator.

Make sure that wheel bearing axial end play is within the specifications before measuring. Refer to *AX-5*, "Front Wheel Bearing".

Maximum runout:
0.07 mm (0.0028 in)

2. If the runout is out of specification, machine rotor with on-car brake lathe ("MAD, DL-8700", "AMMCO 700 and 705" or equivalent).

Thickness

NGBR0035S0202

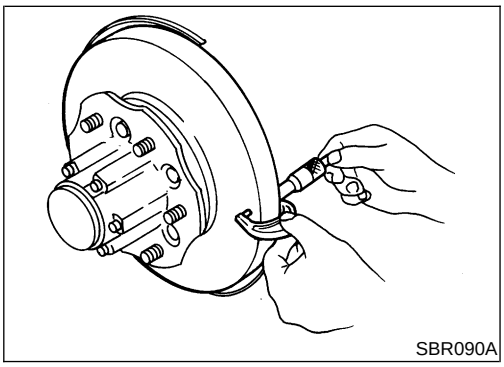
SBR090A

Thickness variation (At least 8 positions):
Maximum 0.02 mm (0.0008 in)

If thickness variation exceeds the specification, turn rotor with on-car brake lathe.

Rotor repair limit:
26.0 mm (1.024 in)

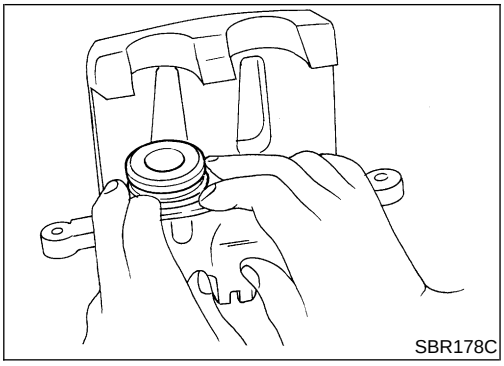
SBR178C

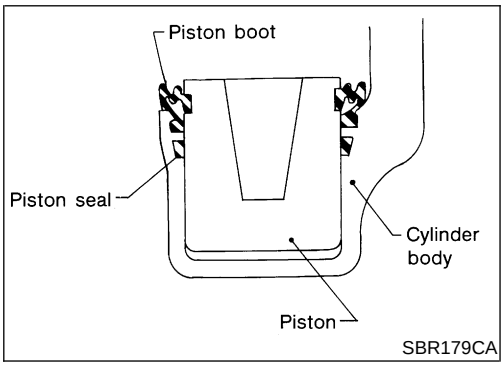

SBR179CA

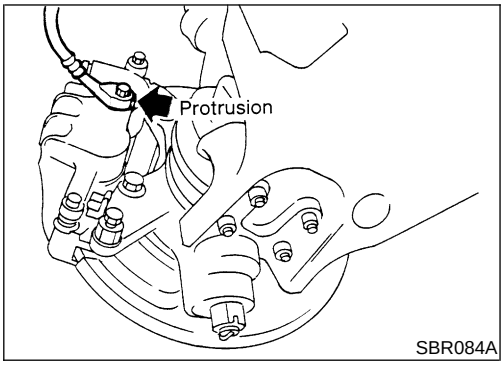

SBR084A

Assembly

NGBR0036

1. Insert piston seal into groove on cylinder body.
2. With piston boot fitted to piston, insert piston boot into groove on cylinder body and install piston.
3. Properly secure piston boot

CAUTION:

- **Secure dust seal property.**
- **Lubricate with new brake fluid before installing plastic pistons into cylinder body.**

Installation

NGBR0037

CAUTION:

- **Refill with new brake fluid “DOT 3”.**
- **Never reuse drained brake fluid.**

1. Install caliper assembly.
2. Install brake hose to caliper securely.
3. Install all parts and secure all bolts.
4. Bleed air. Refer to “Bleeding Brake System”, BR-8.

Brake Burnishing Procedure

NGBR0088

When experiencing soft brake pedal feel at very low mileage, or after replacing the rotor, burnish the brake pad contact surfaces according to the following procedures.

CAUTION:

Only perform this procedure under safe road and traffic conditions. Use extreme caution.

1. Drive the vehicle on a straight smooth road at 50 km/h (31 MPH).
2. Use medium brake pedal/foot effort to bring the vehicle to a complete stop from 50 km/h (31 MPH). Adjust brake pedal/foot pressure such that vehicle stopping time equals 3 to 5 seconds.
3. To cool the brake system, drive the vehicle at 50 km/h (31 MPH) for 1 minute without stopping.
4. Repeat steps 1 to 3 10 times or more to complete the burnishing procedure.

Components

NGBR0038

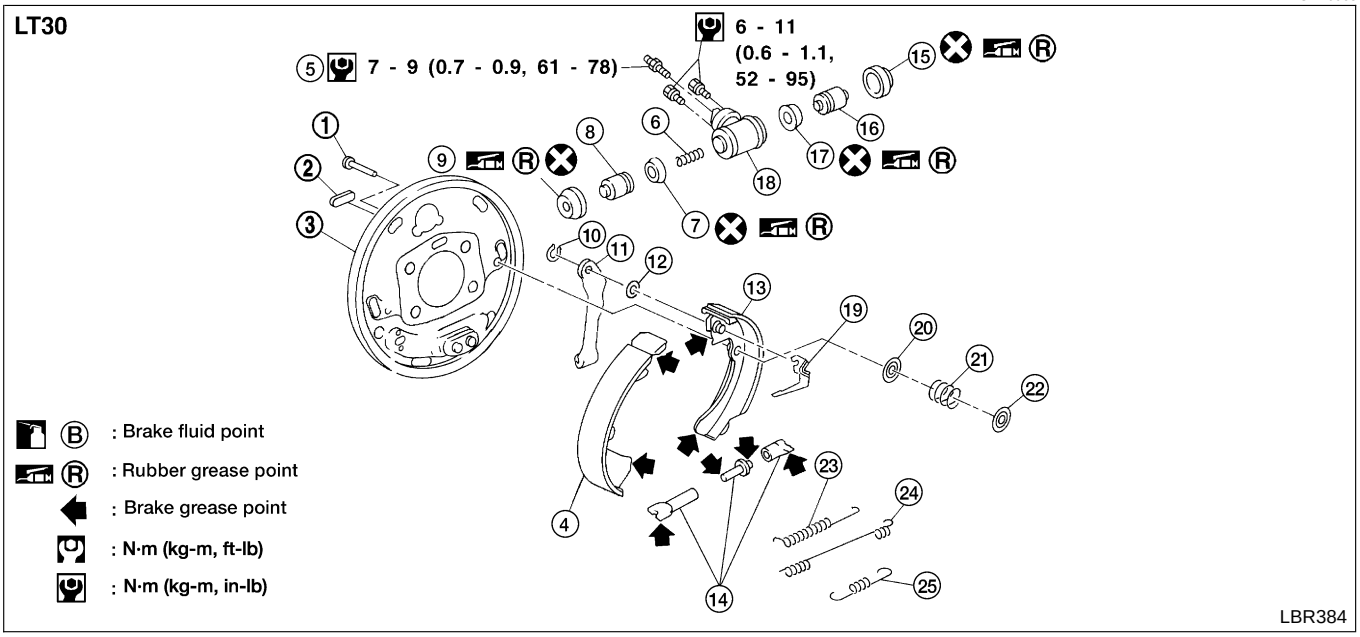

1. Shoe hold pin
2. Plug
3. Back plate
4. Shoe (leading side)
5. Air bleeder
6. Spring
7. Piston cup
8. Piston
9. Boot
10. Retainer ring
11. Toggle lever
12. Wave washer
13. Shoe (trailing side)
14. Adjuster
15. Boot
16. Piston
17. Piston cup
18. Wheel cylinder
19. Adjuster lever
20. Spring seat
21. Shoe hold spring
22. Retainer
23. Adjuster spring
24. Return spring (upper)
25. Return spring (lower)

Removal

NGBR0039

WARNING:

Clean brake lining with a vacuum dust collector to minimize the hazard of airborne asbestos or other materials.

CAUTION:

Make sure parking brake lever is released completely.

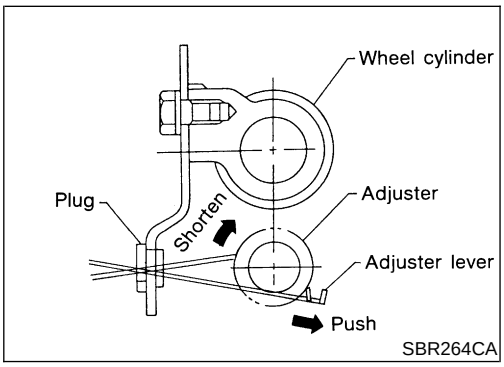

1. Release parking brake pedal fully, then remove drum.

- **If drum is hard to remove, the following procedures should be carried out.**

a. **Remove plug. Shorten adjuster to make clearance between brake shoe and drum as shown**

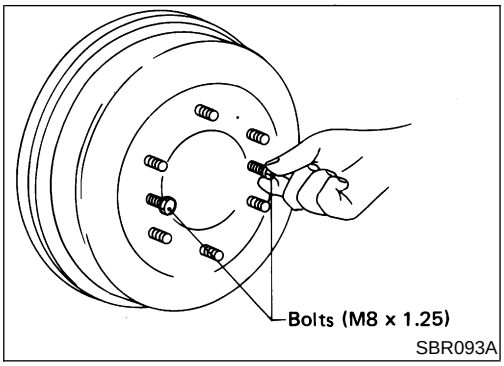

b. **Install two bolts as shown. Tighten the two bolts gradually.**

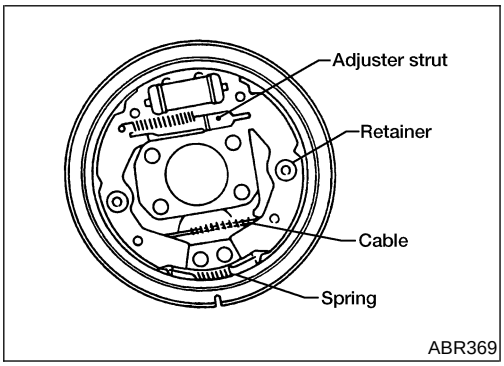

2. After removing retainer, remove spring by rotating shoes.

Be careful not to damage wheel cylinder piston boots. Be careful not to damage parking brake cable when separating it.

3. Remove adjuster.
4. Disconnect parking brake cable from toggle lever.

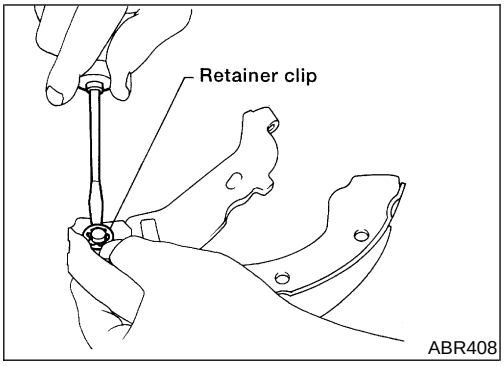

5. Remove retainer ring with a suitable tool. Then separate toggle lever and brake shoe.

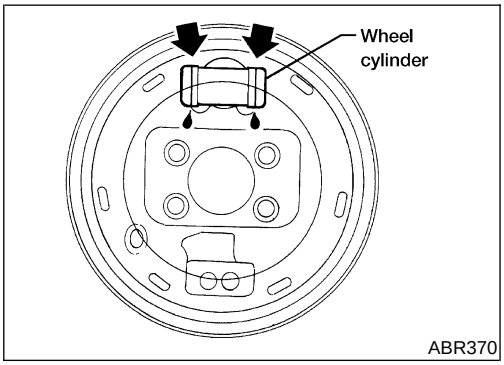

Inspection

NGBR0040

WHEEL CYLINDER

NGBR0040S01

- Check wheel cylinder for leakage.
- Check for wear, damage and loose conditions. Replace if any such condition exists.

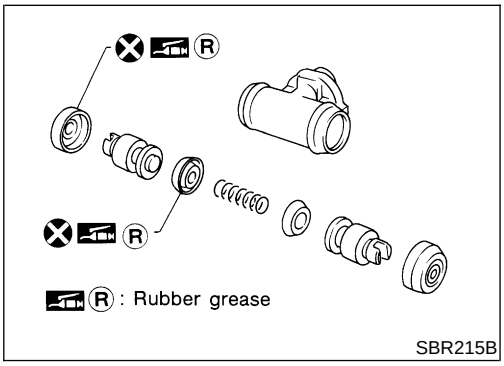

Wheel Cylinder Overhaul

NGBR0041

- Check all internal parts for wear, rust and damage. Replace if necessary.
- Pay attention so as not to scratch cylinder when installing pistons.

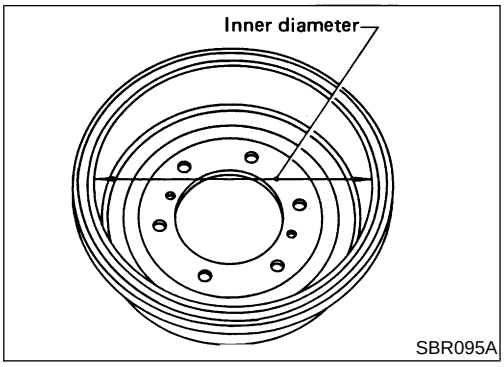

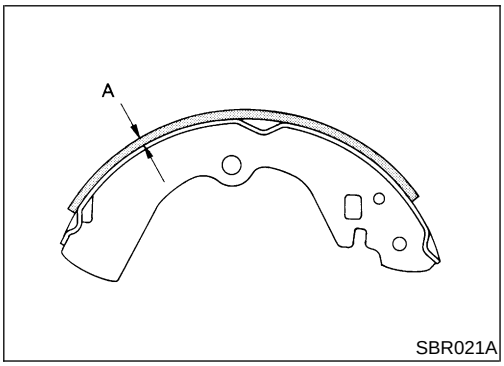

Inspection

NGBR0042

DRUM

NGBR0042S01

Maximum inner diameter (Repair limit):
296.5 mm (11.67 in)

- Contact surface should be fine finished with No. 120 to 150 emery paper.
- Using a drum lathe, lathe brake drum if it shows scoring, partial wear or stepped wear.
- After brake drum has been completely reconditioned or replaced, check drum and shoes for proper contact pattern.

LINING

NGBR0042S02

Check lining thickness.

Standard lining thickness:
5.8 mm (0.228 in)
Lining wear limit (A):
1.5 mm (0.059 in)

Installation

NGBR0043

Always perform shoe clearance adjustment. Refer to BR-28.

- **Burnish the brake contact surfaces after refinishing or replacing drums or rotors, after replacing pads or linings, or if a soft pedal occurs at very low mileage. Refer to "Brake Burnishing Procedure", BR-22.**

1. Fit toggle lever to brake shoe with retainer clip.

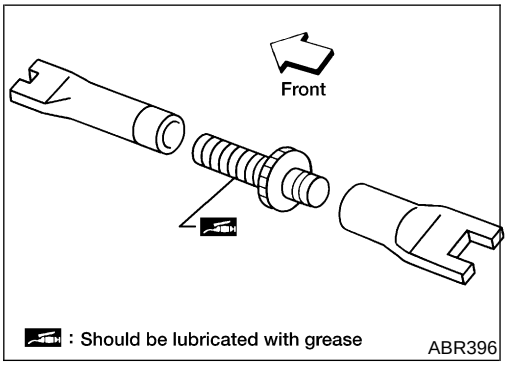

2. Shorten adjuster by rotating it.

- **Pay attention to direction of adjuster.**

Wheel	Screw	Depression
Left	Left-hand thread	Yes
Right	Right-hand thread	No

3. Connect parking brake cable to toggle lever.
4. Install all parts.

Be careful not to damage wheel cylinder piston boots.

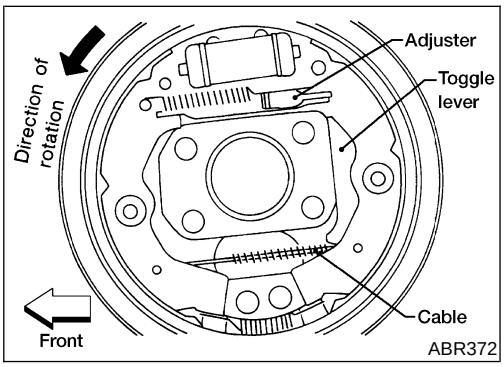

5. Check all parts are installed properly.

- **After installation is completed, adjust shoe-to-drum clearance.**

Pay attention to direction of adjuster assembly.

6. Install brake drum.
7. When installing new wheel cylinder or overhauling wheel cylinder, bleed air. Refer to "Bleeding Brake System", BR-8.
8. Adjust parking brake. Refer to "Adjustment", BR-28.

- Install all the parts by referring to the following figure.

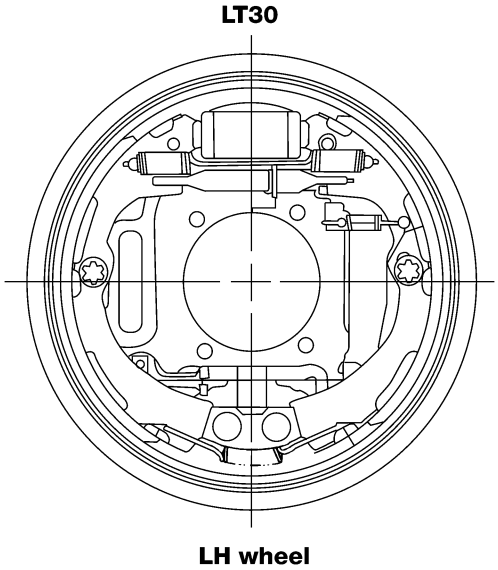

LBR395

Components

NGBR0044

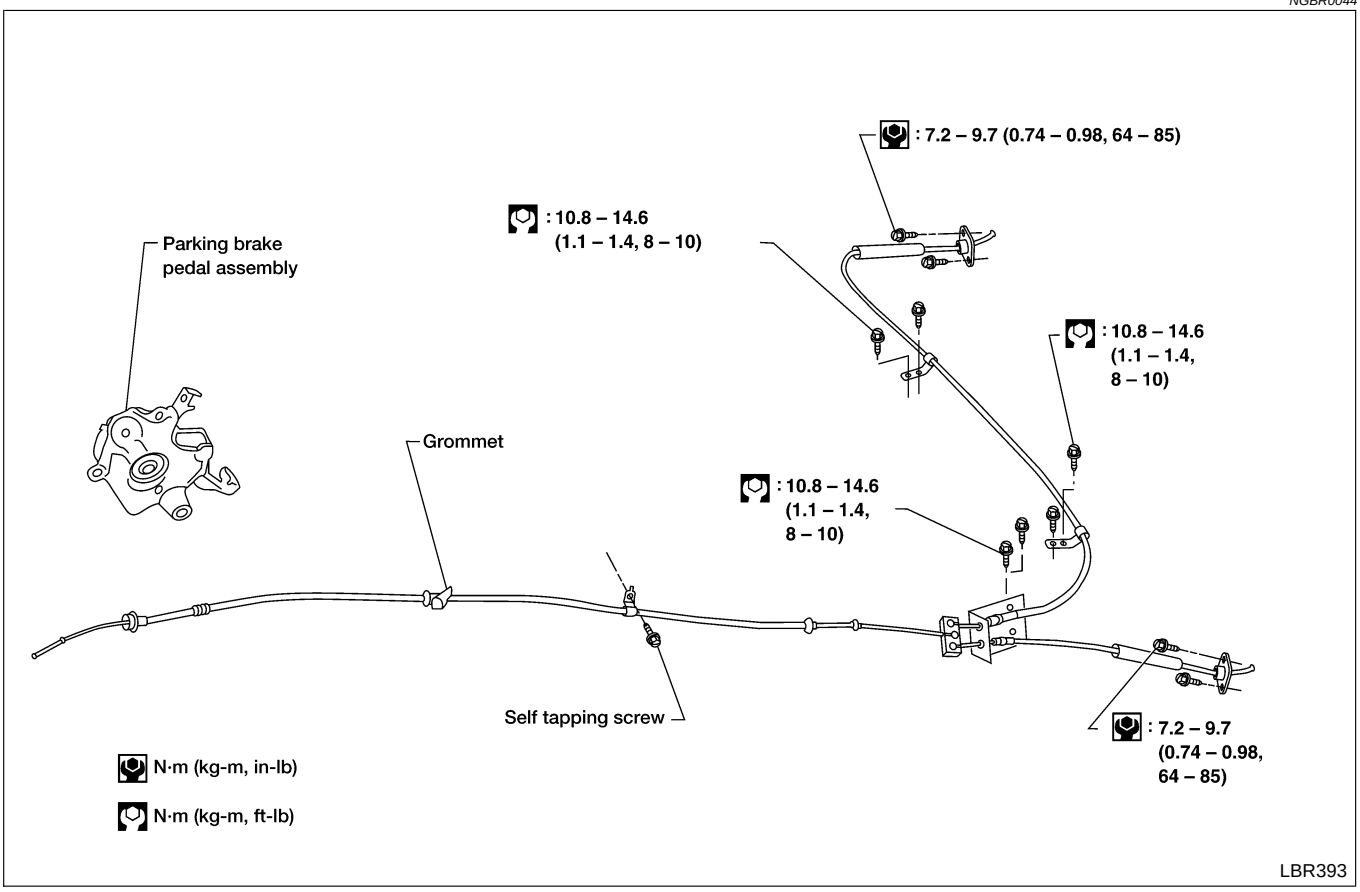

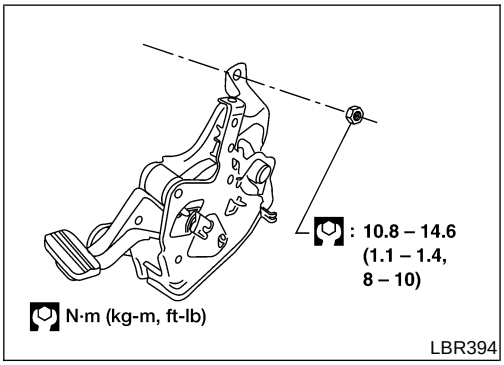

Removal and Installation

NGBR0045

1. To remove parking brake pedal, remove lower instrument panel on driver side.
2. Disconnect parking brake switch electrical connector.
3. Remove nuts, slacken off and remove adjusting nut.
4. Remove pedal assembly from vehicle and remove front cable from pedal assembly.

Inspection

NGBR0046

1. Check parking brake pedal assembly for wear or other damage. Replace if necessary.
2. Check cables for discontinuity or deterioration. Replace if necessary.
3. Check warning lamp and switch. Replace if necessary.
4. Check parts at each connection portion and, if found deformed or damaged, replace.

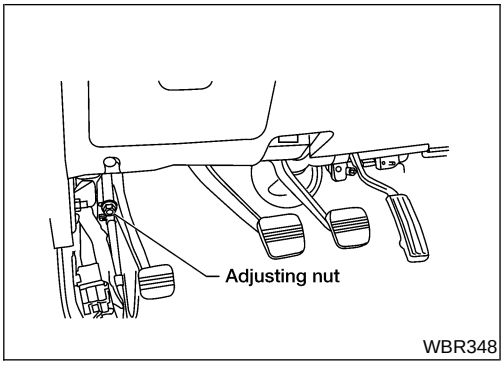

Adjustment

NGBR0047

Pay attention to the following point after adjustment.

1) Ensure there is no drag when pedal is released.

1. Loosen parking brake cable.
2. Depress parking brake pedal fully more than five times.
3. Operate parking brake pedal 10 times or more with a full stroke [169 mm (6.6 in)].
4. Adjust cable by turning adjusting nut.
5. Depress pedal with specified amount of force. Check pedal stroke and ensure smooth operation.

   Force: 196 N (20 kg, 44 lb)

   Number of notches:

   KA24DE models: 6–8

   VG33E and VG33ER models: 7–9

6. Bend warning lamp switch plate. Warning lamp should come on when pedal is depressed “A” notches. It should go off when the pedal is fully released.

   Number of “A” notches for warning lamp actuation: 1

Purpose

NGBR0089

The Anti-Lock Brake System (ABS) consists of electronic and hydraulic components. It allows for control of braking force so locking of the wheels can be avoided.

1) Improves proper tracking performance through steering wheel operation.
2) Eases obstacle avoidance through steering wheel operation.
3) Improves vehicle stability.

Operation

NGBR0090

- When the vehicle speed is less than 10 km/h (6 MPH) this system does not work.
- The Anti-Lock Brake System (ABS) has a self-test function. The system turns on the ABS warning lamp for 1 second each time the ignition switch is turned ON. After the engine is started, the ABS warning lamp turns off. The system performs a test the first time the vehicle reaches 6 km/h (4 MPH). A mechanical noise may be heard as the ABS performs this self-test. This is a normal part of the self-test feature. If a malfunction is found during this check, the ABS warning lamp will stay on.
- While driving, a mechanical noise may be heard during ABS operation. This is a normal condition.

ABS Hydraulic Circuit

NGBR0091

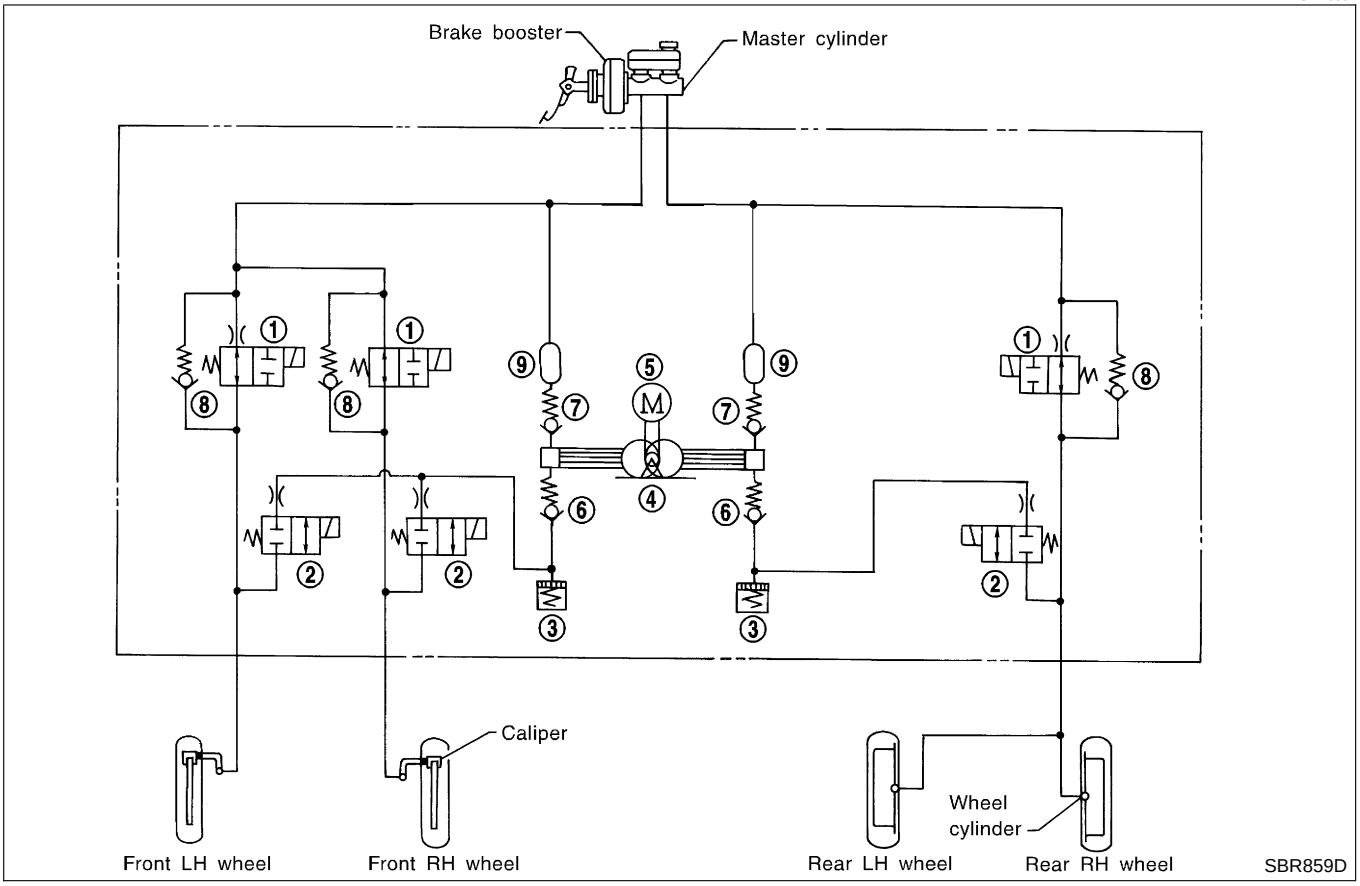

1. Inlet solenoid valve
2. Outlet solenoid valve
3. Reservoir
4. Pump
5. Motor
6. Inlet valve
7. Outlet valve
8. Bypass check valve
9. Damper

System Components

NGBR0092

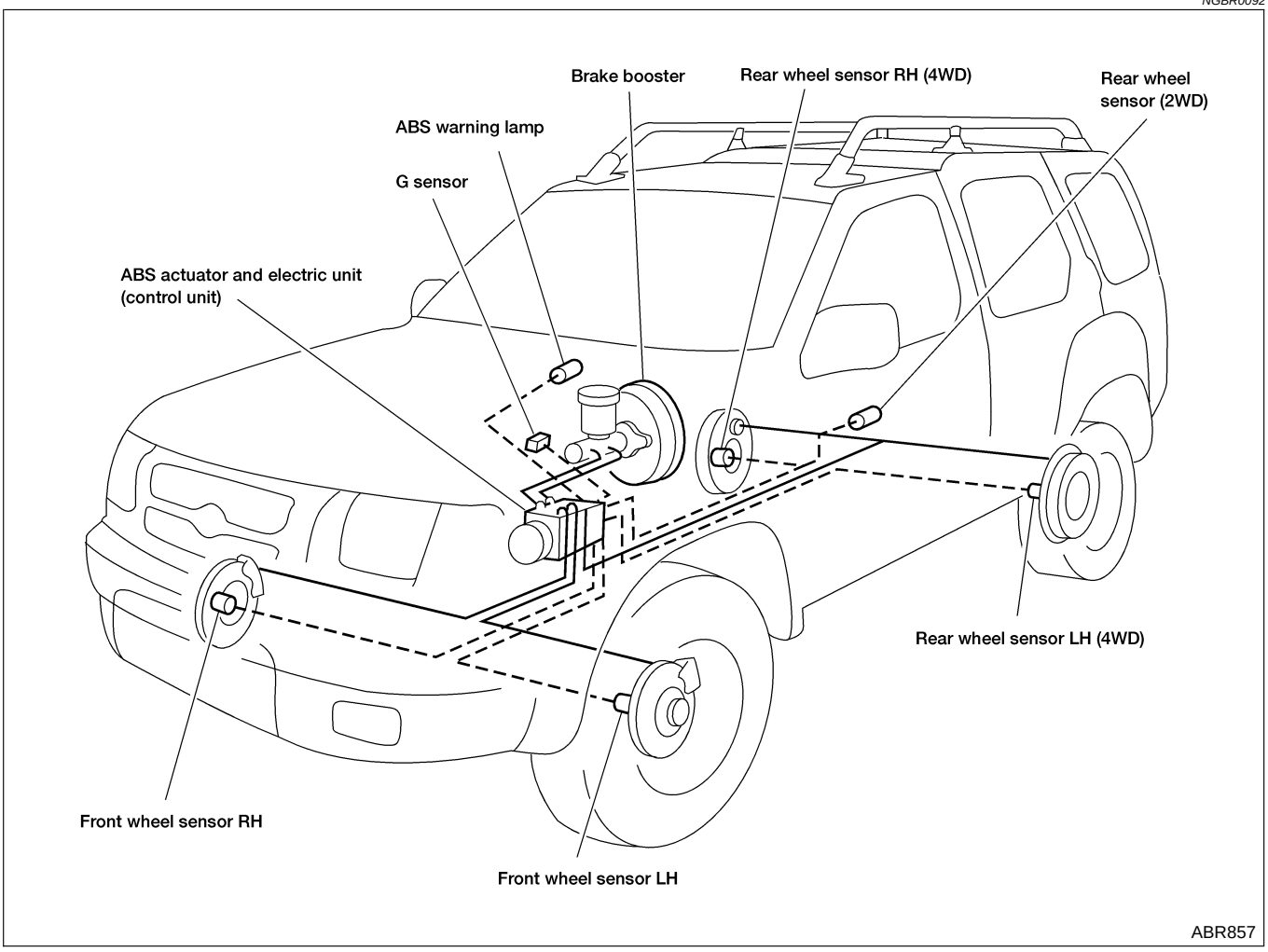

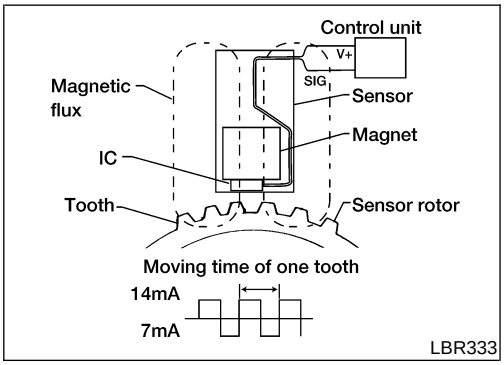

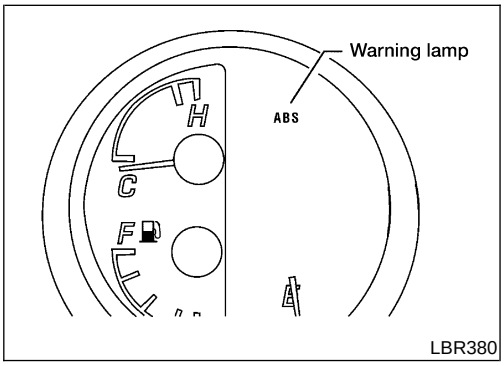

System Description

NGBR0093

WHEEL SENSOR

NGBR0093S01

The sensor units consist of a gear-shaped sensor rotor and a sensor element. The front sensors are installed on the back of the front brake rotors. For 2-wheel drive systems a single sensor is installed at the companion flange of the rear axle housing and for 4-wheel drive systems there is a sensor installed at each rear brake drum. As the wheel rotates, the sensor generates a square-wave pattern. The frequency increases as the rotating speed increases.

CONTROL UNIT (BUILT-IN ABS ACTUATOR AND ELECTRIC UNIT)

NGBR0093S02

The control unit computes the wheel rotating speed by the signal current sent from the sensor. Then it supplies a DC current to the actuator solenoid valve. It also controls ON-OFF operation of the valve relay and motor relay. If any electrical malfunction should be detected in the system, the control unit causes the warning lamp to light up. In this condition, the ABS will be deactivated by the control unit, and the vehicle's brake system reverts to normal operation. For control unit layout, refer to "ABS ACTUATOR AND ELECTRIC UNIT", BR-31.

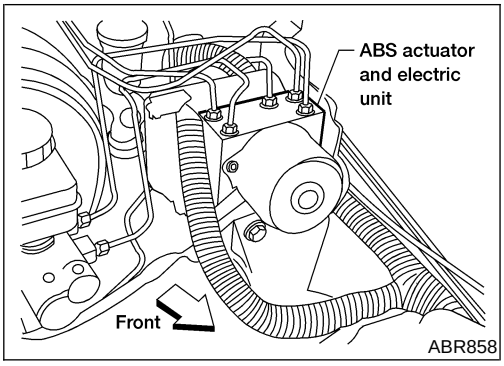

ABS ACTUATOR AND ELECTRIC UNIT

NGBR0093S03

The ABS actuator and electric unit contains:

- An electric motor and pump
- Two relays
- Six solenoid valves. An inlet and outlet each for
  — LH front
  — RH front
  — Rear
- ABS control unit

This component controls the hydraulic circuit and increases, holds or decreases hydraulic pressure to all or individual wheels. The ABS actuator and electric unit is serviced as an assembly.

ABS Actuator Operation

NGBR0093S0301

		Inlet solenoid valve	Outlet solenoid valve	
Normal brake operation		OFF (Open)	OFF (Closed)	Master cylinder brake fluid pressure is directly transmitted to caliper via the inlet solenoid valve.
ABS operation	Pressure hold	ON (Closed)	OFF (Closed)	Hydraulic circuit is shut off to hold the caliper brake fluid pressure.
	Pressure decrease	ON (Closed)	ON (Open)	Caliper brake fluid is sent to reservoir via the outlet solenoid valve. Then it is pushed up to the master cylinder by pump.
	Pressure increase	OFF (Open)	OFF (Closed)	Master cylinder brake fluid pressure is transmitted to caliper.

G SENSOR (4WD MODELS)

NGBR0093S05

The G sensor senses deceleration during braking to determine whether the vehicle is being driven on a high μ road (asphalt road, etc.) or a low μ road (snow-covered road, etc.). It then sends a signal to the ABS control unit.

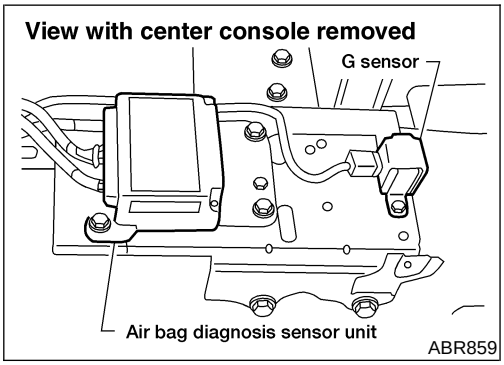

This signal is received by the ABS control unit as a variable voltage signal. The input voltage varies from 1.3V ±0.125V during a hard deceleration condition, to 2.5V ±0.125V with the vehicle stopped and to 3.7V ±0.125V during a hard deceleration in reverse.

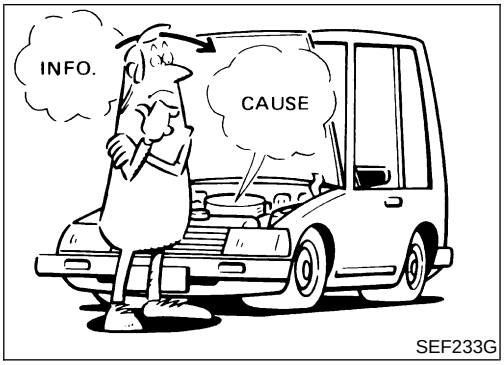

SEF233G

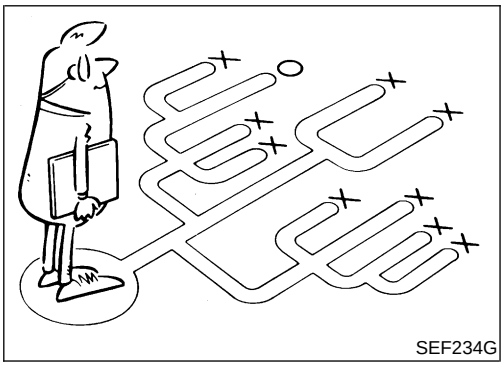
SEF234G

How to Perform Trouble Diagnoses for Quick and Accurate Repair

NGBR0100

INTRODUCTION

NGBR0100S01

The ABS system has an electronic control unit to control major functions. The control unit accepts input signals from sensors and instantly drives the actuators. It is essential that both kinds of signals are proper and stable. It is also important to check for conventional problems: such as air leaks in booster lines, lack of brake fluid, or other problems with the brake system.

It is much more difficult to diagnose a problem that occurs intermittently rather than continuously. Most intermittent problems are caused by poor electric connections or faulty wiring. In this case, careful checking of suspicious circuits may help prevent the replacement of good parts.

A visual check only may not find the cause of the problems, so a road test should be performed.

Before undertaking actual checks, take a few minutes to talk with a customer who approaches with an ABS complaint. The customer is a very good source of information on such problems; especially intermittent ones. By talking to the customer, find out what symptoms are present and under what conditions they occur. Start your diagnosis by looking for “conventional” problems first. This is one of the best ways to troubleshoot brake problems on an ABS controlled vehicle.

Also check related Service bulletins for information.

Preliminary Check

NGBR0101

1	CHECK BRAKE FLUID	
Check brake fluid for contamination.		
Has brake fluid been contaminated?		
Yes	▶	Replace. GO TO 2.
No	▶	GO TO 2.

2	CHECK BRAKE FLUID LEVEL	
Check brake fluid level in reservoir tank. Low fluid level may indicate brake pad wear or leakage from brake line.		
Is brake fluid filled between MAX and MIN lines on reservoir tank ?		
Yes	▶	GO TO 3.
No	▶	Fill up brake fluid. GO TO 3.

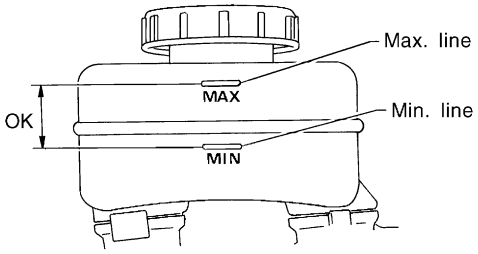

SBR451D

3	CHECK BRAKE LINE	
Check brake line for leakage.		
Is leakage present at or around brake lines, tubes or hoses or are any of these parts cracked or damaged?		
Yes	▶	Repair. GO TO 4.
No	▶	GO TO 4.

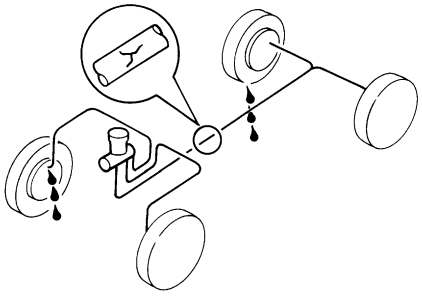

SBR389C

4	CHECK BRAKE BOOSTER OPERATION

Check brake booster for operation and air tightness.
Refer to "BRAKE BOOSTER", BR-16.

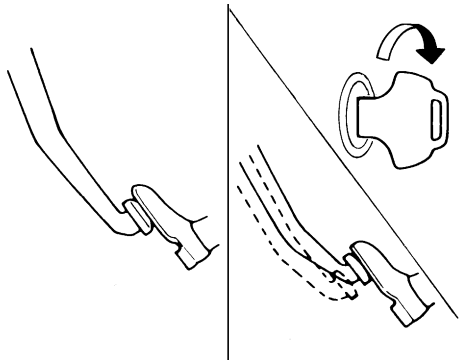

SBR058C

Is brake booster airtight and functioning properly?

Yes	▶	GO TO 5.
No	▶	Replace. GO TO 5.

5	CHECK BRAKE PAD AND ROTOR

Check brake pad and rotor.
Refer to BR-19, 21.

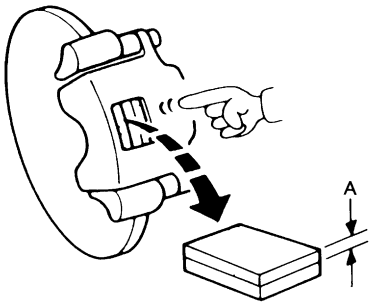

SBR059C

Are brake pads and rotors functioning properly?

Yes	▶	GO TO 6.
No	▶	Replace.

6	RECHECK BRAKE FLUID LEVEL

Check brake fluid level in reservoir tank again.

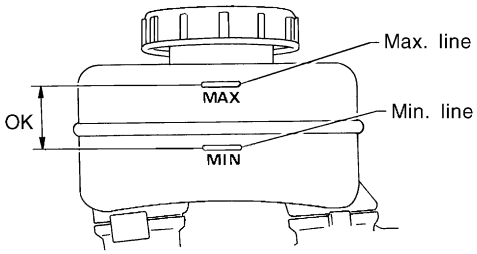

SBR451D

Is brake fluid filled between MAX and MIN lines on reservoir tank ?

Yes	▶	GO TO 7.
No	▶	Fill up brake fluid.

7	CHECK WARNING LAMP ACTIVATION

Check warning lamp activation.

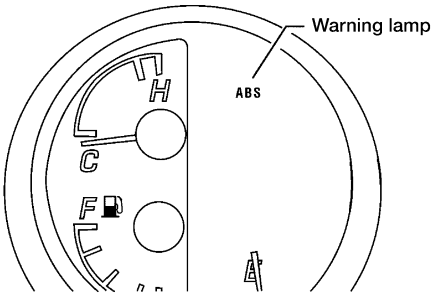

LBR380

Does warning lamp turn on when ignition switch is turned ON?

Yes	▶	GO TO 8.
No	▶	Check fuse, warning lamp bulb and warning lamp circuit.

8	CHECK WARNING LAMP DEACTIVATION

Check warning lamp for deactivation after engine is started.

Does warning lamp turn off when engine is started?

Yes	▶	GO TO 9.
No	▶	Go to "Self-diagnosis", BR-46.

9	DRIVE VEHICLE

Drive vehicle at speeds over 30 km/h (19 MPH) for at least one minute.

Does warning lamp remain off after vehicle has been driven at 30 km/h (19 MPH) for at least one minute?

Yes	▶	**INSPECTION END**
No	▶	Go to "Self-diagnosis", BR-46.

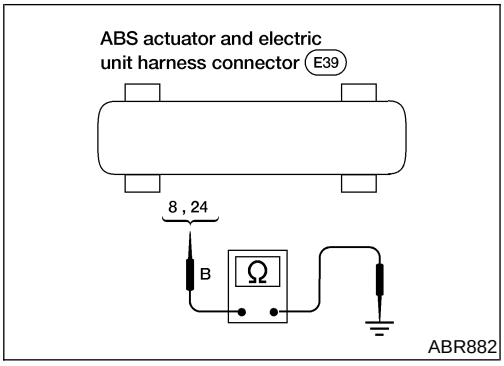

Ground Circuit Check

=NGBR0102

ABS ACTUATOR AND ELECTRIC UNIT GROUND

NGBR0102S01

- Check continuity between ABS actuator and electric unit connector terminals and ground.

  Continuity should exist.

Component Parts and Harness Connector Location

NGBR0094

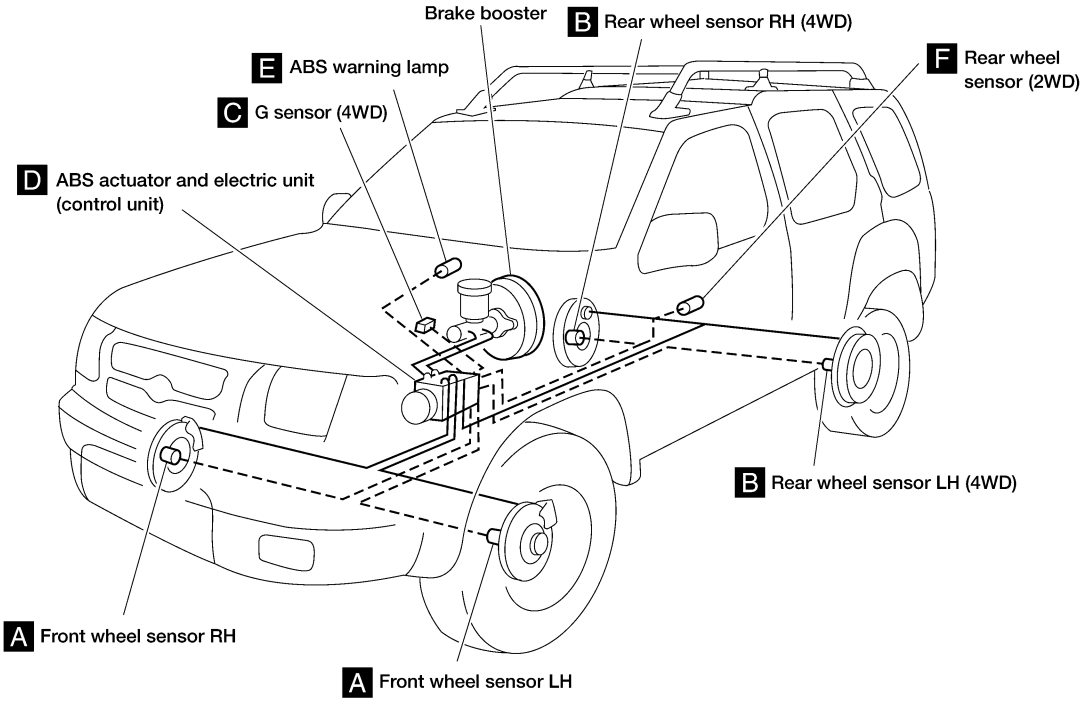

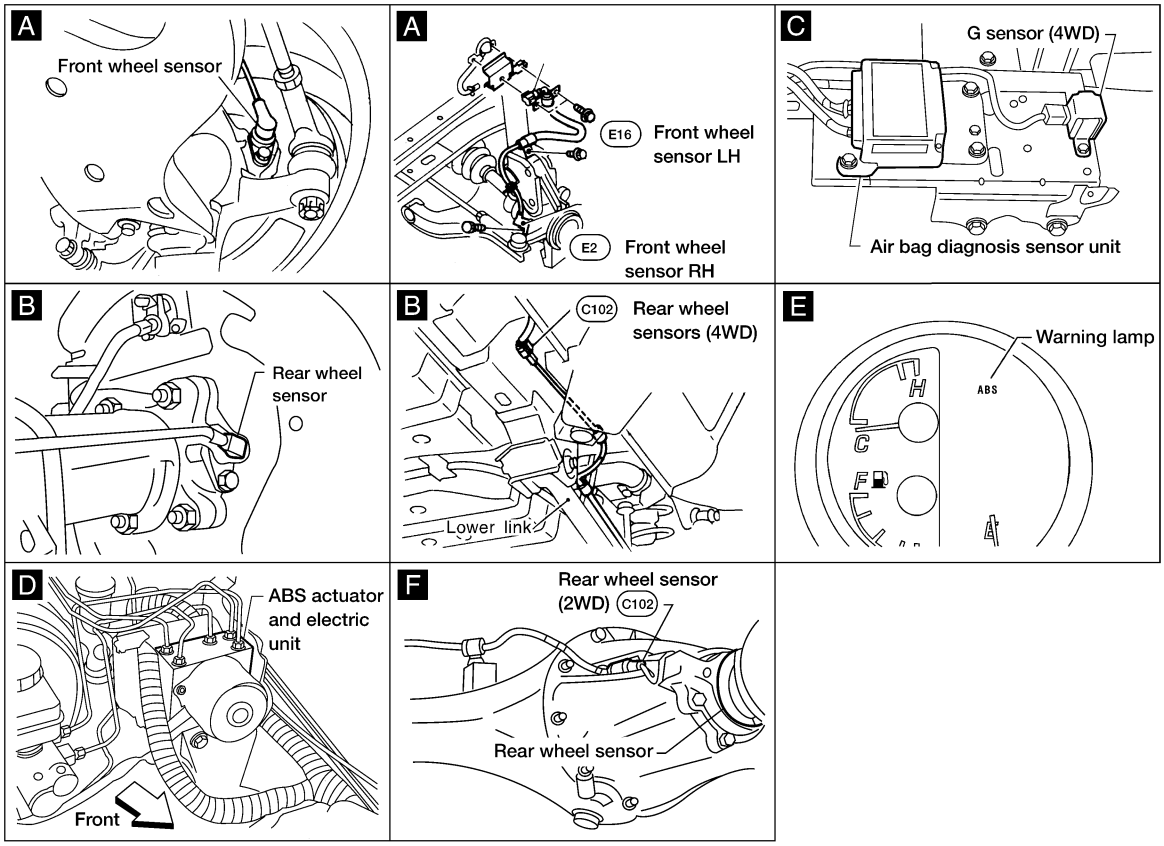

LBR381

Schematic

2–WHEEL DRIVE

NGBR0095

NGBR0095S01

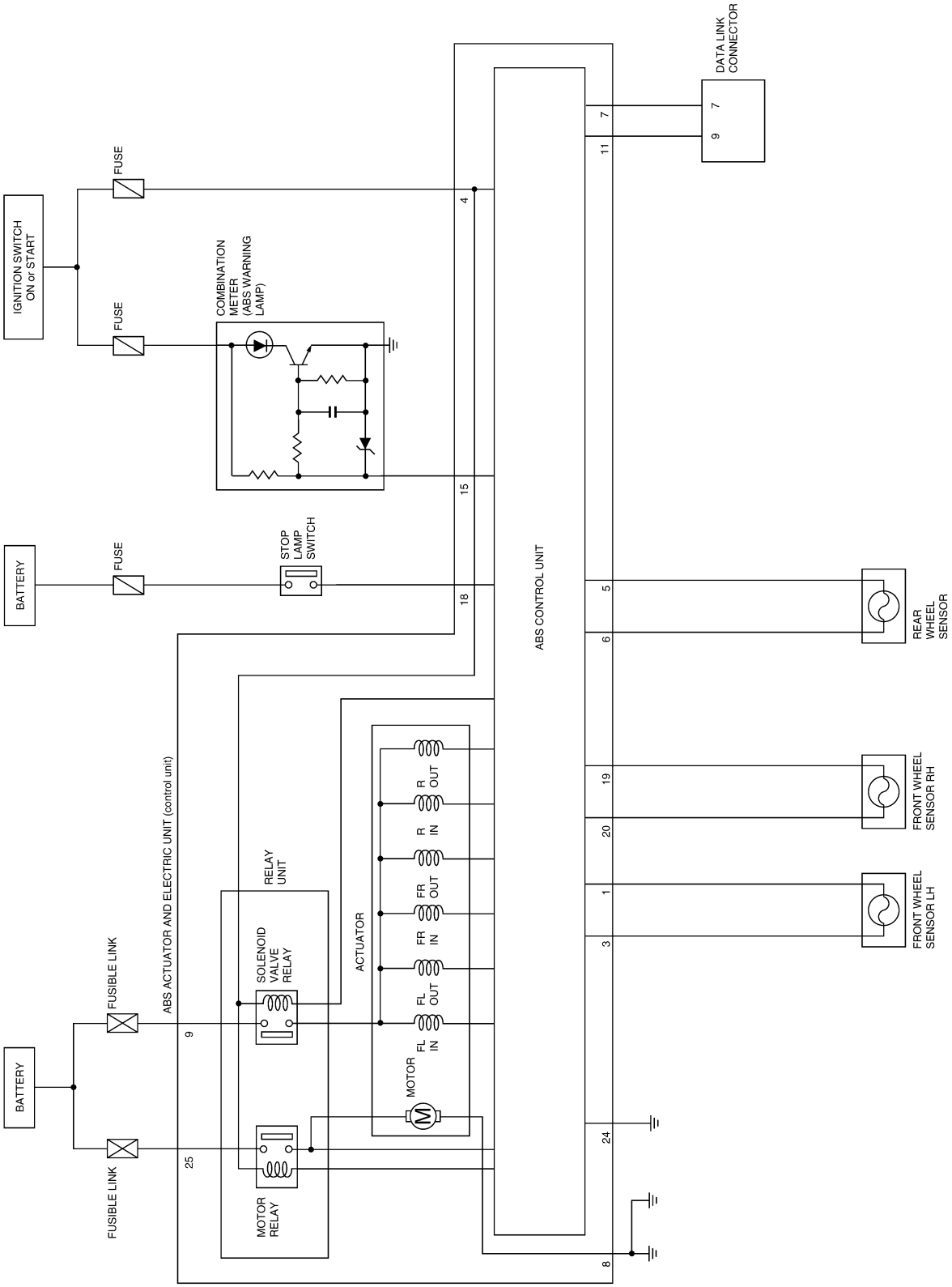

WBR339

4–WHEEL DRIVE

NGBR0095S02

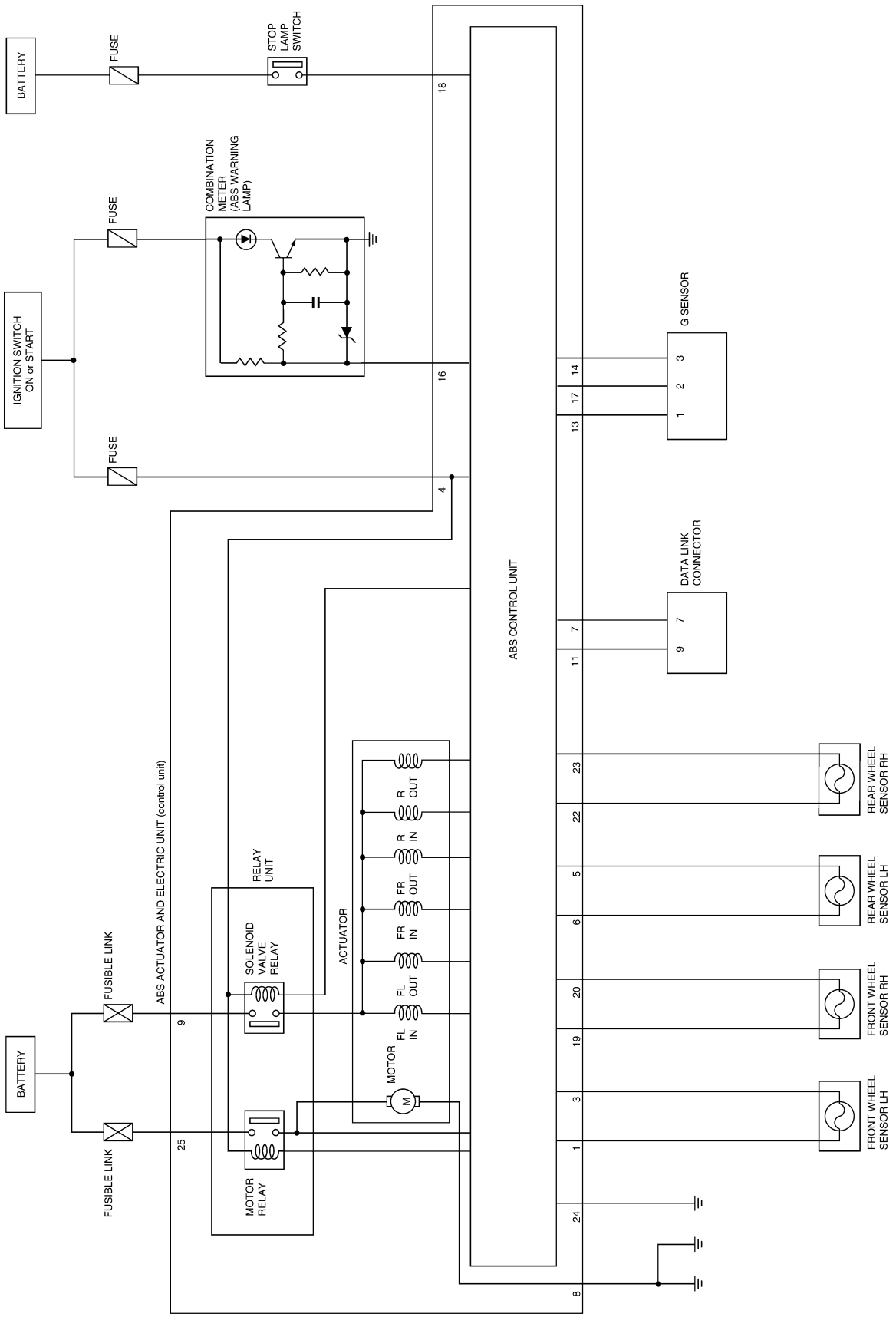

WBR190

Wiring Diagram — ABS — 2WD —

NGBR0096

BR-ABS-01

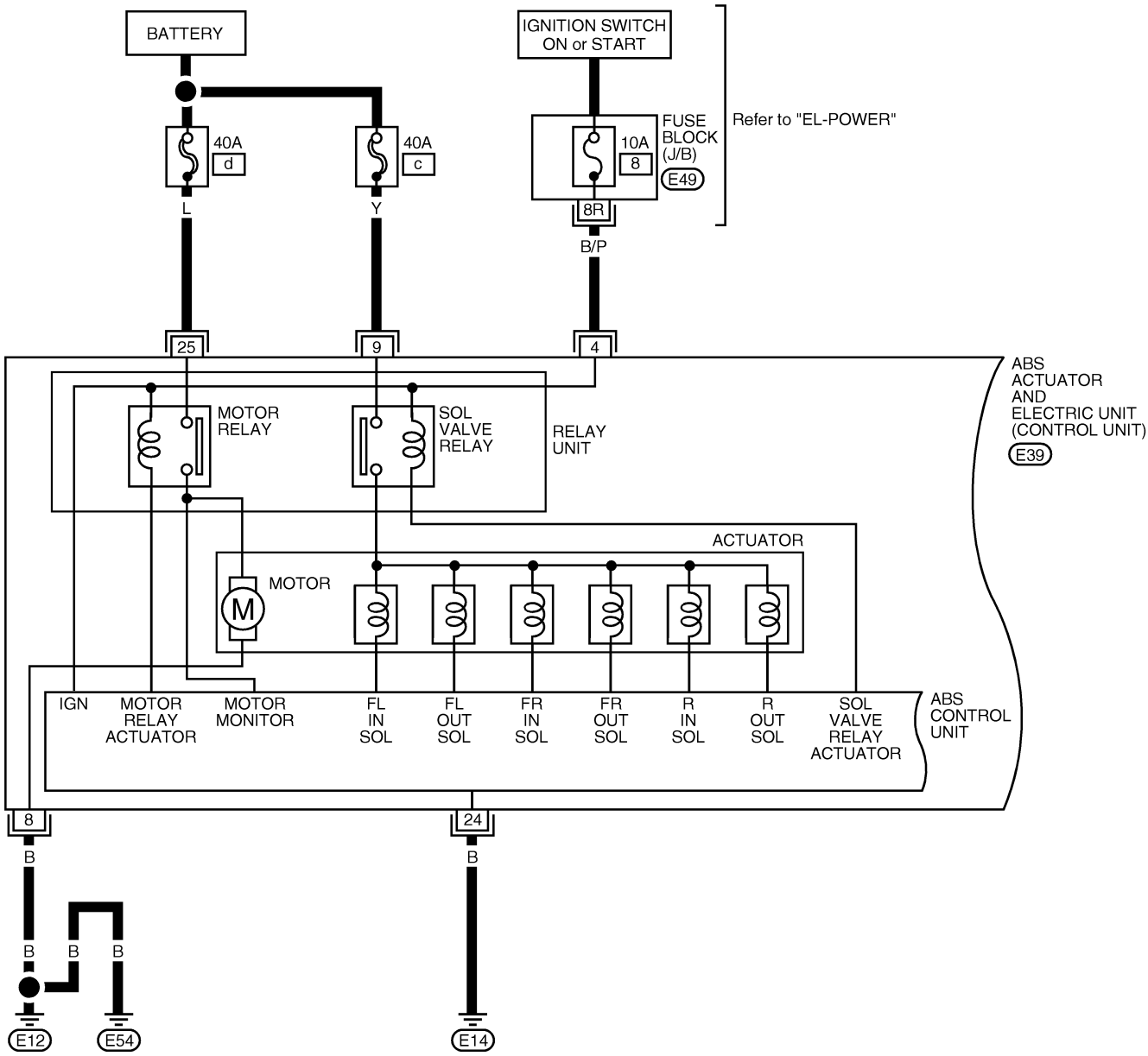

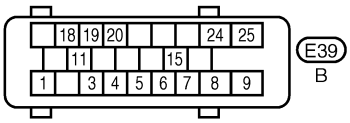

LBR090

BR-ABS-02

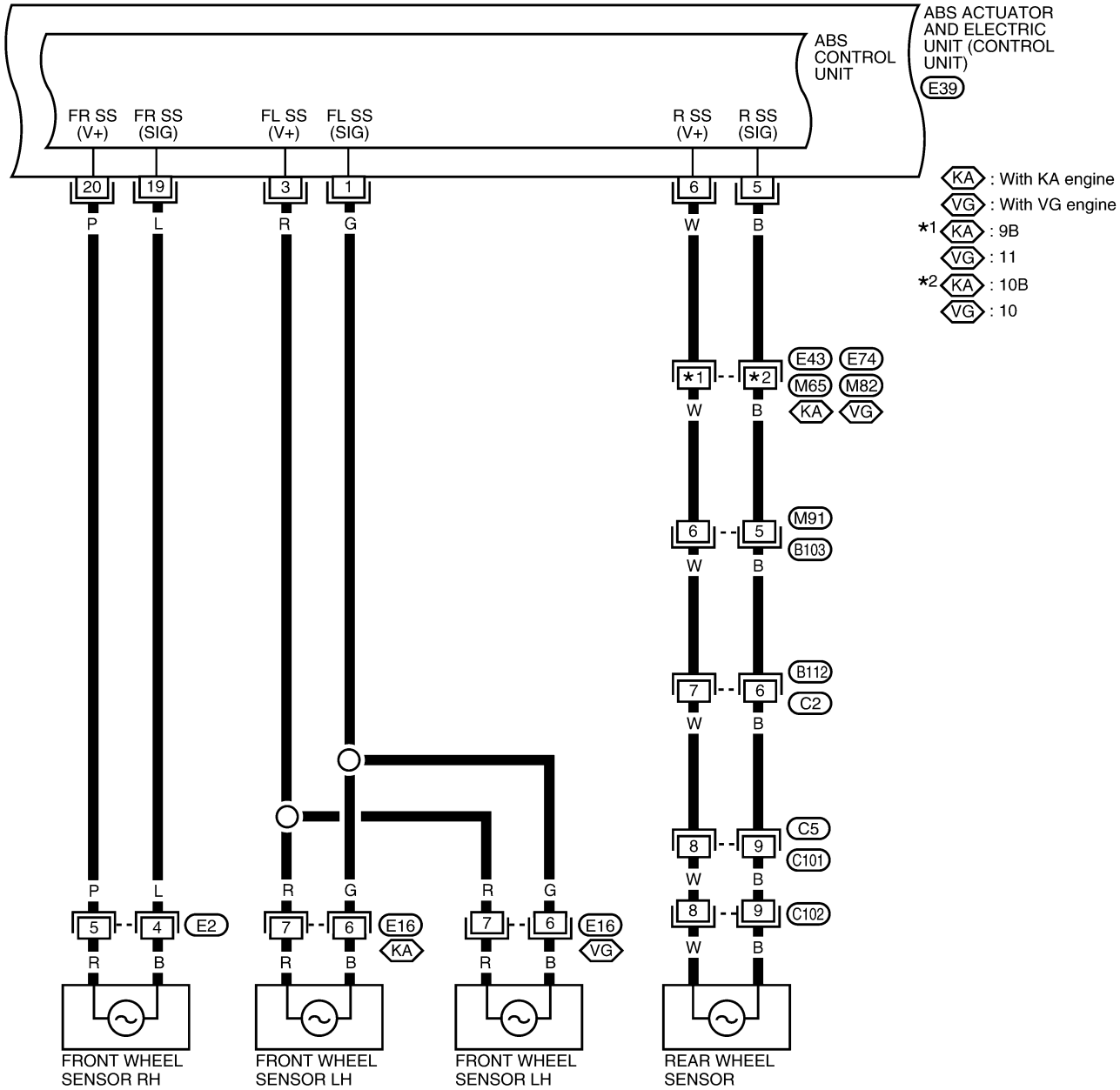

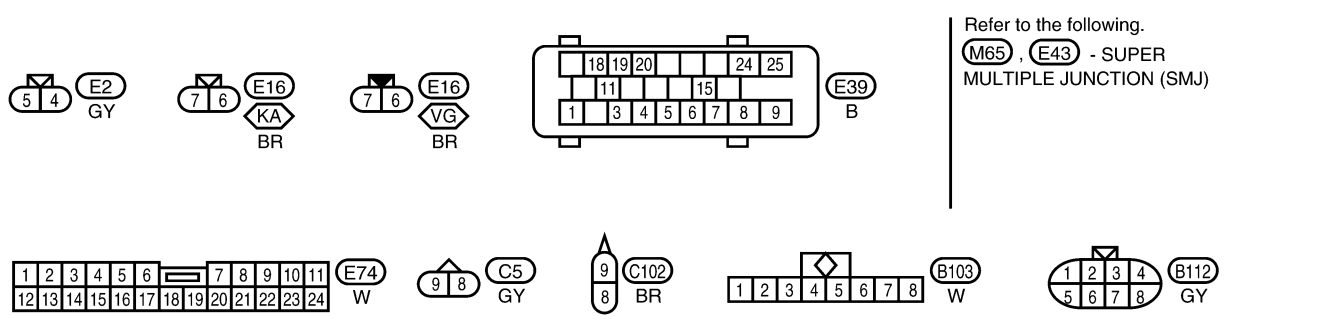

WBR193

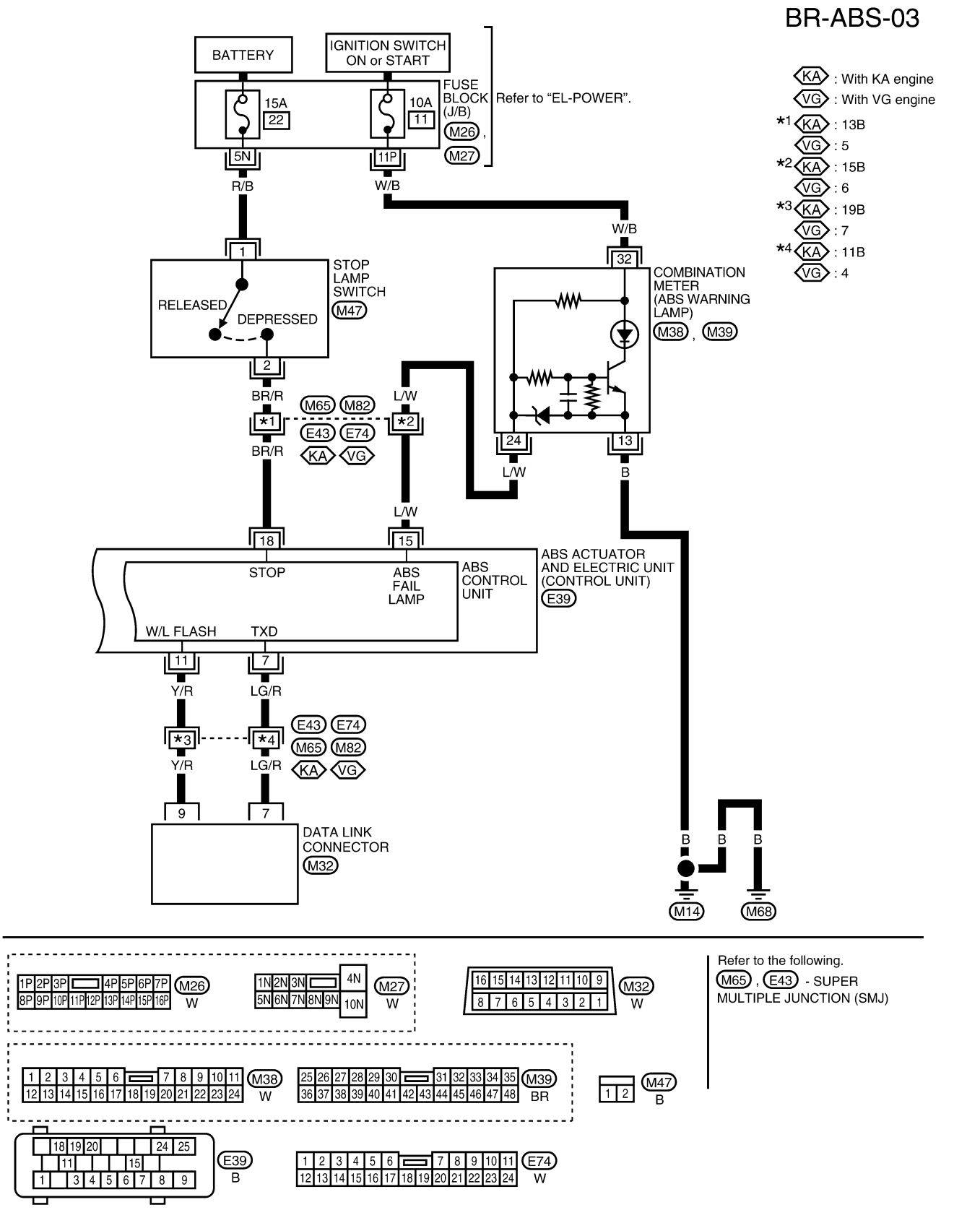
BR-ABS-03
BATTERY
IGNITION SWITCH ON or START
FUSE BLOCK (J/B)
M26, M27
Refer to "EL-POWER".
15A
22
10A
11
5N
11P
R/B
W/B
KA : With KA engine
VG : With VG engine
*1 KA : 13B
VG : 5
*2 KA : 15B
VG : 6
*3 KA : 19B
VG : 7
*4 KA : 11B
VG : 4
1
STOP LAMP SWITCH
M47
RELEASED
DEPRESSED
2
BR/R
M65 M82
E43 E74
KA VG
*1
*2
L/W
32
COMBINATION METER (ABS WARNING LAMP)
M38, M39
24
13
18
15
STOP
ABS FAIL LAMP
ABS CONTROL UNIT
ABS ACTUATOR AND ELECTRIC UNIT (CONTROL UNIT)
E39
W/L FLASH
TXD
11
7
Y/R
LG/R
*3
*4
9
DATA LINK CONNECTOR
M32
B
M14
M68
M26
M27
M32
M38
M39
M47
E39
E74
Refer to the following.
M65, E43 - SUPER MULTIPLE JUNCTION (SMJ)
LBR382

Wiring Diagram — ABS — 4WD —

NGBR0122

BR-ABS-04

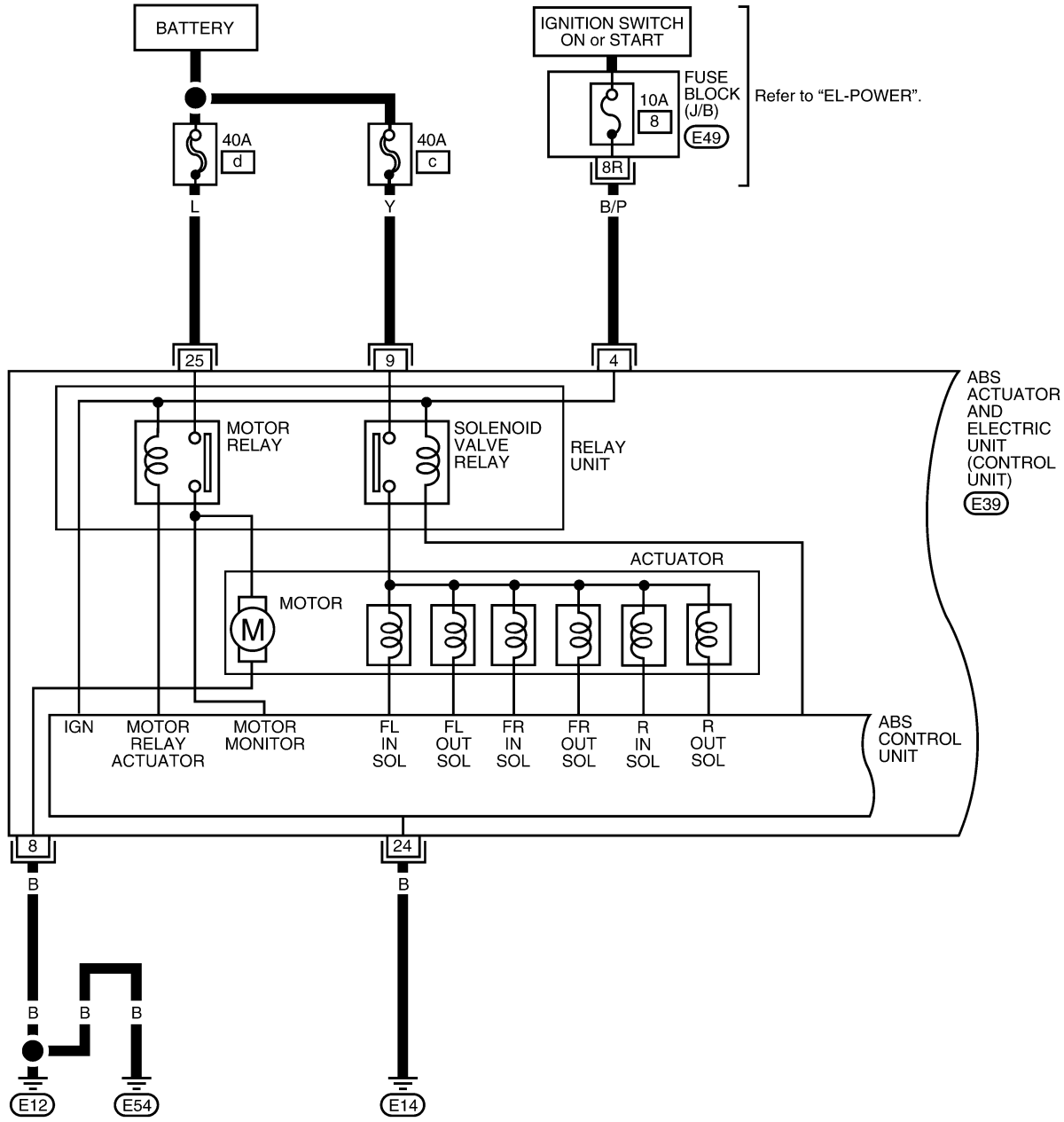

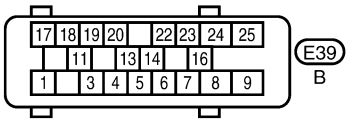

WBR340

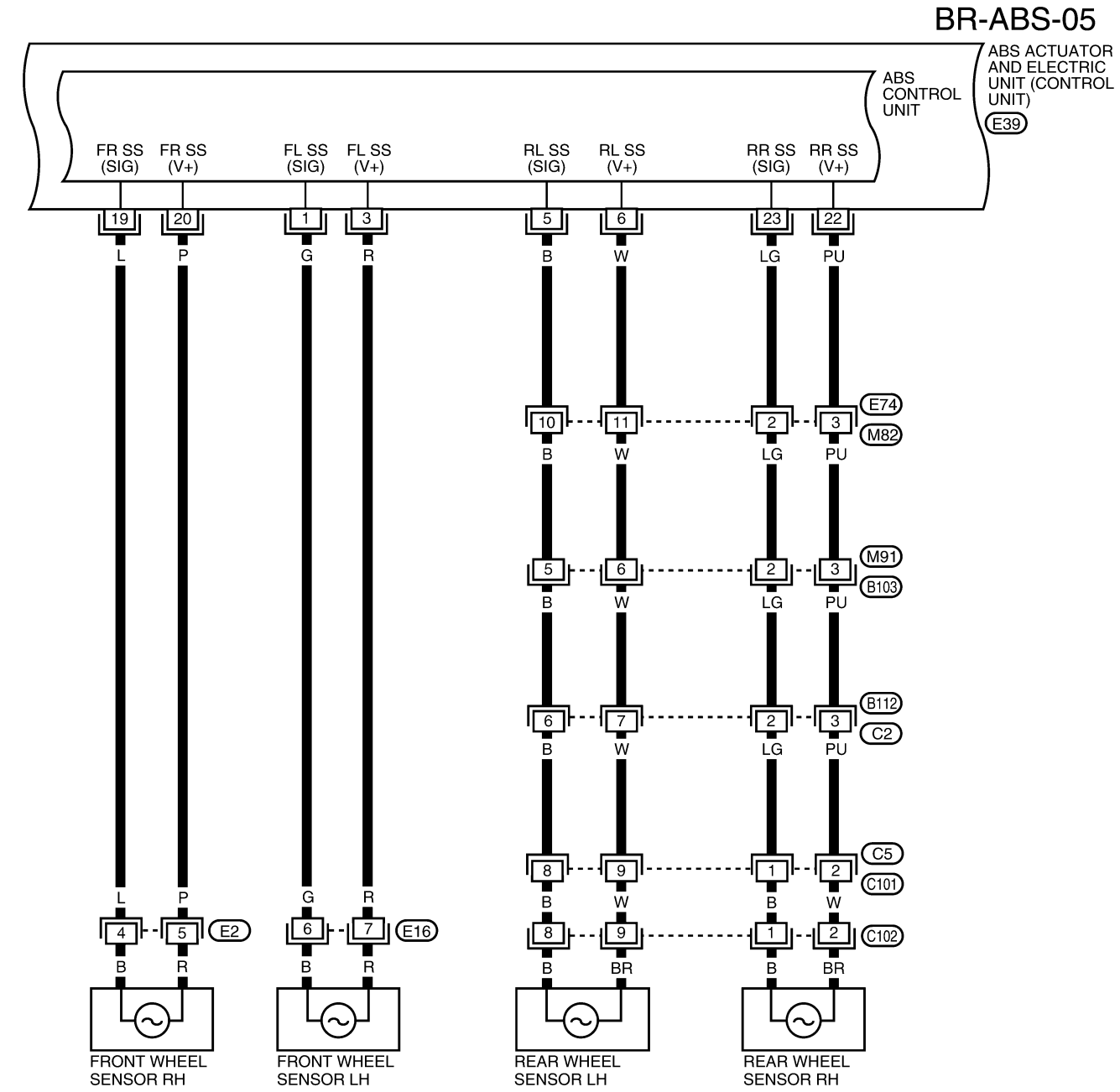
BR-ABS-05
ABS ACTUATOR AND ELECTRIC UNIT (CONTROL UNIT)
E39
ABS CONTROL UNIT
FR SS (SIG)
FR SS (V+)
FL SS (SIG)
FL SS (V+)
RL SS (SIG)
RL SS (V+)
RR SS (SIG)
RR SS (V+)
19
20
1
3
5
6
23
22
L
P
G
R
B
W
LG
PU
E74
M82
M91
B103
B112
C2
C5
C101
C102
E2
E16
BR
FRONT WHEEL SENSOR RH
FRONT WHEEL SENSOR LH
REAR WHEEL SENSOR LH
REAR WHEEL SENSOR RH

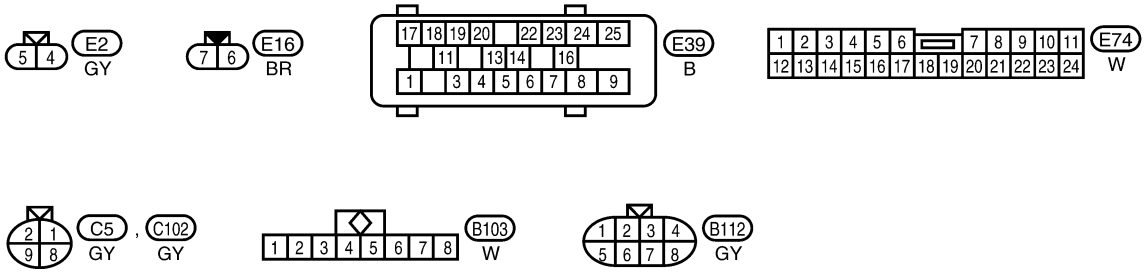
E2
GY
E16
BR
E39
B
E74
W
C5
GY
C102
GY
B103
W
B112
GY

WBR195

BR-ABS-06

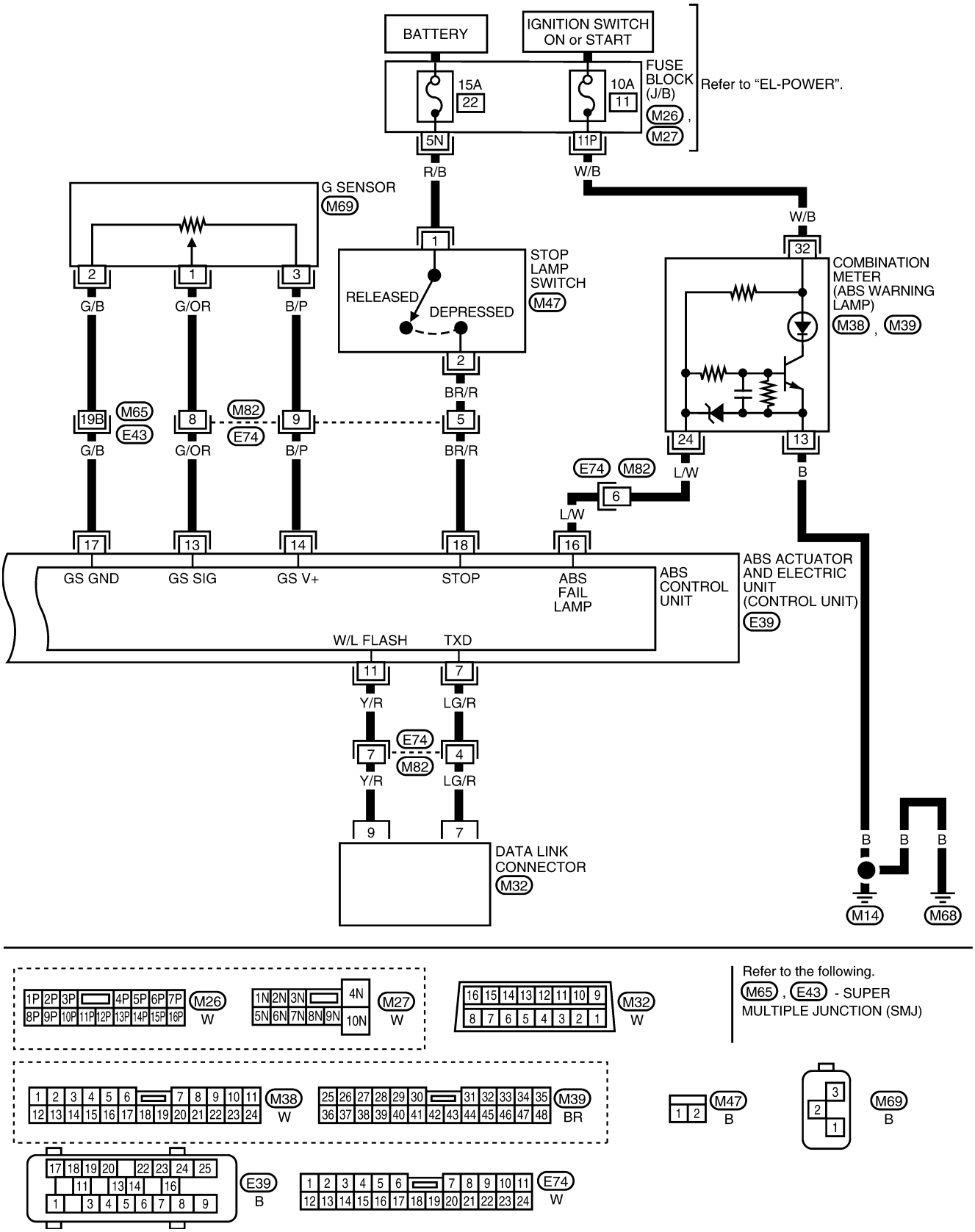
BATTERY
IGNITION SWITCH ON or START
FUSE BLOCK (J/B)
M26, M27
Refer to "EL-POWER".
15A
22
10A
11
5N
11P
R/B
W/B
G SENSOR
M69
STOP LAMP SWITCH
M47
RELEASED
DEPRESSED
BR/R
COMBINATION METER (ABS WARNING LAMP)
M38, M39
G/B
G/OR
B/P
M65
E43
M82
E74
L/W
B
ABS ACTUATOR AND ELECTRIC UNIT (CONTROL UNIT)
E39
GS GND
GS SIG
GS V+
STOP
ABS FAIL LAMP
ABS CONTROL UNIT
W/L FLASH
TXD
Y/R
LG/R
DATA LINK CONNECTOR
M32
M14
M68
Refer to the following.
M65, E43 - SUPER MULTIPLE JUNCTION (SMJ)
M26
M27
M32
M38
M39
M47
M69
E39
E74
WBR196

Self-diagnosis (Without CONSULT-II)

NGBR0097

FUNCTION

NGBR0097S01

- When a problem occurs in the ABS, the warning lamp on the instrument panel comes on. [To start the self-diagnostic results mode, ground the self-diagnostic (check) terminal 9 located on the “Data link connector”. The location of the malfunction is indicated by the warning lamp flashing]

SELF-DIAGNOSIS PROCEDURE

NGBR0097S02

1. Drive vehicle over 30 km/h (19 MPH) for at least one minute.
2. Turn ignition switch OFF.
3. Ground terminal 9 of data link connector with a suitable harness.
4. Turn ignition switch ON while grounding terminal 9.
   Do not depress brake pedal.

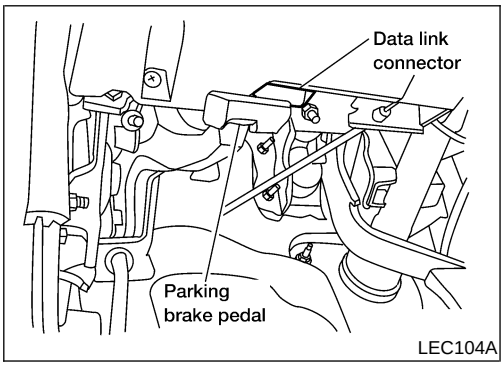

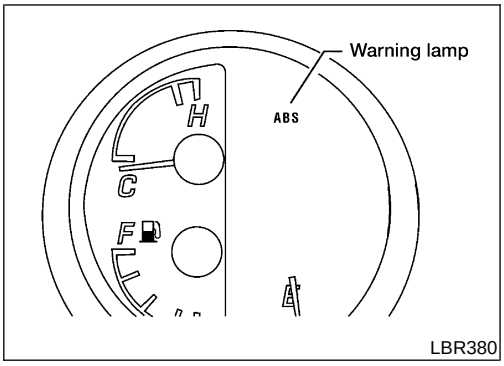

5. After 3.0 seconds, the warning lamp starts flashing to indicate the malfunction code No. (See NOTE.)
6. Verify the location of the malfunction with the malfunction code chart. Refer to “Malfunction Code/Symptom Chart”, BR-48. Then make the necessary repairs following the diagnostic procedures.
7. After the malfunctions are repaired, erase the malfunction codes stored in the control unit. Refer to “HOW TO ERASE SELF-DIAGNOSTIC RESULTS (MALFUNCTION CODES)”, BR-47.
8. Rerun the self-diagnostic results mode to verify that the malfunction codes have been erased.

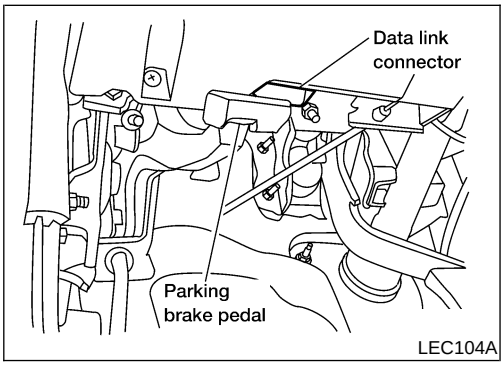

9. Disconnect the data link connector terminal from the ground. The self-diagnostic results mode is now complete.
10. Check warning lamp for deactivation after driving vehicle over 30 km/h (19 MPH) for at least one minute.
11. After making certain that warning lamp does not come on, test the ABS in a safe area to verify that it functions properly.

NOTE:
The indication terminates after 5 minutes.
However, when the ignition switch is turned from OFF to ON, the indication starts flashing again.

HOW TO READ SELF-DIAGNOSTIC RESULTS (MALFUNCTION CODES)

=NGBR0097S03

1. Determine the code No. by counting the number of times the warning lamp flashes on and off.
2. When several malfunctions occur at one time, up to three code numbers can be stored; the latest malfunction will be indicated first.
3. The indication begins with the start code 12. After that a maximum of three code numbers appear in the order of the lowest to highest. The indication then returns to the start code 12 to repeat (the indication will stay on for five minutes at the most).
4. Refer to "Malfunction Code/Symptom Chart", BR-48.

Example: Code No. 32 REAR SENSOR SHORT-CIRCUIT

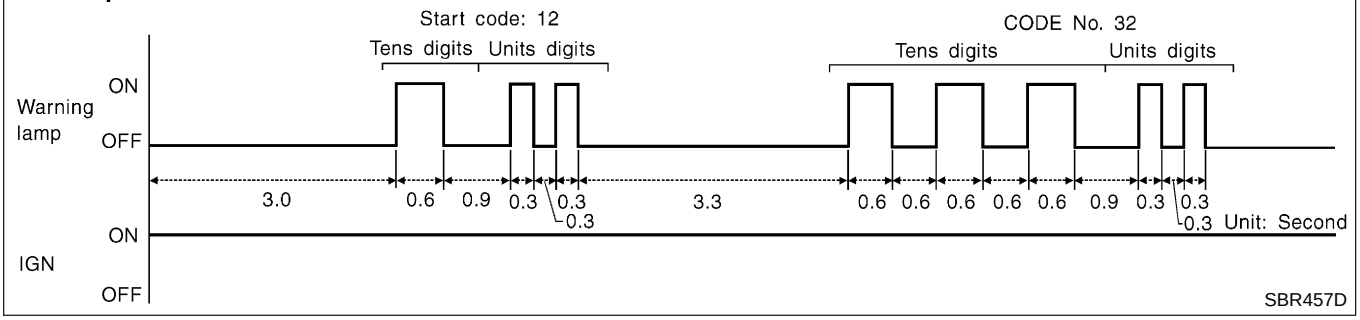

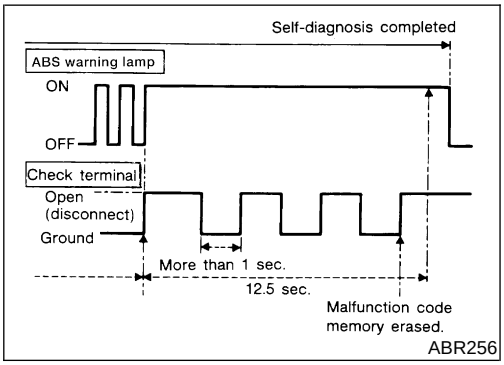

HOW TO ERASE SELF-DIAGNOSTIC RESULTS (MALFUNCTION CODES)

NGBR0097S04

1. Disconnect the check terminal from ground (ABS warning lamp will stay lit).
2. Within 12.5 seconds, ground the check terminal three times. Each terminal ground must last more than 1 second. The ABS warning lamp goes out after the erase operation has been completed.
3. Perform self-diagnosis again. Refer to "Self-diagnosis", BR-46. Only the startcode should appear, no malfunction codes.

Malfunction Code Chart (Without CONSULT-II)

NGBR0103

Code No. (No. of warning lamp flashes)	Malfunctioning part	Reference Page
12	Self-diagnosis could not detect any malfunctions.	—
17 ★1	G sensor and circuit (4WD)	BR-64
18 ★1	Sensor rotor or abnormal tire size	BR-55
21 ★1	Front right sensor	BR-55
25 ★1	Front left sensor	BR-55
31 ★1	Rear right sensor (4WD)	BR-55
35 ★1	Rear left sensor (4WD) Rear sensor (2WD)	BR-55
57 ★2	Abnormal battery voltage (High or low voltage)	BR-62
61 ★3	Actuator motor or motor relay	BR-60
63	Solenoid valve relay	BR-58
71	Control unit or Actuator solenoid valve	BR-58, 66

★1: If one or more wheels spin on a rough or slippery road for 40 seconds or more, the ABS warning lamp will illuminate. This does not indicate a malfunction. Only in the case of the short-circuit (Code Nos. 25, 21, 31 and 35), after repair the ABS warning lamp also illuminates when the ignition switch is turned ON. In this case, drive the vehicle at speeds greater than 30 km/h (19 MPH) for approximately 1 minute as specified in “SELF-DIAGNOSIS PROCEDURE”, BR-46. Check to ensure that the ABS warning lamp goes out while the vehicle is being driven.

★2: The trouble code “57”, which refers to a low power supply voltage, does not indicate that the ABS control unit is malfunctioning. Do not replace the ABS control unit with a new one.

★3: The trouble code “61” can sometimes appear when the ABS motor is not properly grounded. If it appears, be sure to check the condition of the ABS motor ground circuit connection.

Symptom Chart

NGBR0125

Symptom	Malfunctioning part	Reference Page
ABS works frequently	—	BR-67
Unexpected pedal action	—	BR-67
Long stopping distance	—	BR-69
ABS does not work	—	BR-69
Pedal vibration and noise	—	BR-69
Warning lamp does not come on when ignition switch is turned ON.	Fuse, warning lamp bulb or warning lamp circuit Control unit	BR-70
Warning lamp stays on when ignition switch is turned ON.	Control unit power supply circuit Warning lamp bulb circuit Control unit or control unit connector Solenoid valve relay stuck Power supply for solenoid valve relay coil	BR-71

CONSULT-II

=NGBR0123

CONSULT-II APPLICATION TO ABS

NGBR0123S01

ITEM	SELF-DIAGNOSTIC RESULTS	DATA MONITOR	ACTIVE TEST
Front right wheel sensor	×	×	—
Front left wheel sensor	×	×	—
Rear right wheel sensor★1	×	×	—
Rear left wheel sensor★1	×	×	—
Rear wheel sensor★2	×	×	—
G switch (G sensor)★1	×	×	×
ABS sensor	×	—	—
Stop lamp switch	—	×	—
Front right inlet solenoid valve	×	×	×
Front right outlet solenoid valve	×	×	×
Front left inlet solenoid valve	×	×	×
Front left outlet solenoid valve	×	×	×
Rear inlet solenoid valve	×	×	×
Rear outlet solenoid valve	×	×	×
Actuator solenoid valve relay	×	×	—
Actuator motor relay (MOTOR RELAY is shown on the Data Monitor screen.)	×	×	×
ABS warning lamp	—	×	—
Battery voltage	×	×	—
Control unit	×	—	—
ABS operating signal	—	×	×

×: Applicable
—: Not applicable
★1: 4WD models only
★2: 2WD models only

ECU (ABS CONTROL UNIT) PART NUMBER MODE

NGBR0123S02

Ignore the ECU part number displayed in the ECU PART NUMBER MODE. Refer to parts catalog to order the ECU.

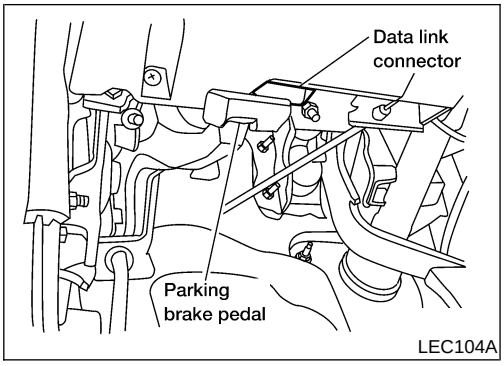

LEC104A

CONSULT-II Inspection Procedure

=NGBR0124

SELF-DIAGNOSIS PROCEDURE

NGBR0124S01

1. Turn ignition switch OFF.
2. Connect CONSULT-II to data link connector.
3. Start engine.
4. Drive vehicle over 30 km/h (19 MPH) for at least one minute.

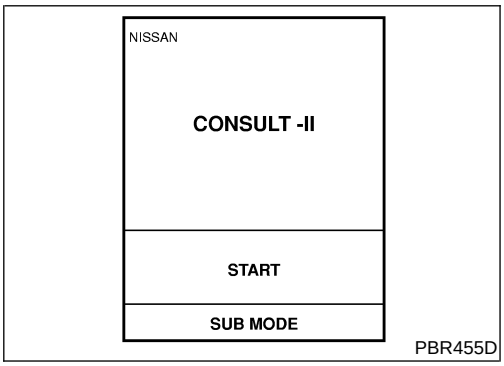

PBR455D

5. Stop vehicle with engine running and touch “START” on CONSULT-II screen.

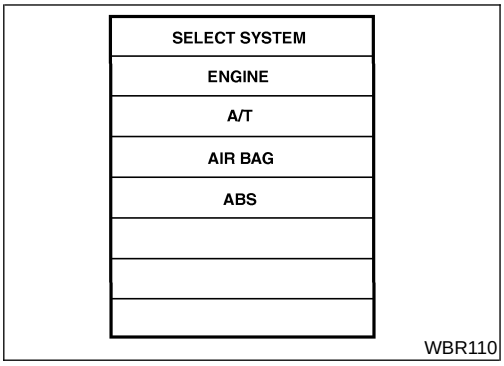

WBR110

6. Touch “ABS”.

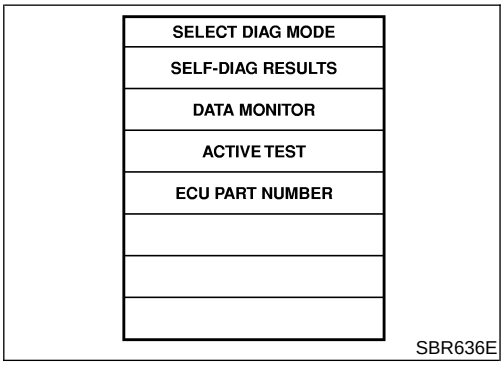

SBR636E

7. Touch “SELF-DIAG RESULTS”.

- The screen shows the detected malfunction and how many times the ignition switch has been turned ON since the malfunction.

8. Make the necessary repairs following the diagnostic procedures.

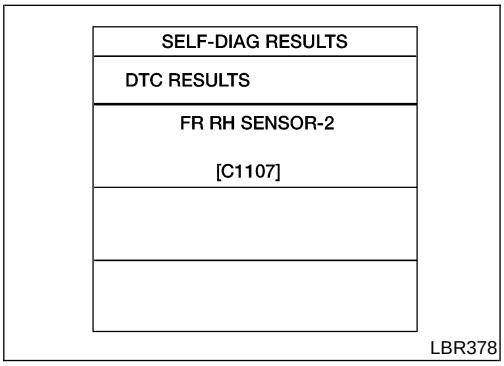

LBR378

9. After the malfunctions are repaired, erase the self-diagnostic results stored in the control unit by touching “ERASE”.
10. Check warning lamp for deactivation after driving vehicle over 30 km/h (19 MPH) for at least one minute.
11. Test the ABS in a safe area to verify that it functions properly.

SELF-DIAGNOSTIC RESULTS MODE

=NGBR0124S02

Diagnostic item	Diagnosed condition	Diagnostic item is detected when ...	Reference Page
FR RH SENSOR-2★1 [C1107]	Open	● Circuit for front right wheel sensor is open. (An abnormally high input voltage is entered.)	BR-55
FR LH SENSOR-2★1 [C1108]	Open	● Circuit for front left wheel sensor is open. (An abnormally high input voltage is entered.)	BR-55
RR RH SENSOR-2★1 [C1105]	Open	● Circuit for rear right sensor is open. (An abnormally high input voltage is entered.)	BR-55
RR LH SENSOR-2★1 [C1106]	Open	● Circuit for rear left sensor (4WD) or rear sensor (2WD) is open. (An abnormally high input voltage is entered.)	BR-55
FR RH SENSOR-1★1 [C1103]	Short	● Circuit for front right wheel sensor is shorted. (An abnormally low input voltage is entered.)	BR-55
FR LH SENSOR-1★1 [C1104]	Short	● Circuit for front left wheel sensor is shorted. (An abnormally low input voltage is entered.)	BR-55
RR RH SENSOR-1★1 [C1101]	Short	● Circuit for rear right sensor is shorted. (An abnormally low input voltage is entered.)	BR-55
RR LH SENSOR-1★1 [C1102]	Short	● Circuit for rear left sensor (4WD) or rear sensor (2WD) is shorted. (An abnormally low input voltage is entered.)	BR-55
ABS SENSOR★1 [C1115]	Abnormal signal	● Teeth damage on sensor rotor or improper installation of wheel sensor. (Abnormal wheel sensor signal is entered.)	BR-55
MAIN RELAY [C1114]	Abnormal	● Actuator solenoid valve relay is ON, even if control unit sends off signal. ● Actuator solenoid valve relay is OFF, even if control unit sends on signal.	BR-58
PUMP MOTOR [C1111]	Abnormal	● Circuit for ABS motor relay is open or shorted. ● Circuit for actuator motor is open or shorted. ● Actuator motor relay is stuck.	BR-60
BATTERY VOLTAGE [ABNORMAL] [C1109]	High or low	● Power source voltage supplied to ABS control unit is abnormally high or low.	BR-62
CONTROLLER FAILURE [C1110]	Control unit	● Function of calculation in ABS control unit has failed.	BR-66
	Solenoid valve open/ short	● Circuit for solenoid valve is open or shorted. (An abnormally high or low output voltage is entered.)	BR-58
G SENSOR [C1113]★2	Abnormal signal	● G sensor circuit is open or shorted.	BR-64
ABNORMAL TIRE SIZE [C1112]	Abnormal	● Sensor rotor damaged or incorrect tire size.	BR-55

★1: If one or more wheels spin on a rough or slippery road for 40 seconds or more, the ABS warning lamp will illuminate. This does not indicate a malfunction. Only in the case of the short-circuit (Code Nos. C1101, C1102, C1103 and C1104), after repair the ABS warning lamp also illuminates when the ignition switch is turned ON. In this case, drive the vehicle at speeds greater than 30 km/h (19 MPH) for approximately 1 minute as specified in "SELF-DIAGNOSIS PROCEDURE", BR-46. Check to ensure that the ABS warning lamp goes out while the vehicle is being driven.

★2: 4WD models only

DATA MONITOR PROCEDURE

=NGBR0124S03

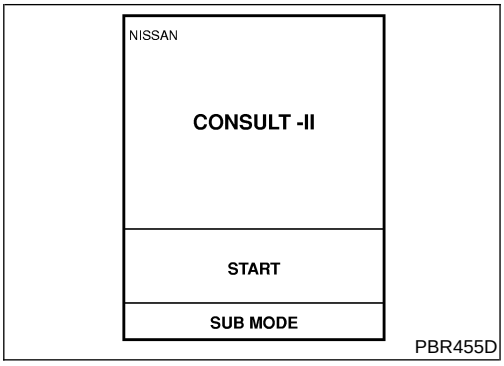

PBR455D

1. Turn ignition switch OFF.
2. Connect CONSULT-II to data link connector.
3. Turn ignition switch ON.
4. Touch "START" on CONSULT-II screen.

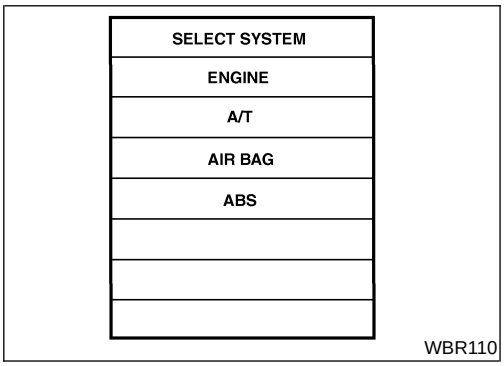

WBR110

5. Touch "ABS".

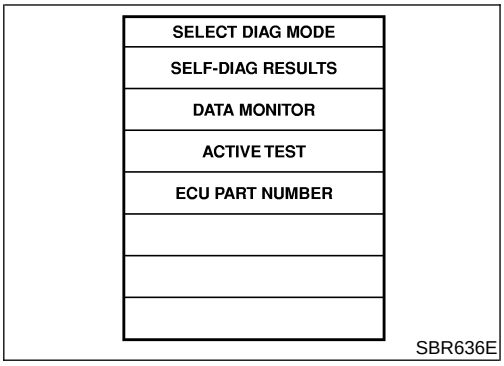

SBR636E

6. Touch "DATA MONITOR".

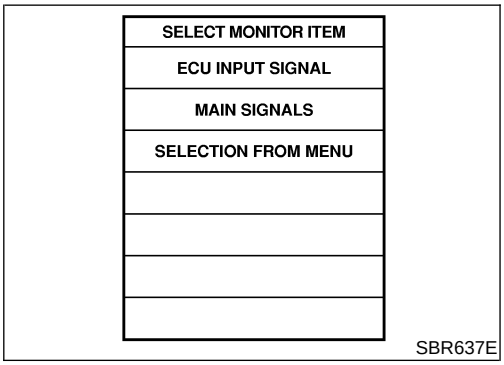

SBR637E

7. Touch "SETTING" on "SELECT MONITOR ITEM" screen.

ACTIVE TEST PROCEDURE

=NGBR0124S04

- When conducting Active test, vehicle must be stationary.
- When ABS warning lamp stays on, never conduct Active test.

1. Turn ignition switch OFF.
2. Connect CONSULT-II to data link connector.
3. Start engine.
4. Touch "START" on CONSULT-II screen.

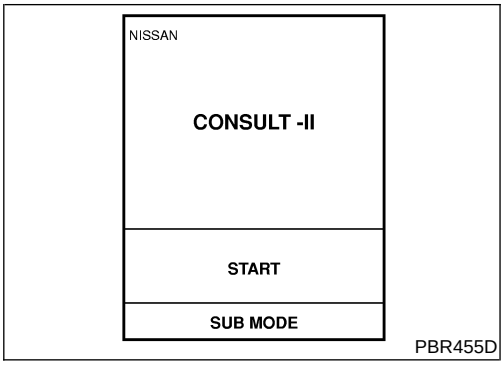

PBR455D

5. Touch "ABS".

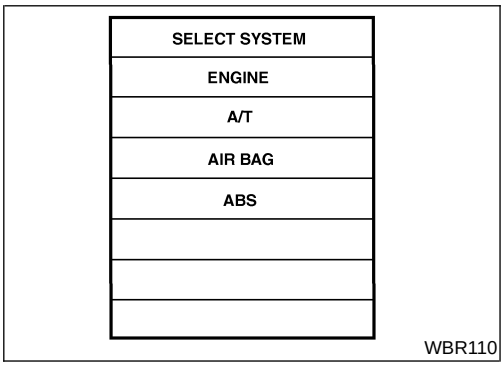

WBR110

6. Touch "ACTIVE TEST".

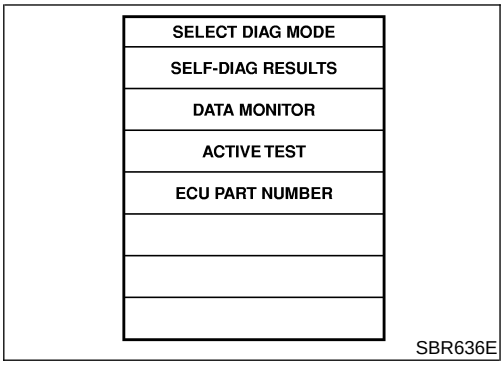

SBR636E

7. Select active test item by touching screen.

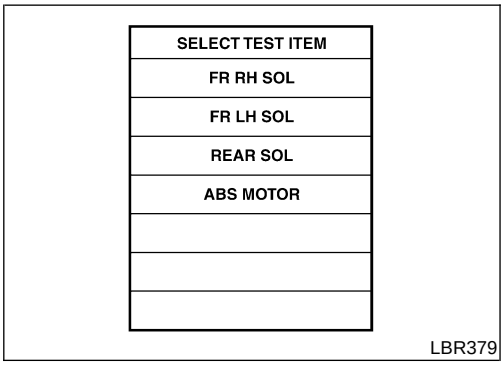

LBR379

8. Touch "START".
9. Carry out the active test by touching screen key.

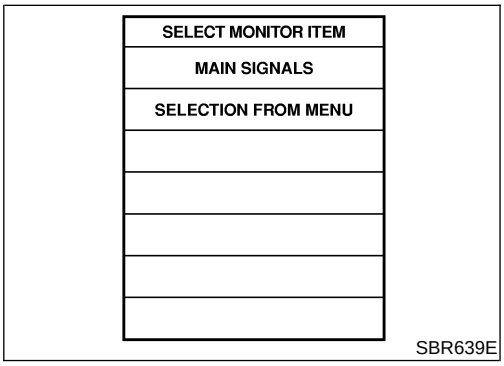

SBR639E

DATA MONITOR MODE

=NGBR0124S05

MONITOR ITEM	CONDITION	SPECIFICATION
FR RH SENSOR FR LH SENSOR RR RH SENSOR★2 RR LH SENSOR★2 REAR SENSOR★1	Drive vehicle. (Each wheel is rotating.)	Wheel speed signal (Almost the same speed as speedometer.)
STOP LAMP SW	Brake is depressed.	Depress the pedal: ON Release the pedal: OFF
DECEL G-SEN★2	Vehicle is driven. Vehicle is stopped. Brake is applied.	During sudden braking while driving on high μ roads (asphalt roads, etc.): OFF While vehicle is stopped or during constant-speed driving: ON
FR RH IN SOL FR RH OUT SOL FR LH IN SOL FR LH OUT SOL REAR IN SOL REAR OUT SOL	1. Drive vehicle at speeds over 30 km/h (19 MPH) for at least 1 minute. 2. Engine is running.	Operating conditions for each solenoid valve are indicated. ABS is not operating: OFF
MOTOR RELAY		ABS is not operating: OFF ABS is operating: ON
WARNING LAMP	Ignition switch is ON or engine is running.	ABS warning lamp is turned on: ON ABS warning lamp is turned off: OFF
BATTERY VOLT		Power supply voltage for control unit

★1: 2WD models only
★2: 4WD models only

ACTIVE TEST MODE

NGBR0124S06

TEST ITEM	CONDITION	JUDGEMENT		
FR RH SOL FR LH SOL REAR SOL	Engine is running.	Brake fluid pressure control operation		
			IN SOL	OUT SOL
		UP (Increase):	OFF	OFF
		KEEP (Hold):	ON	OFF
		DOWN (Decrease):	ON	ON
ABS MOTOR		ABS actuator motor ON: Motor runs (ABS motor relay ON) OFF: Motor stops (ABS motor relay OFF)		

NOTE:
Active test will automatically stop ten seconds after the test starts. (TEST IS STOPPED is displayed.)

Wheel Sensor or Rotor

DIAGNOSTIC PROCEDURE

NGBR0104

With CONSULT-II: Malfunction code No. C1101, C1102, C1103, C1104, C1105, C1106, C1107, C1108, C1112, or C1115

Without CONSULT-II: Malfunction code No. 21, 25, 31, 35, or 18

NOTE:
Wheel position should be distinguished by code No. except code No. 18 (sensor rotor).

1	INSPECTION START

Wheel sensor inspection

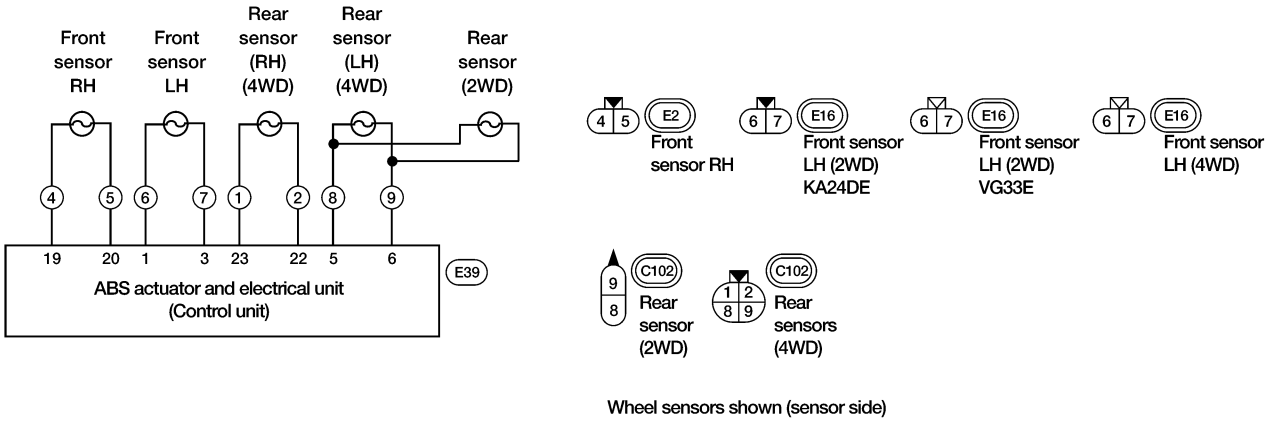

WBR351

	▶	GO TO 2.

2	CHECK CONNECTOR

1. Disconnect connectors from ABS actuator and electric unit and wheel sensor of malfunction code No. Check terminals for damage or loose connection. Then reconnect connectors.
2. Carry out “Self-diagnosis” again. Refer to BR-46.

Does warning lamp activate again?

Yes	▶	GO TO 3.
No	▶	**INSPECTION END**

3	CHECK TIRE

Check for inflation pressure, wear and size of each tire. (See NOTE)

Are tire pressure and size correct and is tire wear within specifications?

Yes	▶	GO TO 4.
No	▶	Adjust tire pressure or replace tire(s). (See NOTE)

4	CHECK WHEEL BEARING	
Check wheel bearing axial end play. (See NOTE) **Is wheel bearing axial end play within specifications? Refer to *AX-5*, "FRONT AXLE" and *AX-30*, "REAR AXLE".**		
Yes	▶	GO TO 5.
No	▶	Check wheel bearing. Refer to ***AX-15***, "FRONT AXLE" and ***AX-34***, "REAR AXLE".

5 CHECK WIRING HARNESS FOR SHORT

1. Disconnect ABS actuator and electric unit connector E39 and ABS sensor connectors E2, E16, and C102.
2. Check resistance between indicated wiring harness connector/terminal and ground
   Front RH wheel
   Connector E2, terminals 4 and 5
   Front LH wheel
   Connector E16, terminals 6 and 7
   Rear RH wheel (4WD)
   Connector C102, terminals 1 and 2
   4WD: Rear LH wheel, 2WD: Rear wheels
   Connector C102, terminals 8 and 9

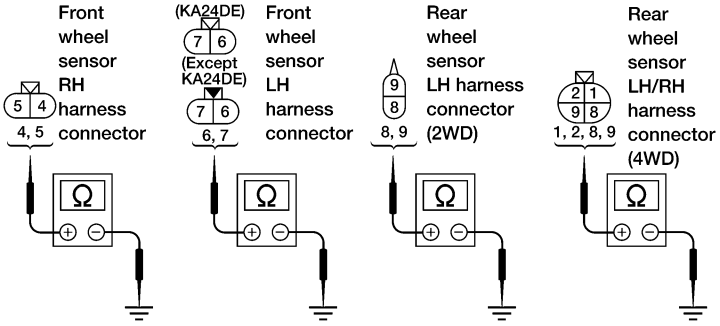

Terminals (+) Connector	Terminal (Wire color)	(-)	Continuity
E2	4 (L)	Ground	No
E2	5 (P)	Ground	No
E16	6 (G)	Ground	No
E16	7 (R)	Ground	No
C102	1 (B)	Ground	No
C102	2 (W)	Ground	No
C102	8 (B)	Ground	No
C102	9 (W)	Ground	No

WBR353

0Ω:NG
∞Ω:OK

Are resistance values OK?

Yes	▶	GO TO 6.
No	▶	Repair/replace harness or connectors.

6	CHECK WIRING HARNESS FOR OPEN

1. Disconnect ABS actuator and electric unit connector E39 and ABS sensor connectors E2, E16, and C102.
2. Check resistance of wiring harness between indicated connectors and terminals.
   Front RH wheel
   Connector E39, terminal 19 and connector E2, terminal 4
   Connector E39, terminal 20 and connector E2, terminal 5
   Front LH wheel
   Connector E39, terminal 1 and connector E16, terminal 6
   Connector E39, terminal 3 and connector E16, terminal 7
   Rear RH wheel (4WD)
   Connector E39, terminal 23 and connector C102, terminal 1
   Connector E39, terminal 22 and connector C102, terminal 2
   4WD: Rear LH wheel, 2WD: Rear wheels
   Connector E39, terminal 5 and connector C102, terminal 8
   Connector E39, terminal 6 and connector C102, terminal 9

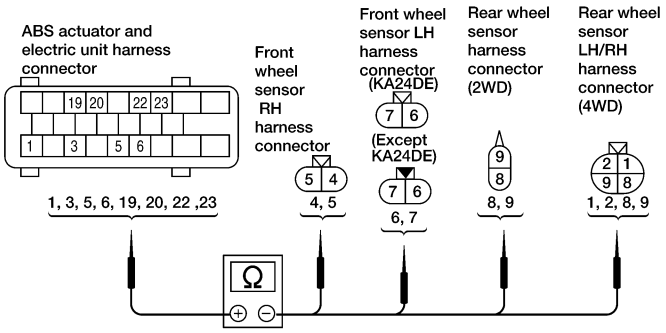

Terminals				Continuity
(+)		(-)		
Connector	Terminal (Wire color)	Connector	Terminal (Wire color)	
E39	1 (G)	E16	6 (G)	Yes
E39	3 (R)	E16	7 (R)	Yes
E39	19 (L)	E2	4 (L)	Yes
E39	20 (P)	E2	5 (P)	Yes
E39	23 (LG)	C102	1 (B)	Yes
E39	22 (PU)	C102	2 (W)	Yes
E39	5 (B)	C102	8 (B)	Yes
E39	6 (W)	C102	9 (W)	Yes

LBR342

0Ω:OK
∞Ω:NG

Are resistance values OK?

Yes	▶	GO TO 7.
No	▶	Repair/replace harness or connectors.

7	CHECK SENSOR ROTOR

Check sensor rotor for teeth damage. (See NOTE)

Is sensor rotor free from damage?

Yes	▶	1. Check ABS actuator and electric unit pin terminals for damage or the connection of ABS actuator and electric unit harness connector. Reconnect ABS actuator and electric unit harness connector, then retest. 2. If retest is NG, replace wheel speed sensor.
No	▶	Replace sensor rotor. (See NOTE)

ABS Actuator Solenoid Valve or Solenoid Valve Relay

DIAGNOSTIC PROCEDURE

=NGBR0105

With CONSULT-II: Malfunction code No. C1110 or C1114
Without CONSULT-II: Malfunction code No. 63 or 71

1	INSPECTION START

Solenoid valve relay inspection

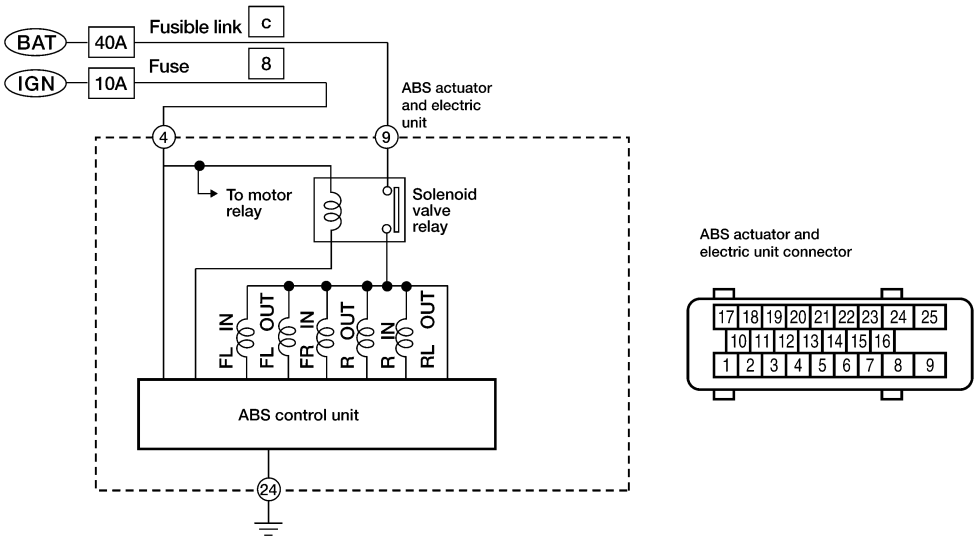

WBR338

▶	GO TO 2.

2	CHECK FUSIBLE LINK

Check 40A fusible link **c**. For fusible link layout, refer to ***EL-10***, “POWER SUPPLY ROUTING”.

Is fusible link OK?

Yes	▶	GO TO 3.
No	▶	GO TO 6.

3	CHECK CONNECTOR

1. Disconnect connector from ABS actuator and electric unit. Check terminals for damage or loose connection. Then reconnect connector.
2. Carry out self-diagnosis again.

Does warning lamp activate again?

Yes	▶	GO TO 4.
No	▶	**INSPECTION END**

4	CHECK ABS ACTUATOR AND ELECTRIC UNIT GROUND CIRCUIT

Refer to “Ground Circuit Check”, BR-36.

Is ground circuit OK?

Yes	▶	GO TO 5.
No	▶	Repair harness or connector.

5	CHECK SOLENOID VALVE POWER SUPPLY CIRCUIT

1. Disconnect ABS actuator and electric unit connector.
2. Check voltage between ABS actuator and electric unit connector E39 terminal 9 and ground.

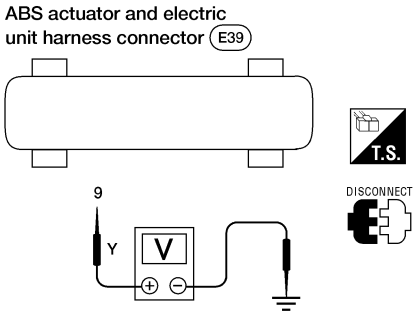

ABR887

Does battery voltage exist?

Yes	▶	Replace ABS actuator and electric unit.
No	▶	**Check the following.** If NG, repair harness or connectors. ● Harness connector E39 ● Harness for open or short between ABS actuator and electric unit and fusible link

6	REPLACE FUSIBLE LINK

Replace fusible link.

Does the fuse blow out when ignition switch is turned ON?

Yes	▶	GO TO 7.
No	▶	**INSPECTION END**

7	CHECK SOLENOID VALVE RELAY POWER SUPPLY CIRCUIT FOR SHORT

1. Disconnect battery cable and ABS actuator and electric unit connector.
2. Check continuity between ABS actuator and electric unit connector E39 terminal 9 and ground.

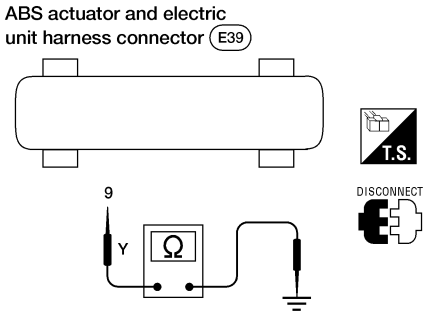

ABR888

Continuity should not exist.

Does continuity exist?

Yes	▶	**Check the following.** If NG, repair harness or connector. ● Harness connector E39 ● Harness for open or short between ABS actuator and electric unit and fusible link
No	▶	Replace ABS actuator and electric unit.

Motor Relay or Motor

DIAGNOSTIC PROCEDURE

=NGBR0106

With CONSULT-II: Malfunction code No. C1111
Without CONSULT-II: Malfunction code No. 61

1	INSPECTION START

ABS motor relay inspection

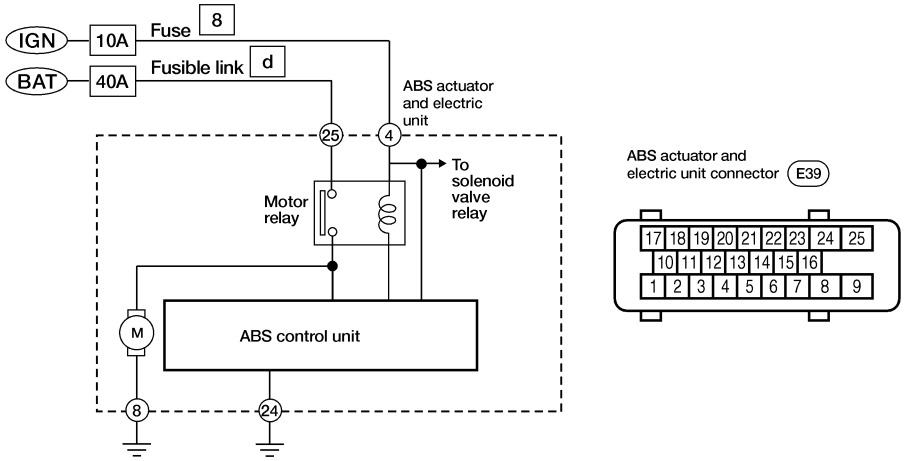

ABR889

▶	GO TO 2.

2	CHECK FUSIBLE LINK

Check 40A fusible link **d**. For fusible link layout, refer to ***EL-10***, “POWER SUPPLY ROUTING”.

Is fusible link OK?

Yes	▶	GO TO 3.
No	▶	GO TO 6.

3	CHECK CONNECTOR

1. Disconnect ABS actuator and electric unit connector. Check terminals for damage or loose connection. Then reconnect connector.
2. Carry out self-diagnosis again.

Does warning lamp activate again?

Yes	▶	GO TO 4.
No	▶	**INSPECTION END**

4	CHECK ABS ACTUATOR AND ELECTRIC UNIT GROUND CIRCUIT

Refer to “Ground Circuit Check”, BR-36.

Is ground circuit OK?

Yes	▶	GO TO 5.
No	▶	Repair harness or connector.

5	CHECK MOTOR RELAY POWER SUPPLY CIRCUIT

1. Disconnect ABS actuator and electric unit connector.
2. Check voltage between ABS actuator and electric unit connector E39 terminal 25 and ground.

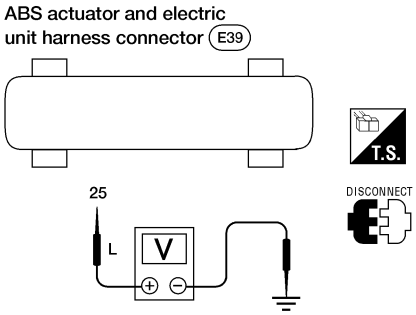

ABR890

Does battery voltage exist?

Yes	▶	Replace ABS actuator and electric unit.
No	▶	**Check the following.** If NG, repair harness or connector. ● Harness connector E39 ● Harness for open or short between ABS actuator and electric unit and fusible link

6	REPLACE FUSIBLE LINK

Replace fusible link.

Does the fusible link blow out when ignition switch is turned ON?

Yes	▶	GO TO 7.
No	▶	**INSPECTION END**

7	CHECK ABS ACTUATOR MOTOR POWER SUPPLY CIRCUIT FOR SHORT

1. Disconnect battery cable and ABS actuator and electric unit connector.
2. Check continuity between ABS actuator and electric unit connector E39 terminal 25 and ground.

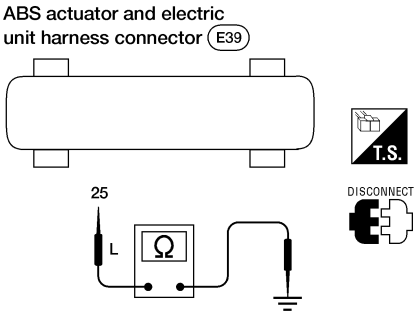

ABR891

Continuity should not exist.

Does continuity exist?

Yes	▶	**Check the following.** If NG, repair harness or connector. ● Harness connector E39 ● Harness for open or short between ABS actuator and electric unit and fusible link
No	▶	Replace ABS actuator and electric unit.

Low Voltage

DIAGNOSTIC PROCEDURE

NGBR0107

With CONSULT-II: Malfunction code No. C1109
Without CONSULT-II: Malfunction code No. 57

1	INSPECTION START
ABS actuator and electric unit power supply and ground circuit inspection	

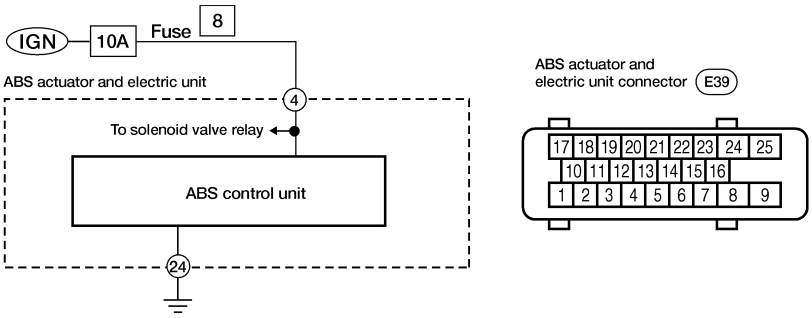

▶	GO TO 2.

2	CHECK FUSE
Check 10A fuse No. 8. For fuse layout, refer to ***EL-10***, “POWER SUPPLY ROUTING”.	
Is fuse OK?	
Yes ▶	GO TO 3.
No ▶	GO TO 6.

3	CHECK CONNECTOR
1. Disconnect ABS actuator and electric unit connector. Check terminals for damage or loose connections. Then reconnect connector. 2. Carry out self-diagnosis again.	
Does warning lamp activate again?	
Yes ▶	GO TO 4.
No ▶	**INSPECTION END**

4	CHECK ABS ACTUATOR AND ELECTRIC UNIT GROUND CIRCUIT
Refer to “Ground Circuit Check”, BR-36.	
Is ground circuit OK?	
Yes ▶	GO TO 5.
No ▶	Repair harness or connector.

5	CHECK ABS ACTUATOR AND ELECTRIC UNIT POWER SUPPLY CIRCUIT

1. Disconnect ABS actuator and electric unit connector.
2. Check voltage between ABS actuator and electric unit connector E39 terminal 4 and ground.

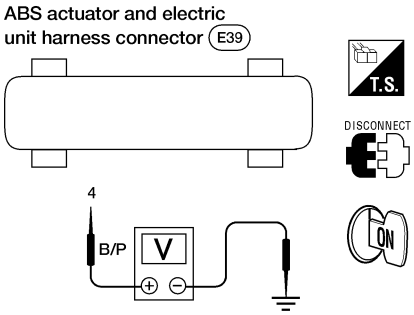

ABR893

Does battery voltage exist when ignition switch is turned ON?

Yes	▶	Replace ABS actuator and electric unit.
No	▶	**Check the following.** If NG, repair harness or connector. ● Harness connector E39 ● Harness for open or short between ABS actuator and electric unit and fuse

6	REPLACE FUSE

Replace fuse.

Does the fuse blow out when ignition switch is turned ON?

Yes	▶	GO TO 7.
No	▶	**INSPECTION END**

7	CHECK ABS ACTUATOR AND ELECTRIC UNIT POWER SUPPLY CIRCUIT FOR SHORT

1. Disconnect battery cable and ABS actuator and electric unit connector.
2. Check continuity between ABS actuator and electric unit connector E39 terminal 4 and ground.

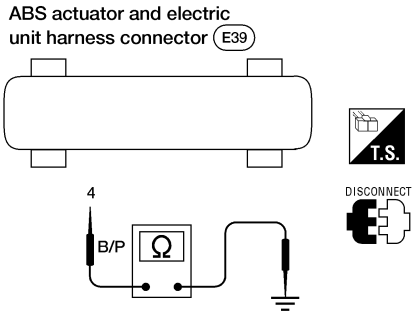

ABR894

Continuity should not exist.

Does continuity exist?

Yes	▶	**Check the following.** If NG, repair harness or connector. ● Harness connector E39 ● Harness for open or short between ABS actuator and electric unit and fuse
No	▶	Replace ABS actuator and electric unit.

G Sensor and Circuit

DIAGNOSTIC PROCEDURE

NGBR0118

With CONSULT-II: Malfunction code No. C1113
Without CONSULT-II: Malfunction code No. 17

1	INSPECTION START

G sensor inspection

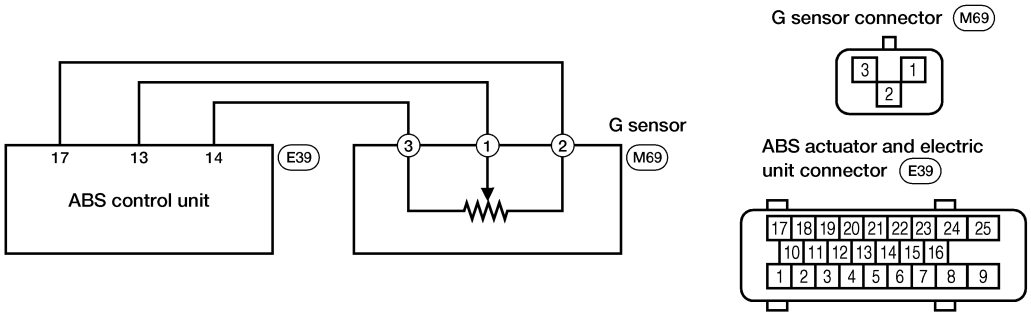

ABR895

▶	GO TO 2.

2	CHECK G SENSOR POWER

1. Turn ignition switch OFF and disconnect G sensor harness connector.
2. Turn ignition switch ON.
3. Check voltage between G sensor harness connector M69 terminal 3 (B/P) and ground.

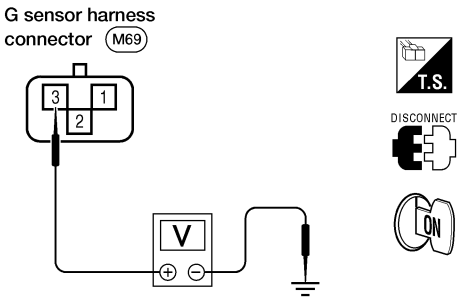

ABR896

Does approx. 5V exist?

Yes	▶	GO TO 3.
No	▶	GO TO 4.

3	CHECK G SENSOR

1. Turn ignition switch OFF.
2. Remove G sensor from bracket.
3. Reconnect harness connector to G sensor and hold sensor in same attitude/position as when installed in vehicle.
- Check voltage between G sensor connector M69 terminal 1 (G/OR) and ground for the following tests.

There should be approx. 2.5V.

4. Turn sensor 90° with connector point up.
- There should be approx. 3.7V.

5. Turn sensor 180° with connector pointing down.
- There should be approx. 1.3V.

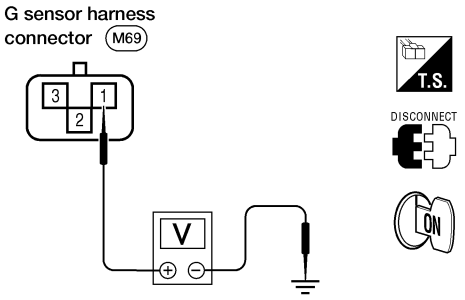

ABR897

Were the voltage readings correct for steps 3, 4 and 5?

Yes	▶	GO TO 4.
No	▶	Replace G Sensor.

4	CHECK G SENSOR CIRCUIT

1. Disconnect ABS actuator and electric unit connector.
2. Check continuity from G sensor connector M69 terminal 3 (B/P) to ABS actuator and electric unit connector E39 terminal 14 (B/P).
3. Check continuity from G sensor connector M69 terminal 1 (G/OR) to ABS actuator and electric unit connector E39 terminal 13 (G/OR).
4. Check continuity from G sensor connector M69 terminal 2 (G/B) to ABS actuator and electric unit connector E39 terminal 17 (G/B).

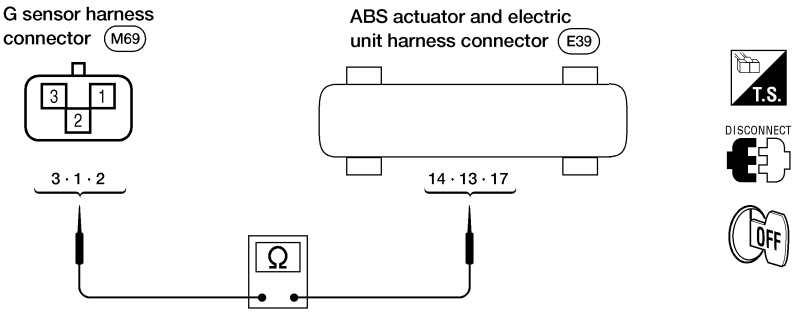

ABR898

Does continuity exist?

Yes	▶	Replace ABS actuator and electric unit.
No	▶	Repair harness or connector.

Control Unit

DIAGNOSTIC PROCEDURE

=NGBR0108

With CONSULT-II: Malfunction code No. C1110
Without CONSULT-II: Malfunction code No. 71

1	INSPECTION START
ABS actuator and electric unit power supply and ground circuit inspection	

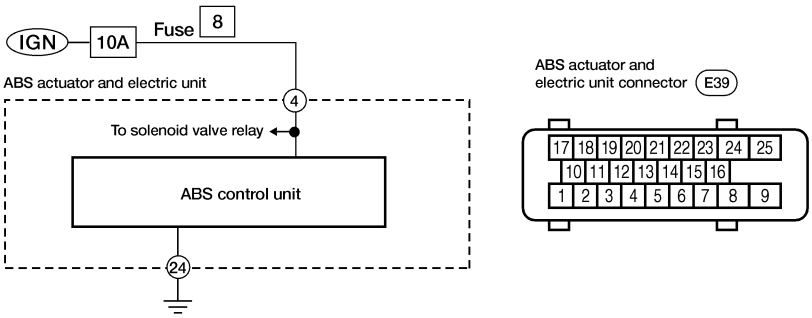

▶	GO TO 2.

2	CHECK CONNECTOR
1. Disconnect ABS actuator and electric unit connector. Check terminals for damage or loose connection. Then reconnect connector. 2. Carry out self-diagnosis again.	
Does warning lamp activate again?	
Yes ▶	GO TO 3.
No ▶	**INSPECTION END**

3	CHECK ABS ACTUATOR AND ELECTRIC UNIT POWER SUPPLY CIRCUIT
Check voltage. Refer to Test No. 4 in “DIAGNOSTIC PROCEDURE”, BR-62.	
Does battery voltage exist when ignition switch is turned ON?	
Yes ▶	GO TO 4.
No ▶	Repair.

4	CHECK WARNING LAMP INDICATION
Does warning lamp indicate code No. 71 again?	
Yes or No	
Yes ▶	Replace ABS actuator and electric unit.
No ▶	Inspect the system according to the code No.

1. ABS Works Frequently

NGBR0109

1	CHECK BRAKE FLUID PRESSURE	
Check brake fluid pressure distribution.		
Is brake fluid pressure distribution normal?		
Yes	▶	GO TO 2.
No	▶	Repair. Then perform Preliminary Check. Refer to BR-33.

2	CHECK WHEEL SENSOR	
1. Check wheel sensor connector for terminal damage or loose connections. 2. Perform wheel sensor mechanical check. Refer to Test No. 7 in “DIAGNOSTIC PROCEDURE”, BR-57.		
Is wheel sensor mechanism OK?		
Yes	▶	GO TO 3.
No	▶	Repair.

3	CHECK FRONT AXLE	
Check front axles for excessive looseness. Refer to ***AX-5*** , “Front Wheel Bearing”.		
Is front axle installed properly?		
Yes	▶	Go to Test No. 3 in “2. Unexpected Pedal Action”, BR-68.
No	▶	Repair.

2. Unexpected Pedal Action

NGBR0110

1	CHECK BRAKE PEDAL STROKE	
Check brake pedal stroke.		
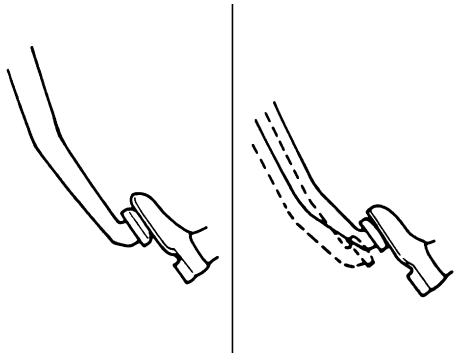 SBR540A		
Is brake pedal stroke excessively large?		
Yes	▶	Perform “Preliminary Check”. Refer to BR-33.
No	▶	GO TO 2.

2	CHECK MECHANICAL BRAKE SYSTEM PERFORMANCE	
Disconnect ABS actuator and electric unit connector and check whether brake is effective. **Does brake system function properly when brake pedal is depressed?**		
Yes	▶	GO TO 3.
No	▶	Perform "Preliminary Check". Refer to BR-33.

3	CHECK WARNING LAMP INDICATION	
Ensure warning lamp remains off while driving. 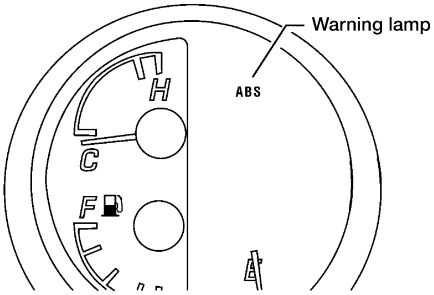 LBR380 **Is warning lamp turned off?**		
Yes	▶	GO TO 4.
No	▶	Carry out self-diagnosis. Refer to BR-46.

4	CHECK WHEEL SENSOR	
1. Check wheel sensor connector for terminal damage or loose connection. 2. Perform wheel sensor mechanical check. Refer to Test No. 7 in "DIAGNOSTIC PROCEDURE", BR-57. **Is wheel sensor mechanism OK?**		
Yes	▶	Check ABS actuator and electric unit pin terminals for damage or the connection of ABS actuator and electric unit harness connector. Reconnect ABS actuator and electric unit harness connector. Then retest.
No	▶	Repair.

3. Long Stopping Distance

=NGBR0111

1	CHECK MECHANICAL BRAKE SYSTEM PERFORMANCE	
Disconnect ABS actuator and electric unit connector and check whether stopping distance is still long. **Does brake system function properly when brake pedal is depressed?**		
Yes	▶	Perform Preliminary Check and air bleeding (if necessary).
No	▶	Go to Test No. 3 in “2. Unexpected Pedal Action”, BR-68.

NOTE:
Stopping distance may be longer for vehicles without ABS when road condition is slippery.

4. ABS Does Not Work

NGBR0112

1	CHECK WARNING LAMP INDICATION	
Does the ABS warning lamp activate? **Yes or No**		
Yes	▶	Carry out self-diagnosis. Refer to BR-46.
No	▶	Go to Test No. 3 in “2. Unexpected Pedal Action”, BR-68.

NOTE:
ABS does not work when vehicle speed is under 10 km/h (6 MPH).

5. Pedal Vibration and Noise

NGBR0113

1	INSPECTION START
Pedal vibration and noise inspection Brake pedal  SAT797A **NOTE:** ABS may operate and cause vibration under any of the following conditions. ● Applying brake gradually when shifting or operating clutch. ● Low friction (slippery) road. ● High speed cornering. ● Driving over bumps and pot holes. ● Engine speed is over 5,000 rpm with vehicle stopped.	
▶	GO TO 2.

2	CHECK SYMPTOM	
1. Apply brake. 2. Start engine. **Does the symptom appear only when engine is started?**		
Yes	▶	Carry out self-diagnosis. Refer to BR-46.
No	▶	Go to Test No. 3 in "2. Unexpected Pedal Action", BR-68.

6. Warning Lamp Does Not Come On When Ignition Switch Is Turned On

NGBR0114

1	INSPECTION START	
Warning lamp circuit inspection		
	▶	GO TO 2.

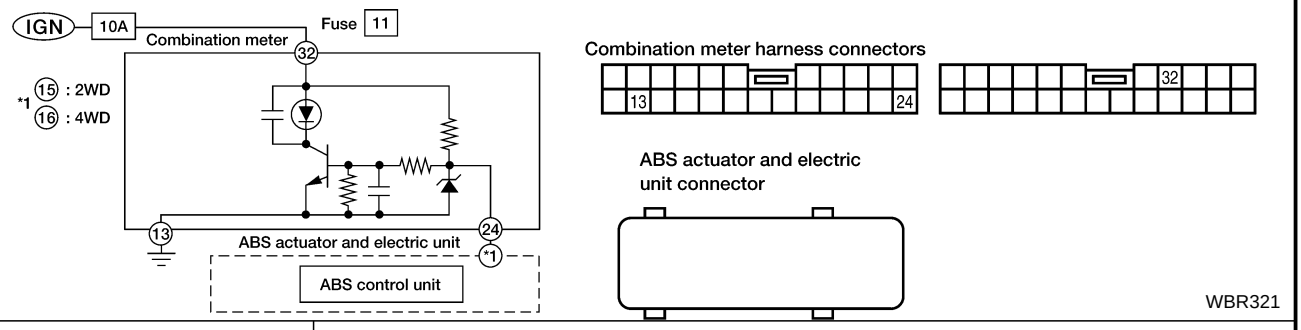

2	CHECK FUSE	
Check 10A fuse No. 11. For fuse layout, refer to ***EL-10***, "POWER SUPPLY ROUTING". **Is fuse OK?**		
Yes	▶	GO TO 3.
No	▶	Replace fuse.

3	CHECK WARNING LAMP ACTIVATE	
Disconnect ABS actuator and electric unit connector.		
Does the warning lamp activate?		
Yes	▶	Replace ABS actuator and electric unit.
No	▶	GO TO 4.

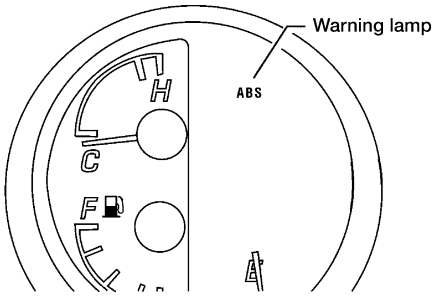

4	CHECK HARNESS FOR SHORT

1. Disconnect ABS actuator and electric unit connector E39 and combination meter connector M38.
2. Check continuity between ABS actuator and electric unit connector E39 (body side) terminal 15 (L/W) (2WD) or terminal 16 (L/W) (4WD) and ground.

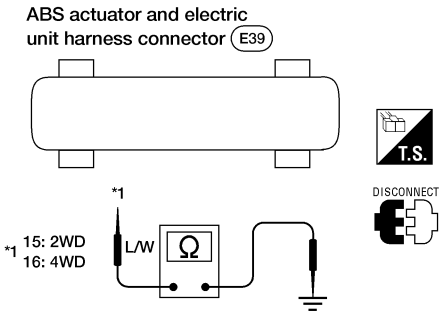

ABR901

Continuity should not exist.

Does continuity exist?

Yes	▶	Repair harness or connectors.
No	▶	**Check combination meter.** Refer to ***EL-94***, "WARNING LAMPS".

7. Warning Lamp Stays On When Ignition Switch Is Turned On

NGBR0115

1	INSPECTION START

ABS control unit inspection

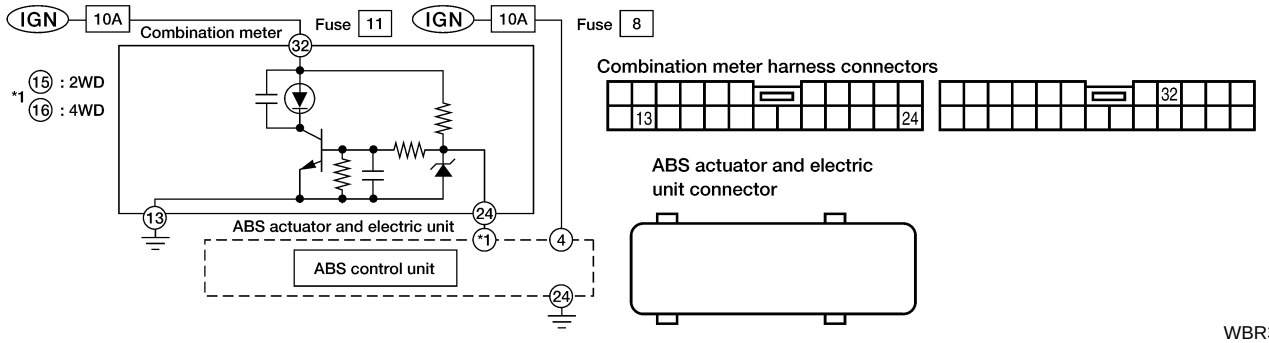

WBR322

	▶	GO TO 2.

2	CHECK FUSE

Check 10A fuse No. 8. For fuse layout, refer to ***EL-10***, "POWER SUPPLY ROUTING".

Is fuse OK?

Yes	▶	GO TO 3.
No	▶	GO TO 8.

3	CHECK HARNESS CONNECTOR	
Check ABS actuator and electric unit pin terminals for damage or bad connection of ABS actuator and electric unit harness connector. Reconnect ABS actuator and electric unit harness connector. Then retest.		
Does warning lamp stay on when ignition switch is turned ON?		
Yes	▶	GO TO 4.
No	▶	**INSPECTION END**

4	CHECK ABS ACTUATOR AND ELECTRIC UNIT GROUND CIRCUIT	
Refer to "Ground Circuit Check", BR-36.		
Is ground circuit OK?		
Yes	▶	GO TO 5.
No	▶	Repair harness or connector.

5	CHECK ABS ACTUATOR AND ELECTRIC UNIT POWER SUPPLY CIRCUIT	
1. Disconnect ABS actuator and electric unit connector. 2. Check voltage between ABS actuator and electric unit connector E39 terminal 4 and ground.		
Does battery voltage exist when ignition switch is turned ON?		
Yes	▶	GO TO 6.
No	▶	**Check the following.** If NG, repair harness or connector. ● Harness connector E39 ● Harness for open or short between ABS actuator and electric unit and fuse

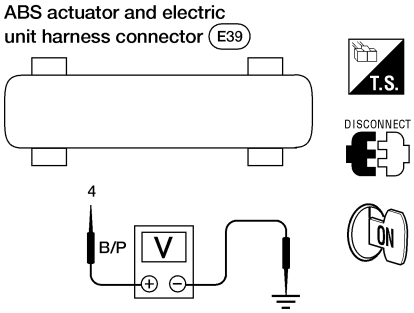

ABR893

6	CHECK WARNING LAMP

1. Disconnect ABS actuator and electric unit connector.
2. Connect suitable wire between ABS actuator and electric unit connector E39 terminal 15 (2WD) terminal 16 (4WD) and ground.

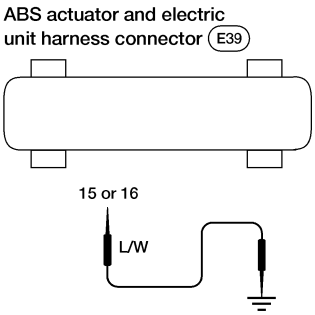

ABR903

Does the warning lamp deactivate?

Yes	▶	Replace ABS actuator and electric unit.
No	▶	GO TO 7.

7	CHECK ABS WARNING LAMP CONTROL CIRCUIT FOR OPEN

1. Disconnect combination meter connector M38.
2. Check continuity between combination meter connector M38 (body side) terminal 24 (L/W) and ABS actuator and electric unit connector E39 (body side) terminal 15 (L/W) (2WD) or terminal 16 (L/W) (4WD).
   NOTE:
   Connect positive lead of multimeter to combination meter connector M38 (body side) terminal 24 (L/W) and negative lead to ABS actuator and electric unit connector E39 (body side) terminal 15 (L/W) (2WD) or terminal 16 (L/W) (4WD).

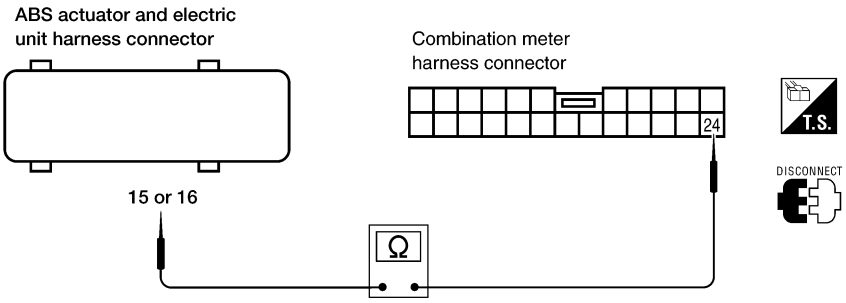

WBR323

Continuity should exist.

Does continuity exist?

Yes	▶	**Check combination meter.** Refer to ***EL-94***, "WARNING LAMPS".
No	▶	Repair harness or connectors.

8	REPLACE FUSE

Replace fuse.

Does the fuse blow out when ignition switch is turned ON?

Yes	▶	GO TO 9.
No	▶	**INSPECTION END**

9	CHECK ABS ACTUATOR AND ELECTRIC UNIT POWER SUPPLY CIRCUIT FOR SHORT

1. Disconnect battery cable and ABS actuator and electric unit connector.
2. Check continuity between ABS actuator and electric unit connector E39 (body side) terminal 4 and ground.

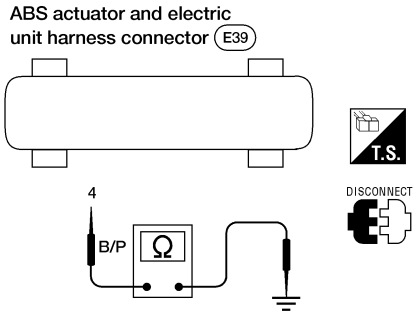

ABR894

Continuity should not exist.

Does continuity exist?

Yes	▶	**Check the following.** If NG, repair harness or connector. ● Harness connector E39 ● Harness for open or short between ABS actuator and electric unit and fuse
No	▶	Replace ABS actuator and electric unit.

REMOVAL AND INSTALLATION

CAUTION:
Be careful not to damage sensor edge and sensor rotor teeth. When removing the front or rear wheel hub assembly, disconnect the ABS wheel sensor from the assembly and move it away.

Front Wheel Sensor

NGBR0079S01

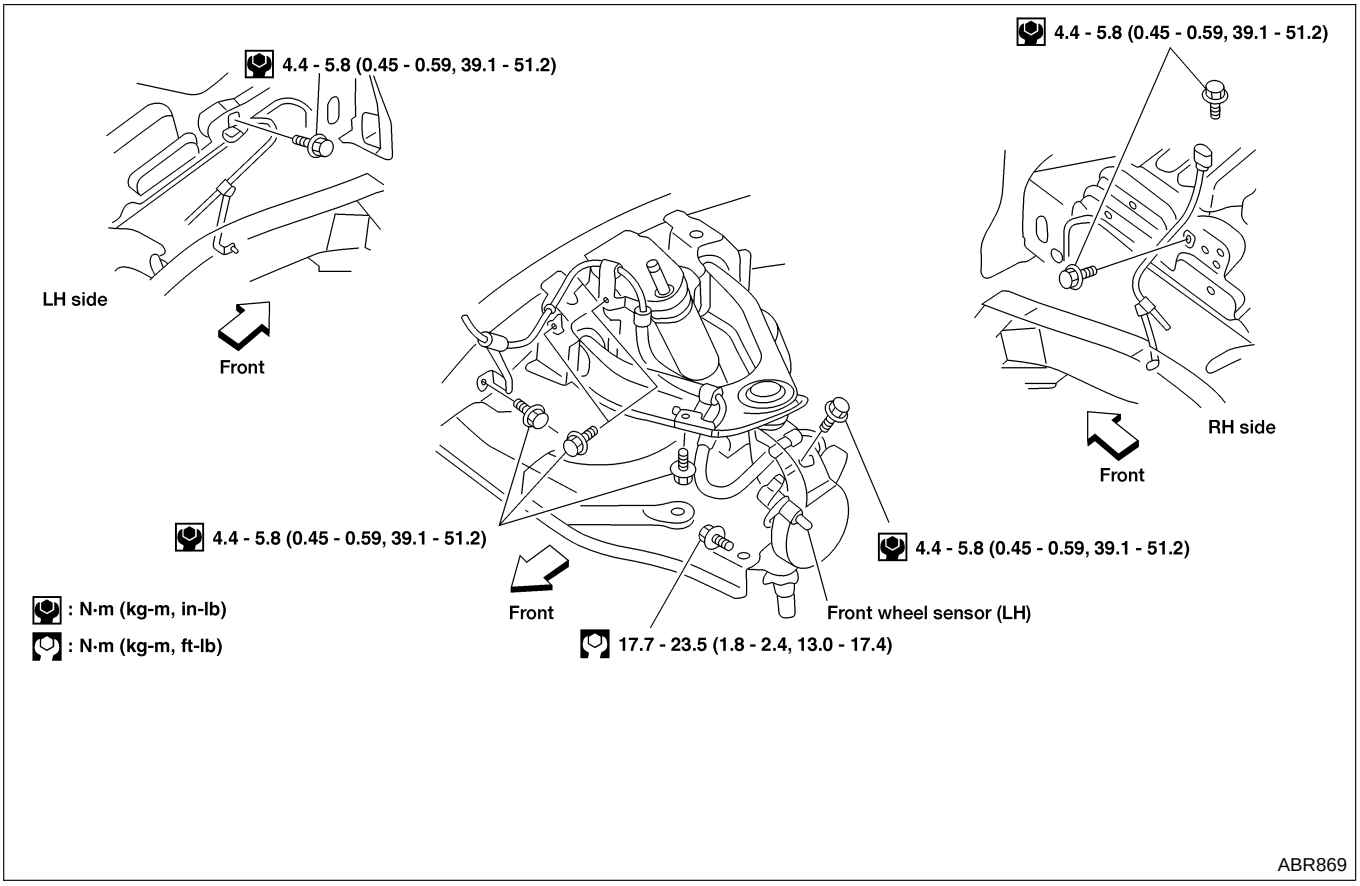

Rear Wheel Sensor

NGBR0079S02

4WD MODELS

NGBR0079S0201

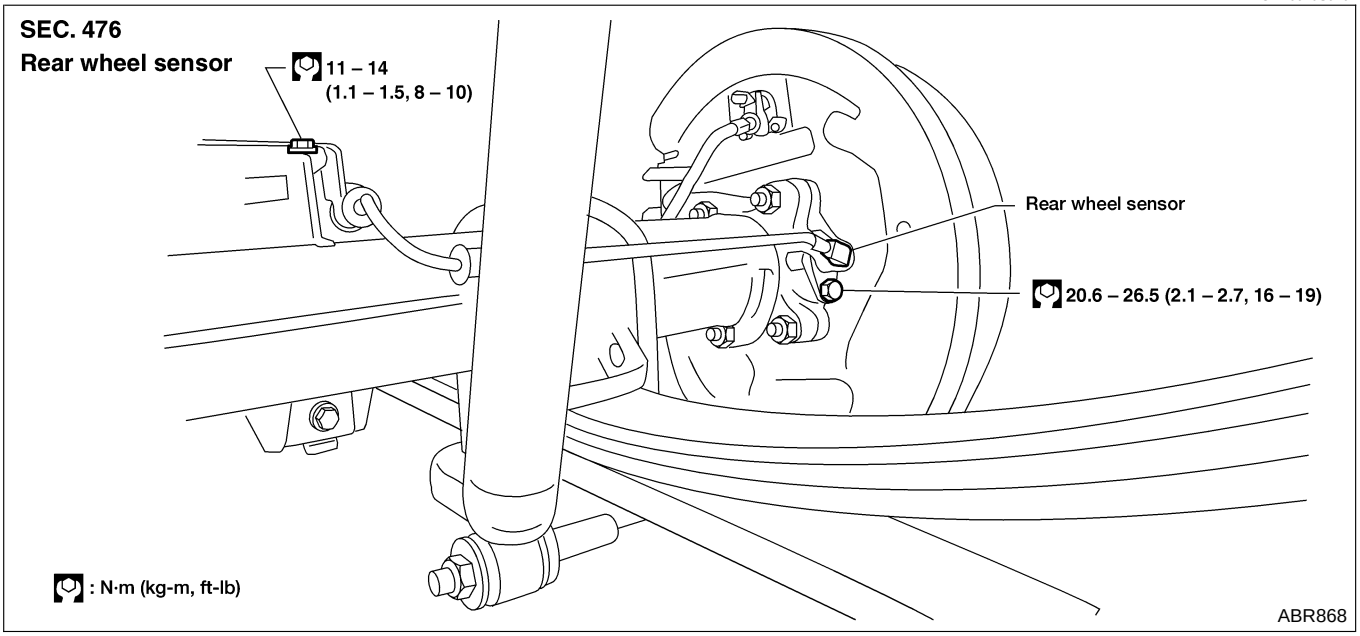

2WD MODELS

=NGBR0079S0202

CAUTION:

Be careful not to damage sensor edge and sensor rotor teeth. In case the final drive assembly needs to be removed, disconnect the ABS sensor from the final drive assembly and move it away. Failure to do so may result in damage to the sensor wires making the sensor inoperative.
For final drive models using collapsible spacer (C200), bearing preload must be adjusted whenever companion flange is removed. Therefore, final drive overhaul is required.

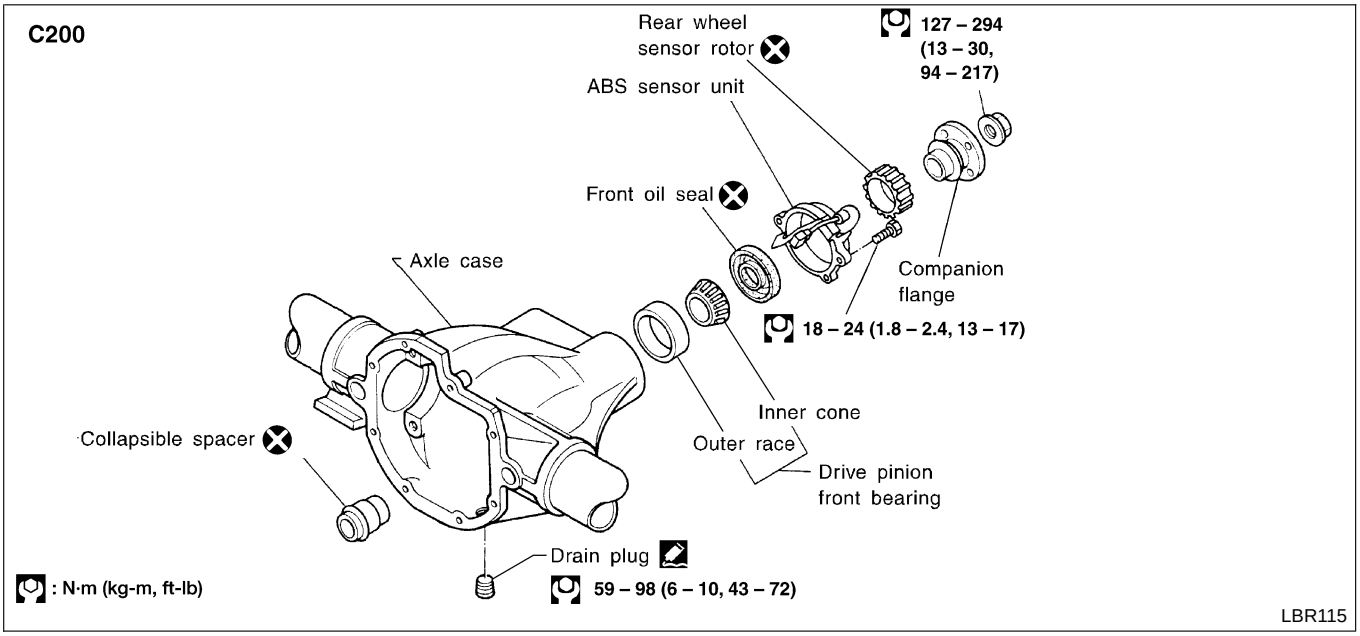

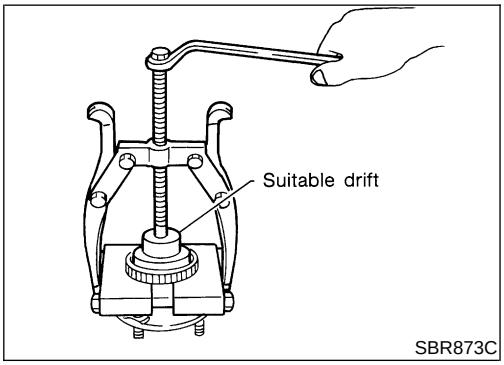

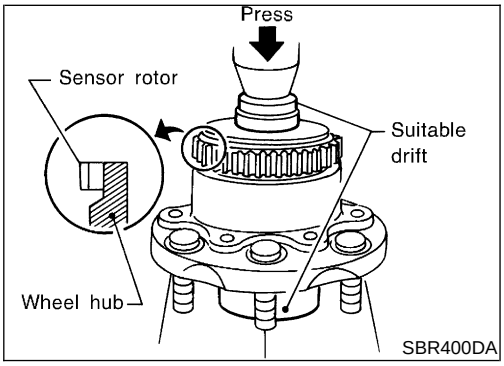

Front Sensor Rotor

NGBR0079S03

REMOVAL

NGBR0079S0301

1. Remove the front wheel hub. Refer to ***AX-5***, "FRONT AXLE".
2. Remove the sensor rotor using suitable puller, drift and bearing replacer.

INSTALLATION

NGBR0079S0302

Install the sensor rotor using suitable drift and press.

- Always replace sensor rotor with new one.
- Pay attention to the direction of front sensor rotor as shown in figure.

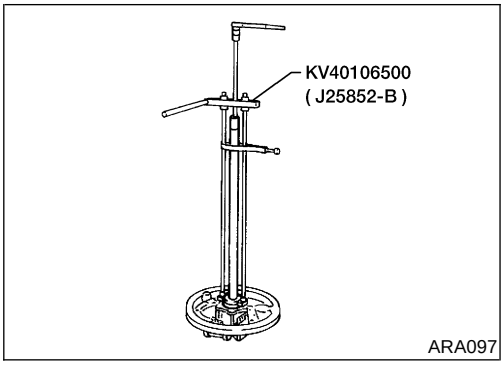

Rear Sensor Rotor (4WD)

NGBR0079S04

REMOVAL

NGBR0079S0401

- Remove the sensor rotor using Tool.

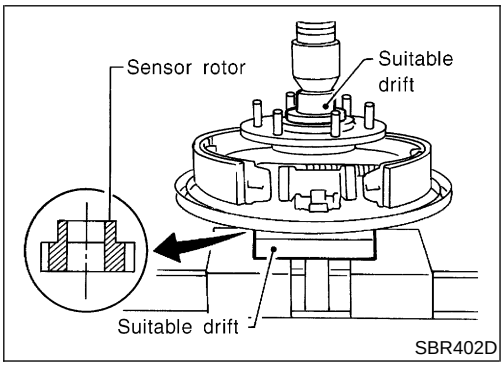

INSTALLATION

NGBR0079S0402

Install the sensor rotor using suitable drift and press.

- Always replace sensor rotor with new one.
- Pay attention to the direction of front sensor rotor as shown in figure.

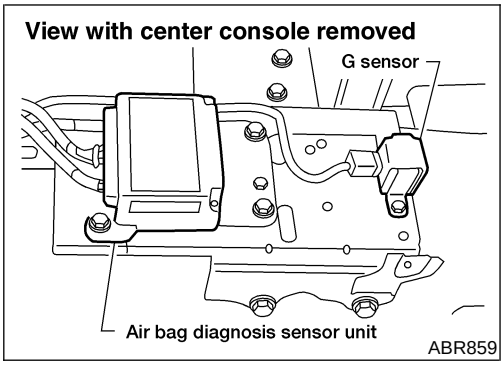

G Sensor

NGBR0079S06

Always replace G sensor if bumped or dropped. Otherwise, performance characteristics of G sensor will be changed, which in turn changes ABS control performance characteristics.

ABS Actuator and Electric Unit

=NGBR0079S07

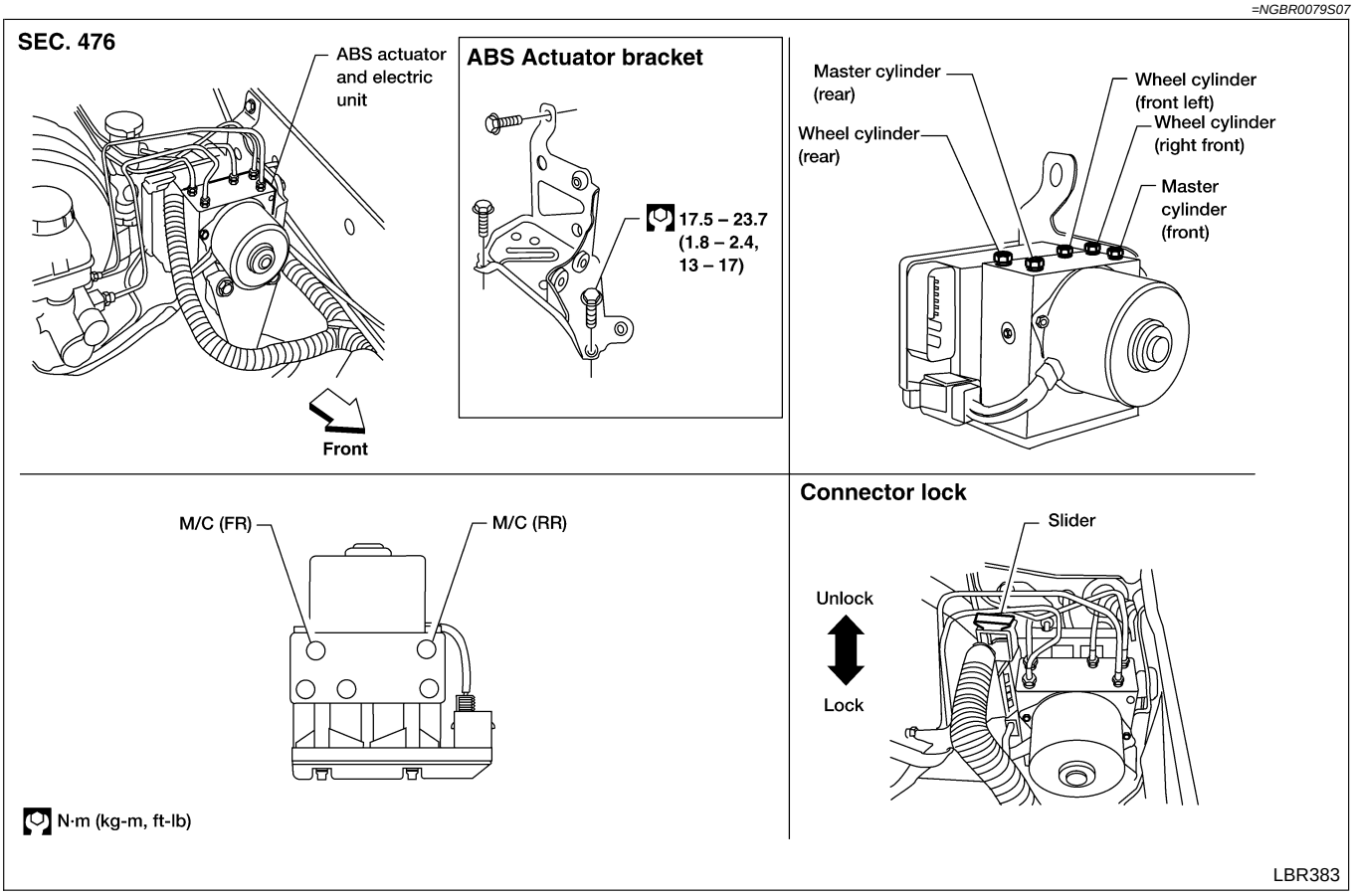

REMOVAL

NGBR0079S0701

1. Disconnect battery cable.
2. Drain brake fluid. Refer to “Changing Brake Fluid”, BR-6.
3. Remove mounting bracket fixing bolts and nuts.
4. Disconnect connector, brake pipes and remove fixing nuts and actuator ground cable.

INSTALLATION

NGBR0079S0702

CAUTION:

After installation, refill brake fluid. Then bleed air. Refer to “Bleeding Brake System”, BR-8.

1. Tighten actuator ground cable.

Place ground cable at a notch of mounting bracket.

2. Connect brake pipes temporarily.
3. Tighten fixing bolts and nuts.
4. Tighten brake pipes.
5. Connect connector and battery cable.

General Specifications

NGBR0080
Unit: mm (in)

Applied model		KA24DE	VG33E and VG33ER
Front brake	Brake model	CL33VD	
	Cylinder bore diameter × number of pistons	46.4 (1.827) × 2	
	Pad Length × width × thickness	132.0 × 52.5 × 11 (5.20 × 2.067 × 0.43)	
	Rotor outer diameter × thickness	283 x 28(11.14 × 1.10)	
Rear brake	Brake model	LT30	
	Cylinder bore diameter	22.23 (7/8)	
	Lining length × width × thickness	296 × 50[1], 40[2] × 5.8 (11.65 × 1.97[1], 1.57[2] × 0.228)	
	Drum inner diameter	295.0 (11.61)	
Master cylinder	Bore diameter	25.40 (1)	
Control valve	Valve model	Proportioning valve within master cylinder	
	Split point kPa (kg/cm^2, psi) × reducing ratio	2,942 (30, 427) × 0.2	
Brake booster	Booster model	M215T	
	Diaphragm diameter	Pri: 230 (9.06) Sec: 205 (8.07)[1] Sec: 230 (9.06)[2]	Pri: 230 (9.06) Sec: 230 (9.06)
Recommended brake fluid		DOT 3	

1. Early production
2. Late production

Disc Brake

NGBR0081
Unit: mm (in)

Brake model		CL33VD
Pad wear limit	Minimum thickness	2.0 (0.079)
Rotor repair limit	Minimum thickness	26.0 (1.024)

Drum Brake

NGBR0082
Unit: mm (in)

Brake model		LT30
Lining wear limit	Minimum thickness	1.5 (0.059)
Drum repair limit	Maximum inner diameter	296.5 (11.67)
	Out-of-round limit	0.03 (0.0012)

Brake Pedal

NGBR0083
Unit: mm (in)

Transmission		M/T	A/T
Free height “H”*		191 - 201 (7.52 - 7.91)	201 - 211 (7.91 - 8.31)
Depressed height “D” [under force of 490 N (50 kg, 110 lb) with engine running]		100 (3.94)	110 (4.33)
Clearance “C” between pedal stopper and threaded end of stop lamp switch or ASCD switch		0.3 - 1.0 (0.012 - 0.039)	
Pedal free play	At pedal pad	1 - 3 (0.04 - 0.12)	

*: Measured from surface of dash lower panel to pedal pad

Parking Brake Control

NGBR0084

Unit: notch

Control Type	Pedal
Pedal stroke [under force of 196 N (20 kg, 44 lb)]	5 - 6
Pedal stroke when warning switch comes on	1