SECTION DEF
DEFOGGER

A B C D E F G H I J K DEF M N O P

CONTENTS

BASIC INSPECTION 3

DIAGNOSIS AND REPAIR WORKFLOW 3
Repair Work Flow 3

SYSTEM DESCRIPTION 4

MANUAL A/C IDENTIFICATION TABLE 4
Application Table 4

REAR WINDOW DEFOGGER SYSTEM 5
System Diagram 5
System Description 5
Component Parts Location 6
Component Description 6

DIAGNOSIS SYSTEM (BCM) 7

COMMON ITEM 7
COMMON ITEM : CONSULT Function (BCM - COMMON ITEM) 7

REAR DEFOGGER 7
REAR DEFOGGER : CONSULT Function (BCM - REAR DEFOGGER) 8

DTC/CIRCUIT DIAGNOSIS 9

MANUAL A/C IDENTIFICATION TABLE 9
Application Table 9

REAR WINDOW DEFOGGER SWITCH 10
Description 10
Component Function Check 10
Diagnosis Procedure Front Air Control (Type 1) 10
Diagnosis Procedure Front Air Control (Type 2) 10

REAR WINDOW DEFOGGER RELAY 12
Description 12
Component Function Check 12
Diagnosis Procedure 12

REAR WINDOW DEFOGGER POWER SUPPLY AND GROUND CIRCUIT 13
Description 13
Component Function Check 13
Diagnosis Procedure 13
Component Inspection 14

DOOR MIRROR DEFOGGER LH 15
Description 15
Component Function Check 15
Diagnosis Procedure 15
Component Inspection 17

DOOR MIRROR DEFOGGER RH 18
Description 18
Component Function Check 18
Diagnosis Procedure 18
Component Inspection 20

ECU DIAGNOSIS INFORMATION 21

BCM (BODY CONTROL MODULE) 21
Reference Value 21
Terminal Layout 24
Physical Values 24

WIRING DIAGRAM 30

REAR WINDOW DEFOGGER 30
Wiring Diagram 30

SYMPTOM DIAGNOSIS 38

REAR WINDOW DEFOGGER AND DOOR MIRROR DEFOGGER DO NOT OPERATE. 38
Diagnosis Procedure 38

REAR WINDOW DEFOGGER DOES NOT OPERATE BUT BOTH OF DOOR MIRROR DEFOGGER OPERATE. 39
Diagnosis Procedure 39

BOTH DOORS MIRROR DEFOGGER DON'T OPERATE BUT REAR WINDOW DEFOGGER OPERATES **40**
Diagnosis Procedure 40

DRIVER SIDE DOOR MIRROR DEFOGGER DOES NOT OPERATE. **41**
Diagnosis Procedure 41

PASSENGER SIDE DOOR MIRROR DEFOGGER DOES NOT OPERATE. **42**
Diagnosis Procedure 42

REAR WINDOW DEFOGGER SWITCH DOES NOT LIGHT, BUT REAR WINDOW DEFOGGER OPERATES **43**
Diagnosis Procedure 43

PRECAUTION **44**

PRECAUTIONS **44**
Precaution for Supplemental Restraint System (SRS) "AIR BAG" and "SEAT BELT PRE-TENSIONER" 44
Handling for Adhesive and Primer 44

REMOVAL AND INSTALLATION **45**

REAR WINDOW DEFOGGER **45**
Filament Check 45
Filament Repair 45

BASIC INSPECTION

DIAGNOSIS AND REPAIR WORKFLOW

Repair Work Flow

INFOID:0000000008799661

DETAILED FLOW

1. LISTEN TO CUSTOMER COMPLAINT

Listen to customer complaint. Get detailed information about the conditions and environment when the symptom occurs.

>> GO TO 2

2. VERIFY THE SYMPTOM WITH OPERATIONAL CHECK

Verify the symptom with operational check.

>> GO TO 3

3. GO TO APPROPRIATE TROUBLE DIAGNOSIS

Go to appropriate trouble diagnosis.

>> GO TO 4

4. REPAIR OR REPLACE

Repair or replace the specific parts.

>> GO TO 5

5. FINAL CHECK

Final check.

Is inspection result normal?

YES >> Inspection End
NO >> Check for intermittent incident. Refer to GI-40, "Intermittent Incident".

SYSTEM DESCRIPTION

MANUAL A/C IDENTIFICATION TABLE

Application Table

INFOID:0000000008799662

Manual A/C Type	Description	Visual Identification
Manual A/C (Type 1)	Two Control Dial System [with variable blower control (VBC)]	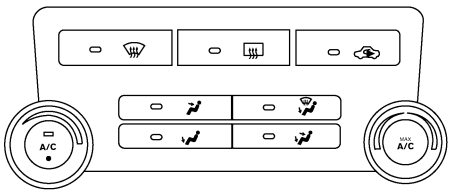 AWIIA0481ZZ
Manual A/C (Type 2)	Three Control Dial System [without variable blower control (VBC)]	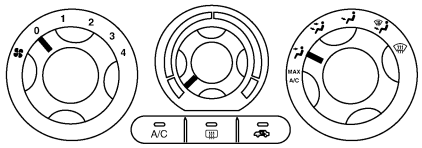 AWIIA1228ZZ

REAR WINDOW DEFOGGER SYSTEM

System Diagram

INFOID:0000000008799663

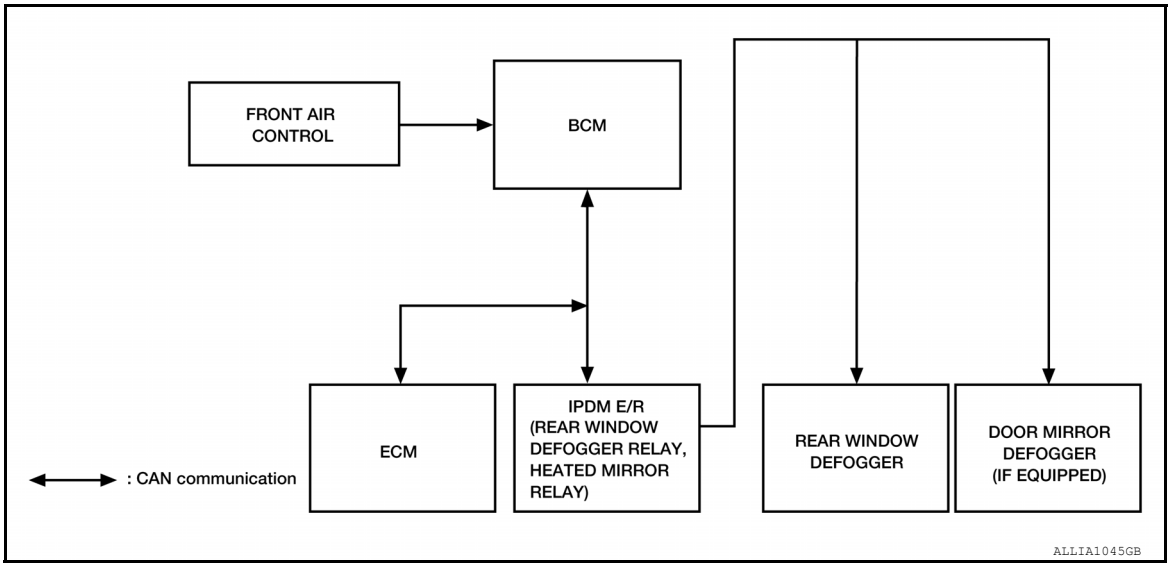

System Description

INFOID:0000000008799664

Operation Description

- When rear window defogger switch is turned ON while ignition switch is ON, the front air control transmits rear window defogger switch signal to BCM.
- BCM transmits rear window defogger control signal to IPDM E/R via CAN communication when rear window defogger operates.
- IPDM E/R turns rear window defogger relay and heated mirror relay (if equipped) ON when rear window defogger switch signal is received.
- Rear window defogger and door mirror defogger (if equipped) are supplied with power and operate when rear window defogger relay and heated mirror relay (if equipped) turn ON.
- Rear window defogger ON is displayed when signal is received.

Timer Function

- BCM turns rear window defogger relay and heated mirror relay (if equipped) ON for approximately 15 minutes when rear window defogger switch is turned ON while ignition switch is ON. It makes rear window defogger and door mirror defogger (if equipped) operate.
- Timer is canceled after pressing rear window defogger switch again during timer operation. Then BCM turns rear window defogger relay and heated mirror relay (if equipped) OFF. The same reaction also occurs during timer operation, if the ignition switch is turned OFF.

INPUT/OUTPUT SIGNAL CHART

Switch	Input signal to BCM	BCM function	Actuator
Rear window defogger switch	Defogger switch signal	Rear window defogger & door mirror defogger (if equipped) control	Rear window defogger Door mirror defogger (if equipped)
Ignition switch	Ignition signal		

Component Parts Location

INFOID:0000000008799665

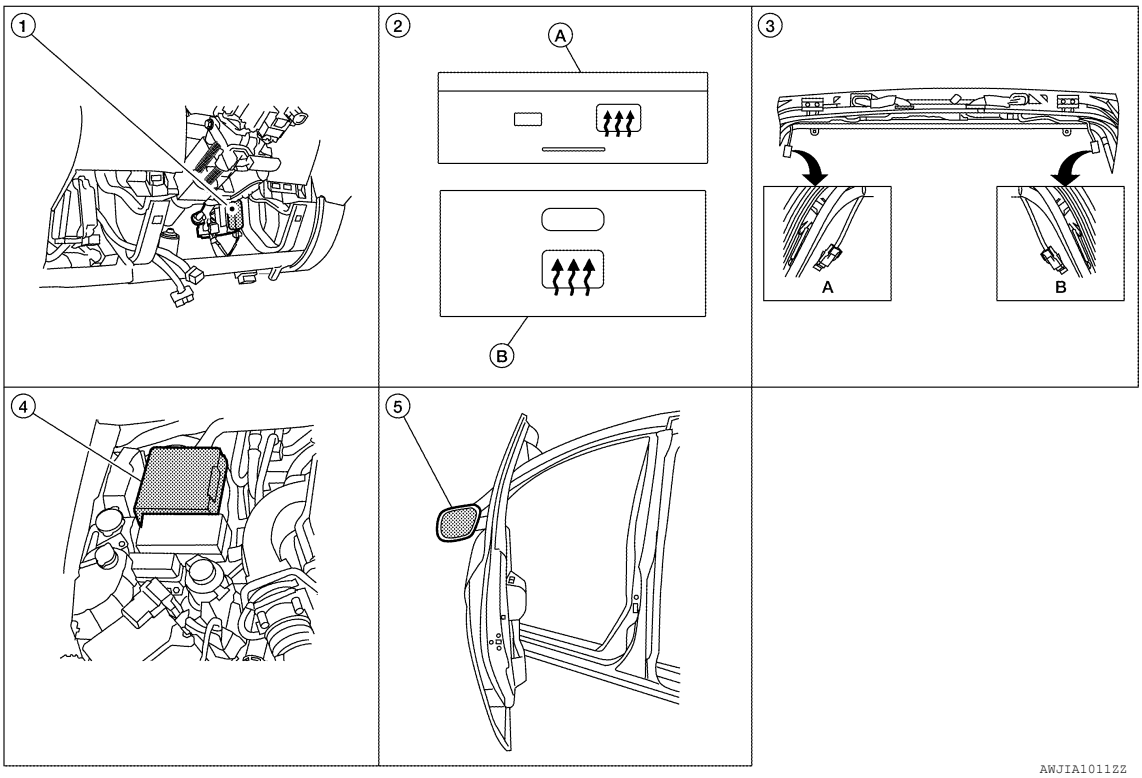

1. BCM M18, M19, M20 (view with lower instrument panel LH removed)
2. A. Rear window defogger switch (with type 1)
   B. Rear window defogger swicth (with type 2)
3. A. Rear window defogger ground connector D604
   B. Rear window defogger connector D651
4. IPDM E/R (rear window defogger relay, heated mirror relay if equipped) E120, E122, E124
5. Door mirror (door mirror defogger) LH D4, RH D107 (if equipped)

Component Description

INFOID:0000000008799666

BCM	• Operates the rear window defogger with the operation of rear window defogger switch. • Performs the timer control of rear window defogger.
Rear window defogger relay	• Operates the rear window defogger with the control signal from BCM.
Rear window defogger switch	• The rear window defogger switch is turned ON. • Turns the indicator lamp ON when detecting the operation of rear window defogger.
Rear window defogger	• Heats the heating wire with the power supply from the rear window defogger relay to prevent the rear window from fogging up.
Heated mirror relay*	Operates the door mirror defogger with the control signal from IPDM E/R. Controlled simultaneously with the rear window defogger relay.
Door mirror defogger*	The heating elements heat up when powered by the heated mirror relay to defog the door mirrors or prevent the door mirrors from fogging up.

*:if equipped

DIAGNOSIS SYSTEM (BCM)

COMMON ITEM

COMMON ITEM : CONSULT Function (BCM - COMMON ITEM)

INFOID:0000000009287287

APPLICATION ITEM

CONSULT performs the following functions via CAN communication with BCM.

Direct Diagnostic Mode	Description
ECU Identification	The BCM part number is displayed.
Self Diagnostic Result	The BCM self diagnostic results are displayed.
Data Monitor	The BCM input/output data is displayed in real time.
Active Test	The BCM activates outputs to test components.
Work support	The settings for BCM functions can be changed.
Configuration	• The vehicle specification can be read and saved. • The vehicle specification can be written when replacing BCM.
CAN Diag Support Mntr	The result of transmit/receive diagnosis of CAN communication is displayed.

SYSTEM APPLICATION

BCM can perform the following functions.

System	Sub System	Direct Diagnostic Mode						
		ECU Identification	Self Diagnostic Result	Data Monitor	Active Test	Work support	Configuration	CAN Diag Support Mntr
Door lock	DOOR LOCK			×	×	×		
Rear window defogger	REAR DEFOGGER			×	×			
Warning chime	BUZZER			×	×			
Interior room lamp timer	INT LAMP			×	×	×		
Remote keyless entry system	MULTI REMOTE ENT			×	×	×		
Exterior lamp	HEAD LAMP			×	×	×		
Wiper and washer	WIPER			×	×	×		
Turn signal and hazard warning lamps	FLASHER			×	×			
Air conditioner	AIR CONDITIONER			×				
Combination switch	COMB SW			×				
BCM	BCM	×	×			×	×	×
Immobilizer	IMMU		×	×	×			
Interior room lamp battery saver	BATTERY SAVER			×	×	×		
Back door open	TRUNK			×	×			
Vehicle security system	THEFT ALM			×	×	×		
RAP system	RETAINED PWR			×	×	×		
Signal buffer system	SIGNAL BUFFER			×	×			
TPMS	AIR PRESSURE MONITOR		×	×	×	×		
Panic alarm system	PANIC ALARM				×			

REAR DEFOGGER

REAR DEFOGGER : CONSULT Function (BCM - REAR DEFOGGER)

INFOID:0000000009287289

DATA MONITOR

Monitor Item [Unit]	Description
IGN ON SW [On/Off]	Indicates condition of ignition switch ON position.
ACC ON SW [On/Off]	Indicates condition of ignition switch ACC position.
REAR DEF SW [On/Off]	Indicates condition of rear window defogger switch.

ACTIVE TEST

Test Item	Description
REAR DEFOGGER	This test is able to check rear window defogger operation [Off/On].

DTC/CIRCUIT DIAGNOSIS

MANUAL A/C IDENTIFICATION TABLE

Application Table

INFOID:0000000008799669

Manual A/C Type	Description	Visual Identification
Manual A/C (Type 1)	Two Control Dial System [with variable blower control (VBC)]	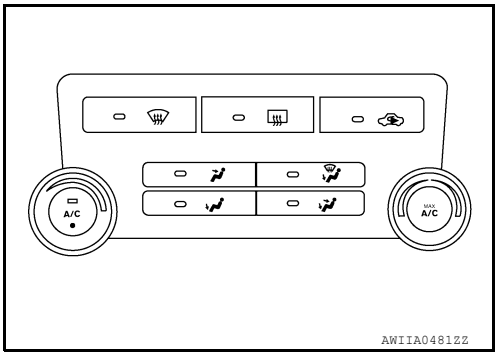
Manual A/C (Type 2)	Three Control Dial System [without variable blower control (VBC)]	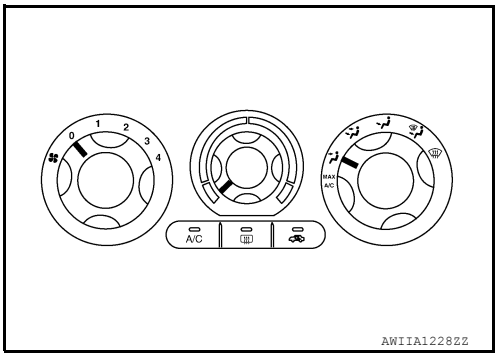

REAR WINDOW DEFOGGER SWITCH

Description

INFOID:0000000008799670

- The rear window defogger is operated by turning the rear window defogger switch ON.
- Turns the indicator lamp in the rear window defogger switch ON when operating the rear window defogger.

Component Function Check

INFOID:0000000008799671

1. CHECK REAR WINDOW DEFOGGER SWITCH FUNCTION

Check that the indicator lamp of rear window defogger illuminates with rear window defogger switch ON.

Is the inspection result normal?

YES >> Rear window defogger switch function is OK.
NO >> Refer to DEF-10, "Diagnosis Procedure Front Air Control (Type 1)" or DEF-10, "Diagnosis Procedure Front Air Control (Type 2)".

Diagnosis Procedure Front Air Control (Type 1)

INFOID:0000000008799672

Regarding Wiring diagram information, refer to DEF-30, "Wiring Diagram".

1. CHECK FRONT AIR CONTROL (REAR WINDOW DEFOGGER SWITCH) CIRCUIT

Operate the rear window defogger switch.

Is the inspection result normal?

YES >> Inspection End.
NO >> GO TO 2

2. CHECK HARNESS CONTINUITY

1. Turn ignition switch OFF.
2. Disconnect BCM and front air control.
3. Check continuity between BCM harness connector M19 terminal 41 and front air control harness connector M50 terminal 16.

BCM connector	Terminal	Front air control connector	Terminal	Continuity
M19	41	M50	16	Yes

4. Check continuity between BCM harness connector M19 terminal 41 and ground.

BCM connector	Terminal	Ground	Continuity
M19	41		No

Is the inspection result normal?

YES >> Replace front air control. Refer to VTL-7, "Removal and Installation".
NO >> Repair or replace harness.

Diagnosis Procedure Front Air Control (Type 2)

INFOID:0000000008799673

Regarding Wiring diagram information, refer to DEF-30, "Wiring Diagram".

1. CHECK FRONT AIR CONTROL (REAR WINDOW DEFOGGER SWITCH) CIRCUIT

Operate the rear window defogger switch.

Is the inspection result normal?

YES >> Inspection End.
NO >> GO TO 2

2. CHECK HARNESS CONTINUITY

1. Turn ignition switch OFF.
2. Disconnect BCM and front air control.
3. Check continuity between BCM harness connector M19 terminal 41 and front air control harness connector M49 terminal 11.

BCM connector	Terminal	Front air control connector	Terminal	Continuity
M19	41	M49	11	Yes

4. Check continuity between BCM harness connector M19 terminal 41 and ground.

BCM connector	Terminal	Ground	Continuity
M19	41		No

Is the inspection result normal?

YES >> Replace front air control. Refer to VTL-7, "Removal and Installation".
NO >> Repair or replace harness.

REAR WINDOW DEFOGGER RELAY

Description

INFOID:0000000008799674

Power is supplied to the rear window defogger with BCM control.

Component Function Check

INFOID:0000000008799675

1. CHECK REAR WINDOW DEFOGGER RELAY POWER SUPPLY CIRCUIT

Check that an operation noise of rear window defogger relay (located in IPDM E/R) can be heard when turning the rear window defogger switch ON.

Is the inspection result normal?

YES >> Rear window defogger relay power supply circuit is OK.
NO >> Refer to DEF-12, "Diagnosis Procedure".

Diagnosis Procedure

INFOID:0000000008799676

Regarding Wiring diagram information, refer to DEF-30, "Wiring Diagram".

1. CHECK FUSES

Check if any of the following fuses in the IPDM E/R are blown.

COMPONENT PARTS	AMPERE	FUSE NO.
IPDM E/R	15A	46
IPDM E/R	15A	47

Is the inspection result normal?

YES >> GO TO 2
NO >> If fuse is blown, be sure to eliminate cause of malfunction before installing new fuse.

2. CHECK REAR WINDOW DEFOGGER RELAY POWER SUPPLY CIRCUIT

1. Turn ignition switch ON.
2. Check voltage between IPDM E/R harness connector E124 terminal 60 and ground.

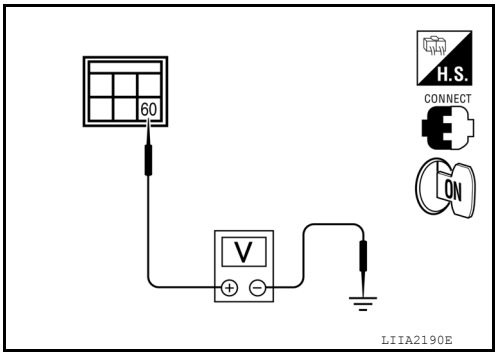

Terminals			Condition of rear window defogger switch	Voltage (V) (Approx.)
(+)		(–)		
IPDM E/R connector	Terminal			
E124	60	Ground	ON	Battery voltage
			OFF	0

Is the inspection result normal?

YES >> GO TO 3.
NO >> Replace IPDM E/R. Refer to PCS-28, "Removal and Installation".

3. CHECK INTERMITTENT INCIDENT

Check for intermittent incident.
Refer to GI-40, "Intermittent Incident".

Is the inspection result normal?

YES >> Check the following.
- Battery power supply circuit
- IPDM E/R

NO >> Repair or replace the malfunctioning parts.

REAR WINDOW DEFOGGER POWER SUPPLY AND GROUND CIRCUIT

Description

INFOID:0000000008799677

Heats the heating wire with the power supply from the rear window defogger relay to prevent the rear window from fogging up.

Component Function Check

INFOID:0000000008799678

1. CHECK REAR WINDOW DEFOGGER

Check that the heating wire of rear window defogger is heated when turning the rear window defogger switch ON.

Is the inspection result normal?

YES >> Rear window defogger is OK.
NO >> Refer to DEF-13, "Diagnosis Procedure".

Diagnosis Procedure

INFOID:0000000008799679

Regarding Wiring diagram information, refer to DEF-30, "Wiring Diagram".

1. CHECK POWER SUPPLY CIRCUIT

1. Turn ignition switch ON.
2. Check voltage between rear window defogger harness connector D651 terminal 1 and ground.

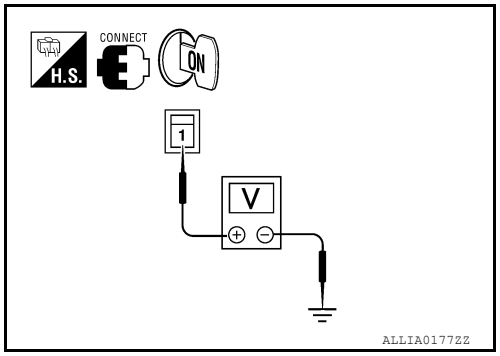

Terminals			Condition of rear window defogger switch	Voltage (V) (Approx.)
(+)		(–)		
Rear window defogger connector	Terminal			
D651	1	Ground	ON	Battery voltage
			OFF	0

Is the inspection result normal?

YES >> GO TO 2
NO >> GO TO 3

2. CHECK GROUND CIRCUIT

1. Turn ignition switch OFF.
2. Disconnect rear window defogger.
3. Check continuity between rear window defogger harness connector D604 terminal 2 and ground.

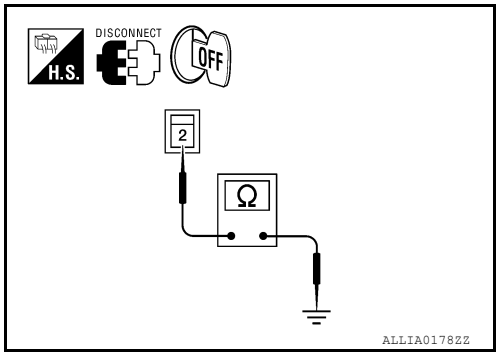

Rear window defogger connector	Terminal	Ground	Continuity
D604	2		Yes

Is the inspection result normal?

YES >> GO TO 4
NO >> Repair or replace harness.

3. CHECK HARNESS CONTINUITY

1. Disconnect IPDM E/R.
2. Check continuity between rear window defogger harness connector D651 (A) terminal 1 and IPDM E/R harness E124 (B) terminal 60 connector.

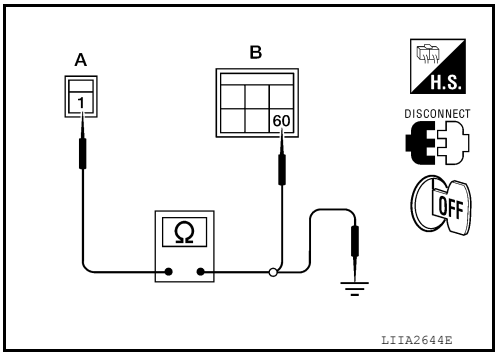

Rear window defogger connector	Terminal	IPDM E/R connector	Terminal	Continuity
D651 (A)	1	E124 (B)	60	Yes

3. Check continuity between rear window defogger harness connector D651 (A) terminal 1 and ground.

Rear window defogger connector	Terminal	Ground	Continuity
D651 (A)	1		No

Is the inspection result normal?

YES >> GO TO 5
NO >> Replace or repair harness as necessary.

4. CHECK FILAMENT

Check filament.
Refer to DEF-14, "Component Inspection".

Is the inspection result normal?

YES >> Check for intermittent incident. Refer to GI-40, "Intermittent Incident".
NO >> Repair filament. Refer to DEF-45, "Filament Repair".

5. CHECK INTERMITTENT INCIDENT

Check intermittent incident.
Refer to GI-40, "Intermittent Incident".

Is the inspection result normal?

YES >> Check the following.
- Battery power supply circuit
- IPDM E/R

NO >> Repair or replace the malfunctioning parts.

Component Inspection

INFOID:0000000008799680

1. CHECK FILAMENT

Check the filament for damage or open circuits.
Refer to DEF-45, "Filament Check".

Is the inspection result normal?

YES >> Inspection End.
NO >> Repair filament. Refer to DEF-45, "Filament Repair".

DOOR MIRROR DEFOGGER LH

Description

INFOID:0000000008799681

Heats the heating wire with the power supply from the heated mirror relay to prevent the door mirror from fogging up.

Component Function Check

INFOID:0000000008799682

1. CHECK DOOR MIRROR DEFOGGER LH

Check that heating wire of door mirror defogger LH is heated when turning the rear window defogger switch ON.

Is the inspection result normal?

YES >> Door mirror defogger LH is OK.
NO >> Refer to DEF-15, "Diagnosis Procedure".

Diagnosis Procedure

INFOID:0000000008799683

Regarding Wiring diagram information, refer to DEF-30, "Wiring Diagram".

1. CHECK POWER SUPPLY

Check if the following fuse in the IPDM E/R is blown.

COMPONENT PARTS	AMPERE	FUSE NO.
IPDM E/R	15A	43

Is the inspection result normal?

YES >> GO TO 2
NO >> If fuse is blown, be sure to eliminate cause of malfunction before installing new fuse.

2. CHECK DOOR MIRROR DEFOGGER POWER SUPPLY CIRCUIT

1. Turn ignition switch ON.
2. Check voltage between IPDM E/R harness connector E120 terminal 23 and ground.

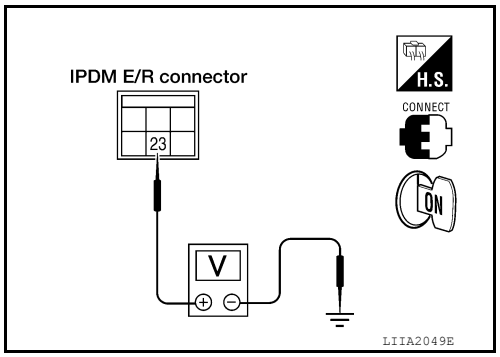

Connector	Terminal (+)	Terminal (-)	Condition	Voltage (V) (Approx.)
E120	23	Ground	Rear window defogger switch ON	Battery voltage
			Rear window defogger switch OFF	0

Is the inspection result normal?

YES >> GO TO 3
NO >> Replace IPDM E/R. Refer to PCS-28, "Removal and Installation".

3. CHECK DOOR MIRROR DEFOGGER LH POWER SUPPLY CIRCUIT

1. Turn ignition switch OFF.
2. Disconnect door mirror LH.
3. Turn ignition switch ON.
4. Check voltage between door mirror LH harness connector D4 terminal 1 and ground.

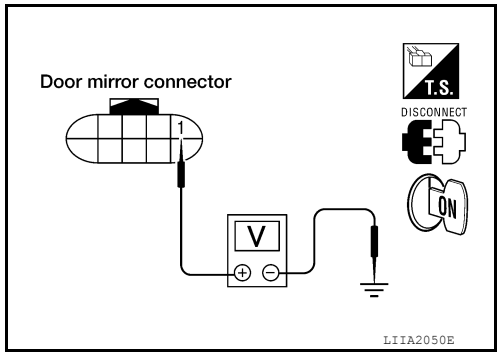

Connector	Terminal		Condition	Voltage (V) (Approx.)
	(+)	(-)		
D4	1	Ground	Rear window defogger switch ON	Battery voltage
			Rear window defogger switch OFF	0

Is the inspection result normal?

YES >> GO TO 4
NO >> Repair or replace harness.

4. CHECK DOOR MIRROR DEFOGGER LH CIRCUIT

1. Turn ignition switch OFF.
2. Disconnect IPDM E/R.
3. Check continuity between IPDM E/R harness connector E120 (A) terminal 23 and door mirror LH harness connector D4 (B) terminal 1.

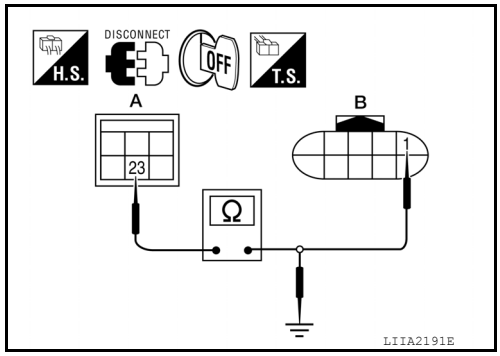

Connector	Terminal	Connector	Terminal	Continuity
A		B		
IPDM E/R: E120	23	Door mirror: D4	1	Yes

4. Check continuity between IPDM E/R harness connector E120 (A) terminal 23 and ground.

A		Ground	Continuity
Connector	Terminal		
IPDM E/R: E120	23		No

Is the inspection result normal?

YES >> GO TO 5.
NO >> Repair or replace harness.

5. CHECK DOOR MIRROR DEFOGGER LH GROUND CIRCUIT

Check continuity between door mirror LH harness connector D4 terminal 6 and ground.

6 - Ground : Continuity should exist.

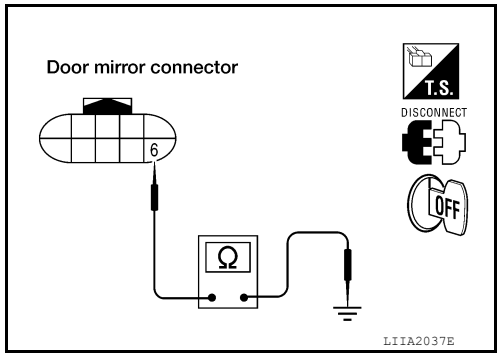

Is the inspection result normal?

YES >> GO TO 6
NO >> Repair or replace harness.

6. CHECK DOOR MIRROR DEFOGGER LH

Check door mirror defogger LH.
Refer to DEF-17, "Component Inspection".

Is the inspection result normal?

YES >> GO TO 7

NO >> Replace door mirror LH. Refer to MIR-14, "Door Mirror Assembly".

7. CHECK INTERMITTENT INCIDENT

Check intermittent incident.
Refer to GI-40, "Intermittent Incident".

Is the inspection result normal?

YES >> Check the following.
- Battery power supply circuit
- IPDM E/R

NO >> Repair or replace the malfunctioning parts.

Component Inspection

INFOID:0000000008799684

1. CHECK DOOR MIRROR DEFOGGER LH

Check continuity between door mirror LH terminals 1 and 6.

1 - 6 : Continuity should exist.

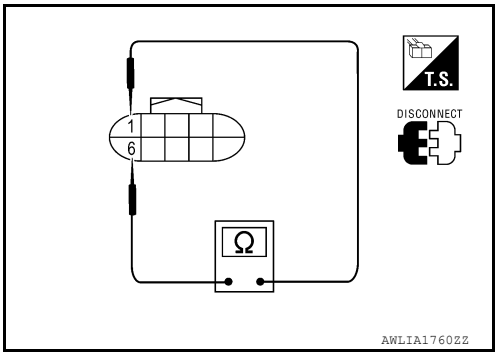

Is the inspection result normal?

YES >> Check the condition of the harness and the connector.

NO >> Replace malfunctioning door mirror LH. Refer to MIR-14, "Door Mirror Assembly".

DOOR MIRROR DEFOGGER RH

Description

INFOID:0000000008799685

Heats the heating wire with the power supply from the heated mirror relay to prevent the door mirror from fogging up.

Component Function Check

INFOID:0000000008799686

1. CHECK DOOR MIRROR DEFOGGER RH

Check that the heating wire of door mirror defogger RH is heated when turning the rear window defogger switch ON.

Is the inspection result normal?

YES >> Door mirror defogger RH is OK.
NO >> Refer to DEF-18, "Diagnosis Procedure".

Diagnosis Procedure

INFOID:0000000008799687

Regarding Wiring diagram information, refer to DEF-30, "Wiring Diagram".

1. CHECK POWER SUPPLY

Check if the following fuse in the IPDM E/R is blown.

COMPONENT PARTS	AMPERE	FUSE NO.
IPDM E/R	15A	43

Is the inspection result normal?

YES >> GO TO 2
NO >> If fuse is blown, be sure to eliminate cause of malfunction before installing new fuse.

2. CHECK DOOR MIRROR DEFOGGER POWER SUPPLY CIRCUIT

1. Turn ignition switch ON.
2. Check voltage between IPDM E/R harness connector E120 terminal 23 and ground.

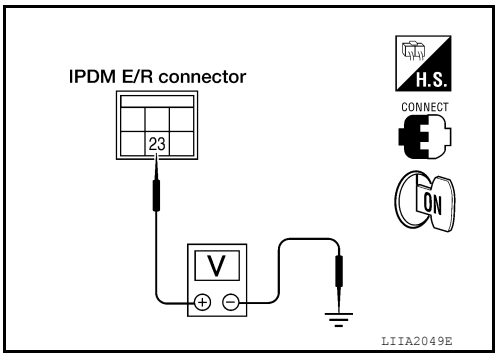

Connector	Terminal		Condition	Voltage (V) (Approx.)
	(+)	(-)		
E120	23	Ground	Rear window defogger switch ON	Battery voltage
			Rear window defogger switch OFF	0

Is the inspection result normal?

YES >> GO TO 3
NO >> Replace IPDM E/R. Refer to PCS-28, "Removal and Installation".

3. CHECK DOOR MIRROR DEFOGGER RH POWER SUPPLY CIRCUIT

1. Turn ignition switch OFF.
2. Disconnect door mirror RH.
3. Turn ignition switch ON.
4. Check voltage between door mirror RH harness connector D107 terminal 1 and ground.

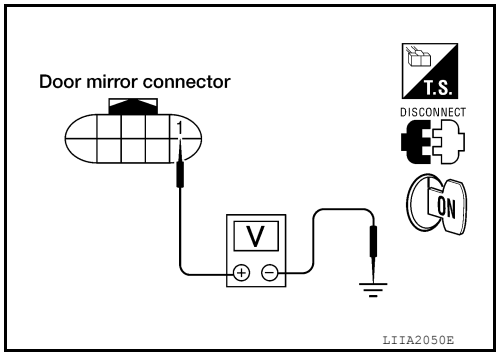

Connector	Terminal		Condition	Voltage (V) (Approx.)
	(+)	(-)		
D107	1	Ground	Rear window defogger switch ON	Battery voltage
			Rear window defogger switch OFF	0

Is the inspection result normal?

YES >> GO TO 4
NO >> Repair or replace harness.

4. CHECK DOOR MIRROR DEFOGGER RH CIRCUIT

1. Turn ignition switch OFF.
2. Disconnect IPDM E/R.
3. Check continuity between IPDM E/R harness connector E120 (A) terminal 23 and door mirror RH harness connector D107 (B) terminal 1.

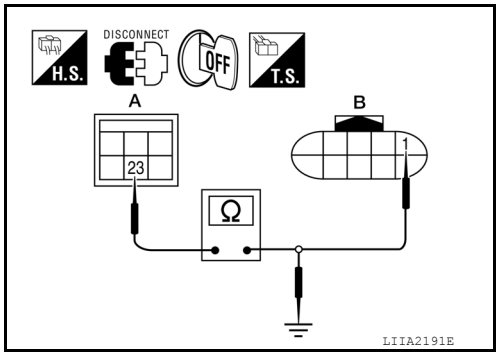

Connector	Terminal	Connector	Terminal	Continuity
A		B		
IPDM E/R: E120	23	Door mirror: D107	1	Yes

4. Check continuity between IPDM E/R harness connector D120 (A) terminal 23 and ground.

A		Ground	Continuity
Connector	Terminal		
IPDM E/R: E120	23		No

Is the inspection result normal?

YES >> GO TO 5.
NO >> Repair or replace harness.

5. CHECK DOOR MIRROR DEFOGGER RH GROUND CIRCUIT

Check continuity between door mirror RH harness connector D107 terminal 6 and ground.

6 - Ground : Continuity should exist.

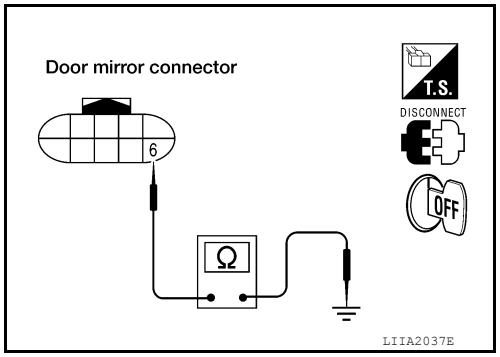

Is the inspection result normal?

YES >> GO TO 6
NO >> Repair or replace harness.

6. CHECK DOOR MIRROR DEFOGGER RH

Check door mirror defogger RH.
Refer to DEF-20, "Component Inspection".

Is the inspection result normal?

YES >> GO TO 7

NO >> Replace door mirror RH. Refer to MIR-14, "Door Mirror Assembly".

7. CHECK INTERMITTENT INCIDENT

Check intermittent incident.
Refer to GI-40, "Intermittent Incident".

Is the inspection result normal?

YES >> Check the following.
- Battery power supply circuit
- IPDM E/R

NO >> Repair or replace the malfunctioning parts.

Component Inspection

INFOID:0000000008799688

1. CHECK DOOR MIRROR DEFOGGER RH

Check continuity between door mirror RH terminals 1 and 6.

1 - 6 : Continuity should exist.

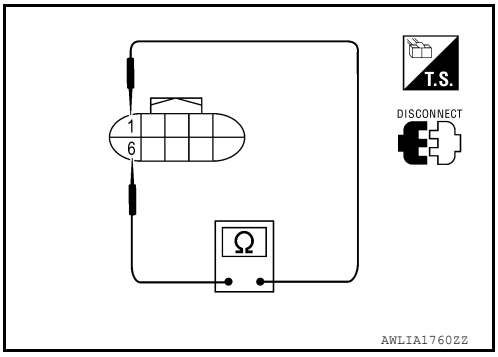

Is the inspection result normal?

YES >> Check the condition of the harness and the connector.

NO >> Replace malfunctioning door mirror RH. Refer to MIR-14, "Door Mirror Assembly".

ECU DIAGNOSIS INFORMATION

BCM (BODY CONTROL MODULE)

Reference Value

INFOID:0000000009287821

NOTE:
The Signal Tech II Tool (J-50190) can be used to perform the following functions. Refer to the Signal Tech II User Guide for additional information.
- Activate and display TPMS transmitter IDs
- Display tire pressure reported by the TPMS transmitter
- Read TPMS DTCs
- Register TPMS transmitter IDs

VALUES ON THE DIAGNOSIS TOOL

Monitor Item	Condition	Value/Status
ACC ON SW	Ignition switch OFF or ON	Off
	Ignition switch ACC	On
AIR COND SW	A/C switch OFF	Off
	A/C switch ON	On
AIR PRESS FL	Front left tire air pressure value	kPa, kg/cm^2, psi
AIR PRESS FR	Front right tire air pressure value	kPa, kg/cm^2, psi
AIR PRESS RL	Rear left tire air pressure value	kPa, kg/cm^2, psi
AIR PRESS RR	Rear right tire air pressure value	kPa, kg/cm^2, psi
AUTO LIGHT SW	Lighting switch OFF	Off
	Lighting switch AUTO	On
BACK DOOR SW	Back door closed	Off
	Back door opened	On
BRAKE SW	Brake pedal released	Off
	Brake pedal applied	On
BUCKLE SW	Seat belt buckle unfastened	Off
	Seat belt buckle fastened	On
BUZZER	Buzzer in combination meter OFF	Off
	Buzzer in combination meter ON	On
CARGO LAMP SW	Cargo lamp switch OFF	Off
	Cargo lamp switch ON	On
CDL LOCK SW	Door lock/unlock switch does not operate	Off
	Press door lock/unlock switch to the LOCK side	On
CDL UNLOCK SW	Door lock/unlock switch does not operate	Off
	Press door lock/unlock switch to the UNLOCK side	On
DOOR SW-AS	Front door RH closed	Off
	Front door RH opened	On
DOOR SW-DR	Front door LH closed	Off
	Front door LH opened	On
DOOR SW-RL	Rear door LH closed	Off
	Rear door LH opened	On
DOOR SW-RR	Rear door RH closed	Off
	Rear door RH opened	On

Monitor Item	Condition	Value/Status
FAN ON SIG	Blower motor fan switch OFF	Off
	Blower motor fan switch ON	On
FR FOG SW	Front fog lamp switch OFF	Off
	Front fog lamp switch ON	On
FR WASHER SW	Front washer switch OFF	Off
	Front washer switch ON	On
FR WIPER LOW	Front wiper switch OFF	Off
	Front wiper switch LO	On
FR WIPER HI	Front wiper switch OFF	Off
	Front wiper switch HI	On
FR WIPER INT	Front wiper switch OFF	Off
	Front wiper switch INT	On
FR WIPER STOP	Any position other than front wiper stop position	Off
	Front wiper stop position	On
HAZARD SW	When hazard switch is not pressed	Off
	When hazard switch is pressed	On
HEAD LAMP SW 1	Headlamp switch OFF	Off
	Headlamp switch 1st	On
HEAD LAMP SW 2	Headlamp switch OFF	Off
	Headlamp switch 1st	On
HI BEAM SW	High beam switch OFF	Off
	High beam switch HI	On
ID REGST FL1	ID registration of front left tire incomplete	YET
	ID registration of front left tire complete	DONE
ID REGST FR1	ID registration of front right tire incomplete	YET
	ID registration of front right tire complete	DONE
ID REGST RL1	ID registration of rear left tire incomplete	YET
	ID registration of rear left tire complete	DONE
ID REGST RR1	ID registration of rear right tire incomplete	YET
	ID registration of rear right tire complete	DONE
IGN ON SW	Ignition switch OFF or ACC	Off
	Ignition switch ON	On
IGN SW CAN	Ignition switch OFF or ACC	Off
	Ignition switch ON	On
INT VOLUME	Wiper intermittent dial is in a dial position 1 - 7	1 - 7
KEY CYL LK-SW	Door key cylinder LOCK position	Off
	Door key cylinder other than LOCK position	On
KEY CYL UN-SW	Door key cylinder UNLOCK position	Off
	Door key cylinder other than UNLOCK position	On
KEY ON SW	Mechanical key is removed from key cylinder	Off
	Mechanical key is inserted to key cylinder	On
KEYLESS LOCK	LOCK button of key fob is not pressed	Off
	LOCK button of key fob is pressed	On

Monitor Item	Condition	Value/Status
KEYLESS PANIC	PANIC button of key fob is not pressed	Off
	PANIC button of key fob is pressed	On
KEYLESS UNLOCK	UNLOCK button of key fob is not pressed	Off
	UNLOCK button of key fob is pressed	On
LIGHT SW 1ST	Lighting switch OFF	Off
	Lighting switch 1st	On
OIL PRESS SW	• Ignition switch OFF or ACC • Engine running	Off
	Ignition switch ON	On
OPTICAL SENSOR	Bright outside of the vehicle	Close to 5V
	Dark outside of the vehicle	Close to 0V
PASSING SW	Other than lighting switch PASS	Off
	Lighting switch PASS	On
REAR DEF SW	Rear window defogger switch OFF	Off
	Rear window defogger switch ON	On
RR WASHER SW	Rear washer switch OFF	Off
	Rear washer switch ON	On
RR WIPER INT	Rear wiper switch OFF	Off
	Rear wiper switch INT	On
RR WIPER ON	Rear wiper switch OFF	Off
	Rear wiper switch ON	On
RR WIPER STOP	Rear wiper stop position	Off
	Other than rear wiper stop position	On
TURN SIGNAL L	Turn signal switch OFF	Off
	Turn signal switch LH	On
TURN SIGNAL R	Turn signal switch OFF	Off
	Turn signal switch RH	On
VEHICLE SPEED	While driving	Equivalent to speedometer reading
WARNING LAMP	Low tire pressure warning lamp in combination meter OFF	Off
	Low tire pressure warning lamp in combination meter ON	On

Terminal Layout

INFOID:0000000009287822

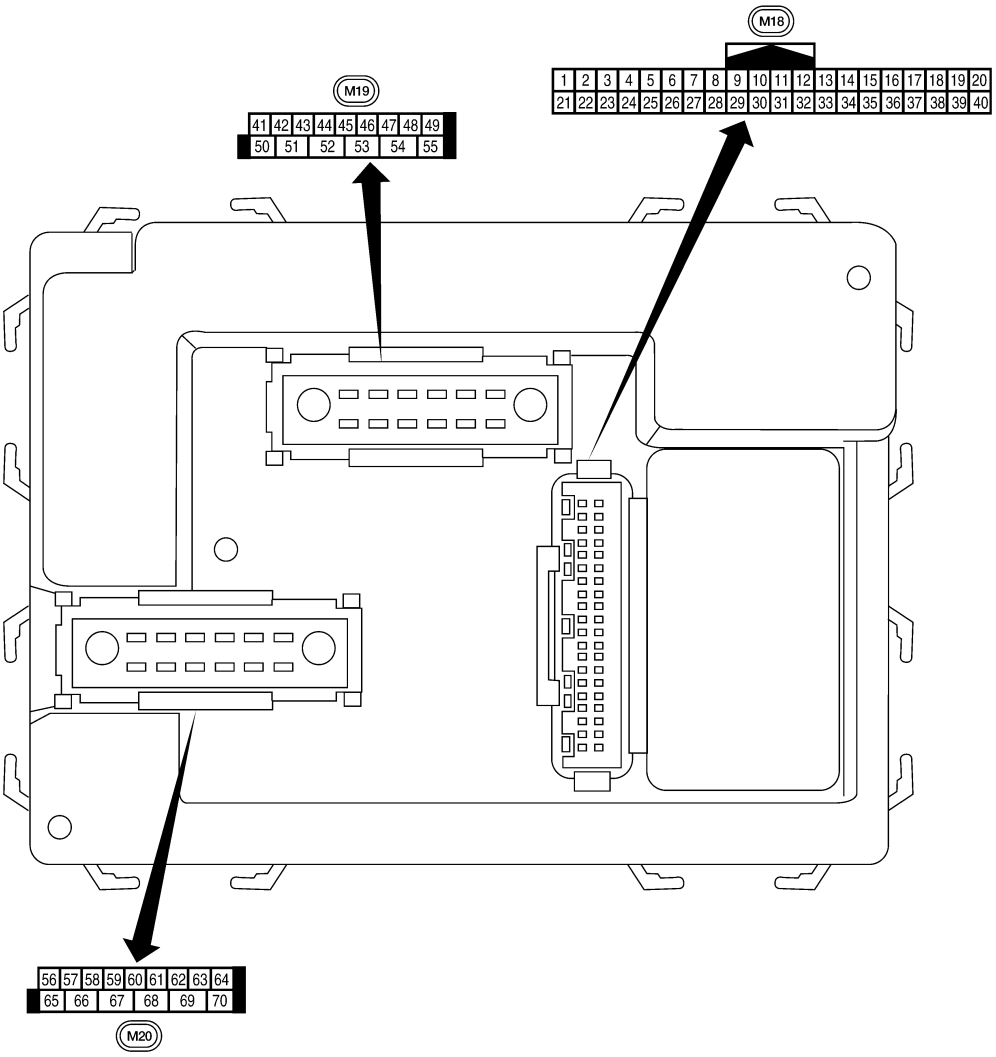

LIIA2443E

Physical Values

INFOID:0000000009287823

Terminal	Wire color	Signal name	Signal input/ output	Measuring condition		Reference value or waveform (Approx.)
				Ignition switch	Operation or condition	
1	BR	Ignition keyhole illumination	Output	OFF	Door is locked (SW OFF)	Battery voltage
					Door is unlocked (SW ON)	0V
2	P	Combination switch input 5	Input	ON	Lighting, turn, wiper OFF Wiper dial position 4	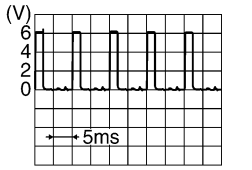
3	SB	Combination switch input 4	Input	ON	Lighting, turn, wiper OFF Wiper dial position 4	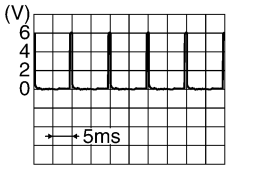
4	V	Combination switch input 3	Input	ON	Lighting, turn, wiper OFF Wiper dial position 4	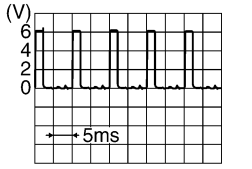
5	L	Combination switch input 2	Input	ON	Lighting, turn, wiper OFF Wiper dial position 4	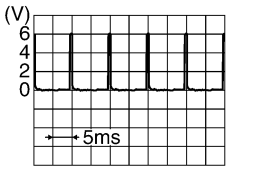
6	R	Combination switch input 1				
7	GR	Front door lock assembly LH (key cylinder switch) and back door key cylinder switch (unlock)	Input	OFF	ON (open, 2nd turn)	Momentary 1.5V
					OFF (closed)	0V
8	SB	Front door lock assembly LH (key cylinder switch) and back door key cylinder switch (lock)	Input	OFF	ON (open)	Momentary 1.5V
					OFF (closed)	0V
9	LG	Stop lamp switch	Input	OFF	Brake pedal depressed	Battery voltage
					Brake pedal released	0V
11	G/B	Ignition switch (ACC or ON)	Input	ACC or ON	Ignition switch ACC or ON	Battery voltage
12	LG	Front door switch RH	Input	OFF	ON (open)	0V
					OFF (closed)	Battery voltage
13	L	Rear door switch RH	Input	OFF	ON (open)	0V
					OFF (closed)	Battery voltage

Terminal	Wire color	Signal name	Signal input/ output	Measuring condition		Reference value or waveform (Approx.)
				Ignition switch	Operation or condition	
15	W	Tire pressure warning check connector	Input	OFF	—	5V
18	BR	Remote keyless entry receiver (ground)	Output	OFF	—	0V
19	V	Remote keyless entry receiver (power supply)	Output	OFF	Ignition switch OFF	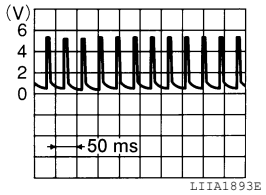
20	G	Remote keyless entry receiver (signal)	Input	OFF	Stand-by (keyfob buttons released)	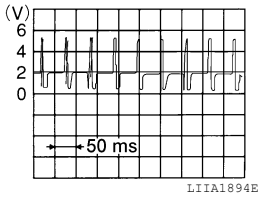
					When remote keyless entry receiver receives signal from keyfob (keyfob buttons pressed)	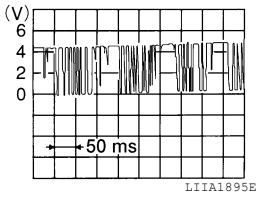
21	GR	NATS antenna amp.	Input	OFF → ON	Ignition switch (OFF → ON)	Just after turning ignition switch ON: Pointer of tester should move for approx. 1 second, then return to battery voltage.
23	G	Security indicator lamp	Output	OFF	Goes OFF → illuminates (Every 2.4 seconds)	Battery voltage → 0V
25	BR	NATS antenna amp.	Input	OFF → ON	Ignition switch (OFF → ON)	Just after turning ignition switch ON: Pointer of tester should move for approx. 1 second, then return to battery voltage.
27	W	Compressor ON signal	Input	ON	A/C switch OFF	5V
					A/C switch ON	0V
28	R	Front blower monitor	Input	ON	Front blower motor OFF	Battery voltage
					Front blower motor ON	0V
29	G	Hazard switch	Input	OFF	ON	0V
					OFF	5V
31	R	Off-road lamps switch	Input	ON	ON	0V
					OFF	5V

Terminal	Wire color	Signal name	Signal input/ output	Measuring condition		Reference value or waveform (Approx.)
				Ignition switch	Operation or condition	
32	O	Combination switch output 5	Output	ON	Lighting, turn, wiper OFF Wiper dial position 4	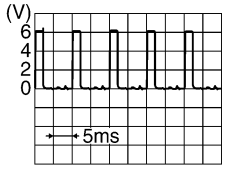
33	GR	Combination switch output 4	Output	ON	Lighting, turn, wiper OFF Wiper dial position 4	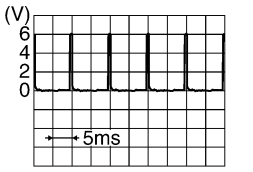
34	G	Combination switch output 3	Output	ON	Lighting, turn, wiper OFF Wiper dial position 4	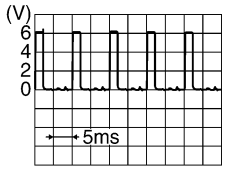
35	BR	Combination switch output 2	Output	ON	Lighting, turn, wiper OFF Wiper dial position 4	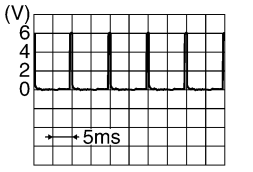
36	LG	Combination switch output 1				
37	B	Key switch and key lock solenoid	Input	OFF	Key inserted	Battery voltage
					Key removed	0V
38	W/R	Ignition switch (ON)	Input	ON	—	Battery voltage
39	L	CAN-H	—	—	—	—
40	P	CAN-L	—	—	—	—
41	Y	Rear window defogger switch	Input	ON	Rear window defogger switch ON	0V
					Rear window defogger switch OFF	5V
42	L	Off-road lamps	Output	ON	Off-road lamps switch: ON	0V
					Off-road lamps switch: OFF	Battery voltage
43	Y	Back door switch	Input	OFF	ON (open)	0V
					OFF (closed)	Battery voltage

Terminal	Wire color	Signal name	Signal input/ output	Measuring condition		Reference value or waveform (Approx.)
				Ignition switch	Operation or condition	
44	O	Rear wiper auto stop switch	Input	ON	Rise up position (rear wiper arm on stopper)	0V
					A Position (full clockwise stop position)	Battery voltage
					Forward sweep (counterclockwise direction)	Fluctuating
					B Position (full counterclockwise stop position)	0V
					Reverse sweep (clockwise direction)	Fluctuating
45	V	Lock switch	Input	OFF	ON (lock)	0V
					OFF	Battery voltage
46	LG	Unlock switch	Input	OFF	ON (unlock)	0V
					OFF	Battery voltage
47	GR	Front door switch LH	Input	OFF	ON (open)	0V
					OFF (closed)	Battery voltage
48	P	Rear door switch LH	Input	OFF	ON (open)	0V
					OFF (closed)	Battery voltage
49	L	Cargo lamp	Output	OFF	Any door open (ON)	0V
					All doors closed (OFF)	Battery voltage
50	W	Off-road lamps relay	Output	ON	Off-road lamps switch: ON	0V
					Off-road lamps switch: OFF	Battery voltage
51	O	Trailer turn signal (right)	Output	ON	Turn right ON	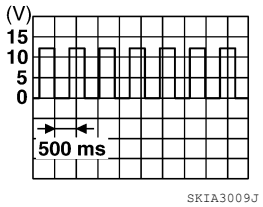
52	LG	Trailer turn signal (left)	Output	ON	Turn left ON	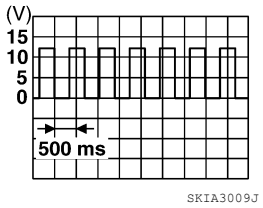
55	W	Rear wiper output circuit 1	Output	ON	OFF	0
					ON	Battery voltage
56	R/Y	Battery saver output	Output	OFF	10 minutes after ignition switch is turned OFF	0V
				ON	—	Battery voltage
57	R/Y	Battery power supply	Input	OFF	—	Battery voltage
58	W	Optical sensor	Input	ON	When optical sensor is illuminated	3.1V or more
					When optical sensor is not illuminated	0.6V or less

Terminal	Wire color	Signal name	Signal input/ output	Measuring condition			Reference value or waveform (Approx.)
				Ignition switch	Operation or condition		
59	GR	Front door lock assembly LH actuator (unlock)	Output	OFF	OFF (neutral)		0V
					ON (unlock)		Battery voltage
60	LG	Turn signal (left)	Output	ON	Turn left ON		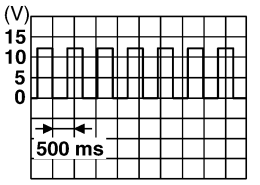 SKIA3009J
61	G	Turn signal (right)	Output	ON	Turn right ON		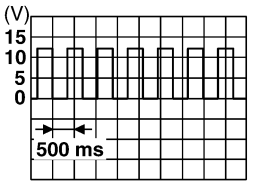 SKIA3009J
63	BR	Interior room/map lamp	Output	OFF	Any door switch	ON (open)	0V
						OFF (closed)	Battery voltage
65	V	All door lock actuators (lock)	Output	OFF	OFF (neutral)		0V
					ON (lock)		Battery voltage
66	L	Front door lock actuator RH, rear door lock actuators LH/RH and back door lock actuator (unlock)	Output	OFF	OFF (neutral)		0V
					ON (unlock)		Battery voltage
67	B	Ground	Input	ON	—		0V
68	O	Power window power supply (RAP)	Output	—	Ignition switch ON		Battery voltage
					Within 45 seconds after ignition switch OFF		Battery voltage
					More than 45 seconds after ignition switch OFF		0V
					When front door LH or RH is open or power window timer operates		0V
70	W	Battery power supply	Input	OFF	—		Battery voltage

WIRING DIAGRAM

REAR WINDOW DEFOGGER

Wiring Diagram

INFOID:0000000008799692

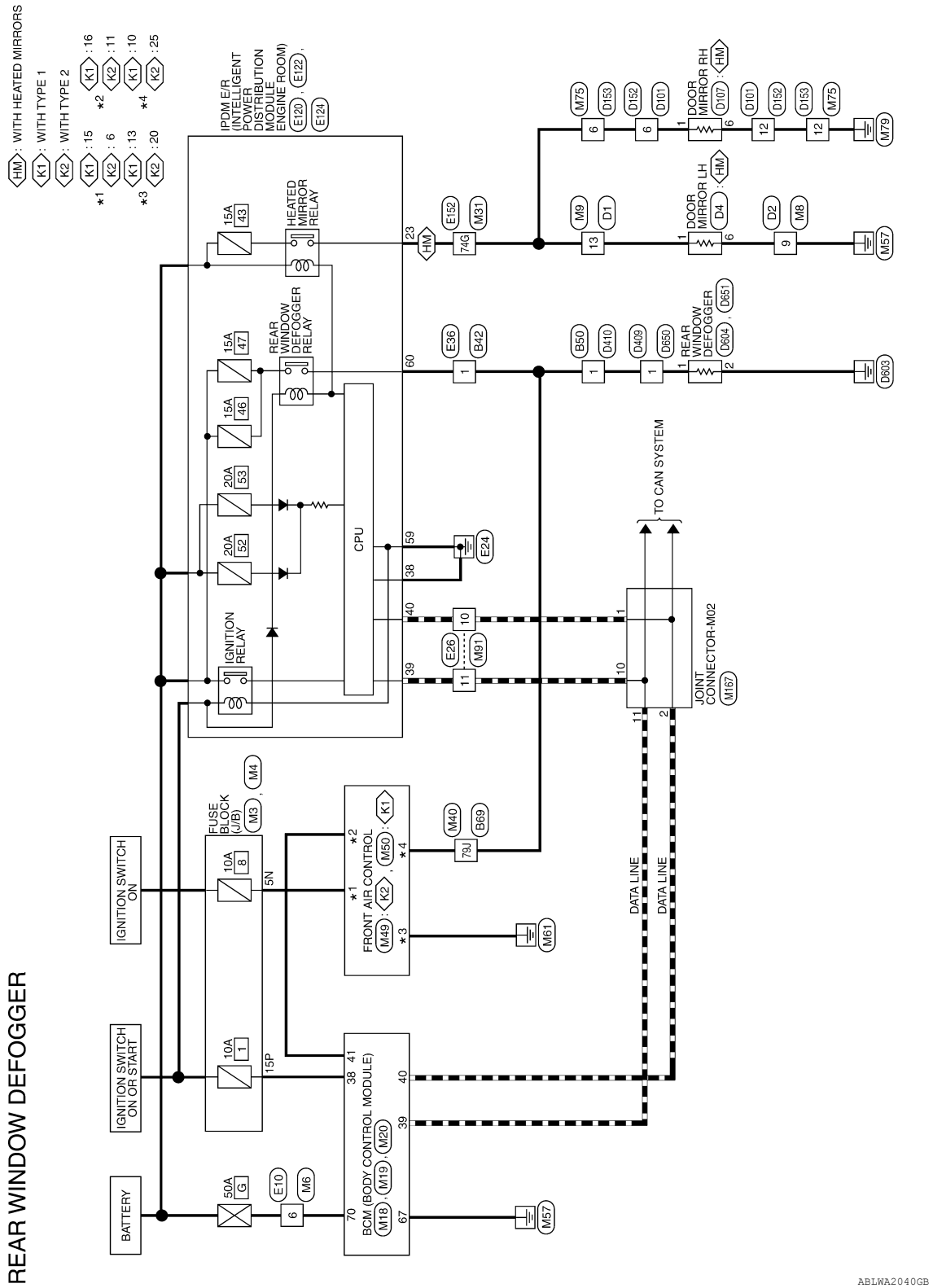

REAR WINDOW DEFOGGER CONNECTORS

Connector No.	M3
Connector Name	FUSE BLOCK (J/B)
Connector Color	WHITE

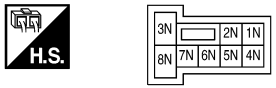

Terminal No.	Color of Wire	Signal Name
5N	W/G	–

Connector No.	M4
Connector Name	FUSE BLOCK (J/B)
Connector Color	WHITE

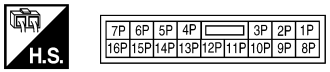

Terminal No.	Color of Wire	Signal Name
15P	W/R	–

Connector No.	M6
Connector Name	WIRE TO WIRE
Connector Color	WHITE

Terminal No.	Color of Wire	Signal Name
6	W	–

Connector No.	M8
Connector Name	WIRE TO WIRE
Connector Color	BROWN

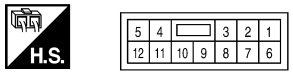

Terminal No.	Color of Wire	Signal Name
9	B	–

Connector No.	M9
Connector Name	WIRE TO WIRE
Connector Color	WHITE

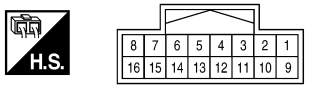

Terminal No.	Color of Wire	Signal Name
13	LG	–

Connector No.	M18
Connector Name	BCM (BODY CONTROL MODULE)
Connector Color	WHITE

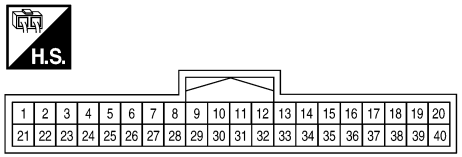

Terminal No.	Color of Wire	Signal Name
38	W/R	IGN SW
39	L	CAN-H
40	P	CAN-L

ABLIA4536GB

Connector No.	M19
Connector Name	BCM (BODY CONTROL MODULE)
Connector Color	WHITE

H.S.

41	42	43	44	45	46	47	48	49
50	51	52	53	54	55			

Terminal No.	Color of Wire	Signal Name
41	Y	REAR DEFOGGER SW

Connector No.	M20
Connector Name	BCM (BODY CONTROL MODULE)
Connector Color	BLACK

H.S.

56	57	58	59	60	61	62	63	64
65	66	67	68	69	70			

Terminal No.	Color of Wire	Signal Name
67	B	GND (POWER)
70	W	BAT (F/L)

Connector No.	M31
Connector Name	WIRE TO WIRE
Connector Color	WHITE

H.S.

5G	4G	3G	2G	1G
	10G	9G	8G	7G	6G
21G	20G	19G	18G	17G	16G	15G	14G	13G	12G	11G
	30G	29G	28G	27G	26G	25G	24G	23G	22G	
41G	40G	39G	38G	37G	36G	35G	34G	33G	32G	31G
	50G	49G	48G	47G	46G	45G	44G	43G	42G	
61G	60G	59G	58G	57G	56G	55G	54G	53G	52G	51G
	70G	69G	68G	67G	66G	65G	64G	63G	62G	
75G	74G	73G	72G	71G
	80G	79G	78G	77G	76G

Terminal No.	Color of Wire	Signal Name
74G	LG	–

Connector No.	M49
Connector Name	FRONT AIR CONTROL (WITH TYPE 2)
Connector Color	BLACK

H.S.

13	12	11	10	9	8	7	6	5	4	3	2	1
26	25	24	23	22	21	20	19	18	17	16	15	14

Terminal No.	Color of Wire	Signal Name
6	W/G	IGN
11	Y	REAR DEFOGGER REQUEST
20	B	GND
25	R	RR DEF STATUS

Terminal No.	Color of Wire	Signal Name
79J	R	–

Connector No.	M40
Connector Name	WIRE TO WIRE
Connector Color	WHITE

H.S.

5J	4J	3J	2J	1J
	10J	9J	8J	7J	6J
21J	20J	19J	18J	17J	16J	15J	14J	13J	12J	11J
	30J	29J	28J	27J	26J	25J	24J	23J	22J	
41J	40J	39J	38J	37J	36J	35J	34J	33J	32J	31J
	50J	49J	48J	47J	46J	45J	44J	43J	42J	
61J	60J	59J	58J	57J	56J	55J	54J	53J	52J	51J
	70J	69J	68J	67J	66J	65J	64J	63J	62J	
75J	74J	73J	72J	71J
	80J	79J	78J	77J	76J

ABLIA4537GB

Connector No.	M50
Connector Name	FRONT AIR CONTROL (WITH TYPE 1)
Connector Color	BLACK

H.S.

13	12	11	10	9	8	7	6	5	4	3	2	1
26	25	24	23	22	21	20	19	18	17	16	15	14

Terminal No.	Color of Wire	Signal Name
10	R	RR DEF STATUS
13	B	GND
15	W/G	IGN
16	Y	REAR DEFOGGER REQUEST

Connector No.	M75
Connector Name	WIRE TO WIRE
Connector Color	WHITE

H.S.

5	4		3	2	1
12	11	10	9	8	7	6

Terminal No.	Color of Wire	Signal Name
6	L	–
12	B	–

Connector No.	M91
Connector Name	WIRE TO WIRE
Connector Color	WHITE

H.S.

7	6	5	4		3	2	1
16	15	14	13	12	11	10	9	8

Terminal No.	Color of Wire	Signal Name
10	P	–
11	L	–

Connector No.	M167
Connector Name	JOINT CONNECTOR-M02
Connector Color	BLUE

H.S.

9	8	7	6	5	4	3	2	1
20	19	18	17	16	15	14	13	12	11	10

Terminal No.	Color of Wire	Signal Name
1	P	–
2	P	–
10	L	–
11	L	–

Connector No.	E10
Connector Name	WIRE TO WIRE
Connector Color	WHITE

H.S.

1	2	3
4	5	6

Terminal No.	Color of Wire	Signal Name
6	W	–

Connector No.	E26
Connector Name	WIRE TO WIRE
Connector Color	WHITE

H.S.

1	2	3		4	5	6	7
8	9	10	11	12	13	14	15	16

Terminal No.	Color of Wire	Signal Name
10	P	–
11	L	–

ABLIA4538GB

Connector No.	E36
Connector Name	WIRE TO WIRE
Connector Color	WHITE

H.S.

Terminal No.	Color of Wire	Signal Name
1	GR	–

Connector No.	E120
Connector Name	IPDM E/R (INTELLIGENT POWER DISTRIBUTION MODULE ENGINE ROOM)
Connector Color	WHITE

H.S.

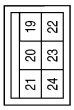

Terminal No.	Color of Wire	Signal Name
23	LG	HEATED MIRROR

Connector No.	E122
Connector Name	IPDM E/R (INTELLIGENT POWER DISTRIBUTION MODULE ENGINE ROOM)
Connector Color	WHITE

H.S.

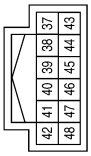

Terminal No.	Color of Wire	Signal Name
38	B	GND (SIGNAL)
39	L	CAN-H
40	P	CAN-L

Connector No.	E124
Connector Name	IPDM E/R (INTELLIGENT POWER DISTRIBUTION MODULE ENGINE ROOM)
Connector Color	BLACK

H.S.

Terminal No.	Color of Wire	Signal Name
59	B	GND (POWER)
60	GR	RR DEF

Connector No.	E152
Connector Name	WIRE TO WIRE
Connector Color	WHITE

H.S.

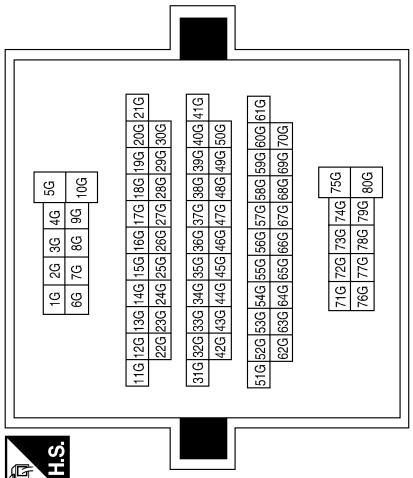

Terminal No.	Color of Wire	Signal Name
74G	LG	–

Connector No.	B42
Connector Name	WIRE TO WIRE
Connector Color	WHITE

H.S.

Terminal No.	Color of Wire	Signal Name
1	GR	–

ABLIA4539GB

Connector No.	B50
Connector Name	WIRE TO WIRE
Connector Color	WHITE

H.S.

Terminal No.	Color of Wire	Signal Name
1	GR	–

Connector No.	B69
Connector Name	WIRE TO WIRE
Connector Color	WHITE

H.S.

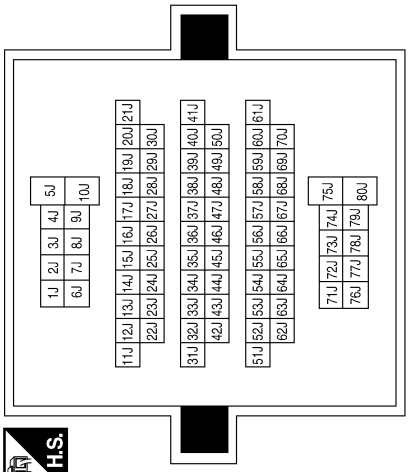

Terminal No.	Color of Wire	Signal Name
79J	R	–

Connector No.	D1
Connector Name	WIRE TO WIRE
Connector Color	WHITE

H.S.

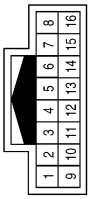

Terminal No.	Color of Wire	Signal Name
13	L/B	–

Connector No.	D2
Connector Name	WIRE TO WIRE
Connector Color	BROWN

H.S.

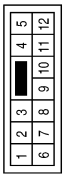

Terminal No.	Color of Wire	Signal Name
9	B	–

Connector No.	D4
Connector Name	DOOR MIRROR LH (WITH HEATED MIRRORS)
Connector Color	BLACK

H.S.

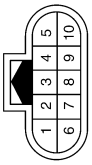

Terminal No.	Color of Wire	Signal Name
1	L/B	–
6	B	–

Connector No.	D101
Connector Name	WIRE TO WIRE
Connector Color	WHITE

H.S.

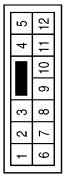

Terminal No.	Color of Wire	Signal Name
6	L/B	–
12	B	–

ABLIA4542GB

Connector No.	D107
Connector Name	DOOR MIRROR RH (WITH HEATED MIRRORS)
Connector Color	BLACK

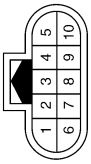

Terminal No.	Color of Wire	Signal Name
1	L/B	–
6	B	–

Connector No.	D152
Connector Name	WIRE TO WIRE
Connector Color	WHITE

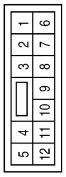

Terminal No.	Color of Wire	Signal Name
6	L	–
12	B	–

Connector No.	D153
Connector Name	WIRE TO WIRE
Connector Color	WHITE

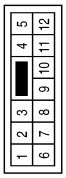

Terminal No.	Color of Wire	Signal Name
6	L	–
12	B	–

Connector No.	D409
Connector Name	WIRE TO WIRE
Connector Color	WHITE

Terminal No.	Color of Wire	Signal Name
1	GR	–

Connector No.	D410
Connector Name	WIRE TO WIRE
Connector Color	WHITE

Terminal No.	Color of Wire	Signal Name
1	GR	–

Connector No.	D604
Connector Name	REAR WINDOW DEFOGGER
Connector Color	BLACK

Terminal No.	Color of Wire	Signal Name
2	B	–

ABLIA4540GB

Connector No.	D650
Connector Name	WIRE TO WIRE
Connector Color	WHITE

Terminal No.	Color of Wire	Signal Name
1	GR	–

Connector No.	D651
Connector Name	REAR WINDOW DEFOGGER
Connector Color	BLACK

Terminal No.	Color of Wire	Signal Name
1	GR	–

ABLIA4541GB

SYMPTOM DIAGNOSIS

REAR WINDOW DEFOGGER AND DOOR MIRROR DEFOGGER DO NOT OPERATE.

Diagnosis Procedure

INFOID:0000000008799693

1. CHECK REAR WINDOW DEFOGGER SWITCH

Check rear window defogger switch.
Refer to DEF-10, "Component Function Check".

Is the inspection result normal?

YES >> GO TO 2
NO >> Repair or replace the malfunctioning parts.

2. CHECK REAR WINDOW DEFOGGER RELAY

Check rear window defogger relay.
Refer to DEF-12, "Component Function Check".

Is the inspection result normal?

YES >> GO TO 3
NO >> Repair or replace the malfunctioning parts.

3. CHECK REAR WINDOW DEFOGGER POWER SUPPLY AND GROUND CIRCUIT

Check rear window defogger power supply and ground circuit.
Refer to DEF-13, "Component Function Check".

Is the inspection result normal?

YES >> GO TO 4
NO >> Repair or replace the malfunctioning parts.

4. CHECK BOTH DOOR MIRROR DEFOGGER

1. Check door mirror LH. Refer to DEF-15, "Component Function Check".
2. Check door mirror RH. Refer to DEF-18, "Component Function Check".

Is the inspection result normal?

YES >> Check intermittent incident. Refer to GI-40, "Intermittent Incident".
NO >> Repair or replace the malfunctioning parts.

REAR WINDOW DEFOGGER DOES NOT OPERATE BUT BOTH OF DOOR MIRROR DEFOGGER OPERATE.

Diagnosis Procedure

INFOID:0000000008799694

1. CHECK REAR WINDOW DEFOGGER POWER SUPPLY AND GROUND CIRCUIT

Check rear window defogger power supply and ground circuit.
Refer to DEF-13, "Component Function Check".

Is the inspection result normal?

YES >> Check for intermittent incident. Refer to GI-40, "Intermittent Incident".
NO >> Repair or replace the malfunctioning parts.

BOTH DOORS MIRROR DEFOGGER DON'T OPERATE BUT REAR WINDOW DEFOGGER OPERATES

Diagnosis Procedure

INFOID:0000000008799695

1. CHECK BOTH DOOR MIRROR DEFOGGER

1. Check door mirror LH. Refer to DEF-15, "Component Function Check".
2. Check door mirror RH. Refer to DEF-18, "Component Function Check".

Is the inspection result normal?

YES >> Check intermittent incident. Refer to GI-40, "Intermittent Incident".
NO >> Repair or replace the malfunctioning parts.

DRIVER SIDE DOOR MIRROR DEFOGGER DOES NOT OPERATE.

Diagnosis Procedure

INFOID:0000000008799696

1. CHECK DOOR MIRROR DEFOGGER LH

Check door mirror defogger LH.
Refer to DEF-15, "Component Function Check".

Is the inspection result normal?

YES >> Check for intermittent incident. Refer to GI-40, "Intermittent Incident".
NO >> Repair or replace the malfunctioning parts.

PASSENGER SIDE DOOR MIRROR DEFOGGER DOES NOT OPERATE.

Diagnosis Procedure

INFOID:0000000008799697

1. CHECK DOOR MIRROR DEFOGGER RH

Check door mirror defogger RH.
Refer to DEF-18, "Component Function Check".

Is the inspection result normal?

YES >> Check for intermittent incident. Refer to GI-40, "Intermittent Incident".
NO >> Repair or replace the malfunctioning parts.

REAR WINDOW DEFOGGER SWITCH DOES NOT LIGHT, BUT REAR WINDOW DEFOGGER OPERATES

Diagnosis Procedure

INFOID:0000000008799698

1. CHECK REAR WINDOW DEFOGGER SWITCH

Check that the rear window defogger switch is operating normally.

Is the inspection result normal?

YES >> Check for intermittent incident. Refer to GI-40, "Intermittent Incident".

NO >> Check rear window defogger switch. Refer to DEF-10, "Diagnosis Procedure Front Air Control (Type 1)" or DEF-10, "Diagnosis Procedure Front Air Control (Type 2)".

PRECAUTION

PRECAUTIONS

Precaution for Supplemental Restraint System (SRS) "AIR BAG" and "SEAT BELT PRE-TENSIONER"

INFOID:0000000008799699

The Supplemental Restraint System such as “AIR BAG” and “SEAT BELT PRE-TENSIONER”, used along with a front seat belt, helps to reduce the risk or severity of injury to the driver and front passenger for certain types of collision. This system includes seat belt switch inputs and dual stage front air bag modules. The SRS system uses the seat belt switches to determine the front air bag deployment, and may only deploy one front air bag, depending on the severity of a collision and whether the front occupants are belted or unbelted.
Information necessary to service the system safely is included in the SR and SB section of this Service Manual.

WARNING:

- **To avoid rendering the SRS inoperative, which could increase the risk of personal injury or death in the event of a collision which would result in air bag inflation, all maintenance must be performed by an authorized NISSAN/INFINITI dealer.**
- **Improper maintenance, including incorrect removal and installation of the SRS, can lead to personal injury caused by unintentional activation of the system. For removal of Spiral Cable and Air Bag Module, see the SR section.**
- **Do not use electrical test equipment on any circuit related to the SRS unless instructed to in this Service Manual. SRS wiring harnesses can be identified by yellow and/or orange harnesses or harness connectors.**

PRECAUTIONS WHEN USING POWER TOOLS (AIR OR ELECTRIC) AND HAMMERS

WARNING:

- **When working near the Airbag Diagnosis Sensor Unit or other Airbag System sensors with the Ignition ON or engine running, DO NOT use air or electric power tools or strike near the sensor(s) with a hammer. Heavy vibration could activate the sensor(s) and deploy the air bag(s), possibly causing serious injury.**
- **When using air or electric power tools or hammers, always switch the Ignition OFF, disconnect the battery, and wait at least 3 minutes before performing any service.**

Handling for Adhesive and Primer

INFOID:0000000008799700

- Do not use an adhesive which is past its usable date. Shelf life of this product is limited to six months after the date of manufacture. Carefully adhere to the expiration or manufacture date printed on the box.
- Keep primers and adhesive in a cool, dry place. Ideally, they should be stored in a refrigerator.
- Open the seal of the primer and adhesive just before application. Discard the remainder.
- Before application, be sure to shake the primer container to stir the contents. If any floating material is found, do not use it.
- If any primer or adhesive contacts the skin, wipe it off with gasoline or equivalent and wash the skin with soap.
- When using primer and adhesive, always observe the precautions in the instruction manual.

REMOVAL AND INSTALLATION

REAR WINDOW DEFOGGER

Filament Check

INFOID:0000000008799701

1. When measuring voltage, wrap tin foil around the top of the negative probe. Then press the foil against the wire with your finger.

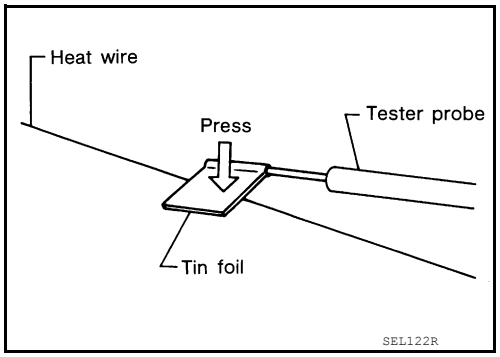

2. Attach probe circuit tester (in Volt range) to middle portion of each filament.

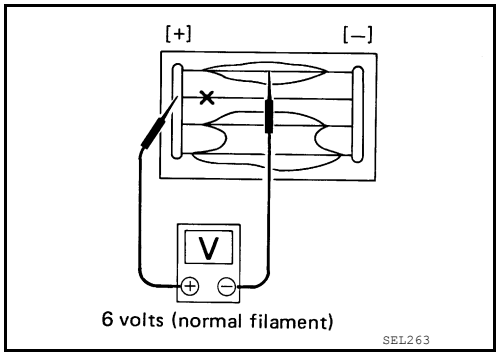

3. If a filament is burned out, circuit tester registers 0 or battery voltage.
4. To locate burned out point, move probe to left and right along filament. Test needle will swing abruptly when probe passes the point.

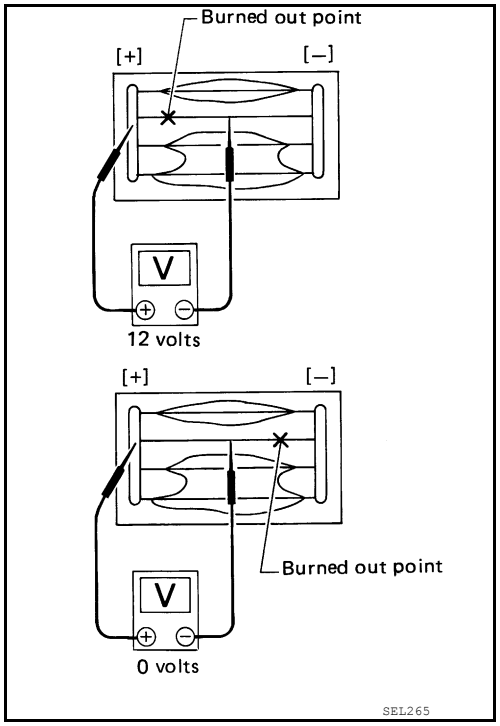

Filament Repair

INFOID:0000000008799702

REPAIR EQUIPMENT

- Conductive silver composition (DuPont No. 4817 or equivalent)
- Ruler 30 cm (11.8 in) long

- Drawing pen
- Heat gun
- Alcohol
- Cloth

REPAIRING PROCEDURE

1. Wipe broken heat wire and its surrounding area clean with a cloth dampened in alcohol.
2. Apply a small amount of conductive silver composition to tip of drawing pen.
   NOTE:
   Shake silver composition container before use.
3. Place ruler on glass along broken line. Deposit conductive silver composition on break with drawing pen. Slightly overlap existing heat wire on both sides [preferably 5 mm (0.20 in)] of the break.

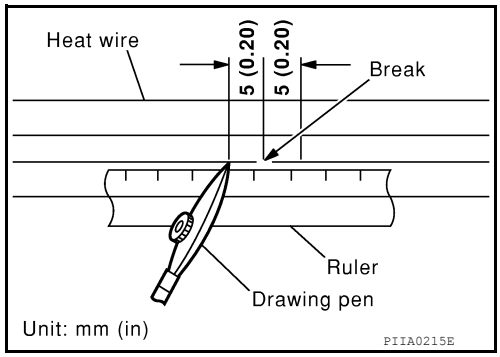

4. After repair has been completed, check repaired wire for continuity. This check should be conducted 10 minutes after silver composition is deposited.
   CAUTION:
   Do not touch repaired area while test is being conducted.

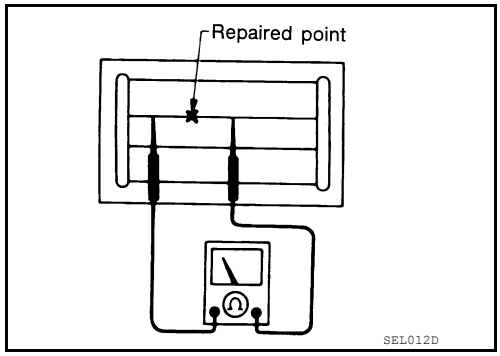
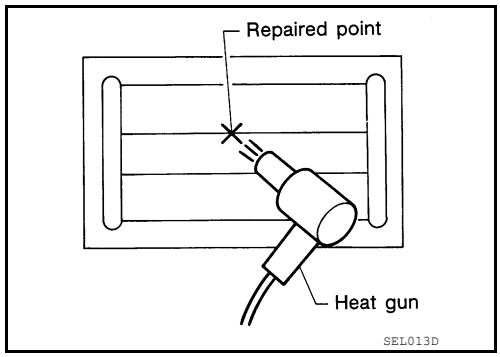
5. Apply a constant stream of hot air directly to the repaired area for approximately 20 minutes with a heat gun. A minimum distance of 3 cm (1.2 in) should be kept between repaired area and hot air outlet.
   NOTE:
   If a heat gun is not available, let the repaired area dry for 24 hours.